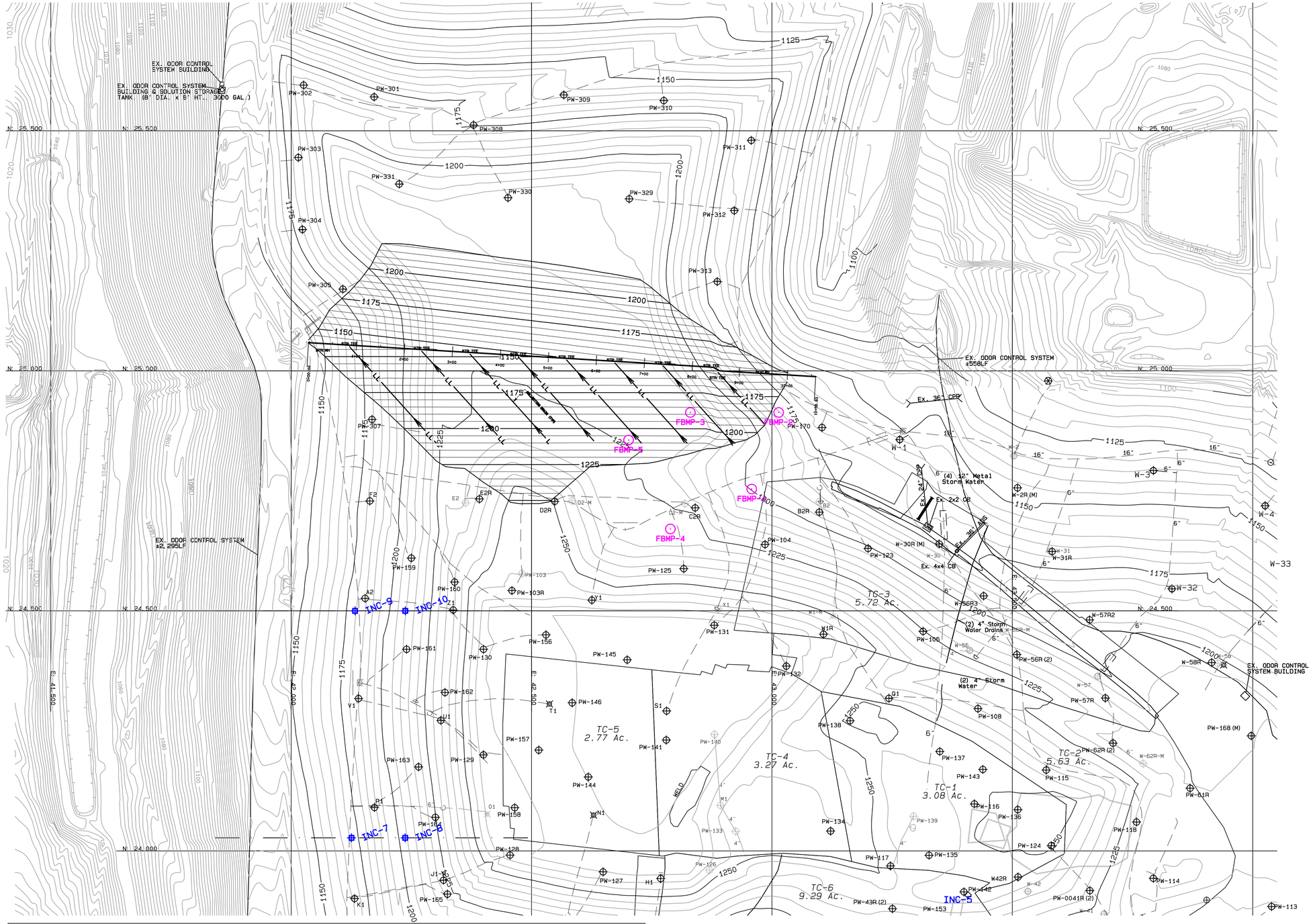


## LEGEND

| | | | |
|---|---|---|---|
| PW-159 | ABANDONED PIEZOMETER | STR TEE | TEE FITTING |
| PW-159 | PIEZOMETER | 1100 | EXISTING CONTOUR |
| INC-7 | INCLINOMETER | | EXISTING 6/07 SITE CONTOUR (MINOR) |
| FBMP-5 | IN SITU TEMP. MONITORING POINT | 1100 | EXISTING 6/07 SITE CONTOUR (MAJOR) |
| | CROSS SECTION LOCATION | | ISOLATION BREAK CONTOUR (MINOR) |
| LL | COLLECTION DRAIN | 1100 | ISOLATION BREAK CONTOUR (MAJOR) |
| | | | AS BUILT GAS LINE |

NOTE:
EXCAVATION GRADING SHOWN IS SURFACE FOLLOWING COMPLETION OF THE EXCAVATION AND PLACEMENT OF COVER

GRAPHIC SCALE 1"=100'
0 100 200 300

REPUBLIC SERVICES OF OHIO II

| REVISION | DATE |
|---|---|
| 1 | |
| 2 | |
| 3 | |
| 4 | |
| 5 | |

P. J. CAREY & ASSOCIATES, P.C.
5879 VALINE WAY, SUGAR HILL, GA. 30518

PROJ. NO.:
DATE: 10/27/2007
DESIGNED BY:
DRAWN BY:
CHECKED BY: PAUCLNT 6
APPROVED BY: PAUCLNT 7

EXCAVATION AREA OVERVIEW

COUNTYWIDE RDF
ISOLATION BARRIER CELLS 5-7

FIGURE
4

Project Desc.: Prototype Drawing for 24 x 36 Sheet Path: N:\CountywideVFGO Confidential\18\DRAWINGS\10-24-07IB_rev3.pro Plot Date/Time: Sat Oct 27, 2007 / 11:26:56

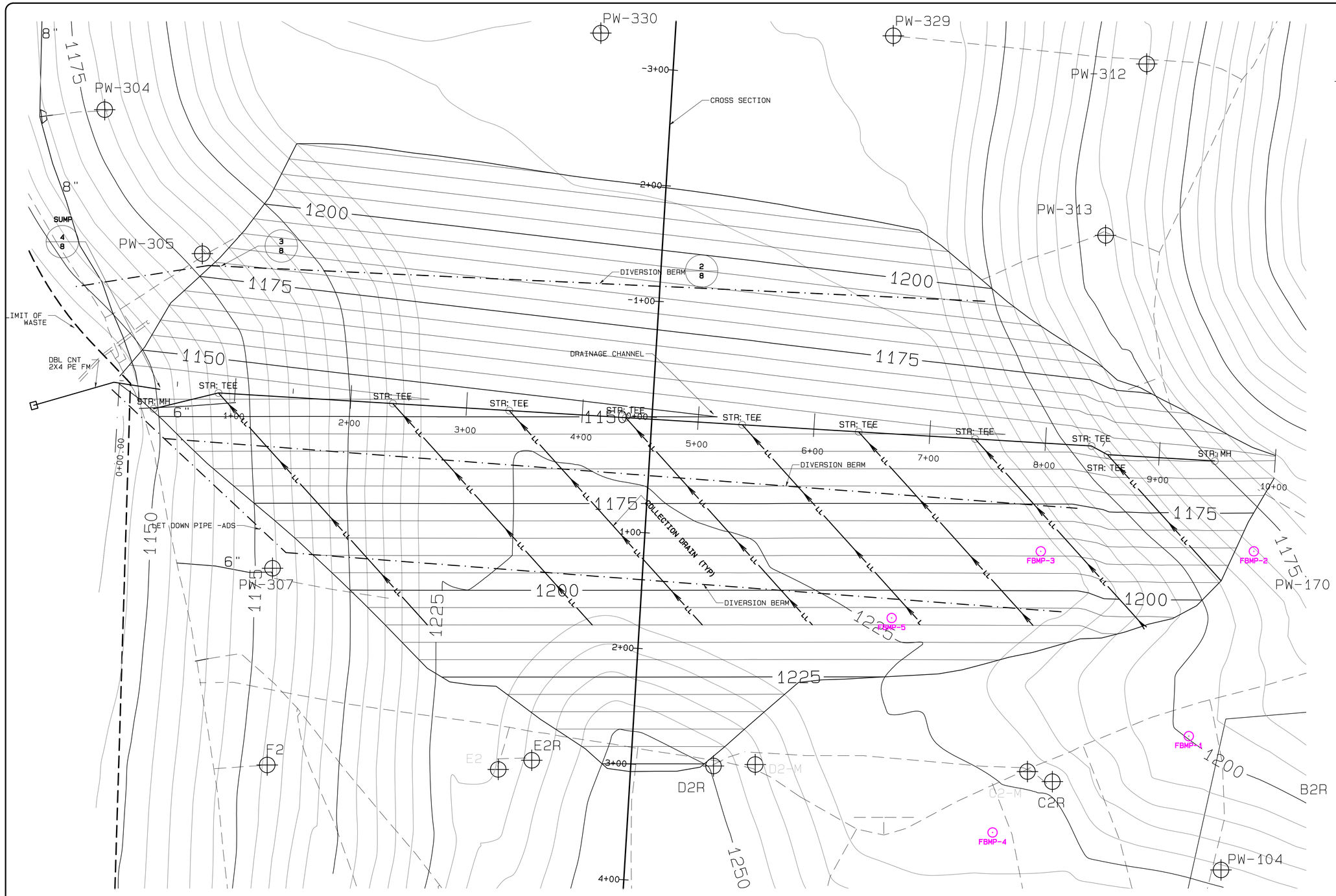


## LEGEND

| | | | |
|---|---|---|---|
| PW-159 | ABANDONED PIEZOMETER | STR: TEE | TEE FITTING |
| PW-159 | PIEZOMETER | 1100 | EXISTING CONTOUR |
| INC-7 | INCLINOMETER | | EXISTING 6/07 SITE CONTOUR (MINOR) |
| FBMP-5 | IN SITU TEMP. MONITORING POINT | 1100 | EXISTING 6/07 SITE CONTOUR (MAJOR) |
| | CROSS SECTION LOCATION | | ISOLATION BREAK CONTOUR (MINOR) |
| LL | COLLECTION DRAIN | 1100 | ISOLATION BREAK CONTOUR (MAJOR) |
| | | | AS BUILT GAS LINE |

GRAPHIC SCALE 1"=40'

0 40 80 120

REPUBLIC SERVICES OF OHIO II

| REVISION | DATE |
|---|---|
| 1 | |
| 2 | |
| 3 | |
| 4 | |
| 5 | |

P. J. CAREY & ASSOCIATES, P.C.

5878 VALINE WAY, SUGAR HILL, GA. 30518

PROJ. NO.:
DATE: 10/27/2007
DESIGNED BY:
DRAWN BY:
CHECKED BY: PRJCLNT 6
APPROVED BY: PRJCLNT 7

EXCAVATION PLAN

COUNTYWIDE RDF

ISOLATION BARRIER CELLS 5-7

FIGURE

5

Project Desc.: Prototype Drawing for 24 x 36 Sheet Path: N:\Countywide\F&O Confidential\IB\DRAWINGS\10-24-07IB_rev3.pro Plot Date/Time: Sat Oct 27, 2007 / 11:16:10

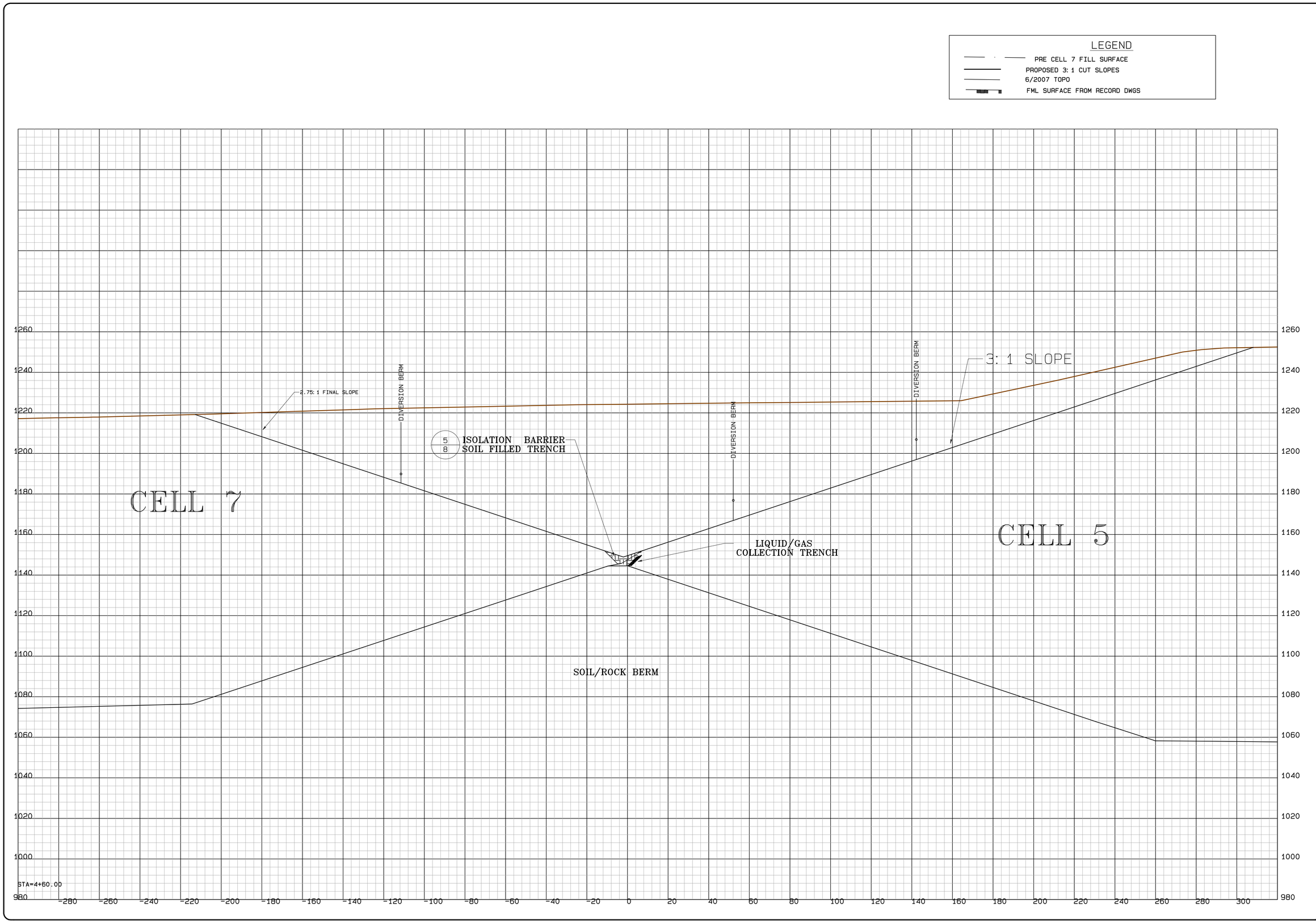


REPUBLIC SERVICES OF OHIO II

| REVISION | DATE |
|---|---|
| 1 | |
| 2 | |
| 3 | |
| 4 | |
| 5 | |

P. J. CAREY & ASSOCIATES, P.C.
5879 VALINE WAY, SUGAR HILL, GA. 30518

PROJ. NO.:
DATE: 10/27/2007
DESIGNED BY:
DRAWN BY:
CHECKED BY: PAJCLNT 6
APPROVED BY: PAJCLNT 7

EXCAVATION CROSS SECTION

COUNTYWIDE RDF
ISOLATION BARRIER CELLS 5-7

FIGURE
6

Project Desc.: Prototype Drawing for 24 x 36 Sheet Path: N:\CountywideVFSD Confidential\IB\DRAWINGS\10-24-07IB_rev3.pro Plot Date/Time: Sat Oct 27, 2007 / 11:15:49

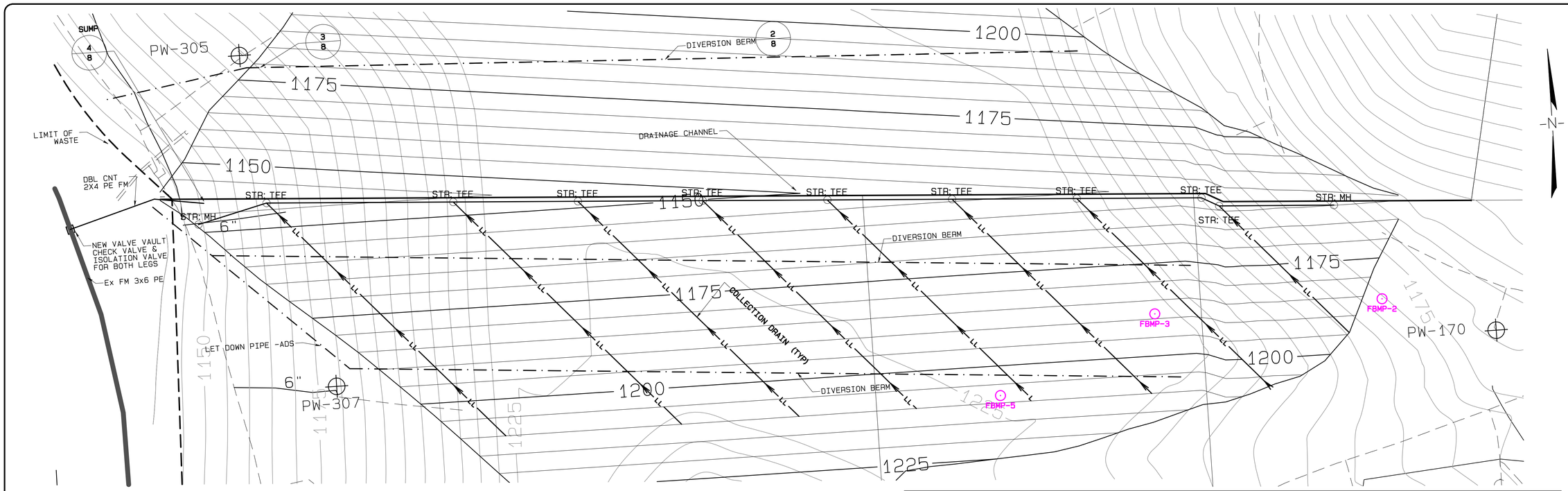


## PLAN VIEW

Scale: 1" = 40'

## ISOLATION BARRIER ALIGNMENT

NOTES:
1) ALIGNMENT SHOWN IS SOUTH EDGE OF CREST IN BASELINER
2) SEE DETAIL SHEETS FOR PIPE, TRENCH AND SUMP DETAILS
3) PUMPING FROM SUMP TO BE CONNECTED TO EXISTING FORCE MAIN USING DOUBLE CONTAINED PE PIPE

LEGEND

| | | | |
|---|---|---|---|
| PW-159 | ABANDONED PIEZOMETER | STR: TEE | TEE FITTING |
| PW-159 | PIEZOMETER | 1100 | EXISTING CONTOUR |
| INC-7 | INCLINOMETER | | EXISTING 6/07 SITE CONTOUR (MINOR) |
| FBMP-5 | IN SITU TEMP. MONITORING POINT | 1100 | EXISTING 6/07 SITE CONTOUR (MAJOR) |
| | CROSS SECTION LOCATION | | ISOLATION BREAK CONTOUR (MINOR) |
| LL | COLLECTION DRAIN | 1100 | ISOLATION BREAK CONTOUR (MAJOR) |
| | | | AS BUILT GAS LINE |

LEGEND

- PRE CELL 7 FILL SURFACE
- PROPOSED 3:1 CUT SLOPES
- 6/2007 TOPO
- FML SURFACE FROM RECORD DWGS

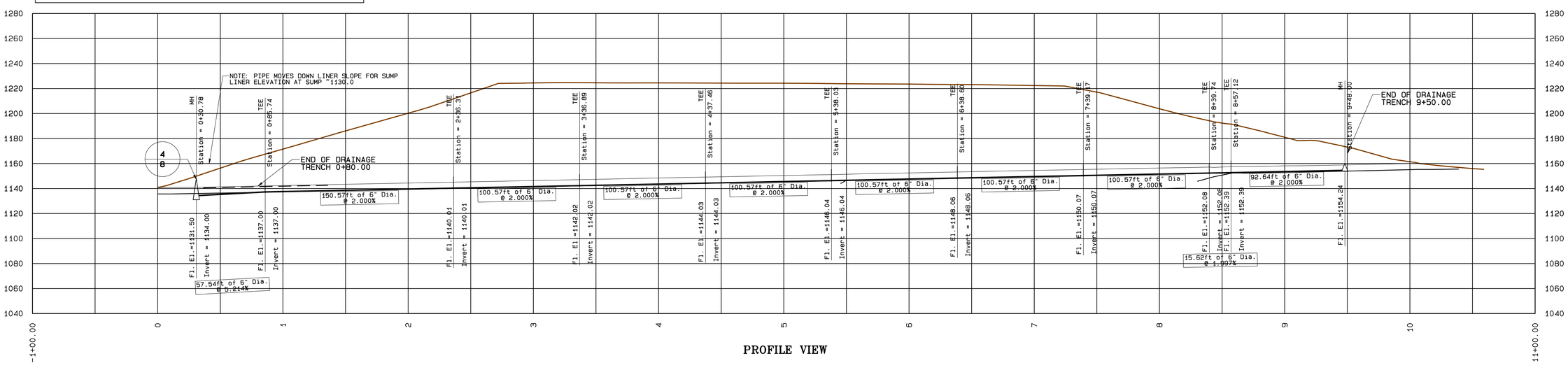


## PROFILE VIEW

Vert. Scale: 1" = 40'

REPUBLIC SERVICES OF OHIO II

| REVISION | DATE |
|---|---|
| 1 | |
| 2 | |
| 3 | |
| 4 | |
| 5 | |

P. J. CAREY & ASSOCIATES, P.C.
5979 VALNE WAY, SUGAR HILL, GA. 30518

PROJ. NO.:
DATE: 10/27/2007
DESIGNED BY:
DRAWN BY:
CHECKED BY: PAGLIAT 6
APPROVED BY: PAGLIAT 7

EXCAVATION DRAIN PROFILE

COUNTYWIDE RDF
ISOLATION BARRIER CELLS 5-7

FIGURE
7

Project Desc.: Prototype Drawing for 24 x 36 Sheet Path: N:\Countywide\FGO Confidential\TB\DRAWINGS\10-24-07TB_rev3.pro Plot Date/Time: Sat Oct 27,2007 / 11:16:53

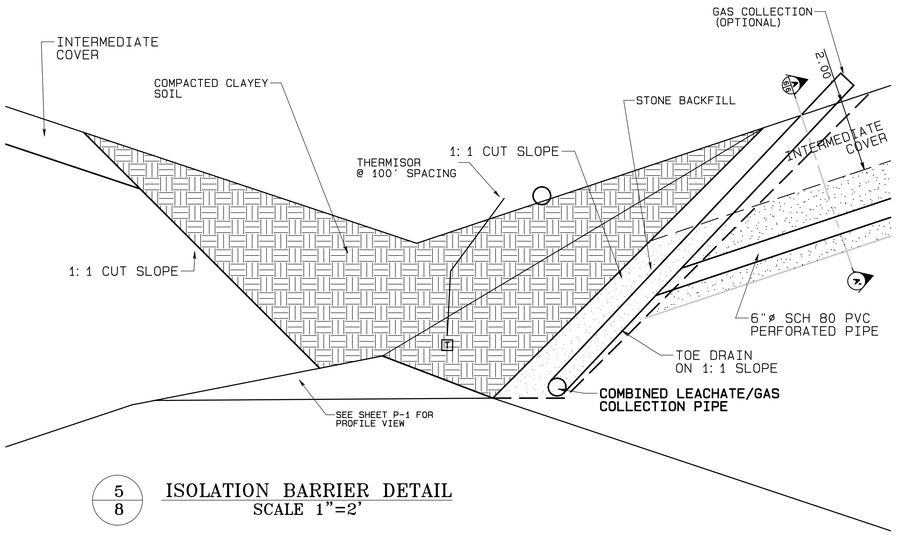


5/8 ISOLATION BARRIER DETAIL
SCALE 1"=2'

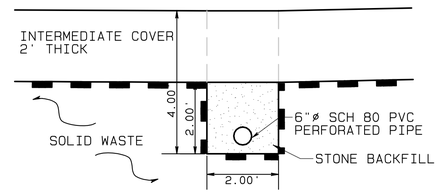


A-A'/8 SIDE SLOPE DRAIN
SCALE 1"=2'

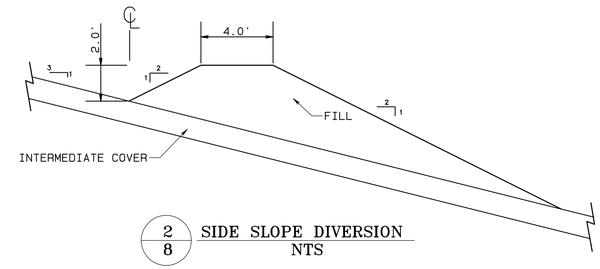


2/8 SIDE SLOPE DIVERSION
NTS

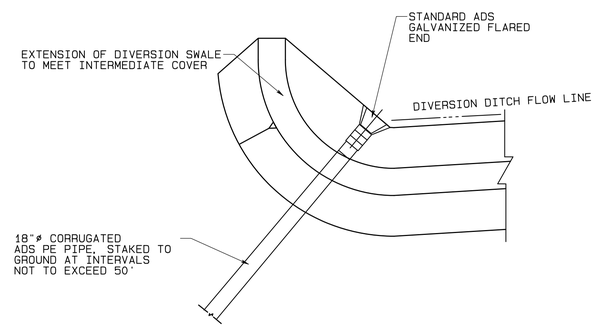


3/8 SIDE SLOPE DIVERSION TO LET DOWN PIPE
NTS

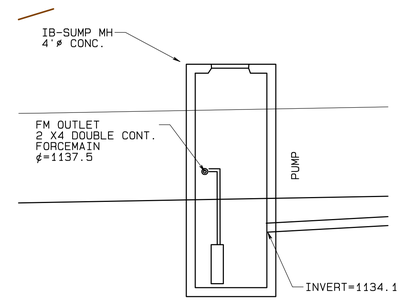


4/8 SUMP DETAIL
SCALE 1"=4'

## ISOLATION BREAK NOTES

1) THE ISOLATION ZONE EXCAVATION IS TO PROCEED SEQUENTIALLY FROM WEST TO EAST. NO MORE THAN 20 OF EXCAVATION IS TO BE OPEN AT FULL DEPTH, AT ANY ONE LOCATION.

2) EXCAVATE TO WITHIN 1.0 OF LINER SURFACE USING GPS CONTROLLED BACKHOE. REMOVE REMAINDER OF WASTE WITH BACKHOE WITH RUBBER BILLED BUCKET, OR OTHER METHOD THAT WILL NOT DAMAGE THE LINER SYSTEM.

3) FOLLOWING INITIAL SETTING OF THE GROUT, FILL THE REMAINING EXCAVATION WITH SOIL MEETING A UNIFIED SOIL CLASSIFICATION OF CL. THE SOILS WILL BE PRE-QUALIFIED WITH CLASSIFICATION AND COMPACTION TESTS PERFORMED ON ONE SAMPLE FOR EACH 1000 CU.YD. OR EACH MATERIAL SOURCE THE MATERIAL WHICHEVER IS MORE FREQUENT SHALL HAVE A MOISTURE CONTENT AT THE TIME OF PLACEMENT >4% OF THE OPTIMUM MOISTURE CONTENT AS DETERMINED BY ASTM D-698. SOILS SHALL BE PRE-CONDITIONED FOR MOISTURE CONTENT PRIOR TO PLACEMENT IN THE TRENCH. MOISTURE CONTENT SHALL BE TESTED EACH DAY OF FILL PLACEMENT.
   a. SOIL SHALL BE LOOSE DUMPED INTO THE TRENCH,
   b. SPREAD IN LIFTS NOT EXCEEDING 18"
   c. COMPACTED TO CREATE A RELATIVELY COHESIVE MASS USING A SMALL SMOOTH DRUMMED ROLLER OR SIMILAR DEVICE
   d. THE AMOUNT OF COMPACTIVE EFFORT WILL BE DETERMINED IN THE FIELD DURING THE INITIAL STAGES OF CONSTRUCTION. THE DETERMINATION WILL BE BASED ON VISUAL OBSERVATION OF EXCAVATED COMPACTED MATERIAL. THE PROCEDURE FOR THE COMPACTION PROCESS WILL BE FINALIZED AT THAT TIME.

4) DRAINAGE TRENCH IS TO BE CONSTRUCTED CONCURRENTLY WITH BARRIER.

5) STONE BACKFILL TO CONSIST OF #4 STONE

REPUBLIC SERVICES OF OHIO II

| REVISION | DATE |
|---|---|
| 1 | |
| 2 | |
| 3 | |
| 4 | |
| 5 | |

P. J. CAREY & ASSOCIATES, P.C.
5879 VALINE WAY, SUGAR HILL, GA. 30518

PROJ. NO.:
DATE: 10/27/2007
DESIGNED BY:
DRAWN BY:
CHECKED BY: PAJCLNT 6
APPROVED BY: PAJCLNT 7

EXCAVATION DETAILS

COUNTYWIDE RDF
ISOLATION BARRIER CELLS 5-7

FIGURE
8

Project Desc.: Prototype Drawing for 24 x 36 Sheet Path: N:\Countywide\FGD Confidential\IB\DRAWINGS\10-24-07IB_rev3.pro Plot Date/Time: Sat Oct 27,2007 / 11:15:59

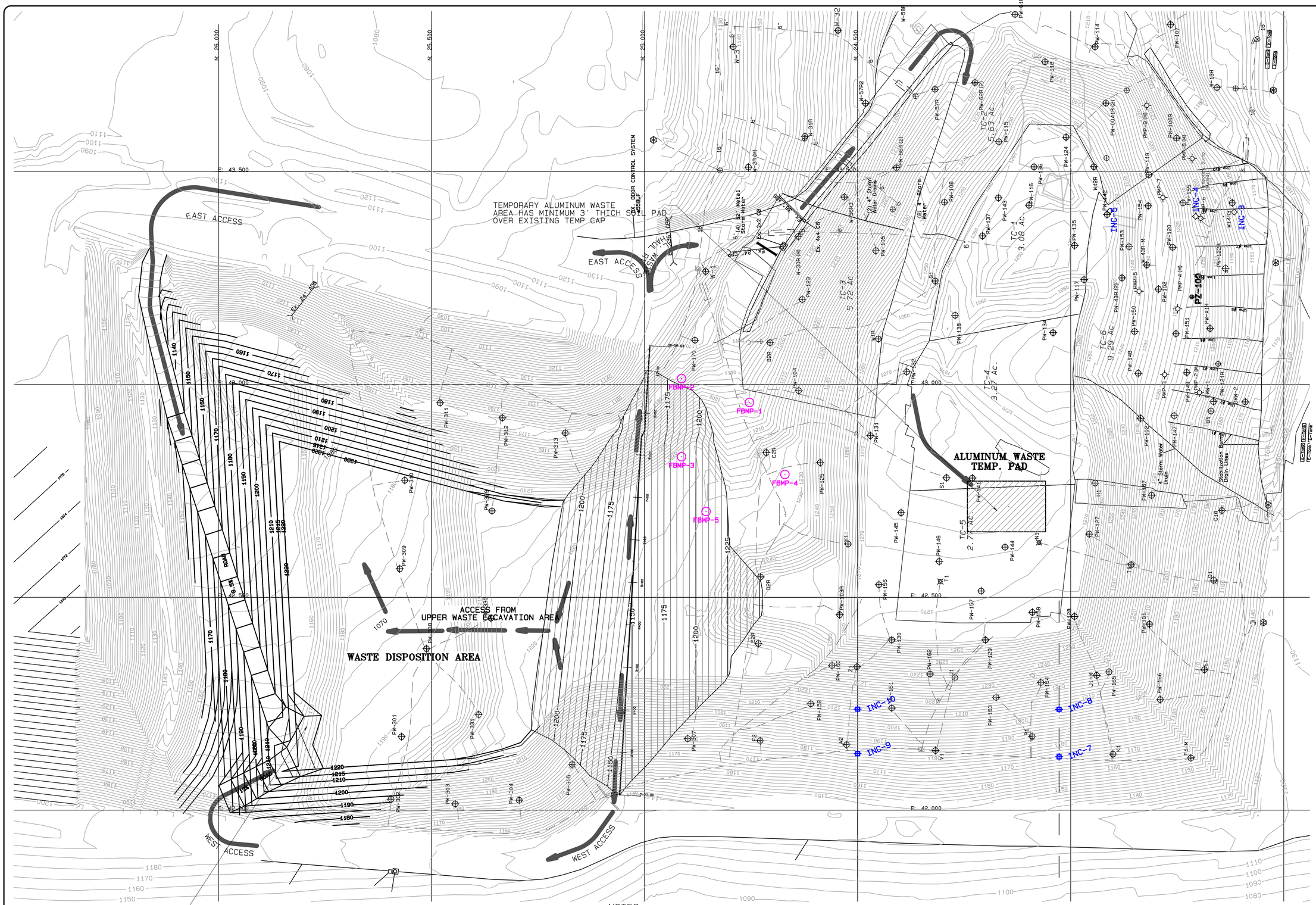


NOTES:

1) SEE OTHER SHEETS FOR LEGEND
2) WASTE GRADES SHOWN IN CELLS 7-8A ASSUME WASTE IS PLACED IN CELL 8B IN ACCORDANCE WITH SCHEDULE HAVING NO OPERATING WASTE PLACED IN 7-8A AFTER DECEMBER 8, 2007
3) ARROWS REPRESENT HAULAGE ROUTES FOR EXCAVATED WASTE FROM ISOLATION BREAK TO LOCATION OF DISPOSITION

GRAPHIC SCALE 1"=100'

0 100 200 300

REPUBLIC SERVICES OF OHIO II

REVISION | DATE

P. J. CAREY & ASSOCIATES, P.C.

5878 VALINE WAY, SUGAR HILL, GA. 30518

PROJ. NO.:
DATE: 10/27/2007
DESIGNED BY:
DRAWN BY:
CHECKED BY: PRJCLNT 6
APPROVED BY: PRJCLNT 7

WASTE RELOCATION AND TRAFFIC ROUTES

COUNTYWIDE RDF
ISOLATION BARRIER CELLS 5-7

FIGURE
10

Project Desc.: Prototype Drawing for 24 x 36 Sheet Path: N:\Countywide\FGO Confidential\IB\DRAWINGS\10-24-07IB_rev3.pro Plot Date/Time: Sat Oct 27, 2007 / 11:27:53