Middletown Coke Company
Revised Application for Major New Source Permit to Install

July 2009

Prepared for:

SunCoke Energy, Inc.
Parkside Plaza
11400 Parkside Drive
Knoxville, Tennessee 37934

MIDDLETOWN COKE COMPANY
REVISED APPLICATION FOR MAJOR NEW SOURCE
PERMIT TO INSTALL

Prepared for:

SunCoke Energy, Inc.
Parkside Plaza
11400 Parkside Drive
Knoxville, Tennessee 37934

Prepared by:

URS Corporation
1093 Commerce Park Drive, Suite 100
Oak Ridge, Tennessee 37830
0711211

July 2009

This page intentionally left blank.

TABLE OF CONTENTS

LIST OF FIGURES v
LIST OF TABLES vii
ACRONYMS ix

1.0 INTRODUCTION/OVERVIEW 1-1

2.0 HEAT RECOVERY COKE PLANT DESCRIPTION 2-1

3.0 EMISSIONS ANALYSIS 3-1

4.0 SOURCE-SPECIFIC REGULATORY ANALYSIS 4-1
4.1 Federal Rules 4-1
4.1.1 NESHAP for Source Categories 4-1
4.1.2 Standards of Performance for New Stationary Sources 4-7
4.1.3 Compliance Assurance Monitoring 4-7
4.1.4 Applicability of Rules for Steam Generating Units 4-8
4.2 Ohio Rules 4-8

5.0 BEST AVAILABLE CONTROL TECHNOLOGY AND BEST AVAILABLE TECHNOLOGY ANALYSES 5-1
5.1 Best Available Control Technology Requirements Summary 5-2
5.1.1 "Top-Down" Methodology Summary 5-2
5.1.2 Identification of Available Control Technologies 5-3
5.2 PM from Coking and Related Activities 5-4
5.2.1 Coking 5-7
5.2.2 Charging 5-20
5.2.3 Coke Crushing and Screening 5-20
5.2.4 Pushing 5-21
5.2.5 Quenching 5-25
5.2.6 Selection of BACT for PM/PM_{10} 5-27
5.2.7 BACT Selection for Fugitive Particulate Matter 5-28
5.3 Carbon Monoxide for Coking and Related Activities 5-29
5.3.1 Coking Emissions 5-29
5.3.2 Pushing Emissions 5-31
5.3.3 Selection of BACT and BAT for CO 5-31
5.4 SO_2 from Coking and Related Activities 5-32
5.4.1 Coking 5-32
5.4.2 Charging and Pushing 5-48
5.4.3 Selection of BACT for SO_2 5-48
5.5 H_2SO_4 for Coking and Related Activities 5-48
5.6 NO_x from Coking and Related Activities 5-49
5.6.1 Coking 5-50
5.6.2 Coking – HRSG and SD/BH Maintenance 5-60
5.6.3 NO_x BACT Summary – Coking 5-60
5.7 Summary of Proposed BACT and BAT 5-61

6.0 AMBIENT AIR IMPACTS 6-1
6.1 Ohio EPA Required Modeling for MCC 6-2
6.2 AERMOD Model Input Parameters and Results 6-9

7.0 ADDITIONAL IMPACT ANALYSIS 7-1
7.1 Growth 7-2
7.2 Soils, Vegetation, and Endangered Species Impacts 7-3
7.2.1 Sulfur Dioxide Emissions 7-9
7.2.2 Nitrogen Oxide Emissions 7-11
7.2.3 Particulate Matter Emissions 7-11
7.2.4 Carbon Monoxide Emissions 7-11
7.2.5 Endangered Species Impacts 7-12
7.3 Local Visibility Analysis 7-13
7.4 Class I Area 7-14

8.0 LOWEST ACHIEVABLE EMISSION RATE ANALYSIS 8-1
8.1 Lowest Achievable Emission Rate 8-1
8.2 Limitations in State and Federal Rules 8-2
8.3 Limitations Achieved in Practice 8-8
8.4 Air Pollution Controls 8-15
8.5 LAER Demonstration 8-15
8.5.1 LAER for $PM_{2.5}$ 8-15
8.5.2 LAER for SO_2 8-21
8.5.3 LAER for NO_X 8-27

9.0 REFERENCES 9-1

Appendix A: MANUFACTURER'S LETTER
Appendix B: FORMS
Appendix C: SUPPORTING CALCULATIONS
Appendix D: BEST AVAILABLE CONTROL TECHNOLOGY SUPPORTING INFORMATION
Appendix E: COMPLIANCE ASSURANCE MONITORING PLAN
Appendix F: DISPERSION MODELING FILES

LIST OF FIGURES

Figure 2-1 SunCoke Heat Recovery Oven Diagram 2-3
Figure 2-2 Coal Processing Flow Diagram 2-8
Figure 2-3 Coke Plant Flow Diagram 2-9
Figure 2-4 Coke Processing Flow Diagram 2-10
Figure 2-5 MCC Plant Layout 2-11
Figure 5-1 Spray Dryer Gas Desulfurization Process 5-36
Figure 5-2 Wet Scrubber 5-38
Figure 5-3 Schematic of an SNCR Application at a Boiler 5-53
Figure 5-4 HRSG and Ductwork at HNCC 5-57
Figure 5-5 Schematic of an SCR Application 5-59
Figure 6-1 MCC Emission Locations and Area Source Combinations 6-11
Figure 6-2 MCC Receptor Grid and Source Locations 6-13
Figure 6-3 MCC Receptor Grid and Shaded Relief of Surrounding Terrain 6-14
Figure 6-4 Wind Rose of Surface Data (1987-1991) from Cincinnati/Covington 6-17
Figure 6-5 MCC – PM_{10} 24-hour Significant Impact Area Atop Aerial 6-21
Figure 6-6 MCC – Location of Off-Site Inventory Modeled Sources 6-25
Figure 7-1 MCC – Soil Survey and Pasture and Hayland Suitability Map (USDA) 7-5
Figure 7-2 MCC – Soil Survey and Playground Suitability Map (USDA) 7-7
Figure 7-3 Locations of MCC and Class I Areas 7-15
Figure 8-1 Daily Coal Sulfur Measurements at HNCC 8-23
Figure 8-2 SO_2 Emission Factor and Fraction of Sulfur to Flue Gas 8-25

This page intentionally left blank.

LIST OF TABLES

Table 1-1 Comparison of Heat Recovery Coke Plant Emissions with Significant Emission Rates 1-2

Table 1-2 Emission Offset Credits from AK Steel 1-3

Table 3-1 Maximum MCC Emissions 3-2

Table 3-2 Summary of Maximum Annual HAP Emissions from MCC 3-3

Table 4-1 Federal Rules for Nonrecovery Coke Oven Batteries 4-2

Table 4-2 Applicable State General Rules and Compliance Demonstration 4-9

Table 5-1 RBLC Database Search Results for BACT CO Limits at Nonrecovery Coke Facilities 5-5

Table 5-2 Typical PM Control Efficiencies for Air Pollution Control Devices 5-14

Table 5-3 Theoretically Feasible Controls for PM/PM_{10} Reductions During Maintenance 5-16

Table 5-4 Summary of Top-Down BACT Impact Analysis Results for PM/PM_{10} for Maintenance Emissions 5-18

Table 5-5 Summary of Recommended BACT for PM/PM_{10} Control 5-28

Table 5-6 BACT and BAT for Fugitive PM 5-28

Table 5-7 RBLC Database Search Results for BACT CO Limits at Nonrecovery Coke Facilities 5-30

Table 5-8 RBLC Database Search Results for BACT SO_2 Control at Nonrecovery Coke Facilities 5-33

Table 5-9 Potential Technologies for SO_2 Control on Waste Gas from Coking Process 5-35

Table 5-10 Theoretically Feasible Controls for SO_2 Reductions During Maintenance 5-44

Table 5-11 Summary of Top-Down BACT Impact Analysis Results for SO_2 for Maintenance Emissions 5-46

Table 5-12 Summary of Recommended BACT for SO_2 Control 5-48

Table 5-13 Summary of Recommended BACT for SO_3/H_2SO_4 Control 5-49

Table 5-14 RBLC Database Search Results for BACT NO_x Control at Nonrecovery Coke Facilities 5-51

Table 5-15 Summary of BACT/BAT Selection 5-62

Table 6-1 Heat Recovery Coke Plant Annual Emissions (tons/year) 6-2

Table 6-2 MCC – Modeled Source Parameters 6-5

Table 6-3 AERMET – Geophysical Parameters Used in Meteorological Data Processing by Sector and Season (Spring, Summer, Fall, and Winter) 6-15

Table 6-4 MCC – Maximum Modeled Pollutant Concentrations and Comparisons with Thresholds 6-19
Table 6-5 Maximum Modeled MCC and PSD Increment Inventory Impacts 6-23
Table 6-6 Maximum Modeled MCC and Off-Site Inventory Impacts 6-27
Table 7-1 Comparison of MCC Impacts to EPA Screening Levels and NAAQS 7-11
Table 8-1 State Requirements Potentially Applicable to Heat Recovery Coke Facilities ... 8-3
Table 8-2 Federal Rules for Nonrecovery Coke Oven Batteries (MACT Standards) 8-7
Table 8-3 PM/PM_{10} Limitations Achieved in Practice at Heat Recovery Coke Making Facilities 8-9
Table 8-4 SO_2 Limitations Achieved in Practice at Heat Recovery Coke Making Facilities 8-11
Table 8-5 NO_x Limitations Achieved in Practice at Heat Recovery Coke Making Facilities 8-12
Table 8-6 RBLC Database Search Results for LAER PM Limits at Coke Facilities 8-13
Table 8-7 RBLC Database Search Results for LAER SO_2 Limits at Coke Facilities 8-14
Table 8-8 Comparison of PM Emission Limitations Applied to Heat Recovery Coke Ovens 8-17
Table 8-9 Comparison of SO_2 Emission Limitations Applied to Heat Recovery Coke Ovens 8-29
Table 8-10 Comparison of NO_x Emission Limitations Applied to Heat Recovery Coke Ovens 8-31

ACRONYMS

AERMOD	American Meteorological Society/Environmental Protection Agency Regulatory Model
AK Steel	AK Steel Corporation
BACT	Best Available Control Technology
BAT	Best Available Technology
bpip	Building Profile Input Program
CAA	Clean Air Act
CAM	Compliance Assurance Monitoring
$CaSO_3$	Calcium Sulfite
$CaSO_4$	Calcium Sulfate
cfm	cubic feet per minute
CFR	Code of Federal Regulations
CO	Carbon Monoxide
DEM	Digital Elevation Model
dscf	dry standard cubic foot
EPA	Environmental Protection Agency
ESP	Electrostatic Precipitator
FLM	Federal Land Manager
GECC	Gateway Energy and Coke Company
GEP	Good Engineering Practice
H_2SO_4	Sulfuric Acid Mist
HAP	Hazardous Air Pollutant
HCl	Hydrogen Chloride
HNCC	Haverhill North Coke Company
HRSG	Heat Recovery Steam Generator
LAER	Lowest Achievable Emission Rate
LNB	Low NO_X Burner
MACT	Maximum Achievable Control Technology

MAGLC	Maximum Acceptable Ground-level Concentration
MCC	Middletown Coke Company
NAAQS	National Ambient Air Quality Standards
NESHAP	National Emission Standards for Hazardous Air Pollutants
NO_2	Nitrogen Dioxide
NO_X	Nitrogen Oxides
NSR	New Source Review
OAC	Ohio Administrative Code
OAQPS	Office of Air Quality Planning and Standards
PM	Particulate Matter
PM_{10}	Particulate Matter less than 10 micrometers in diameter
$PM_{2.5}$	Particulate Matter less than 2.5 micrometers in diameter
ppm	parts per million
PSD	Prevention of Significant Deterioration
PTI	Permit to Install
RACT	Reasonably Available Control Technology
RBLC	RACT/BACT/LAER Clearinghouse
SCR	Selective Catalytic Reduction
SD/BH	Spray Dryer/Baghouse
SIA	Significant Impact Area
SIL	Significant Impact Level
SNCR	Selective Non-catalytic Reduction
SO_2	Sulfur Dioxide
SO_3	Sulfur Trioxide
TDS	Total Dissolved Solids
USDA	U.S. Department of Agriculture
USFWS	U.S. Fish and Wildlife Service
VOC	Volatile Organic Compound

1.0 INTRODUCTION/OVERVIEW

On November 25, 2008, Middletown Coke Company (MCC) received a Permit to Install (PTI) authorizing it to construct and operate a heat recovery coke-making facility adjacent to AK Steel Corporation's (AK Steel's) Middletown Works in Middletown, Ohio. Certain challenges to that permit are ongoing. While MCC possesses a valid PTI, it hereby applies to obtain a major new source permit to be used if MCC determines that such a permit is preferable to the PTI. MCC is owned by SunCoke Energy, Inc., which is a business unit of Sunoco, Inc. This application package contains information required by the Ohio Environmental Protection Agency (EPA) to evaluate the project and issue an air pollution control PTI as a major new source for the project.

The proposed operation will consist of 100 heat recovery coke ovens in three batteries. Operations at the facility will include coal handling, charging, heat recovery coking, pushing, quenching, coke handling, and coke storage. Heat recovery steam generators (HRSGs) will recover waste heat from the ovens to produce steam and electricity. At design capacity, the facility will coke 910,000 tons/year of coal and produce up to 614,000 tons/year of furnace coke. A nominal 52 MW of electricity will be produced from the waste heat. All the power produced will be sent to AK Steel through the grid under a bilateral trade agreement.

The facility will be located in Butler County, Ohio. Butler County, as part of the Cincinnati-Hamilton metropolitan area, is currently designated as nonattainment for 8-hour ozone (Subpart 1) and particulate matter less than 2.5 micrometers in diameter ($PM_{2.5}$). The area is designated as attainment with all other ambient air quality standards.

Table 1-1 lists the potential emissions from the heat recovery coke plant and the values that represent significant emission rates in Ohio Administrative Code (OAC) 3745-31-01(MMMMM). The facility will be a major source of particulate matter (PM), particulate matter less than 10 micrometers in diameter (PM_{10}), $PM_{2.5}$, sulfur dioxide (SO_2), nitrogen oxides (NO_X), and carbon monoxide (CO). The facility will also emit sulfur trioxide (SO_3). It is conservatively assumed that these emissions are sulfuric acid mist (H_2SO_4). Note that PM, PM_{10}, and $PM_{2.5}$ emissions are based on "filterable" particulate consistent with current Ohio EPA guidance (Ohio

EPA 2008) and EPA rules (EPA 2008) for $PM_{2.5}$. The project will not result in significant emissions increases of volatile organic compounds (VOC) or lead. The information required to obtain a PTI under the requirements of OAC 3745-31 is included with this permit application.

Table 1-1

Comparison of Heat Recovery Coke Plant Emissions with Significant Emission Rates

Pollutant	Potential Emission Rate (tons/year)	Significant Threshold (tons/year)	Significant (Yes/No)
PM (filterable)	169.6	25	Yes
PM_{10} (filterable)	125.6	15	Yes
$PM_{2.5}$ (filterable)	112.9	10	Yes
SO_2	1,152.3	40	Yes
NO_X	477.4	40	Yes
CO	129.5	100	Yes
VOC	31.4	40	No
Lead	0.28	0.6	No
SO_3 (as H_2SO_4)	34.2	7	Yes

CO = Carbon Monoxide
H_2SO_4 = Sulfuric Acid Mist
NO_X = Nitrogen Oxides
PM = Particulate Matter
$PM_{2.5}$ = Particulate Matter less than 2.5 micrometers in diameter
PM_{10} = Particulate Matter less than 10 micrometers in diameter
SO_2 = Sulfur Dioxide
SO_3 = Sulfur Trioxide
VOC = Volatile Organic Compound

The attainment provisions [in OAC-3745-31-(11)–(18)] apply to PM, PM_{10}, CO, SO_2, NO_X, and H_2SO_4. Applicable requirements addressed in this application include installation of Best Available Control Technology (BACT) (see Section 5.0), Ambient Air Impacts (see Section 6.0), and Additional Impacts (see Section 7.0).

The nonattainment provisions [in OAC-3745-31-(21)–(27)] apply to $PM_{2.5}$, to NO_X as an ozone precursor, and to SO_2 as a $PM_{2.5}$ precursor (see Section 4.0). Applicable requirements include installation of Lowest Achievable Emission Rate (LAER) (see Section 8.0).

Because of the nonattainment status of Butler County, the emission increases of $PM_{2.5}$, NO_X, and SO_2 will be offset with emission offset credits that are at least 1.0 to 1.0. Most of the emission offset credits will come from shutdown of the AK Steel Sinter Plant. Table 1-2 shows that the AK Steel reductions satisfy the emission offset requirement for all pollutants except

NO_X. Approximately 85 tons of additional NO_X are needed. These additional offsets will be obtained in accordance with Ohio EPA rules and verified by the Ohio EPA.

Table 1-2

Emission Offset Credits from AK Steel

Pollutant	Emissions (tons/year)		
	$PM_{2.5}$	SO_2	NO_X
Emissions Increases			
Heat Recovery Coke Plant	112.9	1,152.3	477.4
AK Steel Material Handling	0.3	—	—
AK Steel Roadways with Associated Dick's Creek Area	0.02	—	—
Total Project	113.2	1,152.3	477.4
Emissions Reductions from Sinter Plant Shutdown			
Raw Materials Unloading	9.27	—	—
Windbox	104.24	1,615.4	394.6
Breaker End	17.08	—	—
Cold Sinter Screening	3.43	—	—
Total AK Steel Emission Offset Credits	134.0	1,615.4	394.6
Additional Emission Offset Credits Needed			82.8

NO_X = Nitrogen Oxides
$PM_{2.5}$ = Particulate matter less than 2.5 micrometers in diameter
SO_2 = Sulfur Dioxide

MCC will voluntarily purchase ambient PM_{10} monitors, $PM_{2.5}$ monitors and volatile organic hazardous air pollutant (HAP) monitors. The monitors will be sited and operated by the Hamilton County Department of Environmental Services. They will be installed, sited, and operated in accordance with all Ohio EPA and USEPA regulations and be operational by the startup date of the facility.

Section 2.0 includes a more detailed discussion of the heat recovery coke plant. Section 3.0 presents the air pollutant emissions analysis. Source-specific emissions requirements for the facility are discussed in Section 4.0. The remaining sections of the application text present specific information required by the attainment and nonattainment rules for major sources. Correspondence from a supplier is included in Appendix A. The Ohio EPA forms and supporting calculations are included in Appendices B and C, respectively, and were submitted electronically using eBusiness Center. The cost factors that were used for evaluating PM/PM_{10} control options are provided in Appendix D, along with the calculations used to evaluate the options. A Compliance Assurance Monitoring (CAM) Plan for the spray dryer/baghouse

(SD/BH) system based on EPA guidance is included in Appendix E. Appendix F contains the dispersion modeling files.

2.0 HEAT RECOVERY COKE PLANT DESCRIPTION

A total of 100 ovens are planned at MCC. They will be arranged in three batteries – one with 20 ovens and two with 40 ovens each. At design capacity, the facility will carbonize 910,000 tons/year of coal and produce up to 614,000 tons/year of furnace coke.

MCC will use SunCoke Energy's Jewell-Thompson heat recovery type of oven. In coke production from both heat recovery and byproduct ovens, the volatile fraction of the coal is driven off in a reducing atmosphere. Coke is essentially the remaining carbon and ash. With byproduct ovens, the volatiles and combustion products are collected downstream of the oven chamber and refined in a chemical plant to produce coke oven gas and other products such as tar, ammonia, and light oils. In heat recovery ovens, all the coal volatiles are oxidized within the ovens.

Each technology has its own set of design objectives that affect its emissions. Both types of ovens are typically constructed of refractory brick shapes and other materials that, with day-to-day operation, can form small cracks in the refractory and around the removable parts. Byproduct ovens are kept at a positive pressure to avoid oxidizing recoverable products and overheating the ovens. Heat recovery ovens are kept at a negative pressure, adding air from the outside to oxidize volatile matter and release the heat of combustion within the oven system. The opposite operating pressure condition and combustion within the oven system are important design differences between heat recovery ovens and byproduct ovens. Small openings or cracks in byproduct ovens allow raw coke oven gas (and HAPs) to leak into the atmosphere. The openings or cracks in the heat recovery ovens simply allow additional air to be drawn into the oven.

Figure 2-1 shows a cut-away drawing of a heat recovery oven. Coal is charged onto the oven floor at the beginning of the cycle. Heat from the hot refractory starts the carbonization cycle. Air is first introduced into the oven crown. Partially combusted gases pass into a sole flue system beneath the oven floor where essentially all combustion is completed. The gases then pass into an afterburner tunnel where any remaining uncombusted gases are oxidized. The afterburner tunnel system routes the hot gases to the HRSGs.

This page intentionally left blank.

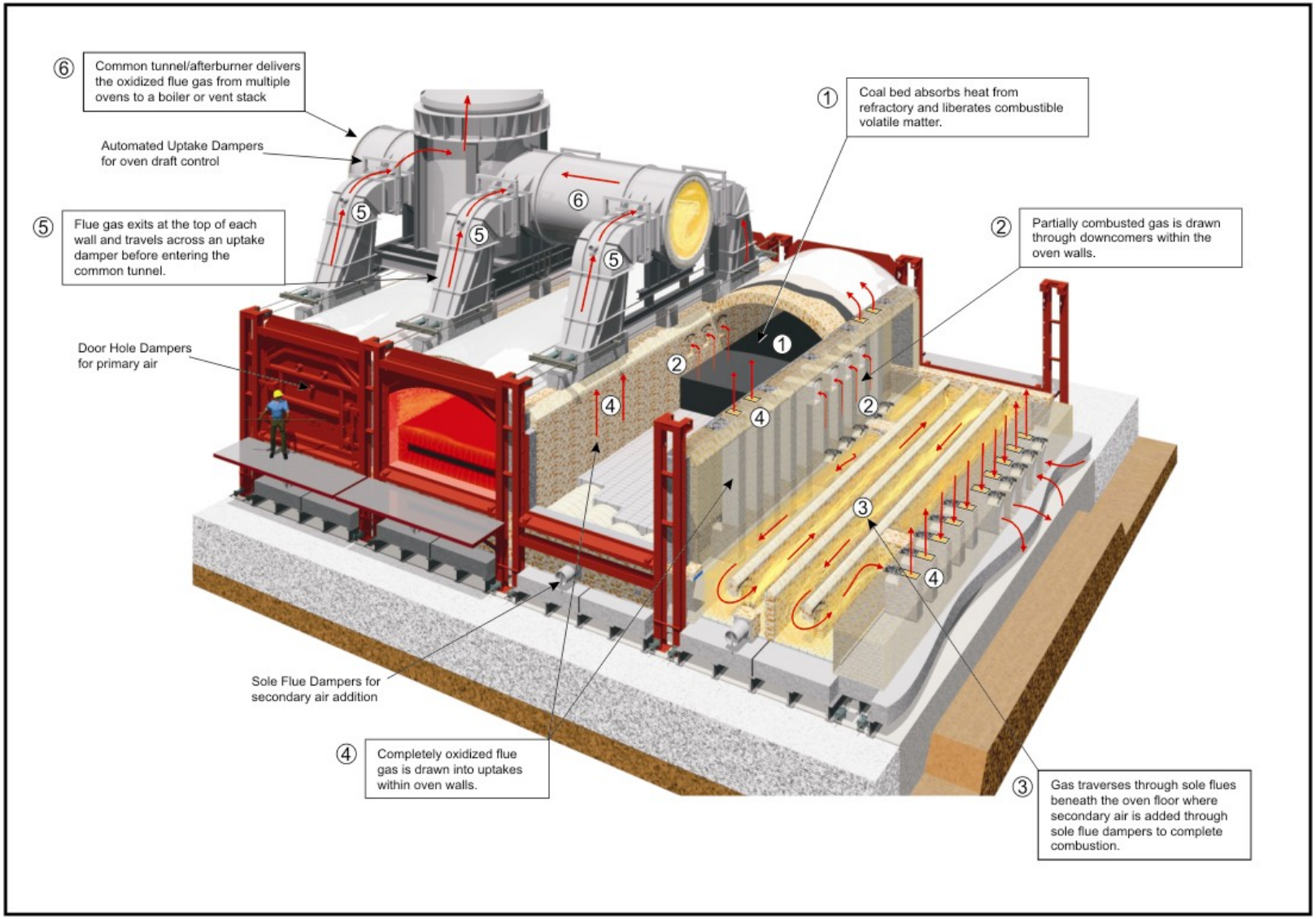

Figure 2-1. SunCoke Heat Recovery Oven Diagram

This page intentionally left blank.

Coal will come into the facility by rail. A thaw shed will be installed that can heat the coal cars, as needed, using electric heaters. Coal will be stored in open piles partially enclosed by berming and wind screening and will be equipped with watering systems to minimize emissions. Emissions from material transfer will be controlled by enclosures except in a few areas where the potential to overheat coal or interfere with dispersion of steam from coke may pose a safety hazard. A traveling hood/baghouse system on the pushing/charging machine will control charging emissions that escape the ovens. HRSGs will recover heat from the oven waste gases and protect the downstream pollution control devices. PM and SO_2 will be removed from the oven gases in a lime SD/BH system. All flue gases will go through this system except during times of HRSG or SD/BH maintenance. Use of the SD/BH is maximized so that approximately 96% of the flue gases are treated by these air pollution controls. A mobile flat hot push car with multicyclone will capture pushing emissions. Quenching will be performed in a specially designed quench tower with baffles. Quenching emissions will be controlled by using water with total dissolved solids (TDS) levels less than or equal to 1,100 mg/L for quenching and by a unique baffle design. A baghouse will control emissions from the coke screening and crushing facilities. Coke will normally be transferred directly to AK Steel by conveyor, but a system to allow coke to be loaded into rail cars will be installed. Provisions will be made to store a run of oven coke, screened coke, and coke breeze in open coke piles if necessary. Plant roads will be paved to control PM.

The individual waste heat stacks will be used during annual inspection and maintenance of each HRSG so that these procedures can be performed safely. The maximum time that will be required for planned maintenance and inspection of each HRSG is 10 days/year. The planned outages will be scheduled so that the HRSGs are brought down one at a time for maintenance and inspection. During the scheduled maintenance, 20 ovens will vent waste gases directly into the atmosphere, bypassing the SD/BH system. These gases will still pass through the common tunnel afterburner system, which will fully combust the gases prior to release into the atmosphere. The remaining 80 ovens will continue to pass through the SD/BH. On an annual basis, 2.7% of the waste gases from the ovens will be vented through the waste heat stacks.

It was originally envisioned that the HRSGs could be inspected and maintained once a year in a single 8-day outage. However, experience at Haverhill North Coke Company (HNCC)

has been that the HRSGs tend to foul heavily with the waste gases from heat recovery coking – even with regular soot blowing. This causes two problems. First, it ultimately shortens HRSG tube life and increases the likelihood of HRSG malfunctions. Second, the thermal efficiency of the HRSG degrades and the temperature of the gases going to the SD/BH system increases. The result is that more water is required to cool the gases entering the spray dryer. This causes an increase in the dew point temperature, which makes it more likely for corrosion in the SD/BH and ductwork. Increased corrosion in the SD/BH system increases the likelihood of having to take the SD/BH system offline for extensive repairs. The recommended resolution is to perform a "mini outage" for the HRSG halfway through the year in addition to the primary outage for maintenance and inspection. It takes several days to safely inspect and maintain a HRSG considering the time to cool the HRSG down, close the entrance and exit so that it is safe to enter, perform the inspection and maintenance, open the entrance and exit, and gradually heat up the HRSG to avoid thermal shock. Experience at HNCC has shown that 10 days/year are ideal for performing the two outages for maintenance and inspection.

The SD/BH will be designed so that much of the routine inspection and maintenance can be performed while the system is operating. For example, the rotary atomizers can be exchanged during operation, and external components such as hopper heaters, level detectors, and the filter bag cleaning system can all be inspected and replaced during normal operation. The baghouse will have extra compartments so that some can be offline during operation, allowing filter bags and cages to be inspected and replaced when necessary. In addition, there will be three fans so that there will be a spare as well as one offline for inspection and maintenance.

The proposed supplier of this equipment (Hamon Research-Cottrell) recommends an annual internal inspection for SD/BH installations for their operating units. Quick inspections are also needed during unexpected plant forced outages. Recognizing the more challenging service for a heat recovery coking facility, they recommend an aggressive preventive maintenance program for optimum performance that will promote the maximum effective service life of all components. Correspondence from Hamon with these recommendations is included in Appendix A. As such, MCC proposes 5 days/year for inspection/maintenance of the SD/BH. This work will be performed using good work practices and scheduling the work to be performed in the shortest possible time. During these 5 days, the flue gases will be routed around the SD/BH

system and emitted from the main stack. On an annual basis, 1.4% of the waste gases from the ovens will bypass the SD/BH system during maintenance.

The process is illustrated schematically in Figures 2-2 through 2-4. Figure 2-2 shows the coal processing, Figure 2-3 shows the coke plant, and Figure 2-4 shows the coke processing. Figure 2-5 shows the overall plant layout.

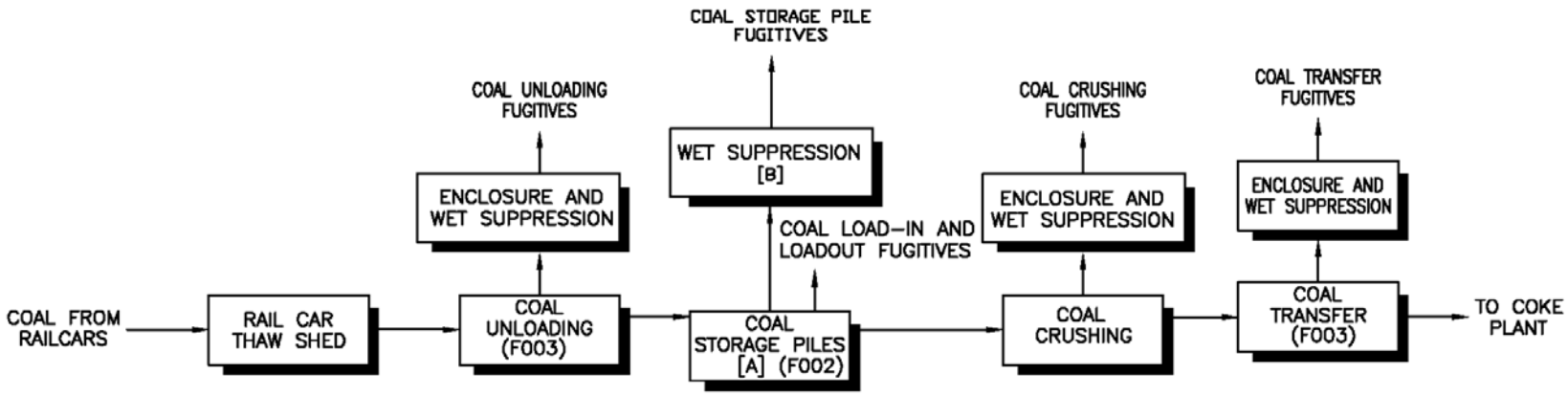

NOTE:

[A] COAL STORAGE PILE INCLUDES COAL LOAD-IN FUGITIVES, COAL PILE FUGITIVES, AND COAL LOADOUT FUGITIVES.

[B] OPEN PILE WITH WET SUPPRESSION.

URS 1083 Commerce Park Drive, Suite 100 Oak Ridge, Tennessee, 37830	Figure 2-2 Coal Processing Flow Diagram Middletown, OH	REVISION: 4 DATE: 12/12/08	DRAWN BY: E.ROTHFELDT CHECKED BY: J. CARSON

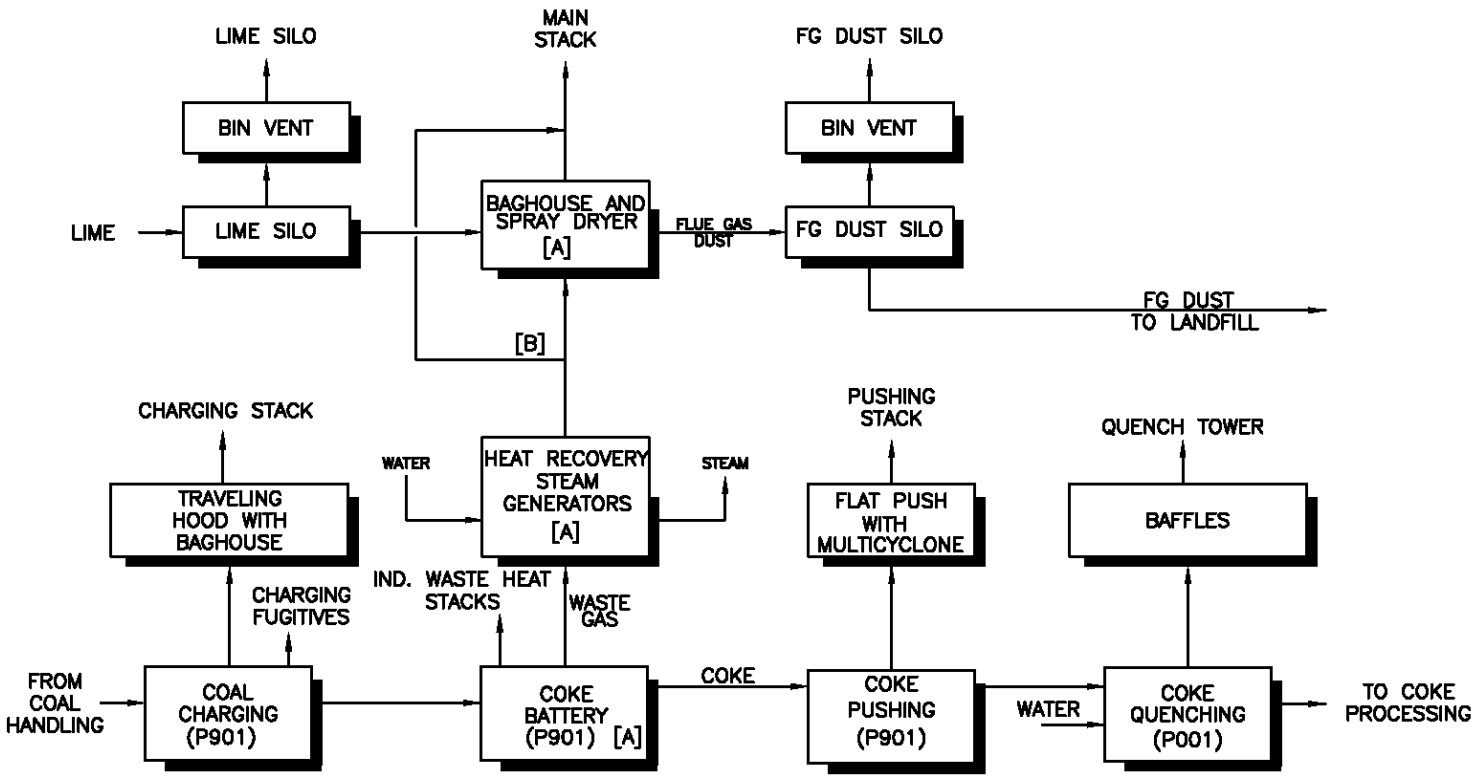

[A] 96% of waste gas to spray dryer/baghouse, 4% of waste gas vented.
[B] Waste gases bypass spray dryer and baghouse during maintenance.

URS	Figure 2–3 Coke Plant Flow Diagram Middletown, OH	REVISION: 1 DATE: 12/12/08	DRAWN BY: E.ROTHFELDT CHECKED BY: J. CARSON

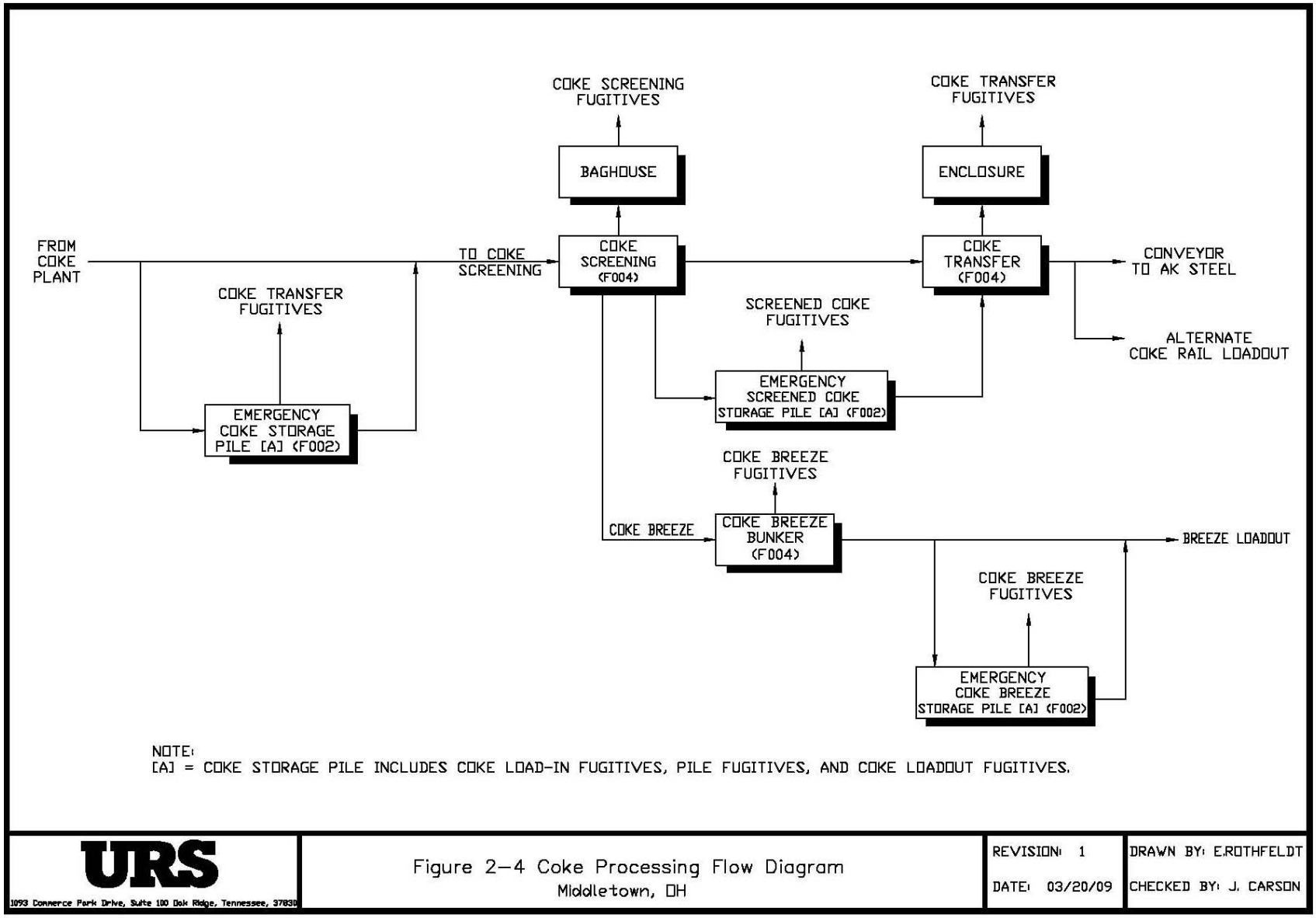
COKE SCREENING FUGITIVES
COKE TRANSFER FUGITIVES
BAGHOUSE
ENCLOSURE
FROM COKE PLANT
TO COKE SCREENING
COKE SCREENING (F004)
COKE TRANSFER (F004)
CONVEYOR TO AK STEEL
COKE TRANSFER FUGITIVES
SCREENED COKE FUGITIVES
ALTERNATE COKE RAIL LOADOUT
EMERGENCY SCREENED COKE STORAGE PILE [A] (F002)
EMERGENCY COKE STORAGE PILE [A] (F002)
COKE BREEZE FUGITIVES
COKE BREEZE
COKE BREEZE BUNKER (F004)
BREEZE LOADOUT
COKE BREEZE FUGITIVES
EMERGENCY COKE BREEZE STORAGE PILE [A] (F002)
NOTE:
[A] = COKE STORAGE PILE INCLUDES COKE LOAD-IN FUGITIVES, PILE FUGITIVES, AND COKE LOADOUT FUGITIVES.
URS
1093 Commerce Park Drive, Suite 100 Oak Ridge, Tennessee, 37830
Figure 2-4 Coke Processing Flow Diagram
Middletown, OH
REVISION: 1
DATE: 03/20/09
DRAWN BY: E.ROTHFELDT
CHECKED BY: J. CARSON

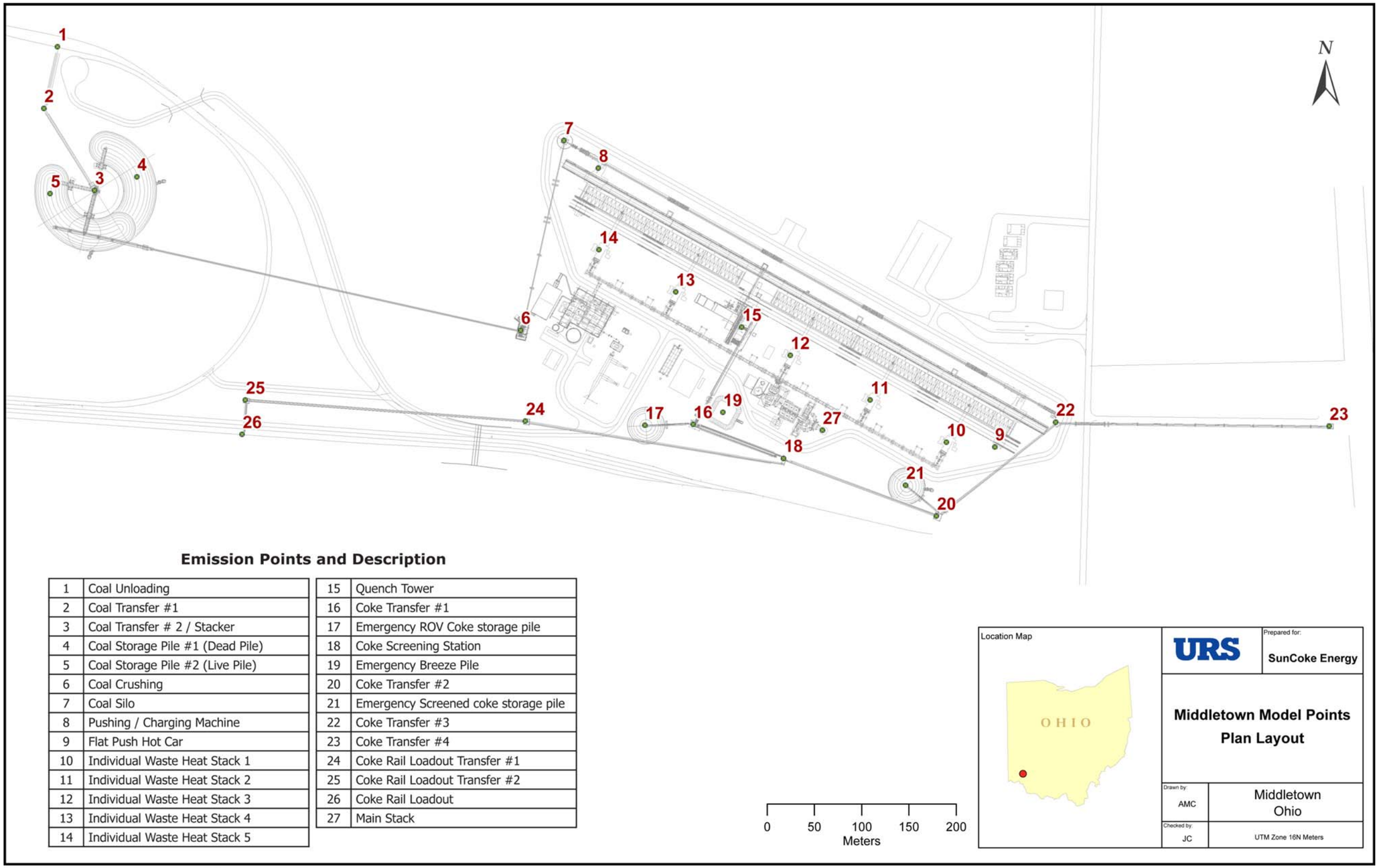

Emission Points and Description

1	Coal Unloading
2	Coal Transfer #1
3	Coal Transfer # 2 / Stacker
4	Coal Storage Pile #1 (Dead Pile)
5	Coal Storage Pile #2 (Live Pile)
6	Coal Crushing
7	Coal Silo
8	Pushing / Charging Machine
9	Flat Push Hot Car
10	Individual Waste Heat Stack 1
11	Individual Waste Heat Stack 2
12	Individual Waste Heat Stack 3
13	Individual Waste Heat Stack 4
14	Individual Waste Heat Stack 5

15	Quench Tower
16	Coke Transfer #1
17	Emergency ROV Coke storage pile
18	Coke Screening Station
19	Emergency Breeze Pile
20	Coke Transfer #2
21	Emergency Screened coke storage pile
22	Coke Transfer #3
23	Coke Transfer #4
24	Coke Rail Loadout Transfer #1
25	Coke Rail Loadout Transfer #2
26	Coke Rail Loadout
27	Main Stack

S:\Sun Coke\AK Steel Middletown\Drawings\Shapes\Middletown_3-19-09_Plant.PDF

Figure 2-5. MCC Plant Layout

This page intentionally left blank.

3.0 EMISSIONS ANALYSIS

This section contains a summary of air pollutant emissions from MCC. Facility-wide emissions are summarized in Table 1-1. Plant operation will be continuous (8,760 hours/year). Annual emissions are based on the maximum oven charge rate of 910,000 tons/year of coal. Many of the processes are batch operations and do not operate continuously. Production and emissions are limited by the nature of the operation. The cycle time is typically 48 hours. Half the ovens will be charged each day with each oven charged every other day.

Table 3-1 presents the annual stack and fugitive criteria pollutant (plus SO_3 as H_2SO_4) emissions by emissions unit. Note that the emissions from heat recovery coking represent potential to emit and overestimate actual emissions. The majority of HAP emissions are hydrogen chloride (HCl). The facility total emissions of HAPs, other than HCl, will be less than 5 tons/year. Table 3-2 summarizes the HAP emissions.

Although there are no specific regulations requiring heat recovery coke ovens to control mercury emissions, as a voluntary measure, MCC is proposing a mercury emission control system for the facility. During coking, some of the mercury in the coal is volatilized and converted to mercury vapor. This vapor may subsequently form mercury compounds or may be adsorbed onto the surface of other particles. The mechanisms are complex, but mercury is ultimately present as a mixture of mercury vapor, ionic mercury compounds, and particulate mercury. A spray dryer followed by a baghouse has the potential to effectively remove mercury in the ionic and particle phases.

Various studies have shown that carbon injection has the capability to remove vapor-phase mercury with an SD/BH. The sorbent is injected upstream of the spray dryer. The gas-phase mercury contacts the sorbent in the ductwork and spray dryer and attaches to its surface. The sorbent with the mercury is then collected in the baghouse.

Table 3-1

Maximum MCC Emissions

Emissions Unit	Designation	Associated Control Device[a]	Filterable PM (tons/year)	Filterable PM_{10} (tons/year)	Filterable $PM_{2.5}$ (tons/year)	SO_2 (tons/year)	NO_X (tons/year)	CO (tons/year)	VOCs (tons/year)	Lead (tons/year)	Sulfuric Acid (tons/year)
Fugitive emissions	Coal unloading, storage, handling, and processing	WS, E	7.65	3.70	1.26	—	—	—	—	—	—
Coal charging	Charge	Traveling hood with baghouse	4.63	3.77	3.58	0.14	—	1.28	0.91	0.00005	—
Heat recovery coking	Coking (main stack)	Baghouse, common tunnel afterburner, and lime spray dryer	46.93	46.93	46.93	700.8	450.00	95.54	20.47	0.12	11.13
Heat recovery coking – SD/BH /baghouse maintenance	Coking (main stack)	Baghouse, common tunnel afterburner, and lime spray dryer	6.30	6.30	6.30	107.64	6.25	1.31	0.28	0.03	5.49
Heat recovery coking – HRSG maintenance	Coking (individual waste heat stacks)	Common tunnel afterburner	12.60	12.60	12.60	299.00	12.50	2.62	0.56	0.07	15.25
Coke pushing	Pushing	Flat push and traveling hood with multicyclone	13.09	13.09	13.09	44.71	8.67	28.74	9.13	0.008	2.28
Coke quenching	Quench	Baffles, with TDS control water	54.75	20.08	12.32	—	—	—	—	0.05	—
Coke screening	Processing	Baghouse, E	15.02	15.02	15.02	—	—	—	—	—	—
Fugitive emissions	Coke handling, storage, and loadout	WS, E	6.90	3.29	1.08	—	—	—	—	—	—
Fugitive emissions	Industrial roads	Paving, W, GH	1.08	0.21	0.05	—	—	—	—	—	—
Other fugitive emissions	SD/BH dust, lime silo, and cooling tower	Bin vent	0.64	0.64	0.64	—	—	—	—	—	—
Total Emissions			169.59	125.63	112.87	1,152.29	477.42	129.49	31.35	0.28	34.15

[a] W = watering as needed, E = enclosure, GH = good housekeeping, WS = wet suppression or wet material

CO = Carbon Monoxide
HRSG = Heat Recovery Steam Generator
MCC = Middletown Coke Company
NO_X = Nitrogen Oxides
PM = Particulate Matter
$PM_{2.5}$ = Particulate matter less than 2.5 micrometers in diameter
PM_{10} = Particulate matter less than 10 micrometers in diameter
SD/BH = Spray Dryer/Baghouse
SO_2 = Sulfur Dioxide
TDS = Total Dissolved Solids
VOC = Volatile Organic Compound

Table 3-2

Summary of Maximum Annual HAP Emissions from MCC

Compound	Coking - Main and Waste Heat Stacks (tons/year)	Charging (tons/year)	Pushing (tons/year)	Quenching (tons/year)	Total Maximum Annual Emissions (tons/year)
Anthracene	Part of total PAHs	Part of total PAHs	NM	Part of total PAHs	Part of total PAHs
Benzene	2.28E-01	1.64E-02	NM	ND	2.44E-01
Benzo(a)pyrene	Part of total PAHs	Part of total PAHs	NM	Part of total PAHs	Part of total PAHs
Benzo(b,k)fluoranthene	Part of total PAHs	Part of total PAHs	NM	Part of total PAHs	Part of total PAHs
Bromoform	5.70E-04	ND/NR	NM	ND	5.70E-04
Bromomethane	2.66E-01	ND/NR	NM	ND	2.66E-01
Benzene Soluble Organics	ND/NR	ND/NR	9.58E-02	ND	9.58E-02
2-Butanone	2.99E-02	ND/NR	NM	ND	2.99E-02
Carbon disulfide	7.60E-03	9.58E-04	NM	ND	8.56E-03
Chlorobenzene	5.70E-04	ND/NR	NM	ND	5.70E-04
Chloroform	5.23E-03	ND/NR	NM	ND	5.23E-03
Chloromethane	3.61E-01	9.13E-04	NM	ND	3.62E-01
Chrysene	Part of total PAHs	Part of total PAHs	NM	Part of total PAHs	Part of total PAHs
Cumene	6.65E-04	ND/NR	NM	ND	6.65E-04
Ethylbenzene	1.52E-03	3.33E-04	NM	ND	1.85E-03
Fluoranthene	Part of total PAHs	Part of total PAHs	NM	Part of total PAHs	Part of total PAHs
Fluorene	Part of total PAHs	Part of total PAHs	NM	Part of total PAHs	Part of total PAHs
Hydrogen chloride	118.04	NM	NM	NM	118.04
Iodomethane	2.99E-03	ND/NR	NM	ND	2.99E-03
Isooctane	7.60E-03	ND/NR	NM	ND	7.60E-03
Methylene chloride	3.14E-01	ND/NR	NM	ND	3.14E-01
2-Methylnaphthalene	Part of total PAHs	Part of total PAHs	NM	Part of total PAHs	Part of total PAHs
4-Methyl-2-Pentanone	4.23E-03	ND/NR	NM	ND	4.23E-03
2-Methylphenol	ND/NR	ND/NR	NM	4.75E-03	4.75E-03
4-Methylphenol/3-Methylphenol	ND/NR	ND/NR	NM	1.53E-02	1.53E-02
Naphthalene	Part of total PAHs	Part of total PAHs	NM	Part of total PAHs	Part of total PAHs
n-Hexane	7.13E-03	ND/NR	NM	ND	7.13E-03
Phenanthrene	Part of total PAHs	Part of total PAHs	NM	Part of total PAHs	Part of total PAHs
Phenol	3.37E-02	ND/NR	NM	1.11E-02	4.49E-02
Pyrene	Part of total PAHs	Part of total PAHs	NM	Part of total PAHs	Part of total PAHs
Styrene	3.28E-03	ND/NR	NM	ND	3.28E-03
Tert-butyl methyl ether	2.23E-05	ND/NR	NM	ND	2.23E-05
Tetrachloroethane	1.95E-04	ND/NR	NM	ND	1.95E-04
1,1,2,2-Tetrachloroethane	9.50E-04	ND/NR	NM	ND	9.50E-04
Toluene	2.42E-01	7.76E-03	NM	ND	2.50E-01
Total PAHs	1.29E-01	2.01E-02	NM	3.57E-03	1.52E-01
1,1,1-Trichloroethane	1.19E-03	ND/NR	NM	ND	1.19E-03
1,1,2-Trichloroethane	2.76E-04	ND/NR	NM	ND	2.76E-04
Trichloroethene	4.12E-03	ND/NR	NM	ND	4.13E-03
Vinyl acetate	3.28E-03	ND/NR	NM	ND	3.28E-03
Xylenes	7.70E-03	3.06E-03	NM	ND	1.08E-02

Table 3-2

(Continued)

Compound	Coking - Main and Waste Heat Stacks (tons/year)	Charging (tons/year)	Pushing (tons/year)	Quenching (tons/year)	Total Maximum Annual Emissions (tons/year)
Antimony[a]	5.40E-03	ND/NR	ND	3.71E-03	9.12E-03
Arsenic	5.40E-02	1.10E-04	5.48E-03	7.36E-02	1.33E-01
Beryllium	8.31E-04	3.97E-06	ND	2.44E-04	1.08E-03
Cadmium	7.48E-03	ND/NR	ND	ND	7.48E-03
Chromium	2.62E-02	4.56E-05	ND	1.28E-03	2.75E-02
Cobalt	ND/NR	3.24E-05	ND	7.85E-04	8.18E-04
Lead	1.90E-01	4.56E-05	6.98E-03	3.96E-02	2.36E-01
Manganese	1.25E-02	2.10E-04	9.58E-04	1.48E-02	2.84E-02
Mercury[b]	8.15E-02	3.60E-07	ND	ND	8.15E-02
Nickel	2.41E-02	6.48E-05	ND	1.86E-03	2.60E-02
Phosphorus	5.82E-01	ND/NR	ND	3.53E-02	6.17E-01
Selenium	1.33E-02	ND/NR	ND	6.03E-03	1.93E-02
Total HAPs (tons/year)	120.70	0.05	0.11	0.21	121.07
Total HAPs without HCl (tons/year)	2.66	0.05	0.11	0.21	3.03
Total HAPs without HCl with buffer (tons/year)[c]					3.64

[a]Estimated 95% removal in SD/BH for all metals except mercury.
[b]Estimated 50% mercury removal in spray dryer/baghouse with carbon injection.
[c]Total HAPs (except HCl) emissions include 20% buffer that recognizes the emission factors are based on AP-42 emission factors, which can change, and limited test data.

HAP = Hazardous Air Pollutant
HCl = Hydrogen Chloride
MCC = Middletown Coke Company
ND = Not Detected
NM = Not Measured
NR = Not Reported
PAH = Polynuclear Aromatic Hydrocarbon

This potential for mercury control is potentially a significant advantage for the SD/BH when used with carbon injection. MCC intends to install a system that can inject carbon upstream of the spray dryer at a rate of up to 10 lb carbon per million actual cubic feet of flue gas. This same system is installed at SunCoke's Haverhill II facility at a carbon injection rate of 2 lb carbon per million actual cubic feet of flue gas.

This page intentionally left blank.

4.0 SOURCE-SPECIFIC REGULATORY ANALYSIS

This section summarizes the pertinent regulations associated with the types of operations proposed at the MCC plant. Section 4.1 discusses federal rules, and Section 4.2 discusses Ohio rules. Other sections of the application discuss general requirements for major sources in attainment and nonattainment areas.

4.1 Federal Rules

The federal rules evaluated for potential applicability to the MCC plant are New Source Review (NSR), New Source Performance Standards, and National Emission Standards for Hazardous Air Pollutants (NESHAP). The applicability of each rule is discussed in the following sections. Table 4-1 summarizes the applicable federal rules, recordkeeping, and reporting information. In addition, the MCC plant will be required to obtain a Part 70 Title V air operating permit.

4.1.1 NESHAP for Source Categories

This section discusses the NESHAP for coke oven batteries, pushing, quenching, and combustion stacks.

National Emission Standards for Coke Oven Batteries—The Maximum Achievable Control Technology (MACT) standards for coke oven batteries are contained in 40 Code of Federal Regulations (CFR) 63, Subpart L, National Emission Standards for Coke Oven Batteries. Specific requirements for nonrecovery (same as heat recovery) batteries are in Section 303 of this rule. The requirements are 0% leaks for doors, a capture/control system for charging, and daily monitoring of pressure in each oven or in a common battery (afterburner) tunnel.

The heat recovery coke ovens proposed for the MCC plant will be operated under negative pressure. This meets the requirements of the MACT rule and ensures compliance with the 0% door leakage standard. The ovens to be installed at the MCC plant have no topside lids or off-take piping, so those requirements are not applicable.

Table 4-1

Federal Rules for Nonrecovery Coke Oven Batteries

Emissions Unit	Rule Citation	Rule Summary	Compliance Demonstration		Recordkeeping		Reporting	
			Activity	Frequency	Activity	Frequency	Activity	Frequency
Coke Oven Batteries	40 CFR 63.306	Prepare work practice plan that addresses training and controlling emissions	Prepare and revise work practice plan that addresses training and procedures for controlling emissions	NA	Keep on file for 5 years	Initial and revise as necessary	Submit to Administrator if requested	As necessary
	40 CFR 63.310(a)	Operate equipment using good air pollution control practices	Operate according to standard operating procedures	Ongoing	NA	NA	NA	NA
	40 CFR 63.310(b) and 40 CFR 63.7310(c)	Develop and implement startup, shutdown, and malfunction plan	Describe procedures for operating during these periods	NA	Keep on file for 5 years	Initial and revise as necessary	Notify agency of malfunction within 24 hours; submit written report within 14 days	As necessary
	40 CFR 63.311(b)(2)	Certify initial compliance	Provide written statement to certify initial compliance	NA	Keep on file for 5 years	NA	Submit required notification within 45 days of compliance date	Initial
	40 CFR 63.311(c)	Written notification of intention to construct new coke oven battery	Provide agency with the notification	NA	Keep on file for 5 years	NA	Submit required notification	Initial
	40 CFR 63.311(d)	Semiannual compliance certification	Submit semiannual compliance certification to agency	NA	Keep on file for 5 years	Ongoing	Submit certifications and reports	Semiannually
	40 CFR 63.311(f)(1)	Documentation of nonrecovery requirements	Maintain files of required information (daily pressure monitoring, performance of work practice requirements)	Ongoing	Maintain information on-site for 1 year and available for 5 years	Ongoing	Submit certifications and deviations with semiannual report	Semiannually

Table 4-1

(Continued)

Emissions Unit	Rule Citation	Rule Summary	Compliance Demonstration		Recordkeeping		Reporting	
			Activity	Frequency	Activity	Frequency	Activity	Frequency
Coke Oven Doors	40 CFR 63.303(b)(1)(ii)	Demonstrate negative pressure	Monitor and record once a day the pressure of each oven or in a battery common tunnel	Daily	Summary of pressure in each battery common tunnel	Daily	Report incidence of positive pressure	Semiannually
	40 CFR 63.303(c)(1)	Observe each door for visible emissions	Record oven number from which visible emissions occur	Daily	Summary of doors with visible emissions	Daily	Submit certifications and deviations with semiannual report	Semiannually
	40 CFR 63.303(c)(2)	Corrective actions for doors with visible emissions	Stop visible emissions within 15 minutes	As necessary	Summary of actions taken	As necessary	Submit certifications and deviations with semiannual report	Semiannually
Charging	40 CFR 63.303(b)(2)	Use emission control system for capture and collection of charging emissions	Achieve compliance by the use of a traveling hood with a baghouse to capture and control emissions	Ongoing	Maintain design characteristics on file	Initial and revise as necessary	NA	NA
	40 CFR 63.303(d)(1)	Visible emissions from charging must be ≤20%	Observe five consecutive charges/week for each charging capture system	Weekly	Maintain records in file	Weekly	Submit certifications and deviations with semiannual report	Semiannually
	40 CFR 63.303(d)(2)	PM (filterable) emissions from control device must be ≤0.0081 lb/dry ton of coal	Perform stack test to demonstrate compliance	Initial within 180 days, then once per Title V permit term	Maintain test results in file	NA	Submit certification of test results	When test is performed

Table 4-1

(Continued)

Emissions Unit	Rule Citation	Rule Summary	Compliance Demonstration		Recordkeeping		Reporting	
			Activity	Frequency	Activity	Frequency	Activity	Frequency
Charging (continued)	40 CFR 63.303(d)(3)	Visible emissions from control device stack must be ≤10%	Operator will observe stack daily for any visible emissions. If any visible emissions are observed, perform visible emissions measurement using EPA Method 9	Daily	Summary of observations	Daily	Submit certifications and deviations with semiannual report	Semiannually
	40 CFR 63.303(d)(4)	Operating procedures during charging	Operating procedures must address uptake damper operation during charging	NA	Keep on file for 5 years	Initial and revise as necessary	Submit to Administrator if requested	NA
Pushing	40 CFR 63.7290(a)(4)	PM (filterable) limited to 0.04 lb/ton of coke from mobile control device that captures emissions during travel	Compliance is achieved by use of flat car pushing with traveling hood and multicyclone. Demonstrate with performance test	Initial within 180 days, then twice per Title V permit term	Keep on file for 5 years	Initial and revise as necessary	Submit certification of test results	When test is performed
	40 CFR 63.7290(b)(3)	Establish minimum volumetric flow rate	Establish minimum volumetric flow rate during performance test	Initial within 180 days, then twice per Title V permit term	Keep on file for 5 years	Initial and revise as necessary	Submit certification of test results	When test is performed
	40 CFR 63.7290(b)(3)(i)	Monitor pushing fan amps	Monitor multicyclone fan amps as a surrogate for flow rate. Daily average must be above minimum	Once per shift (every 8 hours)	Summary of data	Daily	Submit certifications and deviations with semiannual report	Semiannually
	40 CFR 63.7290(b)(4)	Monitor multicyclone pressure drop	Monitor multicyclone pressure drop. Describe in monitoring plan. Daily average must be in range	Each push	Summary of data	Daily	Submit certifications and deviations with semiannual report	Semiannually

Table 4-1

(Continued)

Emissions Unit	Rule Citation	Rule Summary	Compliance Demonstration		Recordkeeping		Reporting	
			Activity	Frequency	Activity	Frequency	Activity	Frequency
Pushing (continued)	40 CFR 63.7293(a)	Visually inspect ovens before pushing	Do not push an oven until operator verifies by looking into the oven that coking is complete	Daily	Summary of data	Daily	Submit certifications and deviations with semiannual report	Semiannually
	40 CFR 63.7300(c)(1)	Inspections	Inspect components important to system capture. Repair within 30 days or submit notice that repair will take longer	Monthly	Summary of data	Monthly	Submit notice for delayed repair or request for extension if necessary	As necessary.
	40 CFR 63.7300(c)(2)	Preventive maintenance	Establish preventive maintenance schedule	NA	Keep on file	Initial, revise as necessary	NA	NA
Quenching	40 CFR 63.7295(b)(1)	Quench tower baffle construction requirement	No more than 5% of the quench tower may be open to the sky	Ongoing	NA	NA	NA	NA
	40 CFR 63.7295(b)(2)	Quench tower baffle washing requirement	Baffles must be washed each day unless prohibited by cold temperature	Daily	Summary of data on file	Daily	Submit certifications and deviations with semiannual report	Semiannually
	40 CFR 63.7295(b)(3)	Quench tower inspection	Monthly inspection for blockage or missing baffles	Monthly	Summary of data on file	Monthly	Submit certifications and deviations with semiannual report	Semiannually
	40 CFR 63.7295(b)(4)	Quench tower repair	Initiate repair or replacement of baffles within 30 days	As necessary	Keep maintenance records on file	As necessary	NA	NA

Table 4-1

(Continued)

Emissions Unit	Rule Citation	Rule Summary	Compliance Demonstration		Recordkeeping		Reporting	
			Activity	Frequency	Activity	Frequency	Activity	Frequency
Quenching (continued)	40 CFR 63.7295(a)(1)(i)	Quench water quality	Verify that the quench water TDS is ≤1,100 mg/L by sampling	Weekly	Summary of data	Weekly	Submit initial certification, then certifications and deviations with semiannual report	Initial and semiannually

CFR = Code of Federal Regulations
EPA = U.S. Environmental Protection Agency
NA = Not Applicable
PM = Particulate Matter
TDS = Total Dissolved Solids

The charging system will be equipped with collection hoods that are vented to baghouses for control. The estimated capture efficiency is 90%, and the estimated collection efficiency of the baghouses is 99%. This system satisfies the requirement to have a system that minimizes emissions.

National Emission Standards for Coke Ovens: Pushing, Quenching and Combustion Stacks—The MACT standards for pushing and quenching are contained in 40 CFR 63, Subpart CCCCC, National Emission Standards for Coke Ovens: Pushing, Quenching, and Battery Stacks. No requirements for combustion stacks have been promulgated for nonrecovery ovens because of the negative pressure design.

The MACT standard for pushing establishes PM limits and monitoring requirements for control devices. Work practice procedures are also established for ensuring that an oven is coked out before pushing.

The MACT standard for quenching establishes a limitation for TDS in quench water. The standard contains construction requirements for baffles. Work practice procedures for cleaning baffles are also established.

4.1.2 Standards of Performance for New Stationary Sources

The coal crusher is regulated under "Standard of Performance for Coal Preparation Plant," 40 CFR 60, Subpart Y. The requirement is that fugitive emissions from these operations are limited to 20% opacity.

4.1.3 Compliance Assurance Monitoring

Coking emissions will be controlled by an SD/BH system, which requires a CAM Plan as discussed in 40 CFR 64. Accordingly, a CAM Plan for the SD/BH system based on EPA guidance is included in Appendix E.

4.1.4 Applicability of Rules for Steam Generating Units

EPA evaluated whether a heat recovery (also referred to as nonrecovery) coke plant would be considered a steam generating unit and subject to regulations (e.g., for boilers) under 40 CFR 60, 60.40(b), and 41(b). An applicability determination, Control Number 9900003, was issued that the facility was not subject to these rules. Full text of the determination is available on the EPA web site at http://cfpub.epa.gov/adi/index.cfm.

4.2 Ohio Rules

EPA promulgated the MACT standards listed in Section 4.1.1 specifically for the nonrecovery (heat recovery) coke making technology. By contrast, Ohio air pollution control rules for coke ovens were written specifically for the byproduct coke making technology. For example, heat recovery ovens are charged by a horizontal flight conveyor rather than through charging ports and do not have charging hole lids. Heat recovery coke ovens do not collect partially combusted oven gases and consequently do not have off-takes or off-take piping. Therefore, rules that limit emissions from off-take piping and charging hole lids do not apply to heat recovery ovens. Other differences in the technologies are discussed in Section 2.0. For this reason, the MACT standards establish more appropriate requirements and limitations for operations specific to heat recovery coke making. General Ohio Air Pollution Control Rules that are applicable to the MCC facility are listed in Table 4-2.

Because of the ozone and $PM_{2.5}$ nonattainment designation of the area, the nonattainment provisions and conditions for approval of a PTI in OAC 3745-31-22(A) apply.

- LAER is required. See Section 8.0 for LAER demonstration.
- Compliance or a schedule to be in compliance is required for all existing major sources owned or operated by the applicant. MCC will provide a compliance certification prior to permit issuance.
- Emission offsets are required. As shown in Table 1-2, MCC will obtain emission offset credits from AK Steel for $PM_{2.5}$ and the precursors for $PM_{2.5}$ and ozone. Approximately 85 additional tons of NO_x are needed. MCC is currently pursuing these additional offsets and will obtain them in accordance with the provisions in

Table 4-2

Applicable State General Rules and Compliance Demonstration

Emission Unit	OAC Rule Citation	Rule Summary	Compliance Demonstration Activities
All emission units	3745-15-06	Air pollution control equipment shall be maintained and malfunctions shall be reported	Ongoing maintenance of control equipment and submit necessary reports as needed
	3745-15-07	No public nuisance (i.e., the emission of smoke, ashes, dust, dirt, grime, acids, fumes, gases, vapors, odors, or any other substances or combination of substances, in such manner or amounts to endanger the health, safety or welfare of the public, or cause unreasonable injury or damage to property)	Unless otherwise specified for a specific source, compliance will be achieved by good operating practices and investigation of any complaints
	3745-16-02	Stack height requirements	Compliance will be achieved by good engineering practice
Coke screening, charging, pushing, waste gases, and quenching	3745-17-11	Allowable particulate matter from operation, process, activity, and stacks except fugitive emissions	Compliance will be achieved by use of control equipment to capture and control emissions
Charging	3745-17-07(A)(1)	Stack: VE ≤20% (6 min average) VE ≤60% (6 min in each 60 min)	Use of a traveling hood with baghouse
Pushing	3745-31-05	BAT applied to each activity or operation that emits more than 10 tons/year of air contaminants	Compliance will be achieved by use of BAT
	3745-17-07(A)(1) and (B)(1)	Stack: VE ≤20% (6 min average) VE ≤60% (6 min in each 60 min) Fugitives: VE ≤20% (3 min)	Compliance will be achieved by the use of flat car pushing with traveling hood and multiclone
Waste gas	3745-31-05	BAT applied to each activity or operation that emits more than 10 tons/year of air contaminants	Compliance will be achieved by use of BAT
	3745-17-07(A)(1)	Stack: VE ≤20% (6 min average) VE ≤60% (6 min in each 60 min)	Compliance by initial stack test
	3745-18-06	SO_2	Compliance using SD/BH; CEMS monitoring of main stack SO_2 concentration and process data
Quenching	3745-31-05	BAT applied to each activity or operation that emits more than 10 tons/year of air contaminants	Compliance will be achieved by use of BAT
	3745-17-07(A)(1) and (B)(1)	Stack: VE ≤20% (6 min average) VE ≤60% (6 min in each 60 min) Fugitives: VE ≤ 20% (3 min)	Compliance will be achieved by the use of a baffled quench tower and control of total dissolved solids in quench water

Table 4-2

(Continued)

Emission Unit	OAC Rule Citation	Rule Summary	Compliance Demonstration Activities
Coal piles and coke pile	3745-17-07(B)(6)	VE ≤13 min/hour	Compliance will be achieved by the use of control equipment to capture and control emissions
	3745-17-08	RACM	Compliance will be achieved by control measures minimizing particulate emissions
Coal unloading, coal and coke handling, lime and SD/BH dust silo	3745-17-07(B)(1)	VE ≤20% (3 min)	Compliance will be achieved by the use of control equipment to capture and control emissions
	3745-17-08	RACM	Compliance will be achieved by control measures minimizing particulate emissions
Coke screening	3745-31-05	BAT applied to each activity or operation that emits more than 10 tons/year of air contaminants	Compliance will be achieved by use of BAT
	3745-17-07(A)(1) and (B)(1)	Stack: VE ≤20% (6 min average) VE ≤60% (6 min in each 60 min) Fugitives: VE ≤20% (3 min)	Compliance will be achieved by the use of good operating practices
Paved roads	3745-17-07(B)(4)	VE ≤6 min/hour	Compliance will be achieved by road watering and good housekeeping
	3745-17-08	RACM	Compliance will be achieved by control measures minimizing particulate emissions

BAT = Best Available Technology
CEMS = Continuous Emission Monitoring System
RACM = Reasonably Available Control Measures
SD/BH = Spray Dryer/Baghouse
SO_2 = Sulfur Dioxide
VE = Visible Emissions

OAC 3745-31-(21)–(27). The offset credits will be obtained from within the nonattainment area and verified by the Ohio EPA.

- The project must demonstrate a positive net air quality benefit. A net air quality benefit for ozone is demonstrated for NO_x if the offsets come from the same demonstration area (OAC 3745-31-25). Most of the NO_x will be from AK Steel, which is adjacent to MCC (less than 1 mile away), which satisfies this requirement. Other appropriate NO_x offsets will be obtained. $PM_{2.5}$ is a complex mixture of primary particles directly emitted into the air as solids and secondary particles that form in the atmosphere as a result of various chemical reactions. Virtually all nonattainment problems appear to result from a combination of local emissions and transported emissions from upwind areas ("Clean Air Fine Particle Implementation Rule; Final Rule," Federal Register, April 25, 2007). Consequently, it is important to consider the $PM_{2.5}$ net air quality benefit on a regional basis. A positive net air quality benefit for $PM_{2.5}$ will be demonstrated by:
  - Offsetting primary $PM_{2.5}$ by a ratio of at least 1.0 to 1.0 from the adjacent AK Steel facility (less than 1 mile away),
  - Offsetting the $PM_{2.5}$ precursors of SO_2 and NO_x by a ratio of at least 1.0 to 1.0, and
  - Producing electric power from the coke oven waste heat, which will reduce emissions that would otherwise be produced by coal-fired generators and other fossil-fired sources in Ohio and the Midwest.

This page intentionally left blank.

5.0 BEST AVAILABLE CONTROL TECHNOLOGY AND BEST AVAILABLE TECHNOLOGY ANALYSES

The Prevention of Significant Deterioration (PSD) permit regulations are designed to ensure that the National Ambient Air Quality Standards (NAAQS) and the PSD air quality increments are protected. One of the requirements of the rules designed to meet this objective is the requirement to install BACT. This is included in the Ohio attainment provisions at OAC 3745-31-15. The key requirement of this rule is that new major stationary sources apply BACT for pollutants that the source has the potential to emit in significant amounts. For MCC, these pollutants are PM, PM_{10}, CO, SO_2, H_2SO_4, and NO_x.

Control technologies and practices that control PM_{10} will also control PM. Therefore, PM and PM_{10} are addressed together. The pollutants CO, SO_2, H_2SO_4, and NO_x are addressed separately.

BACT is defined in OAC 3745-31-01(S) as:

> *Best available control technology or "BACT" means an emission limitation (including a visible emission standard) based on the maximum degree of reduction for each regulated NSR pollutant which would be emitted from any proposed major stationary source or major modification which the director, on a case-by-case basis, taking into account energy, environmental and economic impacts and other costs, determines is achievable for such major stationary source or major modification through application of production processes or available methods, systems and techniques, including fuel cleaning or treatment or innovative fuel combustion techniques for control of such pollutant. In no event shall application of BACT result in emissions of any pollutant that would exceed the emissions allowed by any applicable standard under 40 CFR Parts 60, 61, and 63. If the director determines that technological or economic limitations on the application of measurement methodology to a particular emissions unit would make the imposition of an emission standard infeasible, a design, equipment, work practice, operational standard, or combination thereof, may be approved by the director instead to satisfy the requirement for the application of BACT. Such standard shall, to the degree possible, set forth the emission reduction achievable by implementation of such design, equipment, work practice or operation and shall provide for compliance by means which achieve equivalent results.*

Ohio EPA has a similar requirement to employ “best available technology,” or BAT. BAT is defined in Ohio PTI Rules [OAC 3745-31-01(T)] as follows:

Best available technology or "BAT" means any combination of work practices, raw material specifications, throughput limitations, source design characteristics, …… and air pollution control devices that have been previously demonstrated to the director of environmental protection to operate satisfactorily in this state or other states with similar air quality on substantially similar air pollution sources.

The requirement to employ BAT is applied to each separate operation or activity with the potential to emit more than 10 tons/year of each criteria air contaminant. Generally, demonstration of BACT requires a more thorough investigation and is a more rigorous requirement. Control technologies and practices that meet BACT will also meet BAT.

5.1 Best Available Control Technology Requirements Summary

The BACT requirement is defined as an emission limitation based on the maximum degree of reduction for each pollutant subject to regulation under the Clean Air Act (CAA) emitted from or that results from a major emitting facility that the permitting authority, on a case-by-case basis, taking into account energy, environmental, and economic impacts and other costs, determines is achievable. For pollutants that are required to be reviewed under the nonattainment NSR rules, a more stringent technology requirement is specified, which requires the application of LAER. The LAER requirement is addressed in Section 8.0 of this application. The requirement for LAER does not allow for a case-by-case weighing of the environmental, economic, and energy impacts. However, a technology that is determined to be LAER should be considered in the BACT assessment and is usually considered the most stringent technology available.

5.1.1 "Top-Down" Methodology Summary

The BACT analysis presented in this report is based on a "top-down" approach, consistent with the draft top-down BACT guidance document issued by EPA on March 15, 1990, which is reflected in EPA's *New Source Review Workshop Manual* (EPA 1990). In the "top-down" methodology, available control technology options are identified based on knowledge of the source and previous regulatory decisions for other identical or similar sources. These

alternatives are then ranked in descending order of control effectiveness (i.e., the "top" option is the most stringent). The feasibility or appropriateness of each alternative as BACT is based on technical feasibility. If the top control alternative is technically infeasible or is otherwise rejected as inappropriate after considering site-specific impacts, it is rejected and the next most stringent alternative is then considered. This process continues until a control alternative is determined to be achievable after weighing the economic, energy, and environmental impacts. This alternative is then selected as BACT.

5.1.2 Identification of Available Control Technologies

To determine which control technologies or techniques were available for consideration for the proposed project, the following resources were consulted:

- *EPA Air Pollution Control Cost Manual* (EPA 2002);
- EPA's Office of Air Quality Planning and Standards (OAQPS) MACT developmental data;
- MACT standards for coke oven batteries (40 CFR 63, Subpart CCCCC, NESHAP for Coke Ovens: Pushing, Quenching, and Battery Stacks; Final Rule);
- MACT standards for coke oven batteries (40 CFR 63, Subpart L, NESHAP for Coke Oven Batteries);
- EPA's Reasonably Available Control Technology (RACT)/BACT/LAER Clearinghouse (RBLC);
- Permits for similar sources issued in other states; and
- Applicant knowledge.

The RBLC database, made available through EPA's OAQPS Technology Transfer Network, lists technologies that have previously been approved as BACT. As of March 2009, the only BACT determinations in the database for heat recovery coke ovens are for SunCoke's Haverhill facility and U.S. Coking's facility, both located in Ohio.

5.2 PM from Coking and Related Activities

Consistent with the "top-down" methodology previously discussed, PM controls were evaluated in the BACT analysis for the coking process and related activities. Related activities include charging, pushing, quenching, and coke crushing and screening. In addition, several fugitive operations such as coal unloading, coal and coke transfer, coke sizing, and coke load-out account for approximately 10% of the particulate emissions.

The types of air pollution control systems used for coal-fired utility boilers could generally be used for heat recovery coke ovens. However, there are differences in the nature of the process and flue gas characteristics that prevent direct comparison of performance. The heat recovery flue gas is unique. It does not contain the light coal fly ash of a coal-fired boiler. The particulate loading in heat recovery coke oven flue gases is low due to the inherently excellent combustion. However, with little alkaline fly ash to adsorb HCl, chloride salts form in air pollution control devices. Coal fly ash is light and stays suspended, whereas calcium chloride is sticky and easily forms deposits. The air pollution control system for heat recovery coke ovens must be operated to minimize deposition of chloride salts. Also, coke ovens cannot be shut down without causing severe damage to the ovens. This is not the case with utility boilers, which can be routinely shut down if problems develop in the air pollution control system. Because of the uniqueness of this application, BACT determinations in the RBLC database were restricted to those for heat recovery coke ovens. Two BACT determinations were identified and are presented in Table 5-1.

Although Ohio EPA issued a PTI to the FDS Coke Plant in Oregon, Ohio, that facility was never constructed, its technology has therefore never been demonstrated, and consequently its limits cannot be considered BACT, BAT, or LAER for MCC. MCC does not believe that some of the limits accepted by FDS are achievable in practice and in any event cannot fully evaluate the FDS technology because the critical documents are not available as part of the permit application. Despite its inability to meaningfully evaluate this never-constructed technology, a review of the conceptual design identifies certain differences from the heat recovery SunCoke design to be used at MCC that may impact emissions. Key differences include:

Table 5-1

RBLC Database Search Results for BACT CO Limits at Nonrecovery Coke Facilities

RBLC ID	Facility Name	Last Updated	Process Name	Control Description	Pollutant	Emission Level	Efficiency
OH-0297	FDS Coke (heat recovery coke plant)	6/6/2008	Coke oven batteries (2) with 168 ovens, battery stack	Fabric filter	PM/PM_{10}	0.008 gr/dscf	99%
			Coke oven batteries (2), HRSG bypass (6)	NA	PM/PM_{10}	No standard limit	NA
			Coke oven batteries (2) with 168 ovens, charging	Fabric filter with traveling hood, oven negative pressure	PM/PM_{10}	0.008 gr/dscf	99%
			Coke oven batteries (2) with 168 ovens, pushing	Fabric filter with traveling hood, oven negative pressure, flat bed pushing	PM	0.03 lb/ton coal	NA
			Quench tower (2)	Internal baffles	PM/PM_{10}	No standard limit	NA
OH-0305	Haverhill North Coke Company (heat recovery plant)	6/23/2008	Batteries A&B, Charging	Baghouse with traveling hood	PM_{10}	0.0081 lb/ton	70%
			Batteries A&B, Pushing	Multiclone dust collector	PM_{10}	0.04 lb/ton	80%
			Batteries A&B, Coke oven batteries	Baghouse	PM_{10}	0.008 gr/dscf	99%
			Batteries A&B, HRSG bypass vent	Bypass of controls	PM_{10}	No standard limit	NA
			Batteries C&D, Charging	Baghouse with traveling hood	PM_{10}	0.0081 lb/ton	70%
			Batteries C&D, Pushing	Multiclone dust collector	PM_{10}	0.04 lb/ton	80%
			Batteries C&D, Coke oven batteries	Baghouse	PM_{10}	0.014 gr/dscf (with condensable PM)	99%
			Batteries C&D, HRSG bypass vent	By pass of controls	PM_{10}	No standard limit	NA
			Quench tower (2)	Quench tower is the control	PM/PM_{10}	No standard limit	NA
			Coke and breeze handling and processing	Baghouse	PM_{10}	0.008 gr/dscf	70%

Table 5-1

(Continued)

RBLC ID	Facility Name	Last Updated	Process Name	Control Description	Pollutant	Emission Level	Efficiency
None (not in RBLC database yet)	Gateway Energy and Coke Company (BACT Permit Limits for PM; LAER Permit Limits for PM_{10})	Permit issued 3/13/2008	Charging	Baghouse with traveling hood	PM/PM_{10}	0.016 lb/ton coal (0.008 lb/ton filterable)	NA
			Coking - Main stack	Baghouse	PM/PM_{10}	0.011 gr/dscf (0.008 gr/dscf filterable)	NA
			Coking - Waste heat stacks	Work practices	PM/PM_{10}	0.08 gr/dscf (0.049 gr/dscf filterable)	NA
			Pushing	Flat car push with multicyclone	PM/PM_{10}	0.08 lb/ton coke (0.04 lb/ton filterable)	NA
			Quenching	Baffles and cleaned water	PM_{10}	0.044 lb/ton coal	NA
			Coke crushing and screening	Enclosure and baghouse	PM/PM_{10}	0.008 gr/dscf (0.005 gr/dscf filterable)	NA
None	MCC (proposed in this application)	NA	Coal charging	Traveling hood with baghouse	PM/PM_{10}	0.0081 lb/dry ton coal (filterable)	90%
			Coking - Main stack	Lime spray dryer with baghouse	PM/PM_{10}	0.005 gr/dscf (filterable)	99%
			Coking - HRSG and SD/BH maintenance	Work practices	PM/PM_{10}	0.049 gr/dscf (filterable)	NA
			Coke pushing	Flat push hot car with multicyclone	PM/PM_{10}	0.04 lb/ton coke (filterable)	98%
			Coke quenching	Baffles, water with controlled TDS	PM	0.12 lb/ton coal (filterable)	NA
					PM_{10}	0.044 lb/ton coal (filterable)	NA
			Coke crushing and screening	Enclosure and baghouse	PM/PM_{10}	0.008 gr/dscf (filterable)	NA

BACT = Best Available Control Technology
dscf = dry standard cubic foot
HRSG = Heat Recovery Steam Generator
LAER = Lowest Achievable Emission Rate
MCC = Middletown Coke Company
NA = Not Applicable
PM = Particulate Matter
PM_{10} = Particulate matter less than 10 micrometers in diameter
RBLC = RACT/BACT/LAER Clearinghouse
SD/BH = Spray Dryer/Baghouse
TDS = Total Dissolved Solids

- The ovens are larger — designed to carbonize 67 tons of coal compared to 50 tons at MCC.
- Charging is to be accomplished by a stamped (compacted) coal cake with a very small air pollution control system [3,000 cubic feet per minute (cfm)].
- Coke is to be pushed as a coke cake with a small air pollution control system (9,500 cfm).

The only heat recovery coke ovens that are demonstrated in practice and that are operated in the United States are at SunCoke's facilities, and based on that experience, MCC has many technical questions about the design assumptions of the FDS facility that may affect emission limits. For example, the nominal flow rates for the SunCoke charging and pushing control systems are 45,000 cfm and 50,000 cfm, respectively. MCC believes, based on its experience, that the FDS pollution control systems are likely undersized and therefore emissions are likely underestimated.

In any event, as noted above, to the best of MCC's knowledge, the FDS heat recovery coke oven design, charging system, and pushing system have never been constructed or used anywhere in the world, and therefore the technology and limits for the FDS facility are not "achievable" since they have never been demonstrated, and cannot be considered BACT, BAT, or LAER for the MCC facility.

5.2.1 Coking

Coal is charged onto the oven floor at the beginning of the cycle. Heat from the hot refractory starts the carbonization cycle. No additional fuel is used. PM emissions from the heat recovery coke oven are partially controlled by combustion in the sole flues and in the common tunnel/afterburner. This occurs whether the gases are emitted from the waste heat stacks (during maintenance) or pass through the HRSGs to downstream air pollution controls.

5.2.1.1 Coking – Main Stack

A baghouse (used in conjunction with a spray dryer to control SO_2) is typically used as the primary PM/PM_{10} air pollution control device for heat recovery coking. Because the ovens are maintained under negative pressure, the capture efficiency is virtually 100%.

Fabric filtration has been widely applied to coal combustion sources since the early 1970s and consists of a number of filtering elements (bags) along with a bag cleaning system contained in a main shell structure incorporating dust hoppers. Collection efficiencies of fabric filters (baghouses) can be as high as 99.9%. Variability in overall control efficiencies associated with baghouses is due to the efficiency of the capture device (e.g., hood) used to route the air stream to the baghouse. Baghouses are technically feasible for the heat recovery coking process and related activities.

Electrostatic precipitation technology offers a control efficiency that is comparable to baghouses. ESP is a proven technology for a variety of coal combustion sources. Because of their modular design, electrostatic precipitators (ESPs), like baghouses, can be applied to a wide range of system sizes. The operating parameters that influence ESP performance include fly ash mass loading, particle size distribution, fly ash electrical resistivity, and precipitator voltage and current. Data for ESPs applied to coal-fired sources show fractional collection efficiencies greater than 99% for fine (less than 0.1 micrometer) and coarse particles (greater than 10 micrometers). These data show a reduction in collection efficiency for particle diameters between 0.1 and 10 micrometers. Other PM/PM_{10} air pollution control options (such as wet scrubbers and mechanical collectors) are technically feasible, but they are less efficient than baghouses and ESPs. A fabric filter offers the "top" or most effective control option for PM/PM_{10} from coking.

As previously discussed, at times the main air pollution control system cannot be used. First is during inspection and maintenance of the HRSGs. Second is for inspection and maintenance of the main air pollution control system. These are addressed in the following sections.

5.2.1.2 Coking – HRSG Maintenance

The individual waste heat stacks will be used during annual inspection and maintenance of each HRSG so that these procedures can be performed safely. The maximum time that will be required for maintenance and inspection of each HRSG is 10 days/year. During the scheduled maintenance, 20 ovens will vent waste gases directly into the atmosphere, bypassing the SD/BH/fabric filter system. These gases will still pass through the common tunnel afterburner system, which will fully combust the gases prior to release into the atmosphere. The remaining 80 ovens will continue to pass through the SD/BH.

It is not feasible to route the flue gases directly to air pollution controls during HRSG maintenance. The first consideration is temperature. The flue gas temperature is 1,800–2,400°F. For example, devices made of carbon steel are limited to temperatures of approximately 800°F and stainless steels are limited to approximately 1,500°F. The second consideration is the relatively small amount of pressure produced by the waste heat stacks (approximately 1 in. water column). It is likely that the particles are small and only a high-efficiency control device would be effective (e.g., a settling chamber or cyclone would be ineffective). A fan would be required to provide enough energy to move the flue gas through a high-efficiency device. The waste heat stacks are supported by the brick oven walls, so increasing the height of the stack to increase draft is not feasible. Therefore, the only options that could be considered for providing additional control during HRSG maintenance must provide for cooling the flue gases and a fan for overcoming the pressure drop inherent to any control device.

This section presents three potential options for controlling PM/PM_{10} from the individual waste heat stacks during the 10 days of maintenance on each HRSG. Additional equipment would theoretically allow the waste gases to be treated in the primary system. It should be noted that none of these options has been designed and implemented on any existing heat recovery battery. These represent fundamental design changes that have never been demonstrated in practice and are more restrictive than current LAER control levels. It is also important to note that these options propose to address maintenance activities – which are beyond the scope of a traditional BACT analysis. The three options are as follows:

- Spray quenches at each HRSG to cool individual waste heat gas,
- Larger HRSGs and very large waste heat tunnel, and
- Additional HRSGs and expanded waste heat tunnel.

5.2.1.2.1 Individual Spray Quenches

Waste gases from the ovens typically pass through the HRSGs, which cool the gases enough to be treated in downstream pollution controls. With an HRSG offline, the hot gases (greater than 1,800°F) are typically exhausted from the waste heat stacks. Spray quenches could be installed adjacent to the HRSGs so that during HRSG maintenance the hot gases could be routed through the spray quenches instead of the HRSGs where they could be cooled using water. In this option, water would be sprayed into the flue gas stream to cool the gas that usually goes through the HRSG so that it could then be routed to the existing collection duct and combined with the flue gases from the four operating HRSGs for treatment in the primary emission control system. The spray quench chamber would consist of a refractory lined entrance section; a cocurrent, down-flow tower; spray nozzles; control system; side discharge; and dry bottom. Water would be supplied to the spray quench for cooling at a variable rate to allow for cooling during the course of the facility operating cycle. This would require a system equipped with multiple banks of nozzles to supply the required turndown. Ash that collects in the spray quench would be discharged through a rotary valve located at the bottom of the quench chamber and collected in a bin for disposal with baghouse ash.

This system would require a sophisticated control system that can respond to process temperature swings. Spraying too much water would result in water in the ductwork and thermal shock to the refractory. Spraying too little water would result in high temperatures that could damage the ductwork and SD/BH. Catastrophic damage could result if the water spray system stopped completely while hot gases were going through the system. One example of such a situation would be a system power failure where the main fans continue to spin due to inertia and pull gases through the system. The fairly small water pumps would stop almost immediately, but the hot gas would continue to be pulled through the spray quench and into the steel ductwork. This could result in catastrophic damage. An additional issue is that the increased moisture in the gas stream will raise the acid dew point and increase corrosion in the ductwork and SD/BH.

This option has never been demonstrated with the heat recovery coking technology. Considering the obstacles of the complexity of the system design, increased corrosion, the consequences of deficient water rate, and the serious damage that would result from water failure, this option is not technically feasible.

5.2.1.2.2 Larger HRSGs and Very Large Waste Heat Tunnel

In this option, five HRSGs handle the waste gases from 100 ovens (20 ovens/HRSG). This option would allow one of the HRSGs to be shut down for maintenance by routing waste gases to the remaining four HRSGs. The waste gases from the 40 ovens in two batteries go to 2 HRSGs. The waste gases from the 20 ovens in the other battery go to 1 HRSG. To accommodate the shutdown of 1 HRSG, the other HRSG for the battery would need to be 100% larger to handle 40 ovens. This would not be an option for the battery with one HRSG.

There are two obstacles with this option. First, the HRSGs will be designed for flue gases from 20 ovens. If the HRSGs were sized to accommodate 40 ovens, the velocities through the HRSGs would only be in the design range for a few days a year. The lower velocities would reduce efficiency and promote buildup of particles. The larger surface area would also result in increased heat loss and further reduced efficiency.

The second obstacle is with the waste heat tunnel. The demonstrated design conveys gases from 10 ovens on either side of a “Tee” in the waste heat tunnel. With the 40 oven batteries — the gases go to 2 HRSGs. With one HRSG offline, the tunnel would have to be able to convey gases from 10 ovens on one side of the Tee and from 30 ovens on the other side of the Tee. Since pressure drop in a duct is a function of velocity squared, the pressure drop would be nine times higher on one side of the Tee. The demonstrated tunnel design would not be able to accommodate the resulting unbalanced draft. Enlarging the tunnel by a factor of three would maintain the same velocity during HRSG maintenance. There would still be an imbalance of draft on the other side of the “Tee.” Figure 2-1 illustrates the current design of the heat recovery coke oven. The gases from the crown travel down between the oven walls, travel through the sole flues to heat the floor, travel up between the walls into uptakes, and enter the common tunnel on each side. By reviewing Figure 2-1, it is obvious that to accommodate a common

tunnel three times as large would require redesigning not only the common tunnel but also the uptakes, oven walls, and sole flues. In addition, the common tunnel is designed to be supported by the oven walls, which would have to be redesigned to support the weight of a tunnel this large.

The key advantages of the heat recovery design from an emission standpoint are negative pressure and complete combustion (as evidenced by low CO and VOC values). The waste heat tunnel is a key component of the heat recovery design for final combustion and draft distribution. A very large waste heat tunnel would have more heat loss (due to larger surface area), and the velocity during typical operation would be much lower. This change would represent a major difference in the oven design and the effect on emissions is unknown. However, the additional heat loss and reduced turbulence in a very large common tunnel are likely to result in poorer combustion, which would affect emissions of VOCs, CO, and organic HAPs. Therefore, this option is not technically feasible.

5.2.1.2.3 Additional HRSGs and Expanded Waste Heat Tunnel

This option incorporates the largest tunnel that the ovens could accommodate with HRSGs to accommodate displaced gas when any one HRSG is taken offline. This option assumes that the HRSGs are the same size as those in the current design. The additional HRSGs would be equipped with ducting, dampers, and controls identical to the HRSGs planned for the current design. The limitations on tunnel size previously discussed require that the number of HRSGs be increased from five to eight, to allow any individual HRSG to be shut down without opening the waste heat stack. This option would require the redesign of the overall HRSG components in a way that has not been done on any other heat recovery process. As such there may be currently unknown technical issues and/or costs associated with such a redesign.

This option would require the following equipment:

- Expanded waste heat tunnel;
- Three additional common tunnel “Tees,” waste heat stacks, stack lids, and peripherals;
- Three additional HRSGs;

- Additional hot duct, isolation knife gates, and expansion joints; and
- Additional steel ductwork and flow control dampers.

The option for adding HRSGs allows the use of the same primary air pollution control system and, while it has never been designed and implemented, is considered theoretically feasible.

5.2.1.3 Coking – SD/BH Maintenance

The SD/BH system will be bypassed as part of routine, preventive maintenance program to promote optimum performance and maximum effective service life of all components. Since the ovens cannot be shut down, it is proposed that the amount of time allowed for the bypass of the system be restricted to 120 hours/year. The only option for completely controlling emissions during SD/BH maintenance would be to install a redundant SD/BH system. To the best of our knowledge, no heat recovery facilities have been required to install such a completely redundant control system capable of meeting the proposed emission limitations of the primary control system, nor is MCC aware of any other similar BACT assessment that required the evaluation of such a redundant system. However, if a redundant system were installed it would require:

- SD/BH with instrumentation and
- Steel ductwork with dampers.

Although its application has not been required for any other similar facilities, the option for installing a redundant SD/BH system is theoretically feasible.

5.2.1.4 Selection of BACT for PM/PM_{10} – Coking Process

This section presents those technologies that were identified as technically or theoretically feasible for controlling PM and PM_{10} emissions from coking. Since the coke ovens are designed to operate continuously once started, it is not feasible to shut down the units for maintenance. Therefore there are periods of time during HRSG and SD/BH maintenance that emissions must bypass the control systems. HRSG maintenance requires 50 days/year (10 for each HRSG with 80% of the ovens controlled) and SD/BH maintenance requires 5 days/year.

5.2.1.4.1 Top-Down Evaluation of Technically Feasible Controls – PM/PM_{10}, Primary System

This section presents the top-down evaluation of controls from the primary system. The options for treatment of planned emissions during maintenance include the combination of these emissions with those treated in the primary system or the treatment of these emissions via redundant control technologies. For this reason, the evaluation of controls for the treatment of planned emissions from maintenance activities is presented separately in Section 5.2.1.4.2 using the results of the selected control as presented in this section.

Generic control efficiencies for typical PM devices are listed in Table 5-2. This hierarchy also applies to PM_{10} and $PM_{2.5}$. Therefore, the top PM control systems for the MCC coking process are fabric filters and electrostatic precipitators. Consideration should also be given to the fact that the complete control system must also control SO_2 emissions from the process. Control options that are available and present similar levels of control for SO_2 include dry scrubbing and wet scrubbing. The dry scrubber is the preferred option, due to its manageable waste stream. The calcium sulfite ($CaSO_3$), calcium sulfate ($CaSO_4$), and unreacted lime solid wastes can be disposed of in a nonhazardous solid waste landfill or used for acid mine water neutralization. The wet scrubber, however, generates both solid waste and a liquid waste stream containing soluble sulfur-containing salts. This liquid waste stream would require treatment either on-site or at the publicly-owned treatment works. Thus, not only is an additional waste stream generated, but additional energy requirements and costs (e.g., piping and treatment costs) result from the need to treat this additional waste stream.

Table 5-2

Typical PM Control Efficiencies for Air Pollution Control Devices

Device	Efficiency
Mechanical collector (e.g., multicyclone)	70%
Low energy wet scrubber	60%
High energy wet scrubber	97%
Electrostatic precipitator	99+%
Fabric filter (baghouse)	99+%

Reference: Information on particulate control devices in *Air Pollution Engineering Manual* (Air and Waste Management Association 2000).

Use of a spray dryer, with the final filtering being either a baghouse or ESP, provides better PM controls than wet scrubbing. For PM/PM_{10} controls, as noted in Section 5.2.1.1, data for ESPs applied to coal-fired sources show fractional collection efficiencies greater than 99% for fine (less than 0.1 micrometer) and coarse particles (greater than 10 micrometers). These data show a reduction in collection efficiency for particle diameters between 0.1 and 10 micrometers. Although ESPs, wet scrubbers, and mechanical collectors are technically feasible, fabric filters offer the "top" or most effective control option and will be the technology considered as BACT. This is also the technology that has been identified as LAER in Section 8.0 for $PM_{2.5}$ control.

5.2.1.4.2 Top-Down Evaluation of Theoretically Feasible Controls – PM/PM_{10}, HRSG and SD/BH Maintenance

This section presents an evaluation of additional PM/PM_{10} controls during the 10 potential days of annual maintenance on each HRSG and from the main stack during the 5 days of maintenance on the SD/BH system. The options incorporate additional equipment to allow the waste gases to be treated during these periods. While these options have been identified as theoretically feasible, they have not been designed and implemented in practice and are considered to be controls beyond those that would be required as LAER.

Following the "top-down" BACT approach, the highest ranked control technology or combined technology option that is technically feasible is evaluated further for BACT. If this option is economically feasible and does not have unacceptable energy and/or adverse environmental impacts, the option is deemed BACT. Otherwise, the next ranked control option is evaluated. This evaluation process continues until a control option is found that meets all the BACT requirements. Once an option is determined as BACT, it is unnecessary to evaluate any remaining options.

The assumptions used in determining economic, energy, and environmental impacts for the technically feasible control options in this BACT analysis for MCC are consistent with the methodology used in EPA's *New Source Review Workshop Manual* (EPA 1990), *Estimating Costs of Air Pollution Control* (Vatavuk 1990), *EPA Air Pollution Control Cost Manual* (EPA

2002), and *Guidance for Estimating Capital and Annual Costs of Air Pollution Control Systems* (Ohio EPA 1983).

In the case of PM/PM_{10} controls for HRSG and SD/BH maintenance, the control options present similar removal efficiencies. Table 5-3 presents those technologies that were identified as theoretically, feasible for controlling emissions during maintenance. This table also summarizes the expected emission levels associated with these controls. The costs and estimating methodology contained in the EPA *Air Pollution Control Cost Manual* are directed toward the "study" estimate of ±30% accuracy, as opposed to an "order-of-magnitude" estimate (less accurate), a "budget authorization" estimate (more accurate), a "definitive" estimate (very accurate), or a "firm" or "contractor's" estimate (most accurate). EPA's Manual states,

> Study-level estimates are acceptable for regulatory development because they represent a compromise between the less accurate order-of-magnitude and the more accurate estimate types. The former is too imprecise to be of much value, while the latter are not only very expensive to make, but require detailed site and process-specific knowledge that most Manual users will not have. (p. 2-4)

Table 5-3

Theoretically Feasible Controls for PM/PM_{10} Reductions During Maintenance

Control Technology	Control Level for BACT Analysis	Expected Emission Level (tons/year)
Option for HRSG maintenance		
Addition of HRSGs and expanded waste heat tunnel	0.005 gr/dscf	1.3
Uncontrolled baseline	0.049 gr/dscf	12.6
Option for SD/BH maintenance		
Redundant SD/BH system	0.005 gr/dscf	0.6
Uncontrolled baseline	0.049 gr/dscf	6.3

BACT = Best Available Control Technology
dscf = dry standard cubic feet
HRSG = Heat Recovery Steam Generator
PM = Particulate Matter
PM_{10} = Particulate Matter less than 10 micrometers in diameter
SD/BH = Spray Dryer/Baghouse

This cost estimate is a factored cost estimating method. Equipment costs were obtained from vendor quotes. Installation, indirect, and operating costs were derived through factors that were applied against the estimated capital cost of equipment. The cost factors that were used for evaluating PM/PM_{10} control options are provided in Appendix D, along with the calculations

used to evaluate the options. These cost factors were taken from Ohio EPA Engineering Guide 46, EPA *Air Pollution Control Cost Manual* (2002), and *Estimating Costs of Air Pollution Control* (Vatavuk 1990).

5.2.1.4.3 Economic Impacts

The costs for this analysis were calculated in annualized dollars per year, and the emission rates were calculated in tons per year. The result is a cost-effectiveness number in dollars per ton of pollutant removed. In establishing the baseline emissions that are used to calculate the amount of pollutants removed, emissions from the lower polluting process were used. EPA's *New Source Review Workshop Manual* (1990) states,

> When calculating the cost effectiveness of adding post process emission controls to certain inherently lower polluting processes, baseline emissions may be assumed to be the emissions from the lower polluting process itself. In other words, emission reduction credit can be taken for use of inherently lower polluting processes. (p. B.37)

The baseline emissions for HRSG maintenance were established at 12.6 tons/year PM/PM_{10}, which is equivalent to the emissions from all five waste heat stacks over five 10-day periods of operation. The baseline emissions for SD/BH maintenance were established at 6.3 tons/year PM/PM_{10}, which is equivalent to the maximum potential uncontrolled emissions for 5 days. These are the total potential PM/PM_{10} emissions that could occur during maintenance and inspection of the HRSGs and the SD/BH system.

Table 5-4 summarizes the economic impacts. Appendix D provides details on the calculation of values presented. All the options would be very expensive. The capital cost of HRSG maintenance control was $36,026,000 and the cost-effectiveness was $538,000 per additional ton of PM/PM_{10} removed.

The option for controlling emissions during SD/BH maintenance was a redundant SD/BH system. This option would be even more expensive. The capital cost of this additional control

Table 5-4

Summary of Top-Down BACT Impact Analysis Results for PM/PM_{10} for Maintenance Emissions

Control Alternative	Emissions		Economic Impacts			Environmental Impacts		Energy Impacts
	Emission Rate (tons/year)	Emission Reduction (tons/year)	Installed Capital Cost	Total Annualized Cost	Cost-Effectiveness ($/ton)	Toxics Impact (yes/no)	Adverse Environmental Impacts (yes/no)	Incremental Increase Over Baseline (MW-hour/year)
Options for HRSG maintenance								
Addition of HRSGs and expanded waste heat tunnel	1.29	11.31	$36,026,000	$6,092,000	$538,000	No	No	None
Uncontrolled baseline	12.60	—	—	—	—	—	—	—
Option for SD/BH maintenance								
Redundant SD/BH system	0.64	5.66	$44,152,000	$6,149,000	$1,087,000	No	No	471
Uncontrolled baseline	6.30	—	—	—	—	—	—	—

BACT = Best Available Control Technology
HRSG = Heat Recovery Steam Generator
PM = Particulate Matter
PM_{10} = Particulate matter less than 10 micrometers in diameter
SD/BH = Spray Dryer/Baghouse

was $44,152,000 and the cost-effectiveness was $1,087,000 per additional ton of PM/PM_{10} removed.

5.2.1.4.4 Environmental Impacts

The primary environmental impact of the proposed options is the further reduction in PM, PM_{10}, and SO_2 emissions as they relate to the NAAQS and PSD increments. There is currently no NAAQS or PSD increment established for PM, but there is for PM_{10} and SO_2. As shown in Section 6.0 of this application, the NAAQS, PSD increments, and Ohio one-half PSD increment for PM_{10} and SO_2 are all protected through the application of the proposed BACT requirements. Beyond these direct air quality impacts, no other significant environmental impacts were identified.

5.2.1.4.5 Energy Impacts

Application of the spray quench option or the redundant SD/BH system would require an increase in plant energy usage. This is either in the form of electricity associated with pumping, atomization air production, or increased fan power associated with increased flow. The energy impact of the option for the addition of HRSGs has no increased energy usage.

5.2.1.5 PM/PM_{10} Top-Down BACT Summary – Coking

A baghouse, the top option, was selected as BACT for the primary system for control of PM/PM_{10}. The level of control is more stringent than recent BACT determinations listed in the RBLC database and is also proposed to meet the requirement for LAER for $PM_{2.5}$ control in Section 8.0.

With a cost-effectiveness of $538,000–$1,087,000/ton of additional PM/PM_{10} removed, all options for controlling emissions during HRSG or SD/BH maintenance are cost prohibitive. The use of the proposed controls without the additional options for controls during maintenance periods is still protective of the NAAQS, PSD increment, and Ohio one-half PSD increment. These options also have additional energy impacts. Therefore, all add-on equipment options to

control emissions during HRSG and SD/BH maintenance were rejected. BACTs for controlling PM/PM_{10} emissions during maintenance are:

- Minimizing emissions from waste heat stacks during HRSG inspection and maintenance by bringing only one HRSG offline at a time so that 80% of the waste gases will go through the primary system;
- Limiting HRSG maintenance to no more than 2.7% of the operating hours (10 days/year/HRSG);
- Limiting SD/BH inspection and maintenance to no more than 1.4% of the operating hours (5 days/year) by using appropriate personnel and scheduling the work to be performed in the shortest possible time; and
- Overall, treating 96% of the waste gases generated by the ovens in the SD/BH system.

5.2.2 Charging

Oven charging takes approximately 4 minutes. Air flows into the oven through the open door during charging, and virtually all the charging emissions are captured and sent to the sole flues and common tunnel during the first 3 minutes. During the last minute, as the ram retracts, some of the charging emissions escape the oven. A traveling hood and baghouse control these emissions. As previously discussed, a baghouse is generally recognized as a "top" control device for PM/PM_{10} and was identified as LAER for $PM_{2.5}$ control. These controls are consistent with the MACT standards for charging nonrecovery coke oven batteries in 40 CFR 63, Subpart L, National Emission Standards for Coke Oven Batteries.

5.2.3 Coke Crushing and Screening

For the coke crushing and screening operations, a baghouse is used as the control device. These operations are performed within an enclosed building. As previously discussed, a baghouse is generally recognized as a "top" control device for PM/PM_{10}.

5.2.4 Pushing

Flat car pushing will be used to remove the coke from the oven at the end of the cycle. Flat car pushing is much different than conventional pushing. With conventional pushing, the coke bed falls into a hot car where it breaks apart and produces the traditional large hot pushing plume. The plume may be collected by either a mobile shed or by a large stationary coke side shed. With flat car pushing, the coke bed is pushed onto a flat car with a hood that encloses the bed on the sides and top. Air from this hood is ducted to an air pollution control device, fan, and stack on a mobile car. The hood and air pollution control device will travel from the oven to the quench tower. The coke bed will be transferred, intact, to a quench car and quenched in a conventional wet quench tower. The advantage of flat car pushing is that the coke bed stays intact and there is no large thermal plume, and therefore, PM and PM_{10} emissions are minimized.

Worker safety is also improved in several ways with the flat car push. With flat car pushing, visibility is improved since operators are not working inside a dark shed. With a zero fall height, operators do not have to work on an elevated bench. Without the large thermal plume, operators are less exposed to emissions and heat.

The air pollution control device used with flat car pushing must be chosen with two considerations. First, a close-capture hood will be used. The coke bed is approximately 2,000°F, and at times the gases exiting the hood will be extremely hot. Second, the mobile system must be short enough to pass below the hot ducts that take the gases from the common tunnel to the HRSGs (approximately 20 ft) and narrow enough to fit on a rail car.

The air pollution control device must also meet the PM emission limit in the MACT for pushing, quenching, and battery stacks (40 CFR 63, Subpart CCCCC). The limit is 0.04 lb PM/ton coke for filterable PM if a mobile control device that captures emissions during travel to the quench tower is used.

5.2.4.1 Belt-Sealed Ducts

Moveable hoods that use a belt-sealed duct to convey pushing emissions to a stationary pollution control device are commonly used at byproduct facilities. However, a belt-sealed duct system is not feasible for a heat recovery facility because (1) the moveable hood height must be shorter than the hot ducts, (2) a heat recovery battery is much longer than a byproduct battery (at least twice as long), and (3) high-temperature excursions associated with a close-capture hood would ultimately destroy the belt. Belt-sealed ducts are not feasible for heat recovery batteries that use flat car pushing.

5.2.4.2 Fabric Filters

A fabric filter, or baghouse, removes dust by passing the gas stream through a porous fabric. Many natural and synthetic fabrics are used. Most baghouses used to control pushing emissions use polyester bags. Polyester bags have a temperature limit of approximately 275°F. The fabrics most often used for high-temperature applications are Teflon, Nomex, carbon fibers, and fiberglass. Fiberglass can be used at temperatures up to 500°F. Ceramic and metal filters have been used in a few high-temperature specialty applications, but with the large surface area needed for this type of application, they are not practical. A baghouse system could be designed to cool the gases to 500°F. However, even a short temperature excursion would destroy the bags. The high temperature and the potential for high-temperature excursions are technical hurdles for using a baghouse in this application. Another consideration is that, since the hot car and its air pollution control device will travel to the quench tower, it will periodically catch water droplets and steam, which typically cause bag blinding.

Baghouses are typically large air pollution control devices because, in order to work effectively, the velocity at the fabric face must be orders of magnitude slower than in the ductwork conveying the gases to the baghouse. Another obstacle is designing a baghouse system that is physically short enough to pass below the hot ducts, narrow enough to fit on a rail car, and mobile. With the gas temperature, moisture, and size constraints, a baghouse is not a technically feasible choice for this application. While a baghouse has been proposed for use at the FDS

facility it has not been demonstrated in practice and for the reasons previously stated is not considered technically feasible.

5.2.4.3 Electrostatic Precipitators

An ESP charges particles in a gas stream so that they are attracted to, and collected by, neutral or oppositely charged collector plates. A major factor in the performance of an ESP is resistivity of the particles – it must be within a certain range. With high resistivity, it is difficult to charge the particles. With low resistivity, the particles are not held tightly to the collector plates and reentrainment can be severe. Resistivity is strongly affected by temperature, moisture, gas composition, particle composition, and surface characteristics. The resistivity of pushing emissions from heat recovery coking is unknown.

High temperatures are not as much of an obstacle with ESPs as with baghouses since ESPs are usually constructed of metal. As with baghouses, ESPs are typically large because the gas stream velocity traveling through the ESP must be low enough to avoid reentrainment. Another difficulty is designing a system that is physically short enough to pass below the hot ducts, narrow enough to fit on a rail car, and mobile. An ESP is not a technically feasible choice for this application.

5.2.4.4 Wet Scrubbers

Wet scrubbers collect particles by contacting or scrubbing gases with a liquid, usually aqueous. The primary removal mechanisms are inertial impaction and Brownian diffusion. To be effective on small particles, wet scrubbers must produce a high pressure drop. For a heat recovery system, this would require a large motor (at least 700 hp). The design of a heat recovery battery prevents mounting and supplying power to such a large motor on the hot car track. Stationary systems have generally replaced mobile scrubber cars at byproduct facilities because of the size and complexity of the wet systems.

Another obstacle with wet scrubber systems is handling and disposal of the collected wet sludge. One advantage of the heat recovery technology over the byproduct technology is that

there is no wastewater to discharge. Use of a wet scrubber would not only require a wastewater treatment system but would add something new to the technology – the need for a wastewater discharge. Other concerns include the effect on materials and worker safety from the low-level release of a hot saturated plume. Therefore, a wet scrubber is not a technically feasible option for a heat recovery facility.

5.2.4.5 Mechanical Collectors

Mechanical collectors use inertial separation to remove particles from gas streams. Large cyclones are generally not very efficient on small particles because the inertial force is inversely proportional to the diameter (or turning radius) of the device. Cyclones are optimized for high collection efficiency by using small diameters, long cylinders, and high inlet velocities. A number of small cyclones may be operated in parallel for high efficiency and large gas volumes. These are referred to as multi-tube cyclones, or multicyclones. High temperatures are not as much of an obstacle with mechanical collectors since they are typically constructed of metal. Multicyclones can tolerate moist gas streams. Since the individual cyclones are small, a multicyclone can be configured to meet the size criteria of the heat recovery battery. A multicyclone is a feasible option for flat car pushing.

5.2.4.6 BACT Selection for Pushing

A multicyclone is the only air pollution control device that is technically feasible considering the hot gases from the close-capture hood, ability to handle moisture, and size constraints of the heat recovery coke oven design. Flat car pushing with a multicyclone is appropriate from an environmental perspective since it will result in a 98% reduction in uncontrolled PM/PM_{10} emissions from conventional pushing using pollution prevention and a multicyclone. These controls are protective of the NAAQS, PSD increment, and Ohio one-half PSD increment. Flat car pushing will meet the emission limit of 0.04 lb PM/ton coke for filterable PM in the MACT standard.

The MACT standards also require the work practice of physically looking into each oven prior to pushing. This is possible because of the negative pressure design. If the coke bed has

stopped gassing and no smoke is observed, the oven is deemed coked out and can be pushed.

5.2.5 Quenching

Conventional wet quenching is the most common quenching technique used in the coke industry and is accomplished by directly cooling a hot car of coke with a deluge of water. In other countries (e.g., Japan and Russia), some facilities use a dry quenching process.

5.2.5.1 Dry Quenching

In the dry quenching process, 2,000°F coke is lifted and dumped into the top of stationary vessels. Coke descends to the bottom over several hours before discharging at 200–300°F. The coke is cooled by recirculated nitrogen gas traveling from the bottom to the top of the vessel. The heated nitrogen gas then enters an HRSG, followed by a "dedusting" system and fan before reuse in the dry quench vessel. The dry quench process provides the opportunity to recover heat from the hot coke in the form of steam. Although no water is consumed in the process, nitrogen losses must be replaced.

The dedusting system may be controlled with a baghouse. Fugitive emissions are much higher with dry quenching because the material handled is dry.

The capital and operating costs of dry quenching systems are substantial.

5.2.5.2 Wet Quenching

In the wet quenching process, water is used to cool the 2,000°F coke. The intact coke bed from the flat push is moved directly into the quench tower where water is dumped onto it. A portion of the water evaporates and travels upward through a tower before exhausting to the atmosphere. The majority of the water used for quenching drains from the hot car into a settling basin where solids settle out and are periodically dredged from the basin. Water from the settling basin is recirculated to the quench tank and used in subsequent quenches. Make-up water must be added to the basin to replace evaporative losses. In addition, dissolved solids from the quench

water may become entrained in the steam plume rising from the tower. The typical control is to install baffles in the quench tower to reduce these emissions. SunCoke uses an improved baffle design – bent steel plates approximately 2 in. apart that impart tighter "turns" to the gas stream compared to conventional rows of wood baffles. This will reduce PM compared to conventional baffles. Another "control" is to use clean water instead of "dirty" water (i.e., water high in solids or other pollutants) to quench the coke.

These controls are consistent with the MACT standards for quenching in 40 CFR 63, Subpart CCCC, NESHAPs for Coke Ovens: Pushing, Quenching, and Battery Stacks; Final Rule.

5.2.5.3 BACT Selection for Quenching

One advantage of the SunCoke technology is the use of flat push to remove coke from the oven. The coke is not tumbled into a hot car prior to quenching. From a product standpoint, the heat recovery technology with flat push produces coke that has significant advantages of stability and blast furnace efficiency. It is unknown what the effect would be of dumping the flat bed into the buckets used to transport the coke to the dry quench vessel. Therefore, the technical feasibility of dry quenching with the heat recovery coking and flat push technology is unknown.

The dedusting vent in a dry quench may be controlled with a baghouse. However, the overall environmental impacts are not clear since fugitive emissions are likely to be much higher with dry quenching due to handling dry materials and the multiple transfer operations required to place the coke into the dry quench vessel.

SunCoke obtained cost estimates for a dry quench system that could quench 170 tons of coke per hour. The capital cost of the systems range from $47,000,000 to 65,000,000 with an operating cost of $2,700,000/year. These costs compare to a capital cost of a wet system of $2,000,000 with an operating cost of $125,000/year. The cost differences are potentially higher since the proposed schedule at MCC is 270 tons of coke per hour.

Although dry quenching systems may be operated safely, wet quenching is inherently safer because there is no possibility for a gas explosion (due to incompletely carbonized coke) or worker exposure due to ground level releases of CO.

Although dry quench systems can be operated reliably, they are typically built with wet quench backup systems. Wet quench systems are more reliable and require no backup system.

The quenching process used at all facilities in the United States, a wet system with baffled tower and water with controlled TDS, was selected as BACT. The use of a wet quench system is protective of the NAAQS, PSD increment, and Ohio one-half PSD increment. The dry quench system was rejected because all aspects of technical feasibility are unknown, the environmental advantage is questionable, and the cost is much higher.

5.2.6 Selection of BACT for PM/PM_{10}

The proposed BACT requirements for PM/PM_{10} are summarized in Table 5-5. The proposed BACT level of control is consistent with the level of control determined as LAER for $PM_{2.5}$ in Section 8.0. The proposed limits will also meet the MACT requirements for PM control. The application of these controls will be protective of the NAAQS, PSD increment, and Ohio one-half PSD increment as demonstrated in Section 6.0 of this application. Additional options for controlling emissions during periods of maintenance on the HRSGs and the SD/BH unit have never been required for any other heat recovery batteries, have not been demonstrated in practice, and are either technically or economically infeasible. The proposed BACT limits are for filterable PM/PM_{10} only.

No substantial energy or environmental impacts result from the application of these control technologies.

Table 5-5

Summary of Recommended BACT for PM/PM_{10} Control

Control Technology	Proposed PM Limit	Proposed PM_{10} Limit
Fabric Filter on Waste Gas Stream (Coking Process)	0.005 gr/dscf	0.005 gr/dscf
Optimize Combustion (Coking Process during HRSG Maintenance)	0.049 gr/dscf	0.049 gr/dscf
Flat Car with Multicyclone for Pushing	0.04 lb/ton coke	0.04 lb/ton coke
Oven Negative Pressure + Fabric Filter with Traveling Hood for Charging	0.0081 lb/ton dry coal	0.0081 lb/ton dry coal
Fabric Filter for Coke Crushing/Screening	0.008 gr/dscf	0.008 gr/dscf
Baffles and Water With Controlled TDS for Quenching	0.12 lb/ton coal	0.044 lb/ton coal

BACT = Best Available Control Technology
dscf = dry standard cubic foot
HRSG = Heat Recovery Steam Generator
PM = Particulate Matter
PM_{10} = Particulate matter less than 10 micrometers in diameter
TDS = Total Dissolved Solids

5.2.7 BACT Selection for Fugitive Particulate Matter

Fugitive PM emissions will be produced from coal unloading, coal processing and storage, coke handling and storage, and coke load-out. These emissions represent approximately 10% of the total PM/PM_{10}. MCC evaluated measures to control PM from the coal piles in the RBLC database for coal-fired boilers and coke plants and for all coal piles in the Ohio EPA BAT database. The measures proposed for MCC, a berm for wind reduction and wet suppression to control moisture, were as stringent as any found in those databases as of March 2009. PM emissions will be controlled as shown in Table 5-6. These control technologies are considered BACT, BAT, and LAER.

Table 5-6

BACT and BAT for Fugitive PM

Emission Unit	Control Technology
Coal unloading	Enclosure, wet suppression
Coal piles	Berm around piles, radial stacker, wet suppression
Blended coal storage	Enclosed silo
Coal conveyors	Enclosed (except where prohibited for safety), wet material
Coal crushing	Enclosure of rotary crusher, wet material
Coke conveyors	Enclosed (except where prohibited for safety), wet material
Coke crushing/screening	Enclosure, fabric filter
Coke pile	Stacker conveyor load-in, load-out with front-end loader, wet material
Roadways	Paving, watering as needed

BACT = Best Available Control Technology
BAT = Best Available Technology
PM = Particulate Matter

5.3 Carbon Monoxide for Coking and Related Activities

Consistent with the "top-down" methodology, CO controls were evaluated in the BACT analysis for the coking process and related activities (e.g., charging and pushing). Two BACT determinations were identified for heat recovery coke ovens in the RBLC database and are presented in Table 5-7.

CO is produced as a product of incomplete combustion. Although a BACT analysis of VOCs is not required, this discussion applies to VOCs due to the similarity in approach for control of these emissions during the coking process and related activities. CO and VOC emissions are potentially generated during the conversion of coal to coke and during pushing activities. The concentrations of CO and VOCs are less than 5 parts per million (ppm) in the charging emissions. No additional controls are technically feasible for charging.

5.3.1 Coking Emissions

In a byproduct coke oven, the volatile fraction of coal is recovered instead of burned. In the heat recovery process, volatile matter is released from the coal bed and combusted within the coke oven. Heat that is generated drives the coking process. The design of the heat recovery process is to have complete combustion and thereby release all the available heat. This approach naturally produces low emissions of CO and VOCs. The gases remain in the sole flues and common tunnel approximately 7 seconds where they are exposed to oxidizing conditions and temperatures from 1,600 to 2,500°F. HRSG maintenance and SD/BH maintenance have no effect on CO and VOC emissions. The emissions are the same whether exhausted from the main stack or the vent stacks.

These operations will also meet MACT for HAPs. Specific requirements for heat recovery batteries are 0% leaks for doors and daily monitoring of negative pressure in each oven or in a common battery tunnel. As previously discussed, the heat recovery coke ovens proposed for MCC will be operated under negative pressure. This will meet the requirements of the MACT

Table 5-7

RBLC Database Search Results for BACT CO Limits at Nonrecovery Coke Facilities

RBLC ID	Facility Name	Last Updated	Process Name	Control Description	Emission Level	Efficiency
OH-0297	FDS Coke	6/6/2008	Coke oven batteries (2) with 168 ovens, battery stack	Combustion optimization	20 ppm	NA
			Coke oven batteries (2), HRSG bypass (6)	NA	No standard limit	NA
			Coke oven batteries (2) with 168 ovens, charging	NA	No standard limit	NA
			Coke oven batteries (2) with 168 ovens, pushing	Work practices	No standard limit	NA
OH-0305	Haverhill North Coke Company	6/23/2008	Batteries A&B, charging	Combustion optimization	0.0028 lb/ton	NA
			Batteries A&B, pushing	Combustion optimization	0.077 lb/ton	NA
			Batteries A&B, coke oven batteries	Combustion optimization	20 ppm	NA
			Batteries A&B, HRSG bypass vent	Bypass of controls	No standard limit	NA
			Batteries C&D, charging	Combustion optimization	0.0028 lb/ton	NA
			Batteries C&D, pushing	Combustion optimization	0.077 lb/ton	NA
			Batteries C&D, coke oven batteries	Combustion optimization	20 ppm	NA
			Batteries C&D, HRSG bypass vent	Bypass of controls	No standard limit	NA
None (not in RBLC database yet)	Gateway Energy and Coke Company	Permit issued 3/13/2008	Coking	Combustion optimization	No standard limit - based on 20 ppm	NA
			Coking - Waste heat stacks	Combustion optimization	No standard limit - based on 20 ppm	NA
			Pushing	Work practices	No standard limit - based on 0.063 lb/ton coal	NA
None	MCC (proposed in this application)	NA	Coking - Main stack	Combustion optimization	20 ppm	NA
			Coking - HRSG and SD/BH maintenance	Combustion optimization	20 ppm	NA
			Coke pushing	Work practices	0.063 lb/ton coal	NA

BACT = Best Available Control Technology
CO = Carbon Monoxide
HRSG = Heat Recovery Steam Generator
MCC = Middletown Coke Company
NA = Not Applicable
ppm = parts per million
RBLC = RACT/BACT/LAER Clearinghouse
SD/BH = Spray Dryer/Baghouse

rule and is also the method to ensure the 0% door leakage standard is met. HRSG maintenance has no effect on oven pressure. The ovens will operate under negative pressure in either case.

The destruction of VOCs and CO is expected to be in the 98–99% range for the coke ovens. This destruction is inherent to the coking process, which aims to liberate all heat within the oven.

5.3.2 Pushing Emissions

An advantage of the heat recovery coking process is that "green" pushes can virtually be eliminated. Green pushes result when coke is pushed that has not been fully carbonized. The uncarbonized material ignites when the oven is pushed. Standard work practice for heat recovery coke ovens is for the operator to look in the oven to determine whether carbonization is complete prior to pushing the oven. When carbonization is complete, the operator can clearly see the door on the opposite side of the oven. This is only possible with a negative pressure design. This same mechanism also ensures minimal CO emissions.

These controls are consistent with the MACT standards for pushing in 40 CFR 63, Subpart CCCC, NESHAP for Coke Ovens: Pushing, Quenching, and Battery Stacks; Final Rule.

5.3.3 Selection of BACT and BAT for CO

In the case of CO and VOC controls for the MCC coking process, the "top" technically feasible options are combustion optimization for waste gases and work practices for pushing. These control technologies are precombustion controls to prevent CO and VOC formation. The economic impacts of these control alternatives are negligible since combustion optimization and the work practice for observing the oven are inherent to the heat recovery process. As shown in Section 6.0 of this application the CO emissions will have a very small impact on air quality levels (less than 1% of the Ohio one-half PSD increment level and below the PSD air quality *de minimis* threshold).

5.4 SO_2 from Coking and Related Activities

Consistent with the "top-down" methodology previously discussed, SO_2 controls were evaluated in the BACT analysis for the coking process and related activities (e.g., charging and pushing).

As previously stated, the types of air pollution control systems used for coal-fired utility boilers might theoretically be used for heat recovery coke ovens. However, there are differences in the nature of the process and flue gas characteristics that prevent direct comparison of performance. The heat recovery flue gas is unique. It does not contain the light coal fly ash of a coal-fired boiler. The particulate loading in heat recovery coke oven flue gases is low due to the inherently excellent combustion. However, with little alkaline fly ash to adsorb HCl, chloride salts form in air pollution control devices. Coal fly ash is light and stays suspended, whereas calcium chloride is sticky and easily forms deposits. The air pollution control system for heat recovery coke ovens must be operated to minimize deposition of chloride salts. Also, coke ovens cannot be shut down without causing severe damage to the ovens. This is not the case with utility boilers, which can be routinely shut down if problems develop in the air pollution control system. Because of the uniqueness of this application, BACT determinations in the RBLC database were restricted to those for heat recovery coke ovens. Two BACT determinations were identified and are presented in Table 5-8.

As previously discussed, the FDS Coke Plant has a different design and has not been constructed. Consequently, the technology and limits for the FDS facility are not demonstrated and do not represent BACT, BAT, or LAER for the MCC facility.

5.4.1 Coking

The primary sources of sulfur oxide emissions are the waste heat gases. Sulfur from the coal is oxidized to SO_2 and SO_3. Most of the sulfur oxides are SO_2, with about 5% or less as SO_3. Systems that control SO_2 also control SO_3. Consequently, the focus of this section is on SO_2.

Table 5-8

RBLC Database Search Results for BACT SO_2 Control at Nonrecovery Coke Facilities

RBLC ID	Facility Name	Last Updated	Process Name	Control Description	Emission Level	Efficiency
OH-0297	FDS Coke (heat recovery coke plant)	6/6/2008	Coke oven batteries, (2) with 168 ovens, battery stack	Lime spray dryer, low sulfur coal, combustion optimization	1.06 lb/ton	91%
			Coke oven batteries, (2), HRSG bypass (6)	NA	No standard limit	NA
			Coke oven batteries, (2) with 168 ovens, charging	NA	No standard limit	NA
			Coke oven batteries, (2) with 168 ovens, pushing	NA	No standard limit	NA
OH-0305	Haverhill North Coke Company (heat recovery coke plant)	6/23/2008	Batteries A&B, charging	Low sulfur coal <1%[a]	0.0003 lb/ton	NA
			Batteries A&B, pushing	Low sulfur coal <1%[a]	0.05 lb/ton	NA
			Batteries A&B, coke oven batteries	Dry scrubber with wet lime spray injection and low sulfur <1% coal[a]	1.6 lb/ton	92%
			Batteries A&B, HRSG bypass vent	Bypass of controls	No standard limit	NA
			Batteries C&D, charging	Low sulfur coal <1%[a]	0.0003 lb/ton	NA
			Batteries C&D, pushing	Low sulfur coal <1%[a]	0.05 lb/ton	NA
			Batteries C&D, coke oven batteries	Dry scrubber with wet lime spray injection and low sulfur <1% coal[a]	1.6 lb/ton	92%
			Batteries C&D, HRSG bypass vent	Bypass of controls	No standard limit	NA
None (not in RBLC database yet)	Gateway Energy and Coke Company	Permit issued 3/13/2008	Charging	Work practices	No standard limit - based on 0.0003 lb/ton coal	NA
			Coking - Main stack	Lime spray dryer	227.7 lb SO_2/hour (30-day rolling average)	90%
			Coking - Waste heat stacks	Work practices	No standard limit - based on 18.2 lb SO_2/ton coal	NA
			Pushing	Work practices	No standard limit - based on 0.098 lb/ton coal	NA

Table 5-8
(Continued)

RBLC ID	Facility Name	Last Updated	Process Name	Control Description	Emission Level	Efficiency
None	MCC (proposed in this application)	NA	Coal charging	Work practices	0.0003 lb/ton coal	NA
			Coking - Main stack	Lime spray dryer with baghouse	Design for 1.54 lb/ton coal (annual average)	92%
			Coking - HRSG maintenance	Work practices	Based on 23.92 lb/ton coal	NA
			Coking - SD/BH maintenance	Work practices	1,794 lb/hour (28% reduction based on minimizing coal production and coal sulfur)	NA
			Coke pushing	Work practices	Based on 0.098 lb/ton coal	NA

[a] Haverhill PTI (07-00511) limits coal sulfur to 1.3% (or higher sulfur with adjusted operating procedures).

BACT = Best Available Control Technology
NA = Not Applicable
RBLC = RACT/BACT/LEAR Database
SD/BH = Spray Dryer/Baghouse
SO_2 = Sulfur Dioxide

SO_2 is released along with the volatile fraction of the coal as the coking cycle proceeds. Approximately half of the sulfur in the coal remains in the coke product. The emissions are normally ducted to a primary system that collects cooled flue gas from the discharge side of the HRSGs. During HRSG inspection and maintenance, the same emissions are released from individual waste heat stacks. During primary system maintenance, the emissions are released from the main stack, but the waste gases are not routed through the air pollution control device. Pre-combustion controls are technologies that prevent the formation of pollutants during the combustion process (e.g., low-sulfur coal). The post-combustion controls that were identified are add-on controls that are used to either collect the pollutants or convert the pollutants to another form (e.g., lime added to SO_2 gas to form solid $CaSO_3$ and $CaSO_4$). Note that the post-combustion controls also remove PM.

5.4.1.1 Coking – Main Stack

A spray dryer (used in conjunction with a baghouse to control PM) is typically used as the primary SO_2/SO_3 air pollution control device for heat recovery coking. Because the ovens are maintained under negative pressure, the capture efficiency is virtually 100%.

Four options were identified that could potentially be used to control SO_2 from the thermal distillation of coal during the coking process. These are listed in Table 5-9 with a range of potential control efficiencies (AP-42 Section 1.1, Bituminous and Subbituminous Coal Combustion).

Table 5-9

Potential Technologies for SO_2 Control on Waste Gas from Coking Process

Control Technology	Control Efficiency Range for Boilers
Lime Injection and Spray Dryer/Absorber	70–90%
Wet Scrubber	80–95%
Limestone Injection	25–50%
Low-Sulfur Coal[a]	40–50%

[a]Low-sulfur coal is inherent to the process.

SO_2 = Sulfur Dioxide

5.4.1.1.1 Lime Injection and Spray Dryer/Absorber

In SD/BH systems, a calcium hydroxide slurry (lime mixed with water) is introduced into a spray dryer tower (see Figure 5-1). The slurry is atomized and injected into the gases, where droplets react with SO_2 as the liquid evaporates. This produces a dry product that is collected in the bottom of the spray dryer and in the particulate removal equipment. Figure 5-1 shows how lime and water (calcium hydroxide slurry) are introduced into the spray dryer tower (top center), where they mix with the gas, dry, and react with SO_2 to form $CaSO_3$ and $CaSO_4$. A fabric filter or ESP downstream of the spray dryer removes the ash, $CaSO_3$, $CaSO_4$, and unreacted lime. The collected solids are either recycled back through the process or used for other off-site applications.

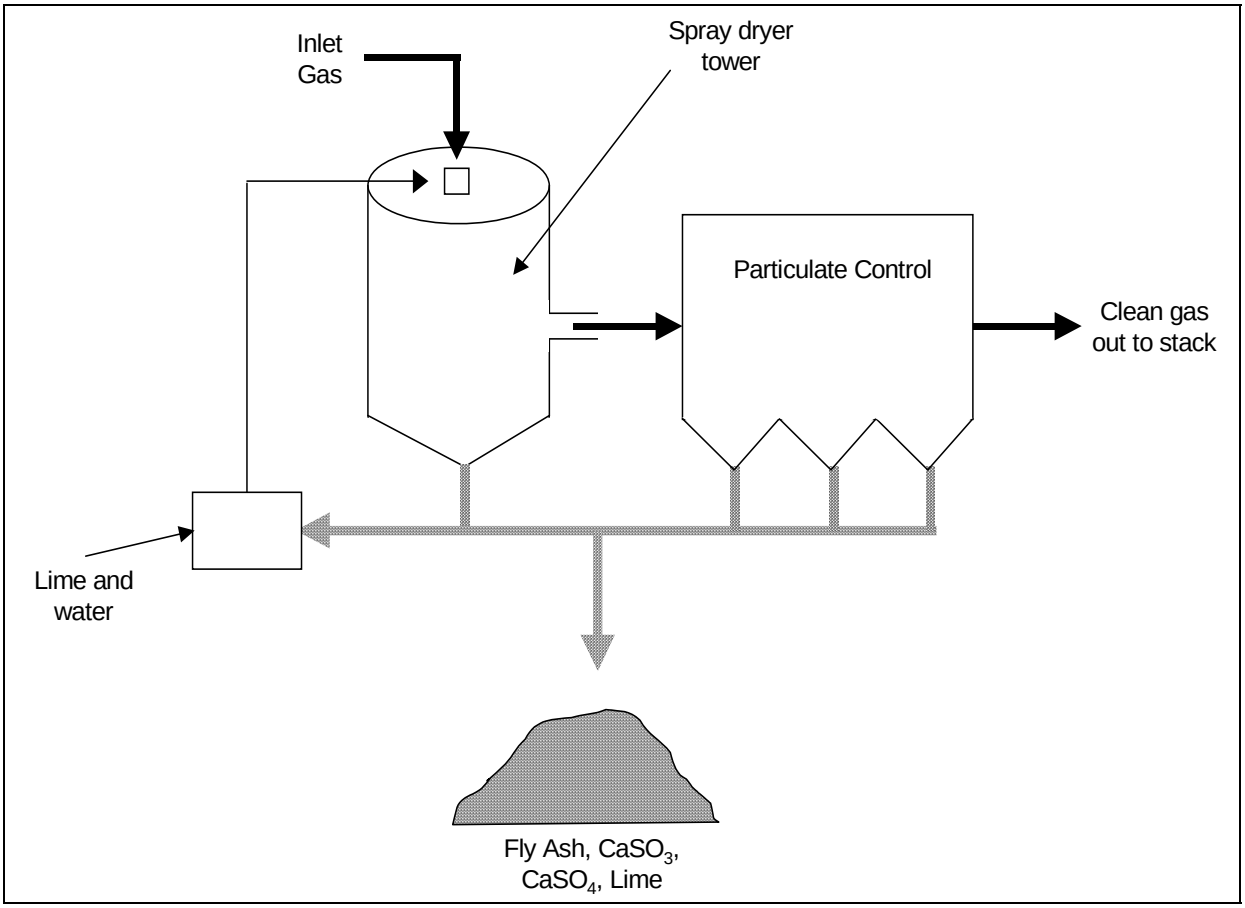

Figure 5-1. Spray Dryer Gas Desulfurization Process

This system is categorized as a "dry" system because the end product of the SO_2 conversion reaction is a dry material. Although termed as a dry system, this air pollution control system uses water for evaporative cooling and for the SO_2 reaction. Unlike a wet scrubbing system, however, there is no liquid blow-down stream from the dry system. The "dry" system has been used in low-sulfur coal applications to effectively remove SO_2 from a gas stream with removal efficiencies from 70% to 90%.

There is a potentially significant advantage for this technology when considering mercury control. When used with activated carbon injection, the residence time in the spray dryer, followed by the efficient particulate collection of a baghouse, has the potential to effectively remove particulate mercury as well as ionic and vapor-phase mercury. During coking, some of the mercury in the coal is volatilized and converted to mercury vapor. This vapor may subsequently form mercury compounds or may be adsorbed onto the surface of other particles. The mechanisms are complex, but mercury is ultimately present as a mixture of mercury vapor, ionic mercury compounds, and particulate mercury. Most of the mercury from the heat recovery coking process is in the vapor phase. Various studies have shown that carbon injection has the capability to remove vapor-phase mercury with an SD/BH. The sorbent is injected upstream of the spray dryer. The gas-phase mercury contacts the sorbent in the ductwork and spray dryer and attaches to its surface. The sorbent with the mercury is then collected in the baghouse. Because of this research, as of April 2008 nearly 90 full-scale activated carbon injection systems were ordered by U.S. coal-fired power generators (DOE 2008). This is potentially a significant advantage for the SD/BH system. This type of system can also typically remove at least 95% of HCl and SO_3/H_2SO_4.

This control technology (lime injection and spray dryer/absorber with baghouse) is technically feasible for the heat recovery waste gas stream. Lime injection with a baghouse is ranked as the most effective control technology for this particular application because the high level of SO_2 removal has been demonstrated in practice for similar applications. In addition, there are collateral benefits of mercury, HCl, and SO_3/H_2SO_4 removal as well as lower direct $PM_{2.5}$ emissions. Consideration of all these advantages makes this system significantly more effective than other control system designs.

5.4.1.1.2 Wet Scrubber

Figure 5-2 is a simplified process flow diagram of a conventional wet scrubber. In wet scrubbers, the waste gas enters a large vessel (spray tower or absorber), where it is sprayed with water slurry (approximately 10% lime or limestone). The calcium in the slurry reacts with the SO_2 to form $CaSO_3$. In most utility systems, the liquor in the bottom of the spray tower is sparged with air to oxidize the $CaSO_3$ to $CaSO_4$ to enhance settling. A portion of the slurry from the reaction tank is pumped into the thickener, where the solids settle before going to a filter for final dewatering to about 50% solids. The $CaSO_4$ is usually mixed with fly ash and fixative lime and typically disposed of in landfills.

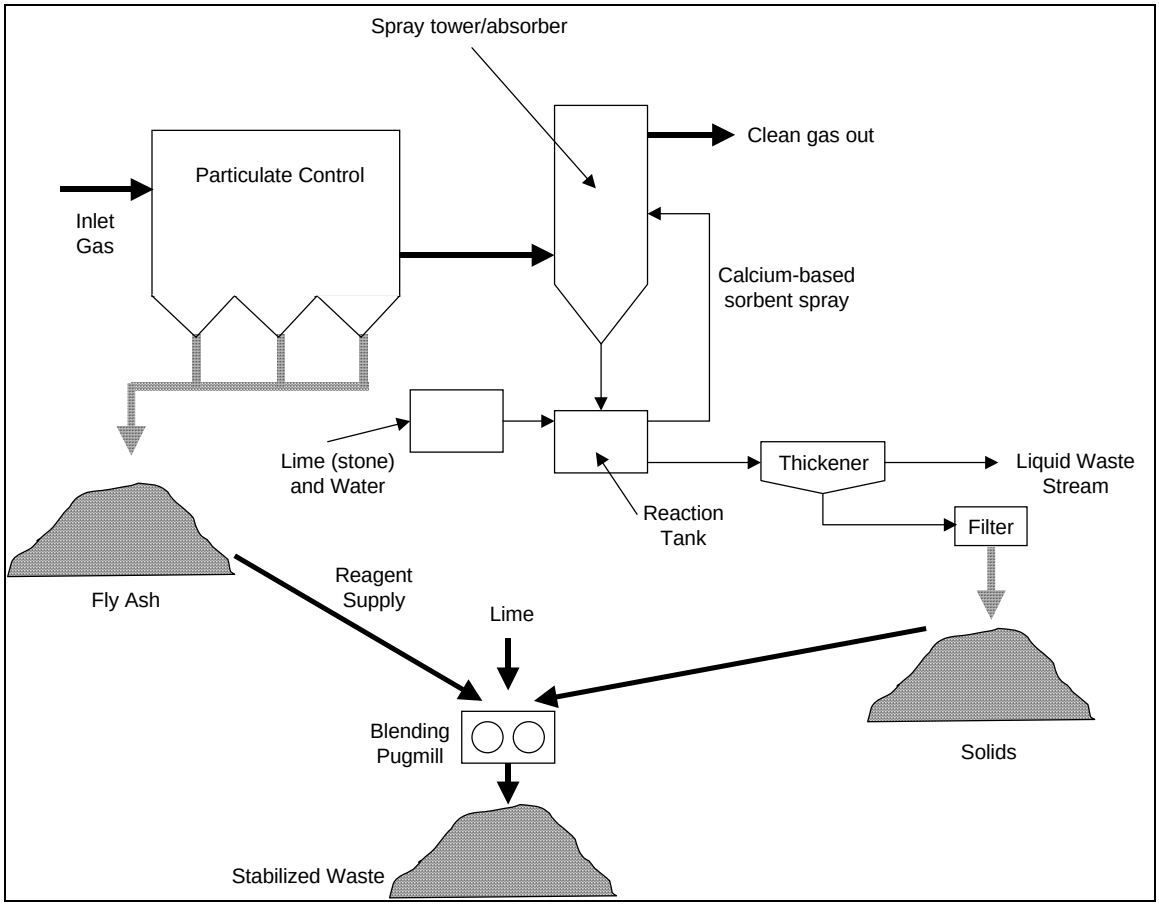

Figure 5-2. Wet Scrubber

Note that "mist eliminators" installed at the spray tower outlet or downstream ductwork collect slurry droplets and remove moisture from the gas. In some installations, the gas is reheated to avoid corrosion downstream in the power plant. Many scrubbers have gas bypassing

capability, which can be used for gas reheating. The mist that exits the scrubber contains suspended and dissolved solids that produce particles as the droplets evaporate.

Wet scrubbers may be designed for efficiency of 80–95% SO_2 removal in boiler applications. Some disadvantages for using wet scrubbing techniques in many applications are the requirement to treat wastewater, materials must be constructed from expensive alloys to resist corrosion, and energy use is much higher.

A practical issue associated with a wet scrubber system is the complexity of the system. Additional expertise is often needed in specifying, operating, and maintaining such a system, which is more like a chemical plant than a control device. The space required for a wet system is substantial (i.e., large footprint), the systems require more maintenance due to their complexity, and more personnel are required for their operation.

Wet scrubbers do not generally remove vapor-phase mercury very efficiently (the greatest part of emissions from the heat recovery process) but theoretically should remove the ionic portion of mercury. However, the ionic mercury has been found to be chemically-reduced within a scrubber and re-emitted as mercury vapor (DOE 2008). Wet SD/BH additives are being studied to improve mercury capture by wet scrubbers but these are not considered available.

SO_3 condenses to H_2SO_4 aerosols in a wet SD/BH system. Wet scrubbers have less affinity for acid mist and typically capture between 25% and 50% of sulfuric acid aerosols (Sargent & Lundy 2007).

A wet scrubbing system is considered theoretically feasible for MCC, but has never been used in practice because of the inherent environmental and operational advantages of the dry scrubber system. The actual control efficiency of such a system has also not been evaluated since such a system has not been installed for similar applications and as such may not provide any additional SO_2 control than the lime injection and spray dryer/absorber option.

5.4.1.1.3 Limestone Injection

In boilers, SO_2 may be removed by injecting a sorbent (lime, limestone, or dolomite) into the combustion gases, typically above the burners or in the backpass before the air heater. Furnace sorbent injection involves injection of the sorbent into the boiler above the combustion zone (preferably where the gas temperature is approximately 1,200°C, or 2,200°F) through special injection ports. The sorbent decomposes into lime, which reacts in suspension with SO_2 to form $CaSO_4$. The $CaSO_4$, unreacted sorbent, and fly ash are removed at the particulate control device (either an ESP or baghouse) downstream from the boiler. In boilers, SO_2 removal is 30–60% (with a calcium-to-sulfur molar ratio of 2:1) when injected into the combustion zone, but this still must be demonstrated on a large scale.

The heat recovery coke ovens are not designed for suspension burning. Sorbent injected into the oven would settle onto the coal bed and produce contaminated coke. Similarly, the sole flues and afterburner tunnel are designed for gas combustion, and the sorbent would likely settle out. For these reasons, limestone injection is not technically feasible for the MCC coking process.

5.4.1.1.4 Low-Sulfur Coal

Emissions of SO_2 from fuel burning sources vary considerably with the nature or origin of the fossil fuel. The overall reaction for the formation of SO_2 from sulfur is simply

$$S + O_2 \rightarrow SO_2$$

A method to reduce SO_2 emissions from fossil fuel combustion is to change to low-sulfur fuels. Stochiometrically, 2 lb of SO_2 as generated by a typical combustion process (i.e., utility boiler) is equivalent to 1 lb of sulfur. Thus, reducing the sulfur content of the fuel proportionally decreases the generation of SO_2 during this combustion process. For example, replacing a coal containing 2% sulfur with a coal containing 1% of sulfur (i.e., low-sulfur coal) results in a decrease of SO_2 emissions of 50% from a boiler.

The conversion of coal to coke, however, may not directly parallel a boiler when it comes to low-sulfur fuels. Unlike coal-fired boilers, the coal is heated, not burned, during the coking process, and primarily it is the volatilized material from the coal that is combusted. Although approximately half of the sulfur in the coal remains in the coke, the sulfur component of the volatilized material will follow the equation above and produce SO_2.

All the heat recovery coking facilities operated by SunCoke utilize low-sulfur coal (less than 1.5%) as a requirement for the production of coke. SunCoke is the only U.S. company that operates this heat recovery process, so there are no data available on emissions using high-sulfur coal. For this reason, emission estimates incorporate low-sulfur coal, and other technologies are evaluated based on the use of low-sulfur coal in conjunction with the examined technology.

Using low-sulfur coal is technically feasible and is an integral part of the heat recovery coking process.

As previously discussed, at times the flue gases will not pass through the main air pollution control system. First is during inspection and maintenance of the HRSGs. Second is for inspection and maintenance of the main air pollution control system. These are addressed in the following sections.

5.4.1.2 Coking – HRSG Maintenance

As discussed previously, the individual waste heat stacks will be used during annual inspection and maintenance of each HRSG so that these procedures can be performed safely. The maximum time that will be required for maintenance and inspection of each HRSG is 10 days/year. During the scheduled maintenance, 20 ovens will vent waste gases directly into the atmosphere, bypassing the primary control system. The remaining 80 ovens will continue to pass through the primary control system.

The options presented for controlling PM/PM_{10} from the individual waste heat stacks during the 10 days of maintenance on each HRSG also apply to control SO_2. While this design option has not been required for any other heat recovery facility, and has never been designed or

applied in practice, controlling SO_2 during HRSG maintenance with additional HRSGs and an expanded waste heat tunnel is a theoretically feasible option (see Section 5.2.1.2.3).

5.4.1.3 Coking – SD/BH Maintenance

The SD/BH system will be bypassed as part of routine, preventive maintenance program to promote optimum performance and maximum effective service life of all components. Two options were identified to reduce or eliminate SO_2 emissions during SD/BH maintenance.

First, SO_2 emissions can be minimized by the work practices of reducing production and limiting coal sulfur. Based on operating experience, a minimum 48-hour charge of approximately 42 tons per oven (depending on ambient conditions) is necessary to provide adequate heat to protect the oven from thermal spalling and irrevocable structural damage. This would require several days to gradually reduce tonnage from typical operation to this level. This could be achieved during SD/BH maintenance due to the advanced planning required for its outage, which in turn will allow for the necessary charge ramp down time. HRSG maintenance is required and generally scheduled in advance. However, HRSG maintenance may be taken opportunistically with little advance notice, which would not allow sufficient time to ramp down the associated ovens. Consequently, reducing oven charge size is not a feasible alternative for decreasing SO_2 emissions during HRSG maintenance.

MCC believes it is possible to obtain acceptable metallurgical coal with a sulfur content of 1.1% for a short-term event such as SD/BH maintenance. However, because MCC will not be able to segregate coal blends for individual or groups of ovens (there will only be one coal pile for storage and reclaim of a single coal blend at the MCC facility), reducing coal sulfur is not a feasible alternative for HRSG maintenance, which would require isolation of coal for individual ovens.

The combined effect of using lower sulfur coal and reducing coal charge will be to reduce emissions during SD/BH maintenance by approximately 28% compared to uncontrolled levels. For example, this can be accomplished using coal with a sulfur content of 1.1% and a coal charge tonnage of 42.5 tons/oven.

Second, since the ovens cannot be shut down, the only option for completely controlling emissions during SD/BH maintenance would be to install a redundant SD/BH system. At a minimum, a redundant system would require a second SD/BH with instrumentation and additional steel ductwork with dampers.

5.4.1.4 Selection of BACT for SO_2 – Coking Process

This section presents those technologies that were identified as technically and/or theoretically feasible for controlling SO_2 emissions from coking.

5.4.1.4.1 Evaluation of Technically Feasible Controls – SO_2 Primary System

Low sulfur coal is technically feasible and inherent to the process. Two systems were identified as technically feasible as the primary control system to be installed downstream of the HRSGs – lime injection with an SD/BH and wet scrubbing.

One advantage of the heat recovery coking process is that it produces no process wastewater. A significant advantage of dry scrubbing is that it provides high SO_2 removal without generating wastewater. Another advantage is that an SD/BH system is a very effective particulate removal device, which also means minimal emissions of fine particulate ($PM_{2.5}$) and hazardous metals. A third advantage of the dry scrubbing option is its potential for mercury control. A fourth advantage is that spray dryer systems, when compared with wet scrubbers, typically demonstrate higher removal of acid gases like H_2SO_4 and HCl. The advantage of the wet scrubbing system is that it has potentially higher SO_2 removal.

An SD/BH system is the best overall option for the application at MCC. SO_2 is included in the LAER analysis in Section 8.0 as a precursor of $PM_{2.5}$; but more importantly, an SD/BH /baghouse has lower direct $PM_{2.5}$ emissions than a wet scrubber. $PM_{2.5}$ emissions will be controlled to a level of 0.005 gr/dry standard cubic foot (dscf) at MCC. In addition, the higher removal of H_2SO_4 (expected to be at least 95%) removes a more direct $PM_{2.5}$ precursor. Even though a wet scrubbing system is theoretically feasible for use with the heat recovery coking

technology, it is unknown whether this has been demonstrated. With these considerations, a dry scrubber, with an SO_2 design removal efficiency of 92%, was selected as the primary system for control of sulfur oxides and $PM/PM_{10}/PM_{2.5}$.

5.4.1.4.2 Evaluation of Theoretically Feasible Controls – SO_2, HRSG, and SD/BH Maintenance

This section presents the evaluation of SO_2 controls during the 10 potential days of annual maintenance on each HRSG and from the main stack during the 5 days of maintenance on the SD/BH system. The options include work practices to reduce emissions during SD/BH maintenance or additional equipment to allow the waste gases to be treated during these periods. The equipment options are the same as those previously presented for PM/PM_{10}.

In the case of SO_2 controls for HRSG and SD/BH maintenance, the control options during maintenance periods present similar removal efficiencies. Table 5-10 presents those technologies that were identified as theoretically feasible for controlling emissions during maintenance and the expected emission levels associated with these controls.

Table 5-10

Theoretically Feasible Controls for SO_2 Reductions During Maintenance

Control Technology	Control Level for BACT Analysis	Expected Emission Level (tons/year)
Option for HRSG maintenance		
Addition of HRSGs and expanded waste heat tunnel	92% Removal	23.9
Uncontrolled baseline	No controls	299
Options for SD/BH Maintenance		
Redundant SD/BH system	92% Removal over baseline	12.0
Emission minimization (work practice)	28% Reduction	107.6
Uncontrolled baseline	No controls	149.5

BACT = Best Available Control Technology
HRSG = Heat Recovery Steam Generator
SD/BH = Spray Dryer/Baghouse
SO_2 = Sulfur Dioxide

5.4.1.4.3 Economic Impacts

The costs for this analysis included total capital and annualized dollars per year. The emission rates were calculated in tons per year, and a cost-effectiveness number in dollars per ton of pollutant removed was calculated.

The baseline emissions for HRSG maintenance were established at 299 tons/year SO_2, which is equivalent to the emissions from all five waste heat stacks over five 10-day periods of operation. The baseline emissions for SD/BH maintenance were established at 149.5 tons/year SO_2, which is equivalent to the maximum potential uncontrolled emissions for 5 days. These are the total potential SO_2 emissions that could occur during maintenance and inspection of the HRSGs and the SD/BH system.

Table 5-11 summarizes the economic impacts. Appendix D provides details on the calculation of values presented. No cost was assumed for the work practice option of limiting emissions during SD/BH maintenance by reducing production and/or coal sulfur equivalent to 28% compared to potential emissions. All the equipment options would be very expensive. The option for controlling emissions during HRSG maintenance by installing additional HRSGs and an expanded waste heat tunnel has a capital cost of $36,026,000 with a cost-effectiveness of $22,100/ton of SO_2 removed.

The equipment option for controlling emissions during SD/BH maintenance was a redundant SD/BH system. This option would be even more expensive. The capital cost of this additional control was $44,152,000 and the cost-effectiveness was $44,700/ton of SO_2 removed.

No cost was assumed for the option of limiting SO_2 emissions by 28% compared to baseline during SD/BH maintenance by limiting coal sulfur and production.

5.4.1.4.4 Environmental Impacts

The application of the proposed controls will be protective of the NAAQS, PSD increment, and Ohio one-half PSD increment as demonstrated in Section 6.0 of this application.

Table 5-11

Summary of Top-Down BACT Impact Analysis Results for SO_2 for Maintenance Emissions

Control Alternative	Emissions		Economic Impacts			Environmental Impacts		Energy Impacts
	Emission Rate (tons/year)	Emission Reduction (tons/year)	Installed Capital Cost	Total Annualized Cost	Cost-Effectiveness ($/ton)	Toxics Impact (yes/no)	Adverse Environmental Impacts (yes/no)	Incremental Increase Over Baseline (MW-hour/year)
Option for HRSG maintenance								
Addition of HRSGs and expanded waste heat tunnel	23.9	275.1	$36,026,000	$6,092,000	$22,100	No	No	None
Uncontrolled baseline	299	—	—	—	—	—	—	—
Options for SD/BH maintenance								
Redundant SD/BH system	12.0	137.5	$44,152,000	$6,149,000	$44,700	No	No	471
Emission minimization (work practice)	107.6	41.9	Negligible	Negligible	Negligible	No	No	Negligible
Uncontrolled baseline	149.5	—	—	—	—	—	—	—

BACT = Best Available Control Technology
HRSG = Heat Recovery Steam Generator
SD/BH = Spray Dryer/Baghouse
SO_2 = Sulfur Dioxide

Additional control options for controlling emissions during periods of maintenance on the HRSGs and the SD/BH unit would not provide a significant level of additional protection of the NAAQS or increment. None of the identified control options present any other significant environmental impact.

5.4.1.4.5 Energy Impacts

The energy impacts of the option for the addition of HRSGs and for the work practice option during SD/BH maintenance have no increased energy usage. Application of the redundant SD/BH system would require an increase in plant energy usage. This is either in the form of electricity associated with pumping, atomization air production, or increased fan power associated with increased flow.

5.4.1.5 SO_2 BACT Summary – Coking

An SD/BH was selected as BACT for the primary system for control of SO_2. The level of control is as stringent as recent BACT determinations listed in the RBLC database.

With capital costs of $36,026,000–$44,152,000 and cost-effectiveness of $22,100–$44,700/ton of additional SO_2 removed, all options for controlling emissions during HRSG or SD/BH maintenance are cost prohibitive. Therefore, all add-on equipment options to control emissions during HRSG and SD/BH maintenance were rejected. BACTs for controlling SO_2 emissions during maintenance are:

- Minimizing emissions from waste heat stacks during HRSG inspection and maintenance by bringing only one HRSG offline at a time so that 80% of the waste gases will go through the primary system;
- Limiting HRSG maintenance to no more than 2.7% of the operating hours (10 days/year/HRSG);
- Limiting SD/BH inspection and maintenance to no more than 1.4% of the operating hours (5 days/year) by using appropriate personnel and scheduling the work to be performed in the shortest possible time;
- Minimizing emissions during SD/BH maintenance by 28% compared to baseline by limiting coal sulfur and production; and

- Overall, treating 96% of the waste gases generated by the ovens in the SD/BH system.

5.4.2 Charging and Pushing

SO_2 is present in the emissions from pushing and charging but the concentrations are dilute (less than 1 to 30 ppm), intermittent, and emitted from mobile machinery. No SO_2 controls are technically feasible for pushing and charging.

5.4.3 Selection of BACT for SO_2

The proposed BACT requirements for SO_2 are summarized in Table 5-12. The proposed BACT level of control is consistent with the level of control determined as LAER for SO_2 in Section 8.0. These controls will be protective of the NAAQS, PSD increment, and Ohio one-half PSD increment for SO_2 as demonstrated in Section 6.0 of this application. Additional options for controlling emissions during periods of maintenance on the HRSGs and the SD/BH unit have never been required for any other heat recovery batteries, have not been demonstrated in practice, and are either technically or economically infeasible.

Table 5-12

Summary of Recommended BACT for SO_2 Control

Control Technology	Proposed SO_2 Limit
Coking - Main Stack: Spray Dryer/Fabric Filter on Waste Gas Stream	Design for 92% removal efficiency; Design for 1.54 lb/wet ton coal (annual average)
Coking – HRSG Maintenance	23.92 lb/ton coal; 10 days/year/HRSG
Coking – SD/BH Maintenance	Limit emissions to 1,794 lb SO_2/hour (28% reduction over potential); 5 days/year

BACT = Best Available Control Technology
HRSG = Heat Recovery Steam Generator
SD/BH = Spray Dryer/Baghouse
SO_2 = Sulfur Dioxide

5.5 <u>H_2SO_4 for Coking and Related Activities</u>

SO_3 is formed as a small fraction (approximately 5%) of the sulfur oxides produced when sulfur in the coal is oxidized. As a conservative assumption, SO_3 was assumed to be emitted as H_2SO_4. The RBLC database did not contain any previous determinations for H_2SO_4 from

nonrecovery coke plants. The control technology and practices that satisfy BACT for SO_2, a lime spray dryer followed by a baghouse, will remove greater than 95% of the H_2SO_4 and are selected as BACT and BAT. This is one of the advantages of the SD/BH system. By comparison, H_2SO_4 is formed in wet scrubbers that typically capture between 25% and 50% of sulfuric acid aerosols (Sargent & Lundy 2007). The economic, energy, and environmental impacts that result from the application of this control technology are acceptable. The proposed emission limits are listed in Table 5-13.

Table 5-13

Summary of Recommended BACT for SO_3/H_2SO_4 Control

Control Technology	Proposed SO_2 Limit
Coking - Main Stack: Spray Dryer/Fabric Filter on Waste Gas Stream (Coking Process)	Design for 95% removal efficiency
Coking – HRSG Maintenance	25.4 lb H_2SO_4/hour 10 days/year/HRSG
Coking – SD/BH Maintenance	Limit emissions to 91.5 lb H_2SO_4/hour (28% reduction over potential); 5 days/year

BACT = Best Available Control Technology
H_2SO_4 = Sulfuric Acid Mist
HRSG = Heat Recovery Steam Generator
SD/BH = Spray Dryer/Baghouse
SO_2 = Sulfur Dioxide
SO_3 = Sulfur Trioxide

5.6 NO_x from Coking and Related Activities

Consistent with the "top-down" methodology previously discussed, NO_x controls were evaluated in the BACT analysis for the coking process and related activities (i.e., pushing). Quenching and charging are negligible sources of NO_x as indicated by the absence of an AP-42 emission factor. NO_x is present in the emissions from pushing but the concentrations are dilute (less than 10 ppm), intermittent, and emitted from mobile machinery. No NO_x controls are technically feasible for pushing.

As previously stated, the types of air pollution control systems used for coal-fired utility boilers could generally be used for heat recovery coke ovens. However, there are differences in the nature of the process and flue gas characteristics that prevent direct comparison of performance. The heat recovery flue gas is unique. It does not contain the light coal fly ash of a

coal-fired boiler. The particulate loading in heat recovery coke oven flue gases is low due to the inherently excellent combustion. However, with little alkaline fly ash to adsorb HCl, chloride salts form in air pollution control devices. Coal fly ash is light and stays suspended, whereas calcium chloride is sticky and easily forms deposits. The air pollution control system for heat recovery coke ovens must be operated to minimize deposition of chloride salts. Also, coke ovens cannot be shut down without causing severe damage to the ovens. This is not the case with utility boilers, which can be routinely shut down if problems develop in the air pollution control system. Because of the uniqueness of this application, BACT determinations in the RBLC database were restricted to those for heat recovery coke ovens. Two BACT determinations were identified and are presented in Table 5-14.

As previously discussed, the FDS Coke Plant has not been constructed.

5.6.1 Coking

The primary source of NO_x is the coke oven waste heat gases. The following sections discuss combustion controls, post-combustion controls (i.e., add-on controls), and their applicability to the heat recovery coking process. Combustion controls discussed are staged combustion and low NO_X burners (LNBs). Post-combustion controls discussed are selective catalytic reduction (SCR) and selective non-catalytic reduction (SNCR).

5.6.1.1 Staged Combustion

Staged combustion controls NO_X by limiting the oxygen present at temperatures where NO_X formation is likely and/or suppressing peak temperatures that increase NO_X formation during gas combustion. The proposed heat recovery coke ovens use three discrete regions for staged combustion of the coal volatiles. The regions are the crown, the sole flues, and the waste heat tunnel. The crown is the first stage of air addition. This operates in a reducing atmosphere where minimal oxygen is present for NO_X formation.

Table 5-14

RBLC Database Search Results for BACT NO_x Control at Nonrecovery Coke Facilities

RBLC ID	Facility Name	Last Updated	Process Name	Control Description	Pollutant	Emission Level	Efficiency
OH-0297	FDS Coke (heat recovery coke plant)	6/6/2008	Coke oven batteries, (2) with 168 ovens, battery stack	Staged Combustion	NO_x	1 lb/ton	NA
			Coke oven batteries, (2), HRSG bypass (6)	NA	NO_x	No standard limit	NA
			Coke Oven batteries, (2) with 168 ovens, pushing	NA	NO_x	No standard limit	NA
OH-0305	Haverhill North Coke Company (heat recovery coke plant)	6/23/2008	Batteries A&B, pushing	Staged Combustion	NO_x	0.016 lb/ton[a]	NA
			Batteries A&B, coke oven batteries	Staged Combustion	NO_x	1 lb/ton	NA
			Batteries A&B, HRSG bypass vent	Bypass of controls	NO_x	No standard limit	NA
			Batteries C&D, pushing	Staged Combustion	NO_x	0.016 lb/ton[a]	NA
			Batteries C&D, coke oven batteries	Staged Combustion	NO_x	1 lb/ton	NA
			Batteries C&D, HRSG bypass vent	Bypass of controls	NO_x	No standard limit	NA
None (not in RBLC database yet)	Gateway Energy and Coke Company	Permit issued 3/13/2008	Coking	Staged combustion	NO_x	No standard limit - based on 1 lb/ton coal	NA
			Coking - waste heat stacks	Staged combustion	NO_x	No standard limit - based on 1 lb/ton coal	NA
			Pushing	Work practices	NO_x	No standard limit - based on 0.019/ton coal	NA
None	MCC (proposed in this application)	NA	Coking - main stack	Staged combustion	NO_x	1 lb/ton coal	NA
			Coking - HRSG and SD/BH maintenance	Staged combustion	NO_x	1 lb/ton coal	NA
			Coke pushing	Work practices	NO_x	0.019 lb/ton coal	NA

[a] Current AP-42 emission factor (for pushing) is 0.019 lb NO_x/ton (May 2008).

BACT = Best Available Control Technology
MCC = Middletown Coke Company
NA = Not Applicable
NO_X = Nitrogen Oxides
RBLC = RACT/BACT/LEAR Database
SD/BH = Spray Dryer/Baghouse

The sole flues receive secondary air and operate in a reducing or oxidizing atmosphere as dictated by the oven gas rates. NO_X formation is minimized in the sole flues by controlling the temperatures. The final stage is the common tunnel afterburner, which is always operated in an oxidizing mode. NO_X formation is limited in this region by adding enough tertiary air to cool the gases below temperatures where NO_X is formed (less than 2,400°F).

Staged combustion is an inherent part of the heat recovery process that results in NO_X emissions of 1 lb/ton coal (or approximately 58 ppm at 8% oxygen).

5.6.1.1 Low NO_X Burners

LNBs limit NO_X formation by controlling the stoichiometric and temperature profiles of the combustion process in each burner zone. The burner design of an LNB may create (1) a reduced oxygen level in the combustion zone to limit fuel NO_X formation, (2) a reduced flame temperature that limits thermal NO_X formation, and/or (3) a reduced residence time at peak temperature, which also limits thermal NO_X formation. Typical control efficiencies for boilers employing LNB range from 40% to 60% (AP-42 Section 1.1, Bituminous and Subbituminous Coal Combustion).

A boiler is different from a heat recovery coke oven. External fuel is burned in a boiler that can be controlled as previously described. In a heat recovery coke oven, the volatile fraction of the coal migrates from the coal bed, and the gases are burned inside the oven system. The coal bed is converted to a coke bed over the cycle and remains in the oven. LNBs are not technically feasible for heat recovery coke ovens because the coal is not burned and there is no external fuel.

5.6.1.2 Selective Non-Catalytic Reduction

SNCR is a post-combustion technique that involves injecting ammonia or urea into specific temperature zones in the upper furnace or connective pass of a boiler. See Figure 5-3 for an example. The ammonia or urea reacts with NO_X in the gas to produce nitrogen and water. The chemical reaction for nitric oxide and ammonia is as follows:

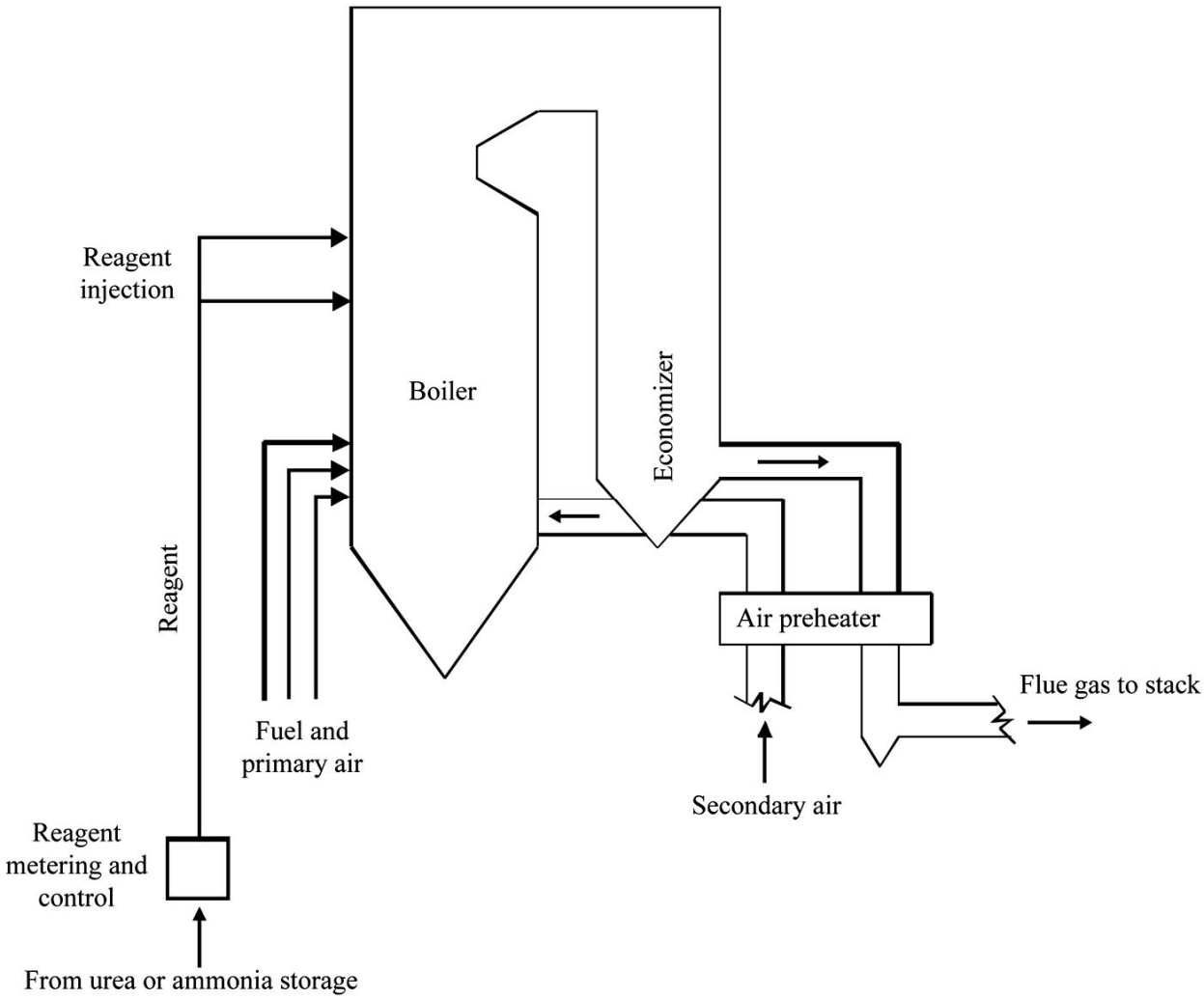

Figure 5-3. Schematic of an SNCR Application at a Boiler

$$2NO + 2NH_3 + 1/2\ O_2 \rightarrow 2N_2 + 3H_2O$$

Multiple injection locations are required within several different zones of the boiler to respond to variations in the boiler operating conditions. SNCR technologies can reduce NO_X emissions by 30–60% in coal-fired boilers (AP-42 Section 1.1, Bituminous and Subbituminous Coal Combustion).

The effectiveness of SNCR depends on the temperature where reagents are injected, mixing of the reagent in the gas, residence time of the reagent within the required temperature window, ratio of reagent to NO_X, and the presence of sulfur compounds in the flue gases (ammonia reacts with SO_2 and SO_3 to form ammonium sulfates and bisulfates that can cause plugging of downstream equipment).

There are two difficulties with using SNCR with the heat recovery process. First is the formation of ammonium sulfates and bisulfates that are known to cause plugging of downstream equipment. Although these systems have been demonstrated on coal-fired utility boilers, it cannot be automatically assumed that they will work on heat recovery coke ovens because of differences in the nature of the process and flue gas characteristics of heat recovery coke ovens. The heat recovery coke oven flue gas does not contain the light coal fly ash of a coal-fired boiler.

The particulate material in the heat recovery coke oven gases is acidic and contains condensable metal salts with a demonstrated tendency to cause fouling. Despite installation of special soot blowers to deal with this, experience at Haverhill North Coke Company has shown that the HRSGs should be shut down for maintenance and cleaning twice a year. The use of SNCR would add ammonium sulfates and bisulfates that also have a high fouling potential. This combination is likely to cause more fouling, which would lead to the need for more cleaning and maintenance. The likely result would be more HRSG downtime for maintenance, which would increase emissions because of additional time that the SD/BH system would be bypassed since the coke ovens cannot be shut down.

The second obstacle is the need for a specific temperature range and residence time. Figure 5-3 shows how a boiler could be configured with multiple injection locations so that ammonia or urea can be added at an appropriate temperature. Note also that, because of the large space in a boiler, there will be adequate residence time at the ideal temperature. The required temperature window is 1,600–2,200°F (the most effective range is 1,800–2,100°F). Above these temperatures more NO_x will be formed from nitrogen in the reagent – below these temperatures no reaction will occur. The oven crown and sole temperatures would not be appropriate locations to add ammonia or urea because the temperatures are generally higher. The temperature in the common tunnel and hot duct to the HRSG varies from 1,800°F to 2,400°F. So at times, the

temperature would be in the correct range and at times above the range. Figure 5-4 shows the arrangement of the common tunnel and hot duct to the HRSG. In contrast to an SNCR system at a boiler, an SNCR system for heat recovery coke ovens would have to be instrumented with a system that could monitor the temperatures throughout the 2,000 ft of common tunnel and hot ducts for the HRSGs and have many injection locations so that reagent could be injected where needed. This contrasts with an SNCR application at a boiler where the injection locations would be close together. To the best of our knowledge, the type of SNCR system required for an application like heat recovery coke ovens has never been demonstrated.

SCNR is not technically feasible and has never been used with the heat recovery coking process because of the potential for increased HRSG fouling (which would increase emissions), the difficulty of determining an appropriate injection location, and the complexity that would be required to safely deliver the reagent throughout the 2,000 ft of common tunnel and hot duct.

5.6.1.3 Selective Catalytic Reduction

SCR is a post-combustion technique similar to SNCR that involves injecting ammonia into flue gas in the presence of a metal-based catalyst to convert NO_X emissions to elemental nitrogen and water. The catalyst allows SCR systems to operate at much lower temperatures than SNCR; typical temperatures for SCR are 500–800°F, compared with 1,600–2,200°F for SNCR. The optimum temperature range is 700–750°F (EPA 2002). Potential NO_X removal in pulverized coal boilers and cyclone furnaces is 75–85% in applications with low sulfur and low fly ash (AP-42 Section 1.1, Bituminous and Subbituminous Coal Combustion).

When used with coal-fired boilers, SCRs have mainly been applied to electric utilities and large industrial boilers ranging in size from 1,300 to 8,000 MMBtu/hour (RBLC database, March 2009). Since boiler outlet temperatures are usually much cooler than 700°F, SCRs are often installed between the economizer and air heater. This ensures that the gases entering the SCR reactor are in the appropriate temperature range. An economizer bypass can be used to divert part of the hot flue gas around the economizer to bring the temperature into the optimum range. The temperature of the gas stream is cooled in the air heater, downstream of the SCR reactor, to the desired outlet temperature. Figure 5-5 is a schematic of an SCR system in a boiler

This page intentionally left blank.

Figure 5-4. HRSG and Ductwork at HNCC

This page intentionally left blank.

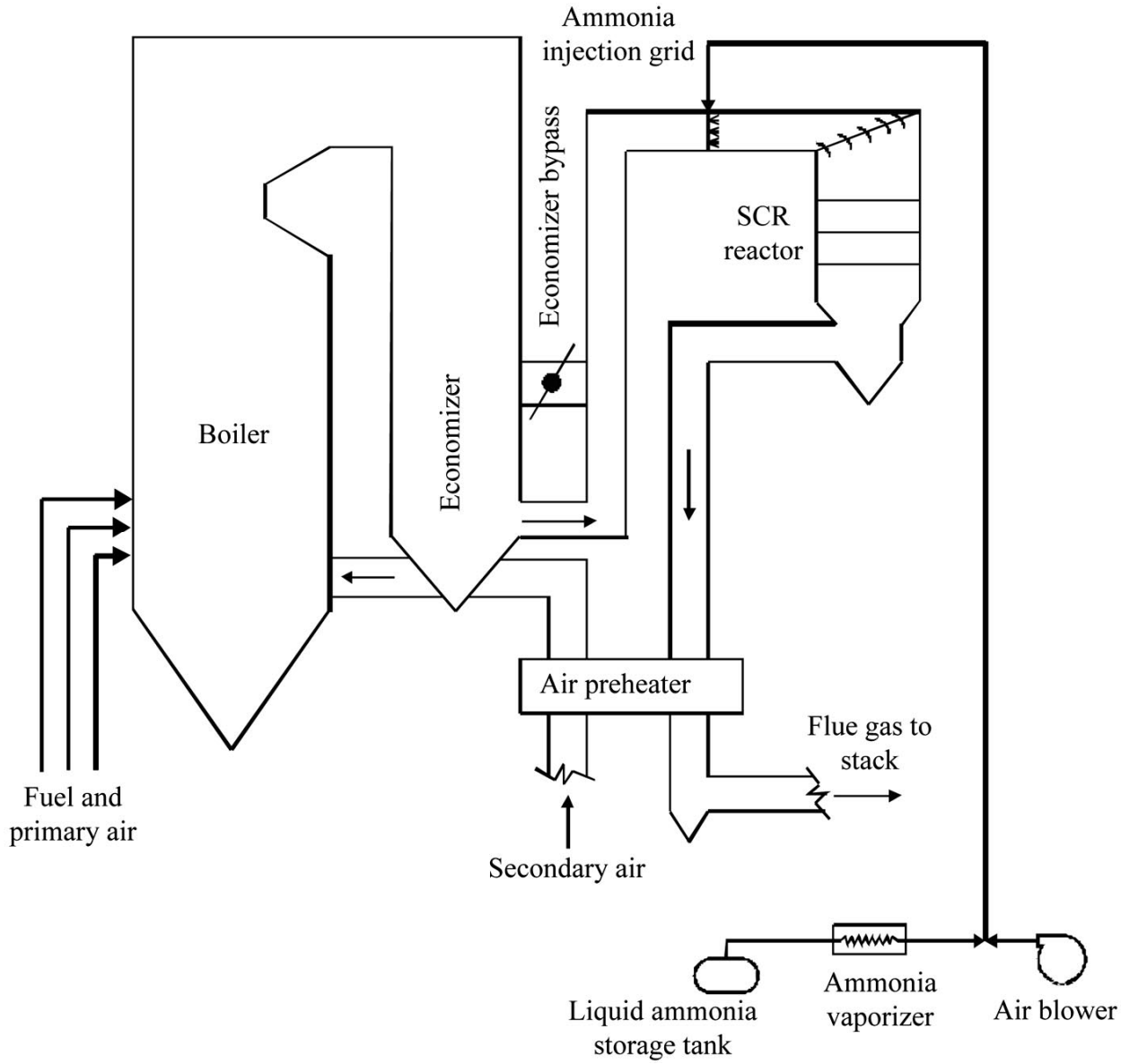

Figure 5-5. Schematic of an SCR Application

The types of waste heat recovery heat exchangers needed at MCC are fairly simple, consisting of three sections: superheater, evaporator, and economizer. The economizer in these types of HRSGs is designed to cool the flue gases to 350°F compared to the typical large boiler or heater with economizer outlet temperatures closer to the 650–750°F range. At 350°F, the gas temperature is outside the range where SCR would be effective. The HRSGs are relatively small units (100 MMBtu/hour) designed to produce steam from waste heat. Unlike utility boilers with

economizers and air heaters, they do not contain sections within the unit where the temperature is in the range where SCR can be used.

As previously discussed, an additional difference with the heat recovery coking process is the inherently fouling ash compared to the light fly ash of a coal-fired boiler. The heat recovery coke oven ash would be likely to blind or poison the SCR catalyst. Again, this would lead to the need for more cleaning and HRSG maintenance, which would increase emissions because of additional time that the SD/BH system would be bypassed since the coke ovens cannot be shut down.

SCR is not feasible and is not known to ever have been used with the heat recovery coking process because of lack of a zone with appropriate temperature to install SCR in this type of relatively small and simple HRSG and the potential for increased HRSG fouling.

5.6.2 Coking – HRSG and SD/BH Maintenance

The HRSGs are designed to cool the flue gas to 350°F. The cooled gases are sent to the SD/BH where SO_2 and PM are removed. No additional NO_x is formed downstream of the HRSG due to the cooled temperatures. The SD/BH system does not remove NO_x. Consequently, NO_x emissions from the ovens are the same during typical operation as during HRSG or SD/BH maintenance.

5.6.3 NO_x BACT Summary – Coking

Combustion controls to minimize NO_X are feasible for the heat recovery coking technology and can reduce the NO_X concentration to less than 100 ppm. Staged combustion has been demonstrated to produce NO_X emissions of 1 lb/ton coal, which is approximately 58 ppm at 8% oxygen. Also, since staged combustion is a combustion control technology, it applies to coke oven emissions from the main stacks or from the individual waste heat stacks during HRSG or SD/BH maintenance.

Post-combustion controls are not feasible with the heat recovery coking technology. SNCR is not feasible due the likely fouling and absence of a suitable location with the correct temperature window. SCR is not feasible due to the relatively simple and small HRSGs needed for this application and their outlet temperature.

The proposed BACT and BAT limit for NO_x from coking is 1 lb NO_x per wet ton coal charged.

5.7 Summary of Proposed BACT and BAT

BACT for the waste gases from coking is the use of combustion optimization, staged combustion, a baghouse on the main stack, and work practices with a limitation on hours during HRSG and SD/BH maintenance. BACT for oven charging is a traveling hood with a baghouse. BACT for pushing is flat car pushing with a multicyclone. BACT for quenching is a tower with improved baffles and use of water with controlled TDS. BACT for SO_3/H_2SO_4 is the use of a SD/BH to control SO_2. The controls and emission levels are summarized by pollutant in Table 5-15.

Table 5-15

Summary of BACT/BAT Selection

Pollutant	Emission Unit	BACT Determination	Emission Level
PM/PM_{10}	Coking – main stack	SD/BH	0.005 gr/dscf
	Coking – HRSG maintenance	Work practices	0.049 gr/dscf
		Limit HRSG maintenance to one HRSG at a time	
		Limit annual HRSG maintenance to <2.7% of operating hours (10 days/HRSG)	
	Coking – SD/BH maintenance	Work practices	
		Limit annual SD/BH maintenance to <1.4% of operating hours (5 days/year)	
	Pushing	Flat push with multicyclone	0.04 lb/ton coke
	Charging	Traveling hood with baghouse	0.0081 lb/dry ton coal
	Coke crushing/screening	Enclosure and baghouse	0.008 gr/dscf
	Quenching	Improved baffles and water with controlled TDS	PM: 0.12 lb/ton coal
			PM_{10}: 0.044 lb/ton coal
CO	Coking – main stack	Combustion optimization	20 ppm
	Coking – HRSG and SD/BH maintenance	Combustion optimization	20 ppm
	Pushing	Work practices	0.063 lb/ton coal
SO_2	Coking – main stack	SD/BH	Design for 92% removal efficiency
			Design for 1.54 lb/wet ton coal (annual average)
	Coking – HRSG maintenance	Work practices	23.92 lb/ton coal
		Limit HRSG maintenance to one HRSG at a time	
		Limit annual HRSG maintenance to <2.7% of operating hours (10 days/HRSG)	
	Coking – SD/BH maintenance	Work practices (28% reduction of potential)	1,794 lb SO_2/hour
		Limit annual SD/BH maintenance to <1.4% of operating hours (5 days/year)	
	Pushing	Work practices	0.098 lb SO_2/ton coal
	Charging	Work practices	0.0003 lb/ton coal
H_2SO_4	Coking – main stack	SD/BH	Design for 95% removal efficiency
	Coking – HRSG maintenance	Work practices	
		Limit HRSG maintenance to one HRSG at a time	
		Limit annual HRSG maintenance to <2.7% of operating hours (10 days/HRSG)	25.4 lb H_2SO_4/hour
	Coking – SD/BH maintenance	Work practices (28% reduction of potential)	
		Limit annual SD/BH maintenance to <1.4% of operating hours (5 days/year)	91.5 lb H_2SO_4/hour

Table 5-15

(Continued)

Pollutant	Emission Unit	BACT Determination	Emission Level
NO_x	Coking - main stack	Staged combustion	1 lb/ton coal
	Coking - HRSG and SD/BH maintenance	Staged combustion	1 lb/ton coal
	Pushing	Work practices	0.019 lb NO_x/ton coal

BACT = Best Available Control Technology
BAT = Best Available Technology
CO = Carbon Monoxide
dscf = dry standard cubic foot
H_2SO_4 = Sulfuric Acid Mist
HRSG = Heat Recovery Steam Generator
NO_X = Nitrogen Oxides
PM = Particulate Matter
PM_{10} = Particulate matter less than 10 micrometers in diameter
ppm = parts per million
SD/BH = Spray Dryer/Baghouse
SO_2 = Sulfur Dioxide
TDS = Total Dissolved Solids

This page intentionally left blank.

6.0 AMBIENT AIR IMPACTS

As part of the planned construction, MCC will install and operate equipment that releases regulated air pollutants to the atmosphere. Most of these emissions will exceed thresholds that require review under PSD permitting regulations as administered by the Ohio EPA. These regulations can include assessment of air quality impacts to the local and regional area, as well as an examination of additional impacts from the project.

Further, HCl emissions will exceed the 1 ton/year Ohio EPA threshold for toxic air pollutants, which also requires a dispersion modeling assessment of potential ambient air impacts. The Ohio EPA also requested that MCC model mercury emissions from MCC sources.

MCC has conducted dispersion modeling required and requested by the Ohio EPA for the regulated pollutants exceeding threshold values. The results uniformly suggest that ambient air quality is protected in the vicinity of the proposed MCC facility. The modeling included:

- Modeling of operational scenarios where pollution control systems are out of service for maintenance, including:
  - Facility operation during HRSG maintenance and
  - Facility operation during SD/BH maintenance;
- Modeling of regulated criteria pollutant emissions based on maximum averaging period value assumptions; and
- Modeling of two toxic air pollutants (HCl and mercury) during typical HRSG maintenance and during maintenance and inspection of the SD/BH.

Using procedures consistent with PSD guidance, the modeling was completed using AERMOD (version 07026) with representative meteorological data processed in AERMET using a receptor grid beginning at the MCC boundary and receptor heights determined using AERMAP. Short-term emissions during the respective HRSG and SD/BH maintenance period were modeled as if occurring each day of the year. The resulting concentrations were compared with the significant impact levels to determine whether additional PSD increment and NAAQS modeling was required. HCl and mercury concentrations were compared to maximum acceptable ground-level concentrations (MAGLCs). The results show that:

- Some criteria pollutant (CO and NO_X) impacts are insignificant,
- Neither toxic air pollutant exceeds the MAGLC, and
- The remaining MCC pollutants (PM_{10} and SO_2) comply with PSD increment limits, both federal and Ohio's more stringent one-half increment, and the NAAQS.

6.1 Ohio EPA Required Modeling for MCC

The PSD regulations can include a need to demonstrate compliance with applicable ambient air quality standards and increments for any regulated criteria pollutant emitted in sufficient quantity from a quantifiable project. As detailed in previous sections of the application, emissions from the MCC facility are summarized in Table 6-1. A number of operations are associated with a heat recovery coke plant that include hot exhaust stack gases as well as materials handling and fugitive sources. MCC's design allows for the hot coke oven gases to be utilized in HRSGs.

Table 6-1

Heat Recovery Coke Plant Annual Emissions (tons/year)

	PM_{10}	SO_2	NO_X	CO	VOC	Lead	H_2SO_4
Heat Recovery Coke Plant	125.6	1,152.3	477.4	129.5	31.4	0.28	34.2

CO = Carbon Monoxide
H_2SO_4 = Sulfuric Acid Mist
NO_X = Nitrogen Oxides
PM_{10} = Particulate matter less than 10 micrometers in diameter
SO_2 = Sulfur Dioxide
VOC = Volatile Organic Compound

MCC typically will operate with all flue gases from the coke ovens going through the SD/BH and exhausted through the main stack. However, when maintenance is performed at the facility, other operating modes can change the location and amount of released pollutants. These were considered for the dispersion modeling and are described below as Cases 1 through 3.

- Case 1 – One of the five waste heat stacks may be open up to 10 days/year for maintenance of the HRSG. Coke ovens are charged with 50 tons of coal and up to 50 ovens are charged a day.
- Case 2 – Typically, 50 of the 100 ovens are charged with coal each day. If equipment problems cause delays, fewer than 50 ovens may be charged one day and more than

50 ovens may be charged the next day. Case 2 emissions correspond with maximum production, HRSG maintenance, and charging 75 ovens/day. As a conservative approach, short-term SO_2 was modeled at 550 lb/hour.

- Case 3 – The SD/BH system may need to be offline for maintenance up to 5 days/year. During these days, stack gases will be bypassed directly to the main stack. Case 3 corresponds with maximum production, SD/BH maintenance, and charging 75 ovens/day.

Short-term averaging period impacts were based on maximum emission cases for each pollutant. Annual averaging period impacts were based on the collective schedule previously described and the aggregate emissions based on operating periods. For example, NO_X was modeled on an annual basis assuming that both HRSG maintenance and SD/BH maintenance occurred during the year.

HCl and mercury were modeled in the HRSG maintenance mode with maximum production (Case 1) and the SD/BH maintenance mode with the maximum charging situation (Case 3).

The modeled MCC emissions inventory for Case 3 is tabulated in Table 6-2. The maximum short-term emission rates shown in Table 6-2 were based on the few days a year period when maintenance and inspection of the SD/BH system require coke oven flue gases to be exhausted to the atmosphere, bypassing the baghouse and spray dyer. Maintenance is conducted when needed and not on a routinely scheduled basis; therefore, it could occur at any time of the year. To simulate this type of activity and the unknown schedule, modeling for this short-term event was conducted as if it could happen each day of the year so that each 24-hour period is evaluated similarly and a worst-case short-term impact can be evaluated.

As shown in Table 6-2, emissions of the majority of pollutants are confined to a few emission points, whereas PM_{10} emissions associated with coal and coke handling as well as traffic dust extend across the MCC facility. To better characterize these fugitive emission sources, many of the nearby and same-type handling operations were grouped into area sources using the AERAPOLY approach. The fugitive emissions grouped into these modeled sources are shown in Table 6-2 in the third column, which indicates whether the source was modeled as a point source or was part of a combined source by a particular name (e.g., coalfug). The

This page intentionally left blank.

Table 6-2

MCC – Modeled Source Parameters

Source Description	Model ID	Type	Location (UTM)			Exhaust Parameters				Emission Rates (g/s)			
			X (m)	Y (m)	Z (m msl)	Height (m)	Temp (K)	Velocity (m/s)	Diameter (m)	CO	NO_X	PM_{10}	SO_2
Main Stack	mainabc	POINT	723661	4372312	200	64	464	17.8	3.96	2.7	13.1	13.2	226.0
Individual Waste Gas Stacks 1	waste11	POINT	723792	4372300	200	25.3	1311.1	21	2.74	0	0	0	0
Individual Waste Gas Stacks 2	waste12	POINT	723712	4372344	200	25.3	1311.1	21	2.74	0	0	0	0
Individual Waste Gas Stacks 3	waste13	POINT	723627	4372392	200	25.3	1311.1	21	2.74	0	0	0	0
Individual Waste Gas Stacks 4	waste14	POINT	723506	4372459	200	25.3	1311.1	21	2.74	0	0	0	0
Individual Waste Gas Stacks 5	waste15	POINT	723425	4372504	200	25.3	1311.1	21	2.74	0	0	0	0
Pushing	pushabc	POINT	723581	4372455	200	6.1	478	21.22	1.52	1.2	0.4	0.6	1.93
Charging (stack)	chargabc	POINT	723598	4372485	200	7.83	422.2	20.76	1.37	0.06		0.1	0.006
Coke Screening	cokecrsh	POINT	723620	4372283	200	10	-6	18.3	1.28			0.4	
Quench Tower	qunchabc	POINT	723576	4372422	200	30.5	342	4.2	11.9			0.9	
Coal Unloading	fug1	point	722852	4372719	200	0	0	0.01	0.1			1.57E-03	
To Unloader Conveyor	fug2	point	722851	4372714	200	0	0	0.01	0.1			7.87E-04	
Coal Transfer #1	fug3	point	722838	4372654	200	5	0	0.01	0.1			7.87E-04	
Transfer to Stacker Conveyor	fug5	coalfug	722891	4372567	200	2	0	0.01	0.1			1.57E-02	
Transfer to Stacker	fug6	coalfug	722891	4372567	200	15	0	0.01	0.1			1.57E-02	
Coal Storage Pile #1 In	fug7	coalfug	722936	4372581	200	15	0	0.01	0.1			7.87E-03	
Coal Storage Pile #1 (Dead Pile)	fug8	coalfug	722936	4372581	200	7.5	0	0.01	0.1			1.59E-02	
Coal Storage Pile#2 Out	fug9	coalfug	722936	4372581	200	2	0	0.01	0.1			7.87E-03	
Coal Transfer from Storage Pile #1 to Storage Pile #2	fug10	coalfug	722921	4372529	200	2	0	0.01	0.1			7.87E-03	
Coal Storage Pile In	fug11	coalfug	722844	4372563	200	15	0	0.01	0.1			7.87E-03	
Coal Storage Pile #2 (Live Pile)	fug12	coalfug	722844	4372563	200	7.5	0	0.01	0.1			1.72E-02	
Coal Storage Pile Out	fug13	coalfug	722844	4372563	200	0	0	0.01	0.1			7.87E-04	
Stacker (Front End Loadout)	fug14	coalfug	722880	4372522	200	2	0	0.01	0.1			3.15E-03	
Transfer to Stacker Reclaim Hopper	fug15	coalfug	722880	4372522	200	2	0	0.01	0.1			3.15E-03	
Transfer to Coal Crushing Tower	fug18	point	723342	4372416	200	15	0	0.01	0.1			7.87E-04	
Coal Crushing	fug19	point	723342	4372418	200	9	0	0.01	0.1			1.58E-02	
Transfer to Silo Feed Conveyor	fug20	point	723347	4372436	200	4	0	0.01	0.1			7.87E-04	
Transfer to Silo	fug21	point	723388	4372620	200	40	0	0.01	0.1			7.87E-04	
Transfer to Batch Bin	fug22	point	723388	4372620	200	20	0	0.01	0.1			7.87E-04	
Transfer to tripper conveyor	fug23	coalfug	723640	4372478	200	2	0	0.01	0.1			1.57E-02	
Tripper point 1	fug24	coalfug	723598	4372485	200	7	0	0.01	0.1			1.57E-02	
Tripper point 2	fug25	coalfug	723598	4372485	200	7	0	0.01	0.1			1.57E-02	
Tripper point 3	fug26	coalfug	723598	4372485	200	7	0	0.01	0.1			1.57E-02	
Coke from Hot Car to Quench Car	fug27	point	723577	4372446	200	2	0	0.01	0.1			5.64E-03	
Coke from Quench Car to Wharf	fug28	point	723576	4372422	200	0	0	0.01	0.1			1.13E-02	
Transfer to Wharf conveyor	fug29	point	723572	4372400	200	0	0	0.01	0.1			1.13E-02	
Coke Transfer #1	fug30	cokfug	723524	4372319	200	2	0	0.01	0.1			5.64E-04	
Coke Transfer (Stacking Conveyor)	fug31	cokfug	723524	4372319	200	2	0	0.01	0.1			1.69E-03	
Coke emergency storage pile in	fug32	cokfug	723473	4372318	200	14	0	0.01	0.1			1.13E-02	
Coke emergency storage pile wind	fug33	cokfug	723473	4372318	200	7	0	0.01	0.1			8.63E-03	
Coke emergency storage pile out	fug34	cokfug	723473	4372318	200	2	0	0.01	0.1			1.13E-02	
Unloading to Coke Reclaim Hopper	fug35	cokfug	723542	4372351	200	2	0	0.01	0.1			1.13E-02	
Coke Transfer (Plant Feed Conveyor)	fug36	cokfug	723524	4372319	200	20	0	0.01	0.1			2.03E-03	

This page intentionally left blank.

Table 6-2
(Continued)

Source Description	Model ID	Type	Location (UTM)			Exhaust Parameters				Emission Rates (g/s)			
			X (m)	Y (m)	Z (m msl)	Height (m)	Temp (K)	Velocity (m/s)	Diameter (m)	CO	NO_X	PM_{10}	SO_2
Transfer to Screening Station	fug37	cokfug	723620	4372283	200	25	0	0.01	0.1			2.03E-03	
Transfer to Recirculating Conveyor	fug38	cokfug	723620	4372283	200	12	0	0.01	0.1			3.38E-04	
Recirculating Transfer to Plant Feed Conveyor	fug39	cokfug	723527	4372317	200	12	0	0.01	0.1			3.38E-04	
Transfer Breeze to Bunker	fug40	cokfug	723620	4372283	200	5	0	0.01	0.1			1.05E-04	
Breeze loadout at bunker	fug41	cokfug	723620	4372283	200	5	0	0.01	0.1			1.05E-04	
Emergency Breeze Pile In	fug42	cokfug	723556	4372331	200	2	0	0.01	0.1			7.00E-04	
Emergency Breeze Pile	fug43	cokfug	723556	4372331	200	2	0	0.01	0.1			5.64E-03	
Emergency Breeze Pile Out	fug44	cokfug	723556	4372331	200	2	0	0.01	0.1			7.00E-04	
Transfer to coke product conveyor	fug45	cokfug	723620	4372283	200	12	0	0.01	0.1			1.69E-03	
Coke Transfer #2	fug46	cokfug	723782	4372222	200	12	0	0.01	0.1			5.64E-04	
Transfer to screened coke stacker conveyor	fug47	cokfug	723782	4372222	200	12	0	0.01	0.1			1.69E-03	
Emergency Screened coke storage pile in	fug48	cokfug	723749	4372254	200	12	0	0.01	0.1			1.06E-02	
Emergency Screened coke storage pile	fug49	cokfug	723749	4372254	200	6	0	0.01	0.1			1.73E-03	
Emergency Screened coke storage pile out	fug50	cokfug	723749	4372254	200	2	0	0.01	0.1			1.06E-02	
Unloading to Screened Coke Reclaim Hopper	fug51	cokfug	723791	4372228	200	2	0	0.01	0.1			1.13E-02	
Coke Transfer #3	fug52	point	723908	4372321	200	9	0	0.01	0.1			5.64E-04	
Coke Transfer #4	fug53	point	724197	4372317	200	9	0	0.01	0.1			5.64E-04	
Coke Rail Loadout Transfer #1	fug55	point	723347	4372322	200	9	0	0.01	0.1			5.64E-04	
Coke Rail Loadout Transfer #2	fug56	point	723051	4372344	200	9	0	0.01	0.1			5.64E-04	
Coke Rail Loadout Transfer #3	fug57	point	723048	4372308	200	9	0	0.01	0.1			5.64E-04	
Transfer to coke loadout conveyor	fug59	point	723618	4372278	200	9	0	0.01	0.1			1.69E-03	
Coke Rail Loadout	fug60	point	723048	4372308	200	9	0	0.01	0.1			1.69E-03	
Charging fugitive	fug61	point	723598	4372485	200	9	0	0.01	0.1			1.59E-02	
Lime Silo	fug62	point	723592	4372355	200	22	0	0.01	0.1			3.88E-03	
SD/BH Silo	fug63	point	723611	4372321	200	37	0	0.01	0.1			2.68E-04	
Coal Handling Fugitive Sources 4-16	coalfug	areapoly	722990	4372654	200								
	coalfug	2.84E-06	7.7	4	2								
	AREAVERT	coalfug	722990	4372654									
	AREAVERT	coalfug	723047	4372634									
	AREAVERT	coalfug	722893	4372360									
	AREAVERT	coalfug	722844	4372394									
Coke Handling Fugitive Sources 30-51	cokfug	areapoly	723529	4372404	200								
	cokfug	2.22E-06	7.8	6	2								
	AREAVERT	cokfug	723529	4372404									
	AREAVERT	cokfug	723605	4372324									
	AREAVERT	cokfug	723703	4372320									
	AREAVERT	cokfug	723750	4372264									
	AREAVERT	cokfug	723620	4372264									
	AREAVERT	cokfug	723445	4372344									
Vehicle Roadway Dust Fugitive Emissions	fug64	areapoly	723308	4372704	200								
	fug64	7.695E-08	1	4	2								
	AREAVERT	fug64	723308	4372704									
	AREAVERT	fug64	723857	4372354									
	AREAVERT	fug64	723738	4372244									
	AREAVERT	fug64	723173	4372294									

This page intentionally left blank.

dimensions of these combined emission sources were based on the area of the physical activity. The emission rates calculated and shown in Table 6-2 for the area sources are per unit areas ($g/s/m^2$), and the release parameters were based on average release heights.

The locations of these sources are shown in Figure 6-1 with the area source boundaries also depicted. As shown in Figure 6-1, the area sources combine nearby, like-type emissions.

6.2 AERMOD Model Input Parameters and Results

The proposed location of MCC as shown in Figure 2-5 highlights a nearby fenced boundary, which is determined the beginning of ambient air, or that portion to which the general public has access. This boundary is also shown in Figure 6-1.

A discrete grid of receptors beginning at this ambient air boundary was used to calculate ground-level ambient air concentrations for comparison with standards and increment levels. The receptor grid spacing is nominally 25 m at the boundary and 100 m outward of that. Beyond the 100-m grid, receptors are spaced at 250 and 500 m out to 3 km. The receptor grid used is shown in Figure 6-2. Receptor heights were determined using AERMAP and available digital elevation model (DEM) data as obtained from the U.S. Geological Survey.

The DEM model data used are depicted as shaded relief images with the grid overlaid as shown in Figure 6-3.

Five years of representative meteorological data as determined by the Ohio EPA were used and included the 5-year period (1987–1991) of surface data from the Cincinnati/Covington airport along with Dayton upper air. These data were processed in AERMET using the surface geophysical parameters as shown in Table 6-3. These parameters were determined to be appropriate for the airport measurement site. A wind rose is shown in Figure 6-4. Processing of the AERMET data was done using AERSURFACE and the 1992 land use data.

This page intentionally left blank.

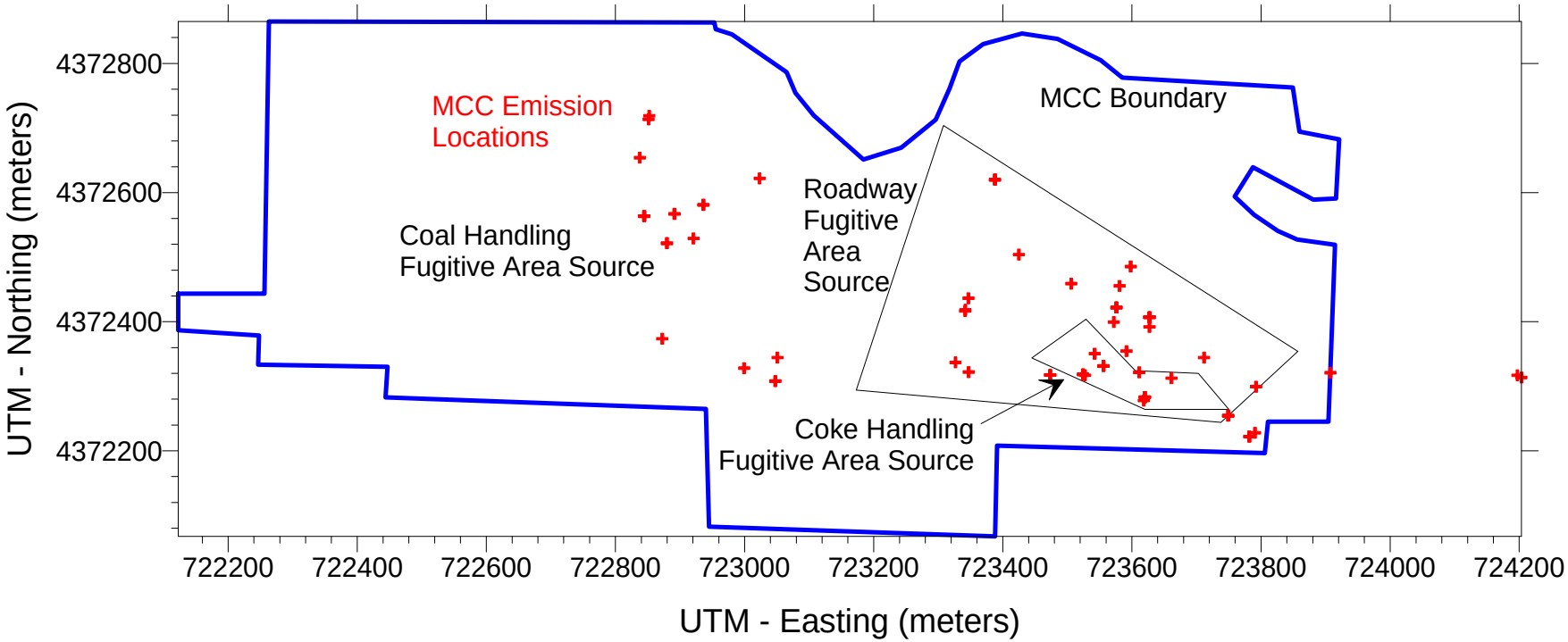

Figure 6-1. MCC Emission Locations and Area Source Combinations

This page intentionally left blank.

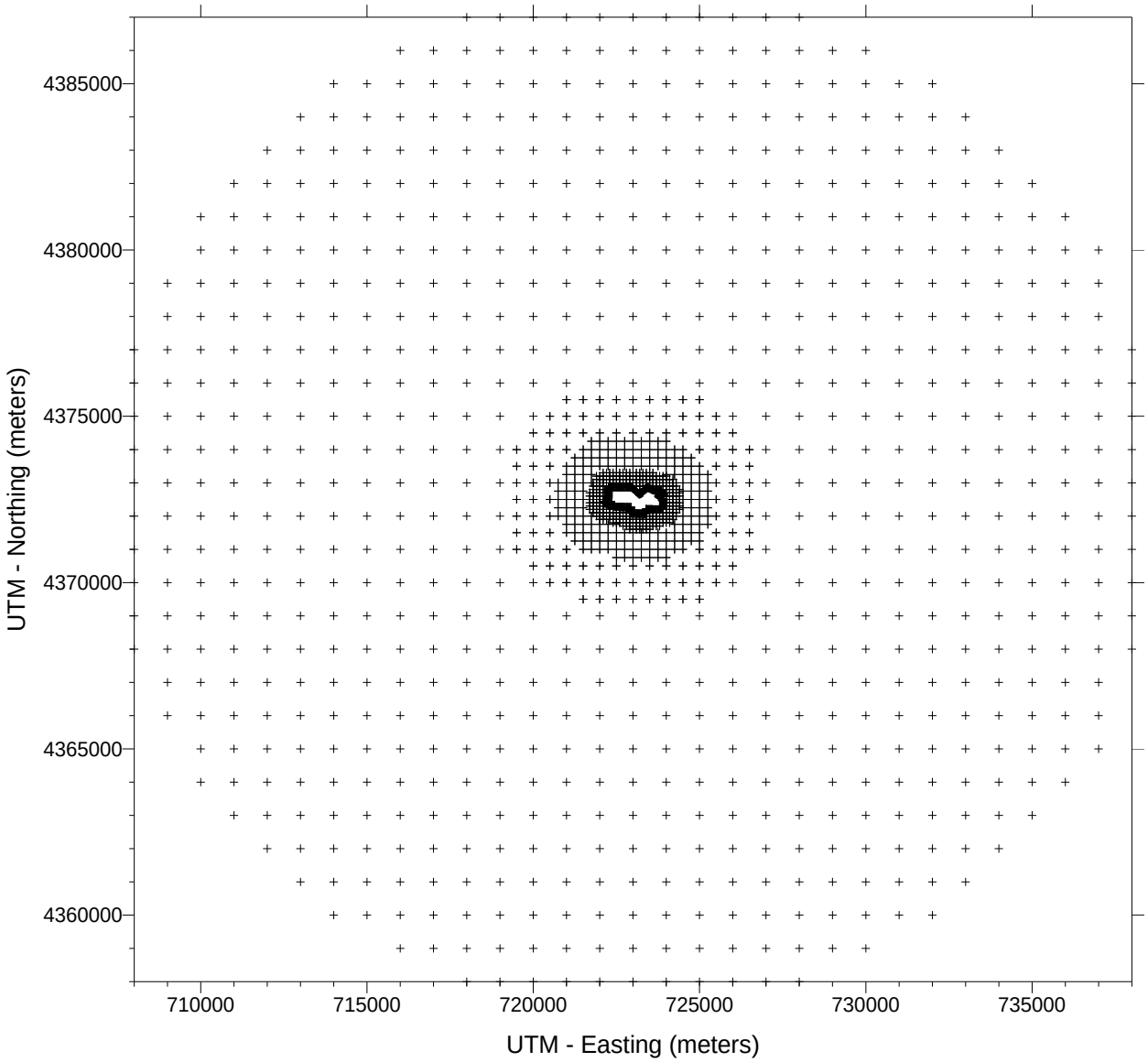

Figure 6-2. MCC Receptor Grid and Source Locations

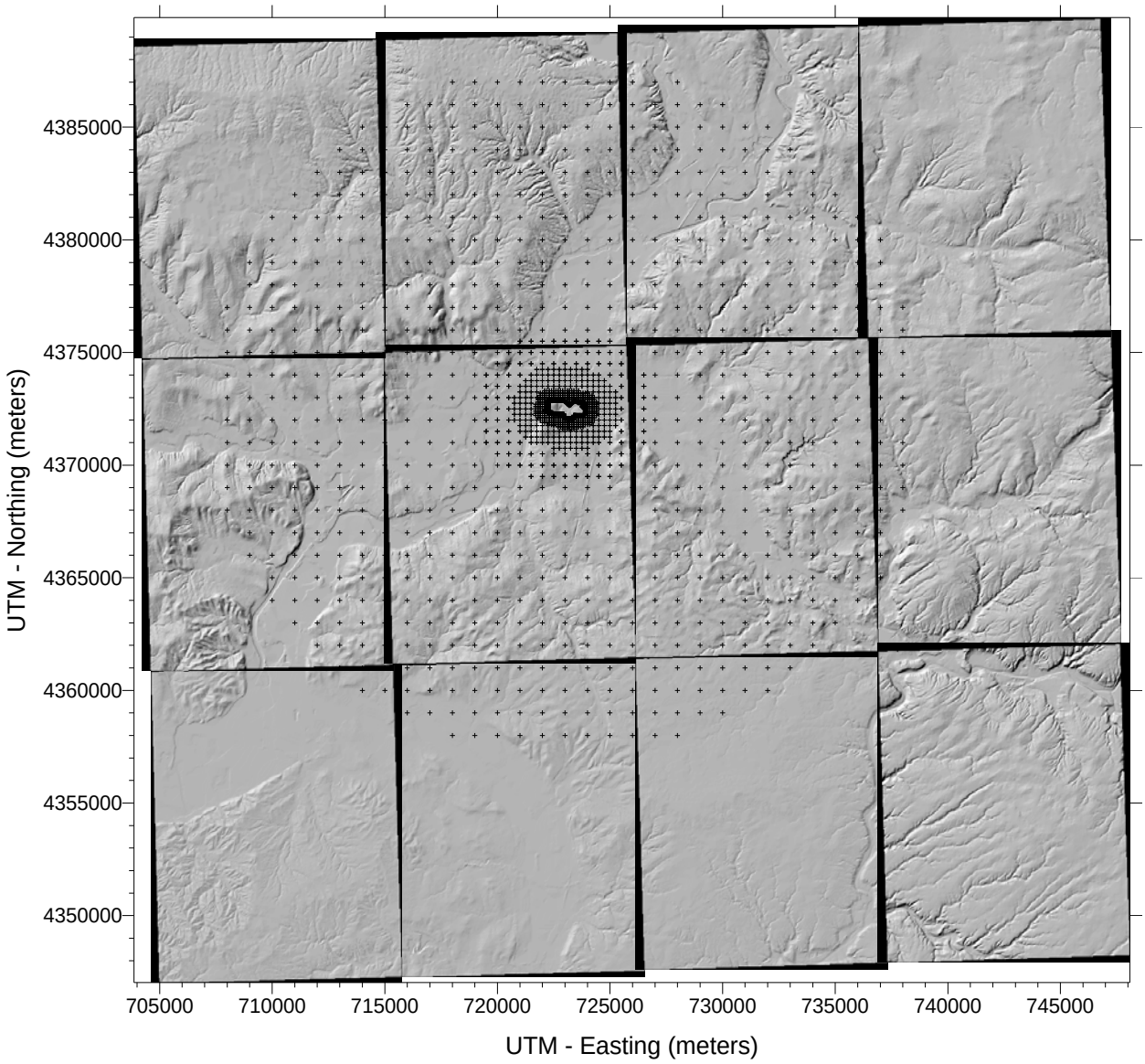

Figure 6-3. MCC Receptor Grid and Shaded Relief of Surrounding Terrain

Table 6-3
AERMET – Geophysical Parameters Used in Meteorological Data Processing by Sector and Season (Spring, Summer, Fall, and Winter)

Sector Number and Orientation	Albedo	Bowen Ratio	Surface Roughness
Sector 1 0-180	0.17	0.8	0.052
	0.17	0.8	0.04
	0.17	0.8	0.025
	0.17	0.8	0.046
Sector 2 180-230	0.15	0.5	0.06
	0.15	0.5	0.05
	0.15	0.5	0.035
	0.15	0.5	0.059
Sector 3 230-280	0.17	0.45	0.066
	0.17	0.45	0.058
	0.17	0.45	0.044
	0.17	0.45	0.082
Sector 4 280 –360	0.17	0.79	0.06
	0.17	0.79	0.051
	0.17	0.79	0.036
	0.17	0.79	0.073

Note: 0 and 360 are degrees north. Parameters reflect measurement site.

Direction-specific downwash values were determined based on Building Profile Input Program (bpip) files as analyzed by the PRIME version of bpip. The files were also used to satisfy that none of the proposed stacks exceeds good engineering practice (GEP) stack heights.

These ancillary inputs were provided to AERMOD in support of the MCC modeling assessment. Using these inputs and the emission inventory shown in Table 6-2, the AERMOD model was run for each pollutant and year of meteorological data.

The modeling results for solely MCC's project emissions are shown in Table 6-4. As the table indicates, the MCC facility will meet Ohio's one-half increment standard for all pollutants. The applicable Ohio PSD increment standard for a project's emissions is set at half the federally mandated standard.

Table 6-4 also shows that only the impacts of PM_{10} and SO_2 potentially exceeded the significant impact threshold values, requiring additional modeling. While the significant impact area (SIA) associated with SO_2 was well beyond the MCC facility boundary (approximately 40 km), because of the number of fugitive emissions and the generally poorer dispersive capacity

This page intentionally left blank.

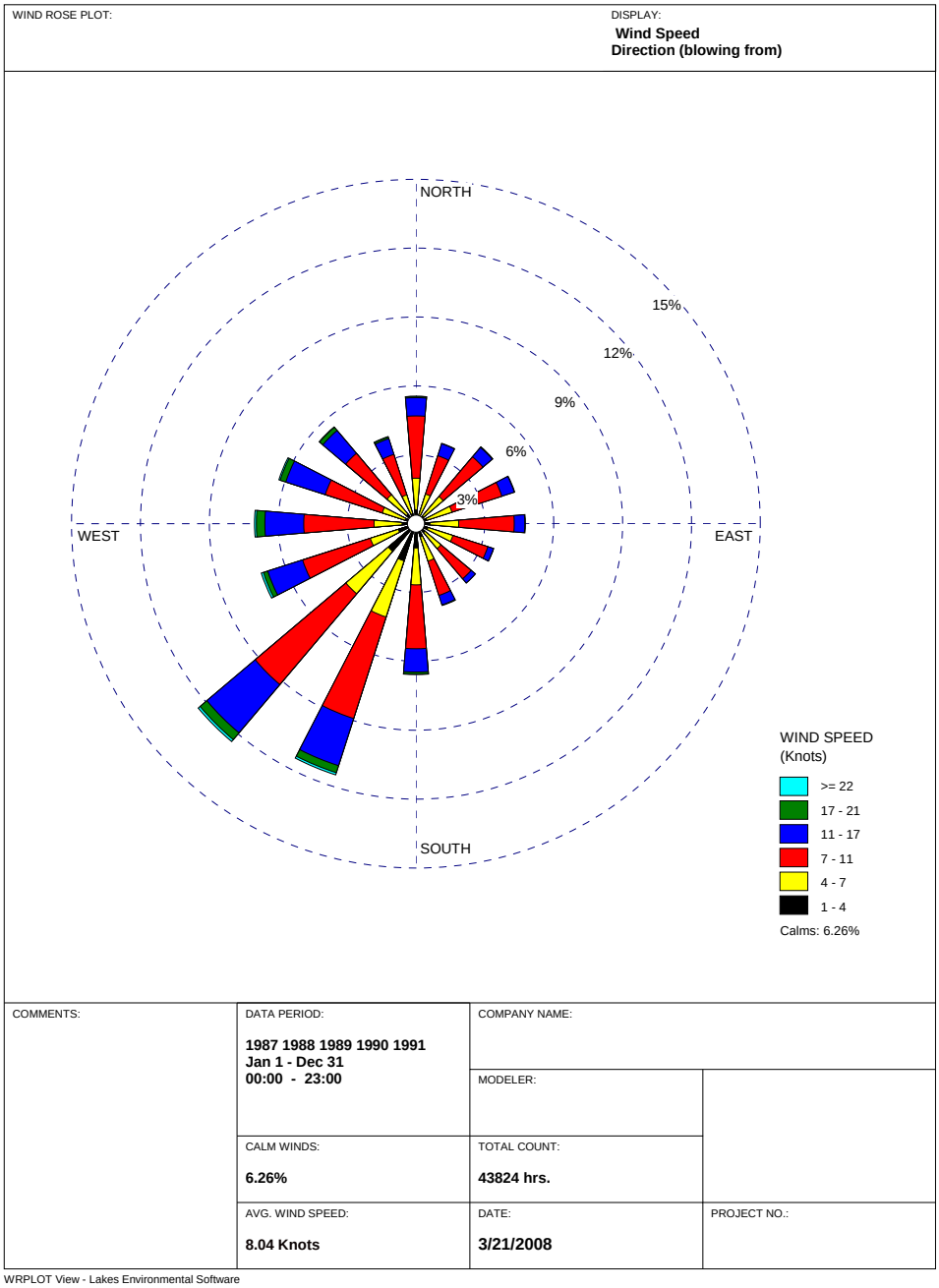

Figure 6-4. Wind Rose of Surface Data (1987-1991) from Cincinnati/Covington

This page intentionally left blank.

Table 6-4

MCC – Maximum Modeled Pollutant Concentrations and Comparisons with Thresholds

Pollutant	Averaging Period	Maximum Modeled Concentration ($\mu g/m^3$)	Highest Second-Highest Modeled Concentration ($\mu g/m^3$)	Location of Maximum Modeled Concentration			Threshold Levels ($\mu g/m^3$)	Does MCC Impact Exceed Threshold?	Ohio Acceptable Increment Levels ($\mu g/m^3$)	Does MCC Impact Exceed Increment?
				X (m)	Y (m)	Z m msl				
CO	1-hour	48.2	36.5	723631	4372201	207	2,000	No	10,000	No
	8-hour	21.4	12.1	723631	4372201	207	500	No	2,500	No
NO_2	Annual	0.51	--	724200	4373000	200	1	No	12.5	No
PM_{10}	24-hour	19.1	14.3	723581	4372203	207	5	Yes	15	No
	Annual	3.2	--	723759	4372594	193	1	Yes	8.5	No
SO_2	3-hour	163.3	146.7	724200	4372100	203	25	Yes	256	No
	24-hour	50	44.2	723800	4371700	207	5	Yes	45.5	No
	Annual	6.4	--	724200	4373000	200	1	Yes	10	No
HCl	1-hour	38.1	--	723750	437400	199	122.8	No	--	No
Mercury	1-hour	0.0044	--	723750	437400	199	0.595	No	--	No

Notes:
Highest second-highest values for comparison with Ohio acceptable increment levels for short-term averaging periods.
NO_2 modeled concentration converted using 0.75 ARM (0.69 $\mu g/m^3$ NO_X * 0.75 ARM = 0.51 $\mu g/m^3$ NO_2).
HCl MAGLC calculated from TLV of 7.0 mg/m^3 (7.0 mg/m^3 = 7000 $\mu g/m^3$ * 0.737 * 4 / (24*7) = 122.8 $\mu g/m^3$).
Hg MAGLC calculated from TLV of 0.025 mg/m^3 (0.025 mg/m^3 = 25 $\mu g/m^3$ * 4 / (24*7) = 0.595 $\mu g/m^3$).

CO = Carbon Monoxide
HCl = Hydrogen Chloride
MCC = Middletown Coke Company
NO_2 = Nitrogen Dioxide
PM_{10} = Particulate Matter less than 10 micrometers in diameter
SO_2 = Sulfur Dioxide

of these types of sources, the SIA for PM_{10} was found to be much nearer the MCC facility (approximately 3 km) as depicted in Figure 6-5.

Because these pollutant impacts could conceivably "cause or contribute" to a violation on an increment or NAAQS, further modeling, including assessing contributions from an off-site inventory, was done. To complete this additional modeling, Ohio EPA provided representative background concentrations for both pollutants as suitably characterizing the background air quality of the MCC project area. Therefore, no preconstruction monitoring was required for the MCC project.

Along with appropriate background monitoring values, Ohio EPA provided an emission inventory of increment consuming sources, which was also modeled. The results of the increment modeling (MCC emissions and off-site inventory) are shown in Table 6-5. As shown, compliance with the federal increment levels is demonstrable. The values shown in Table 6-5 represent the combined impacts of MCC and the off-site source inventory. The direct MCC increment impacts are shown in Table 6-4 and can be compared with the combined increment levels in Table 6-5. As previously described, the Ohio increment standards are set at half the federally mandated levels, and as shown by the results in Table 6-4, the MCC impacts do not exceed the Ohio EPA half-increment levels for both PM_{10} and SO_2.

An NAAQS inventory was also obtained from Ohio EPA for both pollutants. The relative locations of these NAAQS inventory sources compared with MCC is shown in Figure 6-6. The results of the NAAQS modeling are provided in Table 6-6.

As shown, the MCC plus inventory impacts return an aggregate modeled concentration together with ambient background values less than the respective NAAQS. Again, the modeling is conservatively based on the SD/BH maintenance case as if occurring each day of the year. Even so, as shown in Table 6-6, compliance with the NAAQS is demonstrable for SO_2.

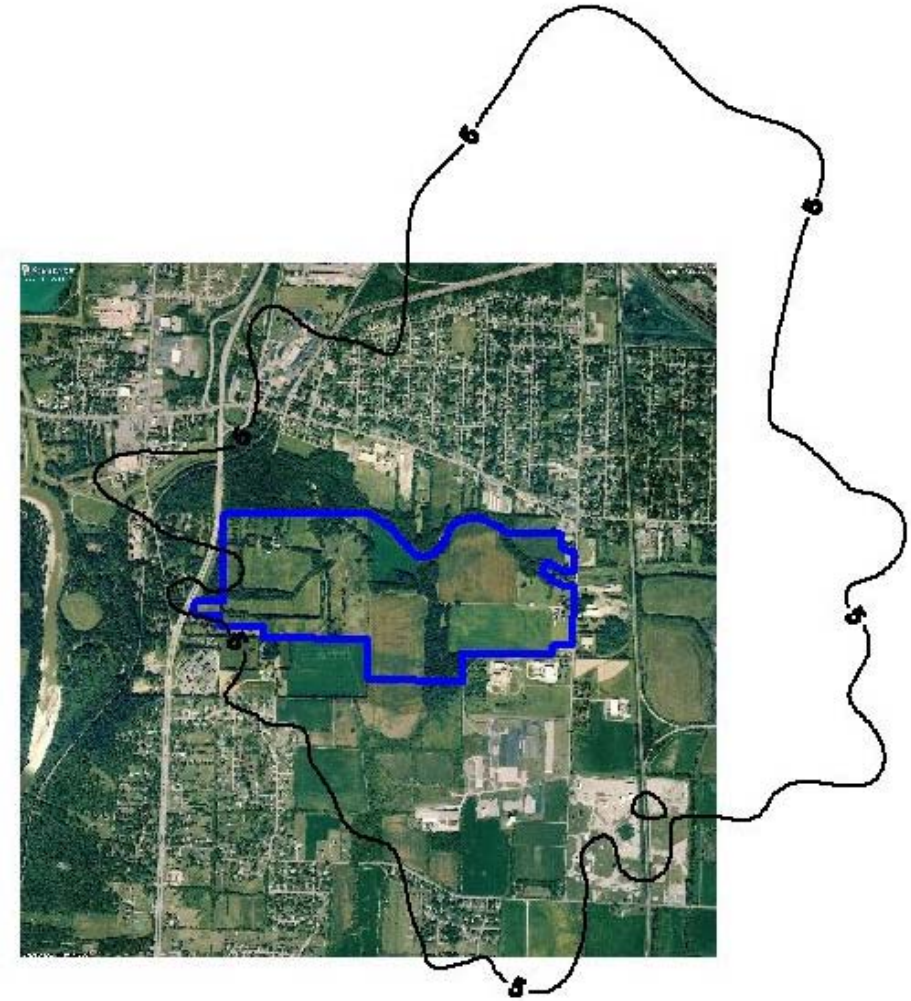

Figure 6-5. MCC – PM_{10} 24-hour Significant Impact Area Atop Aerial

(MCC Boundary shown in blue, SIA shown in black, aerial photograph is 3.3 km long)

This page intentionally left blank.

Table 6-5

Maximum Modeled MCC and PSD Increment Inventory Impacts

Pollutant	Averaging Period	MCC and Off-Site Source Inventory Maximum Modeled Concentration ($\mu g/m^3$)	Location of Maximum Modeled Concentration		Federal PSD Increment ($\mu g/m^3$)	PSD Increment Exceeded?
			X (m)	Y (m)		
SO_2 – All	3-hour	171.5	724300	4372900	512	No
	24-hour	59.5	724300	4372700	91	No
	Annual	8.5	724200	4373000	20	No
PM_{10} – All	24-hour	27.3	723910	4372394	30	No
	Annual	6.6	723759	4372594	17	No

Notes: Short-term values are highest-second-highest concentrations.

MCC = Middletown Coke Company
PM_{10} = Particulate Matter less than 10 micrometers in diameter
PSD = Prevention of Significant Deterioration
SO_2 = Sulfur Dioxide

This page intentionally left blank.

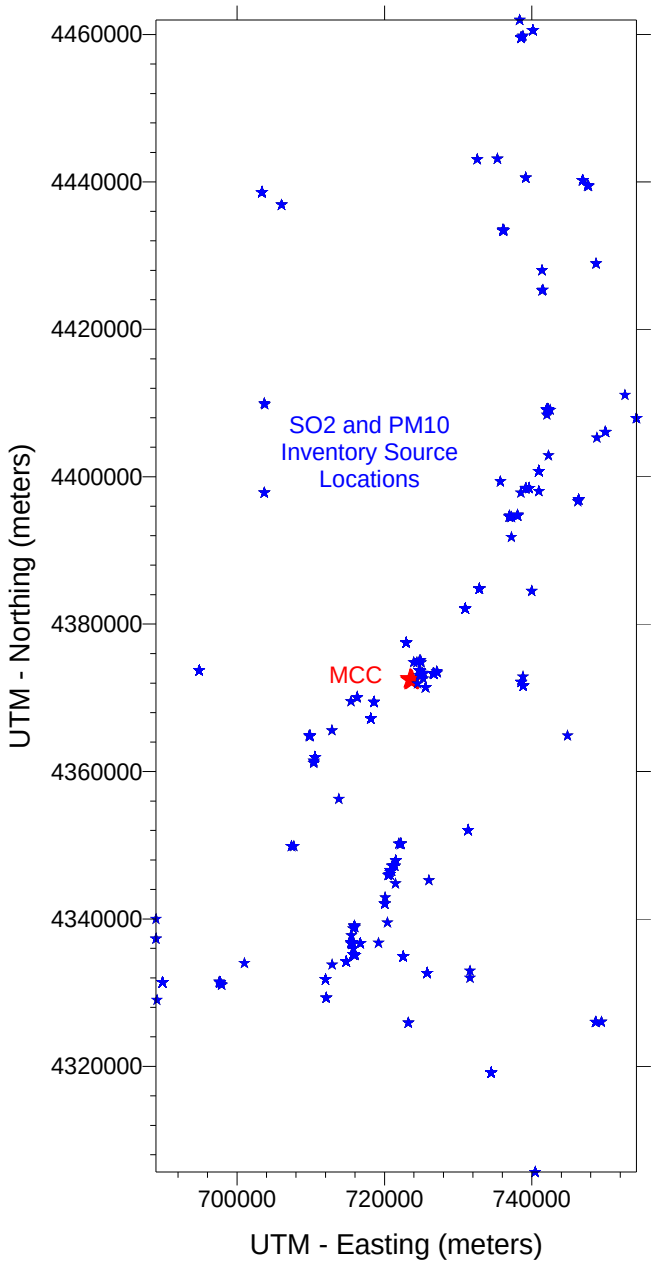

Figure 6-6. MCC – Location of Off-Site Inventory Modeled Sources

This page intentionally left blank.

Table 6-6

Maximum Modeled MCC and Off-Site Inventory Impacts

Pollutant	Averaging Period	Maximum Modeled Concentration ($\mu g/m^3$)	Location of Maximum Modeled Concentration		Ambient Background Concentration ($\mu g/m^3$)	Total Impact ($\mu g/m^3$)	NAAQS ($\mu g/m^3$)
			X (m)	Y (m)			
SO_2 – All	3-hour	636.3	727000	4359000	151.96	788.3	1,300
	24-hour	184.6	728000	4358000	49.78	234.4	365
	Annual	40.3	711000	4363000	10.7	51	80
PM_{10} – All	24-hour	294.2	725500	4373000	47	341.2	150
PM_{10} - AKS	24-hour	292.4	725500	4373000	47	339.4	150

Notes: AKS is the 24-hour concentration due to AK Steel sources only. Short-term values are highest-second-highest concentrations.

MCC = Middletown Coke Company
NAAQS = National Ambient Air Quality Standards
PM_{10} = Particulate Matter less than 10 micrometers in diameter
SO_2 = Sulfur Dioxide

However, for short-term PM_{10} concentrations, the modeled impacts potentially exceed the NAAQS. The impacts of PM_{10} are primarily due to AK Steel sources and are located at receptors within the AK Steel boundary. Because a source does not need to quantify its impacts at receptors within its boundary, removing the AK Steel impacts from these receptors returns compliant NAAQS values. This was done by examining each 24-hour period for which impacts could exceed 100 $\mu g/m^3$ (which when added to the background of 47 $\mu g/m^3$ would be near the standard). These periods were compared with the MCC maximum facility impact to determine whether MCC could cause or contribute to a violation of the NAAQS (i.e., have a significant impact at that receptor and 24-hour period). None were found to occur, and removing the AK Steel impacts from receptors within its boundary returned PM_{10} 24-hour values in compliance with the NAAQS.

Again, the PM_{10} modeling used the same assumptions as the SO_2 inventory assessment and therefore is quite conservative.

7.0 ADDITIONAL IMPACT ANALYSIS

Under the PSD regulations, an additional air quality impact analysis is a required component of the air quality permit application. The additional impacts analysis is an evaluation of:

- General commercial, residential, industrial, and other growth associated with the proposed source;
- The air quality impact projected for the area as a result of the general growth previously described; and
- The impairment to visibility, soils, and vegetation (having commercial or recreational value) that would result from the proposed source.

For a proposed facility that could impact a Class I area, an applicant should address:

- The air quality impact projected for any nearby Class I areas and
- The visibility impact on any nearby Class I areas.

The MCC facility will be built on approximately 250 acres within the southern limits of Middletown, Ohio. The entire MCC facility site is almost exclusively comprised of agricultural land. The agricultural land on the eastern portion of the site is used primarily for the cultivation of corn, soybeans, and winter wheat. The agricultural land on the western half of MCC consists primarily of old fields and abandoned cattle and/or horse pastures.

Because of the nature of the project area and the level of emissions associated with the MCC project, there will be little additional impact. There will be some construction-related activity limited to short-term and near source-specific areas, but because of the infrastructure nearby and in place, no longer term growth or project associated air quality impacts beyond what has already been described will occur. Since the project is to be located near an existing industrial area that will experience emission reductions in existing emissions of PM as well as sulfur and nitrogen compounds, there should be little to no adverse project impacts on local air quality. Furthermore, as detailed in Section 6 of the PTI application, the future ambient pollutant concentrations after the facility becomes operational have been projected to be less than the

primary and secondary NAAQS, suggesting the project will not adversely impact soils or vegetation in the area. Finally, given the distance from the project site to the nearest Class I area and because of the emission reductions previously mentioned, no adverse project impacts on Class I areas is expected.

7.1 Growth

The growth analysis includes a projection of the associated industrial, commercial, and residential growth that may occur due to construction and operation of the MCC facility. The MCC project represents an investment of several hundred million dollars in Butler County. Once operational, the facility will generate approximately 614,000 tons of much needed furnace coke per year. The facility will also add 52 MW of electrical generation capacity. All projects of this size provide an economic benefit to the local host community. The most obvious benefits are additional tax revenues, which school systems often use, and new jobs. The project will create the need for short-term construction jobs during the construction phase. Construction employment is expected to peak with over 500 workers across the entire plant. Once the facility is operational, it will employ about 75 positions, with a new payroll of about $5 million/year (excluding the cost of employee benefits). Third party contractors will also be employed for operation and maintenance support services. Since it is presumed that the operations workforce will reside within the region, they will pay taxes and purchase goods and services regionally, providing direct positive benefits to the regional economy. In addition to the enormous economic and social benefits the facility brings, it employs a process in which its source material is coal that will be mined in the region, providing economic benefits in those localities as well. Finally, a byproduct of the coke making process is electricity. Producing electric power from the coke oven waste heat will reduce emissions that would otherwise be produced by coal-fired generators and other fossil-fired sources in Ohio.

Although there is anticipated economic benefit for the area due to the construction and operation of the proposed facility, the impact on air quality from any ancillary commercial, residential, or industrial operations due to regional growth attributed to the MCC facility should be negligible. It is anticipated that most of the workforce will come from the regional area. Currently, the unemployment rate of the region ranges from 8.8% in Warren County to 13.1% in

Preble County. The unemployment rate in Butler County is currently 9.4% (Ohio Department of Job and Family Services, Bureau of Labor Market information). Few if any of the new positions would include facility staffing with unique or specialty skills not found regionally. Thus, it is believed that ample skilled workers are available from the local workforce to staff the facility. Given that the existing infrastructure is sufficient to accommodate personnel associated with this new project, no adverse impacts to the surrounding environment based on "growth" is expected.

Short-term construction emissions will occur while the coke facilities are being built. Emissions of fugitive dust during construction will be minimized by employing controls such as watering of unpaved roads, flushing of paved roads, vegetating disturbed surfaces and stockpiled materials as soon as practicable, and other measures so that short-term daily construction impacts will not likely exceed those already occurring from current nearby activities. Therefore, short-term construction impacts should be minimal and not pose a threat to ambient air quality.

7.2 Soils, Vegetation, and Endangered Species Impacts

The U.S. Department of Agriculture provides surveys of the surrounding soils and land use suitability for crop and other uses. Soil surveys of the project area were evaluated to determine the suitability of local soils to support playground/recreational activities. The soil data were also evaluated to determine their suitability to be used for pasture and hayland purposes. This data is show graphically in Figures 7-1 and 7-2. This survey suggests that soils in the general area are suitable, albeit localized, for pasture/hayland, but generally not suitable for recreational/playground usage. EPA guidance on determining the effects of emissions on soils is limited and suggests that such impacts can be screened through the potential impacts on vegetation growing in soils exposed to potential pollutant emissions. EPA also states that, when the amount of an atmospheric pollutant entering a soil system is sufficiently small, the natural ecosystem can adapt to these small changes in much the same way as the ecosystem adapts to the natural weathering process that occurs in all soils. As described in this application, the amount of additional emissions is small compared to existing region-wide emission levels. Also, the MCC facility's $PM_{2.5}$, NO_x, and SO_2 emissions will be totally offset by reductions, mainly from AK Steel; therefore, no additional emissions of these pollutants will occur. A discussion of the potential facility impact to vegetation follows.

This page intentionally left blank.

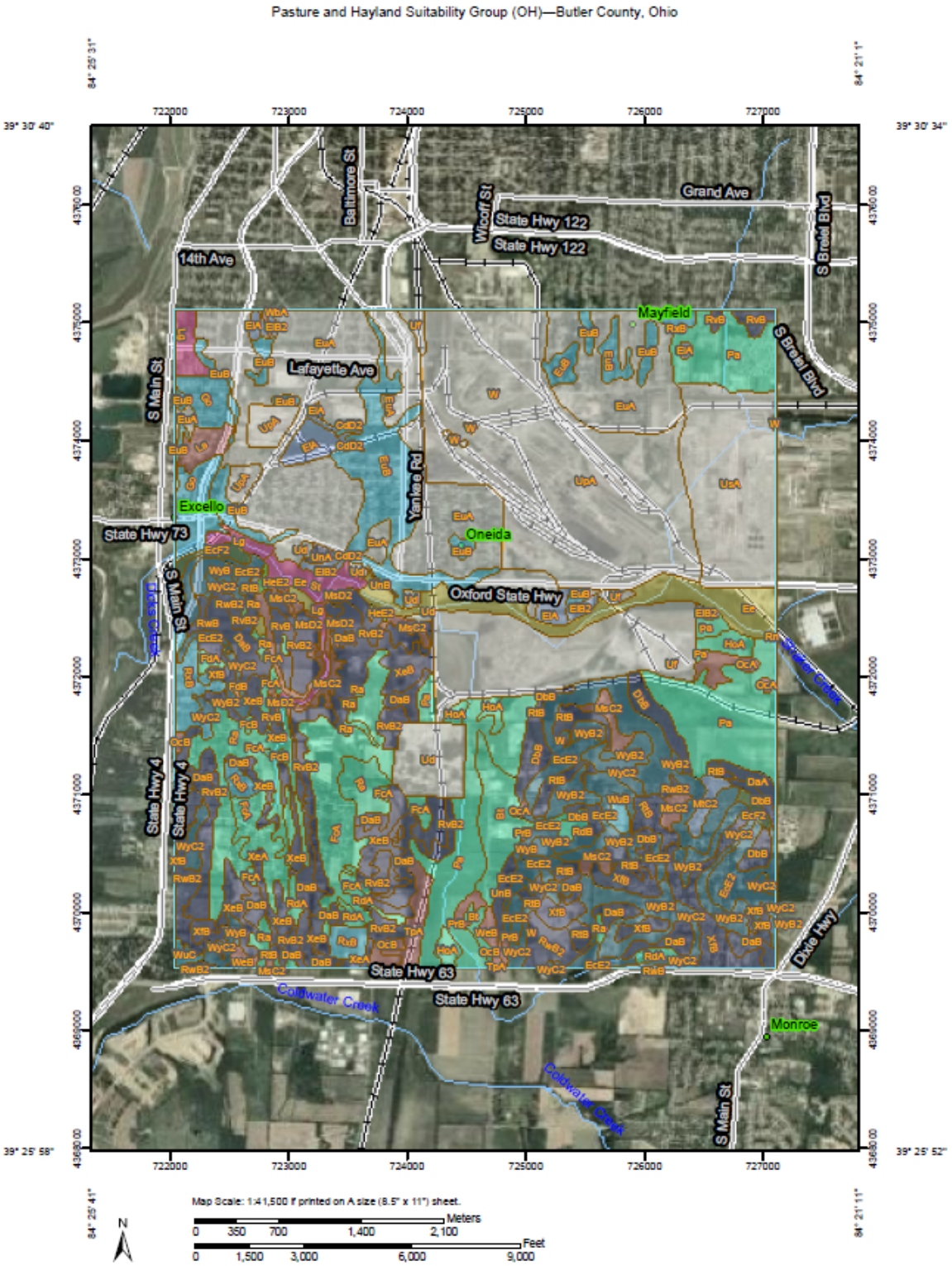

Figure 7-1. MCC – Soil Survey and Pasture and Hayland Suitability Map (USDA)

This page intentionally left blank.

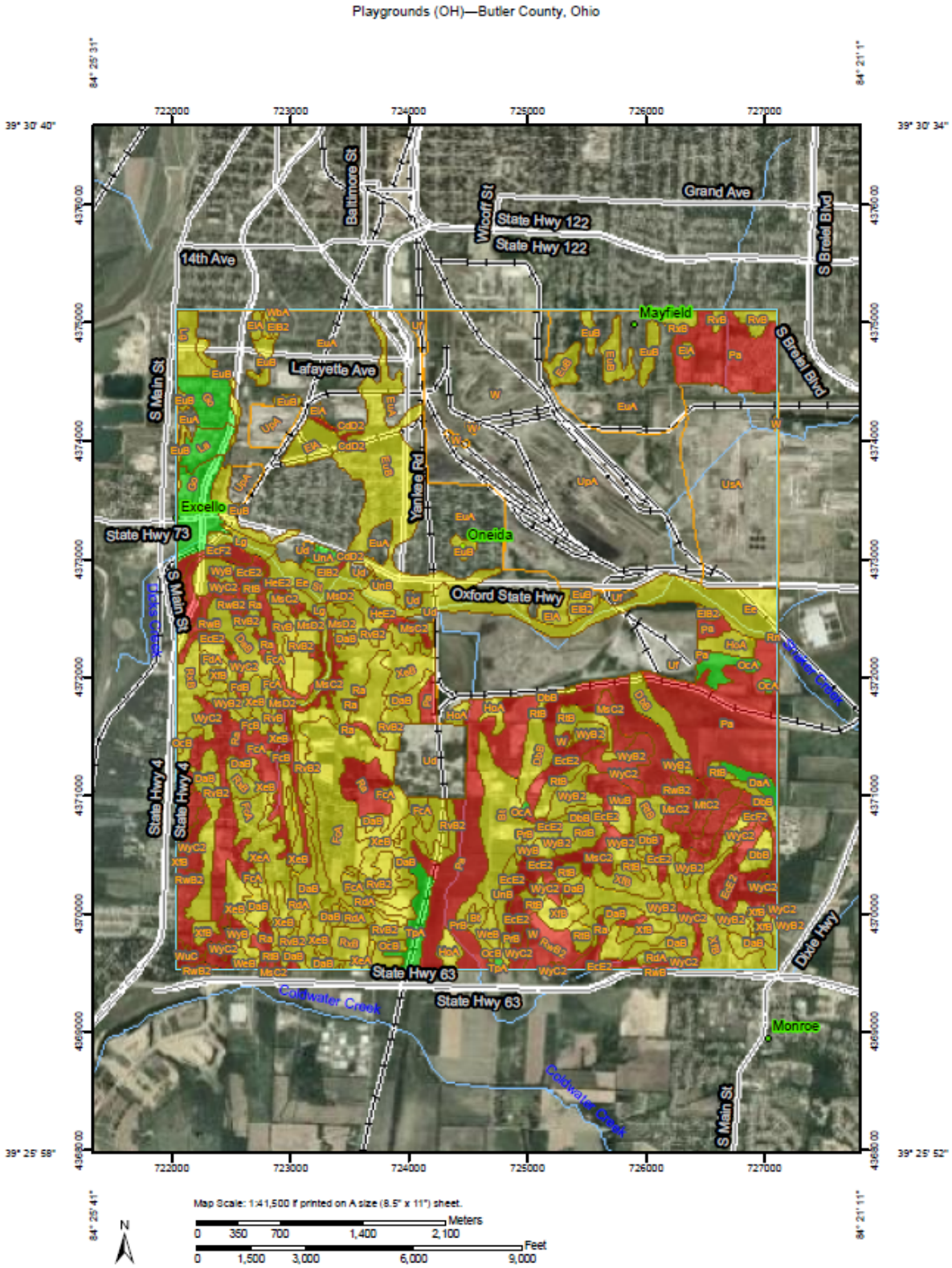

Figure 7-2. MCC – Soil Survey and Playground Suitability Map (USDA)

(Red is very limited; yellow is somewhat limited; green is unlimited)

This page intentionally left blank.

Agriculture is a significant industry in Butler and neighboring counties. Farms comprised over 127,000 acres in Butler County in 2007. In 2007, the market value of agricultural products sold that were derived from Butler County was nearly $39 million with approximately $26 million attributed to crop sales. The U.S. Department of Agriculture (USDA) compiles a survey of vegetative species having commercial value in Butler County. The survey shows that grains (including corn and soybeans), oilseeds, dry beans, and dry peas represent the largest crop commodity group with sales of over $21 million. Corn for grain is grown on 35.8 million acres, soybeans for beans are grown on 35.3 million acres, and 13 million acres are used for forage land (hay, haylage, grass silage, and greenchop). Another 4,000 acres are used to grow wheat for grain, while 1000 acres are used to grow corn for silage (USDA 2007).

The principal pollutants emitted by the MCC facility are PM, SO_2, NO_x, and CO. Other pollutants are also released from the facility but at much lower emission rates. Increased emissions due to the proposed facility are expected to have little effect on the soils or vegetation in the vicinity of the project area. Secondary NAAQS for these compounds were established to prevent adverse "welfare" effects such as direct damage to vegetation and harmful contamination of soils. In addition, EPA has developed certain screening concentrations below which it can reasonably be assumed that no adverse effects will occur to soils and vegetation. The vegetation sensitivity/effect screening levels were obtained from the EPA guidance document *A Screening Procedure for the Impacts of Air Pollution Sources on Plants, Soils, and Animals* (1981). Table 3-1 of the EPA Screening Procedures document specifies the screening concentrations for exposure for various vegetation species and soils depending on their sensitivity to compound concentrations. Table 7-1 presents a comparison of the MCC facility's worst-case impacts to the secondary NAAQS and EPA screening concentrations. As discussed in the following sections, facility emissions are not expected to have an adverse impact on soils or vegetation. The following provides a discussion for each of the pollutants analyzed.

7.2.1 Sulfur Dioxide Emissions

The potential for SO_2 injury to plants varies with concentrations, varies from species to species, and can even vary within species. Factors that may influence a plant's response to SO_2 exposure include soil moisture and humidity, availability of light, temperature, nutrient levels,

and plant age and size. Injury caused by SO_2 exposure can range from tissue damage from short-term (acute) exposure, to loss of yield, poor growth, and severe tissue damage from long-term (chronic) exposure.

SO_2 enters the leaves of plants through openings known as stomata. In the stomata, the gas reacts with water to form sulfuric and sulfurous acid in a film on the cell walls and affects the mesophyll cells that subsequently collapse. Cell destruction can result due to reduced photosynthesis and reduced assimilation. Plants may experience reduced growth and may be predisposed to injury from biotic and abiotic stress factors that can affect their mortality.

Evidence of adverse effects of SO_2 on conifers has been seen in the premature loss of needles. If the exposure is chronic, trees lose needles at the base of branches and down the whole tree. The effect of SO_2 exposure on hardwoods is characterized by foliage browning, death of twigs, and stem dieback. On agricultural crops, the degree of sensitivity depends on the specific crop. Unfortunately, little is currently known about the sensitivity of most crops.

The secondary NAAQS for SO_2 is 1,300 $\mu g/m^3$ (3-hour average). In a previous review of the SO_2 NAAQS completed by EPA in 1996, it was stated that vegetation damage (growth, yield, and foliar injury) due to short-term and long-term exposures to SO_2 were avoided by maintaining the current 3-hour secondary standard of 1,300 $\mu g/m^3$ (EPA 2008).

A short-term (3-hour average) screening level for SO_2 impacts to sensitive plant species has been established at 786 $\mu g/m^3$. An SO_2 screening level for species with intermediate sensitivity has been established at 2,096 $\mu g/m^3$ (3-hour average). Table 7-1 shows the maximum predicted future SO_2 concentration (existing background plus the modeled impact of all facilities in the NAAQS inventory including the MCC facility) of 788 $\mu g/m^3$ for the 3-hour average. This projected maximum SO_2 concentration listed in Table 7-1 is a conservative estimate that includes some double counting of existing sources' contribution to the current background levels. When this factor is considered, the overall maximum predicted future 3-hour SO_2 concentration should be well below EPA's screening threshold as well as the secondary NAAQS. Thus, no significant impacts on local vegetation from SO_2 emissions are expected.

Table 7-1

Comparison of MCC Impacts to EPA Screening Levels and NAAQS

Pollutant	Averaging Period	Maximum Facility Impact ($\mu g/m^3$)	Maximum Total Concentration[a] ($\mu g/m^3$)	Vegatation Screening Concentration[b] ($\mu g/m^3$)	Secondary NAAQS ($\mu g/m^3$)
NO_2	Annual	0.51	c	94	100/annual
SO_2	3-Hour	139.2	788[d]	786	1,300/3-hour
CO	1-Week	12.1[e]	f	1,000	10,000/8-hour

[a] Represents maximum future air quality levels, including background pollutant concentrations.
[b] Most stringent of EPA screening level concentrations.
[c] NO_2 impact from MCC is insignificant and therefore no further analysis of the NO_2 impact was required.
[d] The projected SO_2 concentration is overstated as it double counts some emission sources in the background inventory.
[e] The 8-hour CO concentration is conservatively compared to the 1-week screening threshold.
[f] CO impact from MCC is insignificant and therefore no further analysis of the CO impact was required.

CO = Carbon Monoxide
EPA = U.S. Environmental Protection Agency
MCC = Middletown Coke Company
NAAQS = National Ambient Air Quality Standards
NO_2 = Nitrogen Dioxide
SO_2 = Sulfur Dioxide

7.2.2 Nitrogen Oxide Emissions

The annual nitrogen dioxide (NO_2) concentration from the MCC facility is projected to be 0.51 mg/m^3. As shown in Table 6-4, this impact is below the listed threshold, which is the PSD significant impact level (SIL). Since the proposed facility's NO_2 impact is insignificant, no adverse effects on local vegetation from NO_X emissions are expected.

7.2.3 Particulate Matter Emissions

PM often comes into contact with vegetation as soil particles and other airborne particles adhere to vegetative surfaces. Wind and rain tend to remove particles from the surface of vegetation. Since ambient PM_{10} concentrations resulting from the proposed facility are low and well below the NAAQS, no adverse effects on soils or vegetation are expected.

7.2.4 Carbon Monoxide Emissions

The CO impact from the MCC facility is projected to be 48.2 mg/m^3 (1 hour) and 21.4 mg/m^3 (8 hour). As shown in Table 6-4, these concentrations are below the listed thresholds,

which are the PSD SILs. Since the proposed facility's CO impacts are insignificant, no adverse effects on local vegetation from CO emissions are expected.

7.2.5 Endangered Species Impacts

The U.S. Fish and Wildlife Service (USFWS) notes a single endangered species in Butler County (www.fws.gov/midwest/endangered/lists/ohio-cty.html) with a listing for the Indiana bat. The proposed project is located within the range of the federally endangered Indiana bat (*Myotis sodalis*), and there are records of the Indiana bat in Butler County. However, there are no records of Indiana bats on or near the project area.

According to the Ohio Department of Natural Resources-Department of Wildlife and USFWS, the historic range of the Indiana bat falls within the project area. The Indiana bat is considered an endangered species by the federal government and the State of Ohio. The Indiana bat is a migratory species, wintering in a few limestone cave hibernacula principally located in Indiana, Kentucky, and Missouri. Summer roosting and foraging areas are typically farther north in the glaciated regions of Indiana, Illinois, and Ohio. Males and gravid females may arrive in northern regions in April and remain until October. The bat typically roosts under the exfoliating (loose) bark of live or dead trees of various rough-barked tree species. The 8- to 10-in. size classes of several species of hickory (*Carya sp.*), oak (*Quercus sp.*), ash (*Fraxinus sp.*), elm (*Ulmus sp.*), eastern cottonwood (*Populus deltoides*), silver maple (*Acer saccharinum*), and sassafras (*Sassafras albidum*) are utilized in live form as roost trees. These tree species and many others may be used when dead, if there are adequately sized patches of loosely adhering bark or open cavities. The structural configuration of forest stands favored for roosting includes (1) a mixture of favored loose-barked trees with 60–80% canopy closure and (2) a low density sub-canopy (less than 30% between about 6 ft high and the base canopy).

Approximately 60 acres of forest exists on the project site. Any additional clearing will not fragment the forested area. To avoid direct impacts to Indiana bat roosting and foraging habitat, USFWS typically recommends that mechanized tree clearing be done between September 15 and April 14 or that field data be collected to substantiate that Indiana bats are not using the area for summer roosting and foraging. Consequently, MCC will limit tree removal

activities to those times outside of the summer roosting months for this species. In the event tree removal must occur between April 15 and September 15, prior to commencing this activity, MCC will conduct the necessary surveys to establish whether the Indiana bat is present or not.

Potential summer habitat of the Indiana bat is not expected to be adversely impacted as a result of facility operations. As previously discussed, the air quality impacts associated with facility operation are expected to be below those concentrations designed to protect even sensitive tree species that are potentially suitable for Indiana bat habitat.

Given the location relative to an existing long-term industrial area and the relatively minor impacts of MCC pollutants, it is unlikely that additional impacts to soils, vegetation, or endangered species would occur. This is especially evident considering the MCC facility emissions of $PM_{2.5}$, SO_2, and NO_x will be entirely offset by local emission sources. Thus, operation of the MCC facility will not increase local or regional emissions of $PM_{2.5}$, SO_2, and NO_x.

7.3 Local Visibility Analysis

Aesthetically, the new buildings and structures are low-profile and few, and therefore, local impact to aesthetic views from the project should be minimal. Steam is a common byproduct of coke and steel production. Because of the location of the MCC project, some steam produced will be visible. However, depending on atmospheric conditions, steam generally evaporates quickly, minimizing perceptibility. Also, given the existence of nearby industry, there should be little additional impairment to local visibility due to the release of steam.

The MCC project will release PM and NO_x to the atmosphere, which can cause light scattering and reduced visibility nearby. Many of the activities associated with the project and project affected sources occur at or near ground level and so will not impact visibility as a coherent plume can. Also primary $PM_{2.5}$ and NO_x emissions will be offset on an annual basis by a ratio of at least 1.0 to 1.0. All $PM_{2.5}$ reductions and most NO_x reductions will be derived from the adjacent AK Steel facility (less than 1 mile away). Thus, under the typical MCC operating

scenario, no additional $PM_{2.5}$ and NO_x emissions that could lead to visibility impairment will result.

To assess the potential effect of the increases in visibility, the VISCREEN model was run for the increased particulate emissions. Using an existing background visual range of 20 km, there is some demonstrated impact to visibility when offsetting emissions are unaccounted and while using conservative assumptions of the model and comparing the predicted levels to Class I or pristine impact thresholds.

It is more likely that, given the nature of the area in which the project is located and the travel time the plume will need to convert emissions to a form of particulate capable of scattering light and reducing visibility, the MCC project will have a small, but nearly unperceivable impact to local visibility based on a coherent plume approach.

7.4 Class I Area

The distance rings from the MCC project site to the nearest Class I areas are shown in Figure 7-3. As seen, the nearest area is Mammoth Cave, located over 230 km away. The remaining Class I areas shown are located more than 330 km distant. Federal Land Managers (FLMs) have developed screening criteria to help determine the likelihood of Class I area impacts from a source or project. The FLM screening criteria is an emission/distance ratio that, if in excess of 10, would suggest the need to assess likely impacts.

FLMs have suggested that if Q, which is the total annual emissions of PM_{10}, NO_X, SO_2, and H_2SO_4 in tons/year, is divided by D, which is the distance in km from the source to the Class I area, and the ratio is less than 10, then no further assessment will likely be needed.

From Table 6-1, Q is 1,790 tons/year and D is 236 km, for a ratio of 7.6, or less than 10. Therefore, no adverse impact on Class I areas is expected and no further assessment was completed.

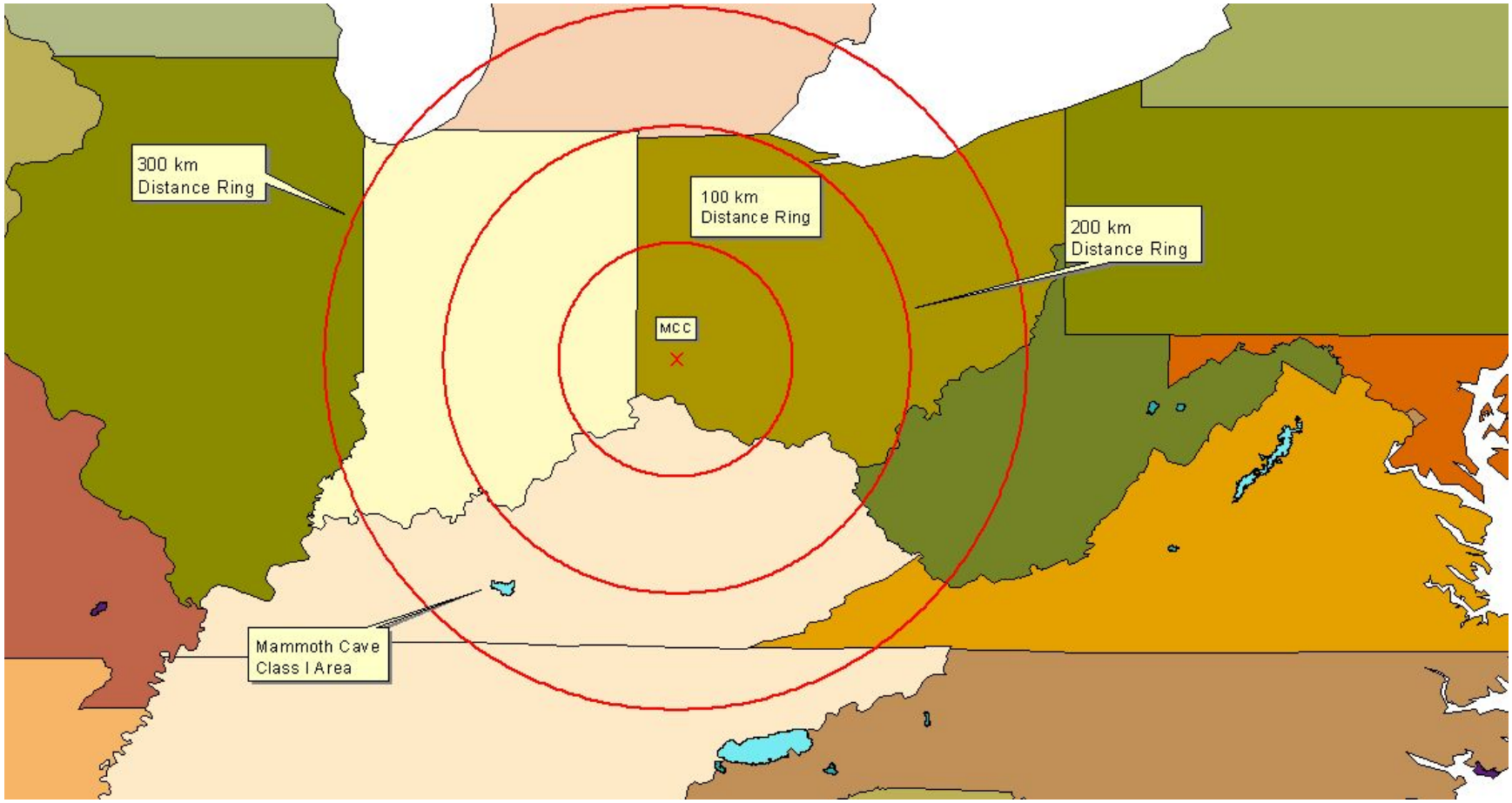

Figure 7-3. Locations of MCC and Class I Areas

This page intentionally left blank.

8.0 LOWEST ACHIEVABLE EMISSION RATE ANALYSIS

Ohio nonattainment provisions (OAC 3745-31-22) require that major new sources meet LAER for those pollutants that locate in an area that does not meet NAAQS. The facility will be located in Butler County, which is currently designated as nonattainment for ozone and $PM_{2.5}$. MCC will be a major source of $PM_{2.5}$, SO_2 (as a $PM_{2.5}$ precursor), and NO_X (as an ozone precursor). Therefore, MCC must demonstrate LAER for $PM_{2.5}$, SO_2, and NO_X.

8.1 Lowest Achievable Emission Rate

LAER is defined in OAC 3745-31-01(GGG):

"Lowest achievable emission rate" or "LAER", for any emissions unit, means the more stringent rate of emissions based on the following:

(1) The most stringent emission limitation that is contained in the implementation plan of any state for such class or category of emissions unit, unless the owner or operator of the proposed emissions unit demonstrates that such limitations are not achievable; or

(2) The most stringent emission limitation that is achieved in practice by such class or category of emissions unit. This limitation, when applied to a major modification, means LAER for the new or modified emissions units within the stationary source. In no event shall the application of this term permit a proposed new or modified emissions unit to emit any air pollutant in excess of the amount allowable under applicable new source standards of performance.

The following information sources were reviewed to identify emissions limits to evaluate for LAER:

- Regulations in states with either byproduct or nonrecovery coke plants (Alabama, Illinois, Indiana, Kentucky, Michigan, New York, Ohio, Pennsylvania, Virginia, and West Virginia),
- Federal MACT standards,
- Limitations achieved in practice at heat recovery coke making facilities, and
- EPA RBLC emission determination database.

8.2 Limitations in State and Federal Rules

Most limits in the air quality regulations for the different states were written for the byproduct coke making technology. Table 8-1 lists the regulations that have been applied or potentially could apply to the heat recovery coke making technology in Alabama, Illinois, Indiana, Kentucky, Maryland, Michigan, New York, Ohio, Pennsylvania, Virginia, and West Virginia. No charging rules are listed because they specifically apply to the byproduct technology as evidenced by their reference to charge ports, larry cars, lids, and topside areas. The heat recovery coke ovens are not charged from the top and do not have any of this equipment. Several formats are used for measuring fugitive emissions from pushing. A typical approach is to measure average opacity for four consecutive pushes considering the highest six consecutive readings in each push.

There are no New Source Performance standards for heat recovery coke making pursuant to Section 111 of the CAA. However, standards for nonrecovery coke oven batteries have been established as NESHAP under Section 112 of the CAA. These are generally referred to as MACT standards. Separate byproduct and nonrecovery MACT standards have been issued for charging and the coke ovens. The MACT standards for battery stacks are specific to the byproduct technology. There is some overlap between byproduct and nonrecovery MACT standards for pushing and quenching. The MACT standards applicable to MCC are summarized in Table 8-2.

In the background information for the proposed MACT standards, EPA listed limitations for specific facilities considered prior to establishing the federal standards (EPA 2001). Pushing emission limits for facilities with control devices ranged from 0.02 to 0.07 lb PM/ton coke. Some of these limits applied only to pushing coke out of the oven and some applied to both pushing coke into the car and travel to the quench tower. The most stringent limit was 0.04 lb/ton coke, which incorporated emissions from both the push and travel to the quench tower.

EPA also listed limitations for specific facilities for quenching. Most quenching limits were related to requirements for baffles and/or the TDS limit in the quench water. The quench water TDS limits ranged from 750 to 1,600 mg/L. As shown in Table 8-1, some standards apply

Table 8-1

State Requirements Potentially Applicable to Heat Recovery Coke Facilities

State	Charging		Pushing				Coke Oven Combustion Stack			Quenching		
	PM Limit	SO_2 limit (lb/hour)	Fugitives Opacity	Exceptions	Control Device PM Limit (lb/ton coke)	SO_2 limit (lb/hour)	Stack Opacity	PM Limit (gr/dscf)	SO_2 limit (lb/hour)	Baffles	TDS Limit (mg/L)	SO_2 limit (lb/hour)
Alabama (335-3-4-.09 Coke Ovens)			40	1 push/hr/battery			20			Yes		
Alabama Jefferson County Board of Health (6.9 Coke Ovens)			40	1 push/hr/battery			20			Yes		
Illinois (Section 212.443 Coke Plants)	0.02 gr/dscf		20		0.04		30	0.05		Yes	1,200	
Indiana (326 IAC 11-3-2 Emission Limitations for Coke Oven Batteries)					0.04 (Collect 90% of emissions)					Yes	1,500	
Indiana Lake County (326 IAC 6.8-9-3 PM_{10} Coke Battery Emission Requirements)			20		0.04					Yes	1,500	
Indiana (326 IAC 7-4.1-8 Indiana Harbor Coke Company Sulfur Dioxide Emission Limitations)		1.57				1.96			1,656 lb/hour (24-hour average waste heat vent stacks plus main stack)			1.232
Kentucky (401 KAR 61:140 Existing by-product coke manufacturing plants)			20	Except for 10% of total number of observation recorded	0.03		20			Yes	750 in make-up water	
Michigan (R336.1331 Emission of particulate matter; R336.1352 Pushing operation fugitive emissions from coke ovens; R336.1360 Visible emissions from coke oven push stacks)			25 (20% for stack)	1 push of any 8 consecutive observations	0.1			0.095 (lb particulate/lb dry gas)			1,500	
New York (214 By-product Coke Oven Batteries)			20		0.05		20	0.05		Yes	1,600	
Ohio (3745-17 Emissions of Particulate Matter)			20								1,200 (specific source limit)	
Pennsylvania (123.13 Processes; 129.15 Coke pushing operations)			20 (10% for travel)		1			0.04 < 150,000 dscfm 0.02 >300,000 dscfm				

This page intentionally left blank.

Table 8-1

(Continued)

State	Charging		Pushing				Coke Oven Combustion Stack			Quenching		
	PM Limit	SO_2 limit (lb/hour)	Fugitives Opacity	Exceptions	Control Device PM Limit (lb/ton coke)	SO_2 limit (lb/hour)	Stack Opacity	PM Limit (gr/dscf)	SO_2 limit (lb/hour)	Baffles	TDS Limit (mg/L)	SO_2 limit (lb/hour)
Allegheny County, PA (2105.21 Coke Ovens and Coke Oven Gas)			20 (20% for stack and 10% for travel)		0.04		20	0.015 (on or after Jan 1, 1978)		Yes	Water used for quenching should be equivalent or better quality established for nearest stream or river by regulations promulgated by DEP under 35 P.S. 691.1 et seq.	
Virginia (Article 9. Emission Standards for Coke Ovens)	[a]		20		*			*	SO_2 limit = 2.64 X MMBtu/hour			
West Virginia (45-7-3 Emission of Smoke and/or Particulate Matter Prohibited and Standards of Measurement)			20 (10% travel in open car)		0.04			0.06 (non-recovery plant)		Yes	800 (TDS) and 100 (total suspended solids) in make-up water	

[a]0.15 lb/hour/ton coal charged for coking, charging, and pushing.

dscf = dry standard cubic foot
PM = Particulate Matter
PM_{10} = Particulate Matter less than 10 micrometers in diameter
SO_2 = Sulfur Dioxide
TDS = Total Dissolved Solids

This page intentionally left blank.

Table 8-2

Federal Rules for Nonrecovery Coke Oven Batteries (MACT Standards)

Emissions Unit	Rule Citation	Rule Summary	Activity
Coke Oven Doors	40 CFR 63.303(b)(1)(ii)	Demonstrate negative pressure	Monitor and record once per day the pressure of each oven or in a battery common tunnel
	40 CFR 63.303(c)(1)	Observe each door for visible emissions	Record oven number from which visible emissions occur
	40 CFR 63.303(c)(2)	Corrective actions for doors with visible emissions	Stop visible emissions within 15 min
Charging	40 CFR 63.303(b)(2)	Use emission control system for capture and collection of charging emissions	Install and operate system during oven charging
	40 CFR 63.303(d)(1)	Visible emissions from charging must be ≤20%	Observe five consecutive charges/week for each charging capture system
	40 CFR 63.303(d)(2)	PM emissions from control device must be ≤0.0081 lb/dry ton coal	Install and operate device and perform work practices during charging
	40 CFR 63.303(d)(3)	Visible emissions from control device stack must be ≤10%	Operator will observe stack daily for any visible emissions. If any visible emissions are seen, perform visible emissions measurement using EPA Method 9
	40 CFR 63.303(d)(4)	Operating procedures during charging	Operating procedures must address uptake damper operation during charging
Pushing	40 CFR 63.7290(a)(4)	PM limited to 0.04 lb/ton coke from mobile control device that captures emissions during travel	Install and operate device and perform work practices during pushing
	40 CFR 63.7290(b)(3)	Establish minimum volumetric flow rate	Establish minimum volumetric flow rate during performance test
	40 CFR 63.7290(b)(3)(i)	Monitor pushing fan amps	Monitor multicyclone fan amps as a surrogate for flow rate. Daily average must be above minimum
	40 CFR 63.7290(b)(4)	Monitor multicyclone pressure drop	Monitor multicyclone pressure drop. Describe in monitoring plan. Daily average must be in range
	40 CFR 63.7293(a)	Visually inspect ovens before pushing	Do not push an oven until operator verifies by looking into the oven that coking is complete
Quenching	40 CFR 63.7295(b)(1)	Quench tower baffle construction requirement	No more than 5% of the quench tower may be open to the sky
	40 CFR 63.7295(b)(2)	Quench tower baffle washing requirement	Baffles must be washed each day unless prohibited by cold temperature
	40 CFR 63.7295(a)(1)(i)	Quench water quality	Verify that the quench water TDS is ≤1,100 mg/L by sampling
	40 CFR 63.7352	Acceptable make-up water	Process water is not acceptable unless it has been treated. Water from a river, lake, or stream; storm water runoff; or water used for non-contact cooling or in water seals is acceptable

CFR = Code of Federal Regulations
EPA = U.S. Environmental Protection Agency
MACT = Maximum Achievable Control Technology
PM = Particulate Matter
TDS = Total Dissolved Solids

to make-up water and some to quench water. EPA set the TDS MACT standard at 1,100 mg/L for the quench water applied to the coke.

8.3 Limitations Achieved in Practice

There are three heat recovery coke making facilities in the United States: Jewell Coke Company in Vansant, Virginia (Title V Operating Permit SWRO 10200, October 2, 2007); Indiana Harbor Coke Company in East Chicago, Indiana (Operation Permit T089-11311-00382, September 22, 2006); and HNCC in Franklin Furnace, Ohio (PTI 07-00511, January 15, 2008). Gateway Energy and Coke Company (GECC) is currently under construction in Granite City, Illinois (Construction Permit 119040ATN, March 13, 2008). GECC is not in operation but the permit was issued under similar circumstances. The facility was considered a major modification of PM_{10} (as a surrogate for $PM_{2.5}$) in a $PM_{2.5}$ nonattainment area and LAER was required. The PM limits for these facilities are summarized in Table 8-3. The SO_2 limits are summarized in Table 8-4. The NO_X limits are summarized in Table 8-5.

EPA's RBLC database was searched in March 2009 to identify any emission units at coke making facilities that had been designated LAER, BACT, or RACT for PM/PM_{10} (no limitations are listed for $PM_{2.5}$), SO_2, and NO_X. Facilities with BACT units for PM/PM_{10} are listed in Table 5-1. There are two heat recovery facilities in the database. One of the heat recovery facilities is SunCoke's HNCC in Franklin Furnace, Ohio. The other heat recovery facility is FDS Coke. FDS Coke has not been constructed. Consequently, the technology and limits for the FDS facility are not demonstrated and do not represent limitations achieved in practice.

Table 8-6 lists the PM results for the LAER search. All the facilities in Table 8-6 are byproduct plants, and many limitations are specific to the byproduct technology (e.g., lids, off-take piping, underfire emissions). Table 8-7 lists the SO_2 results for the LAER search, which shows only byproduct facilities. There were no facilities with NO_X results for LAER.

Table 8-3

PM/PM_{10} Limitations Achieved in Practice at Heat Recovery Coke Making Facilities

Emissions Unit	Jewell Coke Company (Vansant, Virginia)	Indiana Harbor Coke Company (East Chicago, Indiana)	Haverhill North Coke Company (Haverhill, Ohio)	Gateway Energy and Coke Company (Granite City, Illinois)
Coke Oven Doors	Same as MACT	Same as MACT	Same as MACT	Same as MACT
Coal Charging	Same as MACT	MACT 0.03 gr/dscf	Same as MACT	0.016 lb/dry ton coal (filterable and condensable) - LAER; filterable fraction 0.0081 lb/dry ton coal (same as MACT) 0.02 gr/dscf
Heat Recovery Coking - Main Stack	No main stack at Jewell	Filterable plus condensable PM limit - 0.03 gr/dscf (weighted average of main and waste heat stacks)	0.008 gr/dscf 10% opacity	0.008 gr/dscf - LAER; agreed to 0.005 gr/dscf in final permit
Heat Recovery Coking - Individual Waste Heat Stacks	0.92 lb/hour/oven	Filterable plus condensable PM limit - 0.03 gr/dscf (weighted average of main and waste heat stacks)	Equivalent to 0.049 gr/dscf	0.08 gr/dscf (filterable and condensable) - LAER; filterable fraction 0.049 gr/dscf
Coke Pushing	Same as MACT	PM must be ≤0.04 lb/ton coke Fugitive VEs must be ≤20% (3-minute average)	Same as MACT Fugitive VEs must be ≤20% (3-minute average)	0.08 lb/ton coke (filterable and condensable) - LAER; filterable fraction 0.04 lb/ton coke
Coke Quenching	Same as MACT	Same as MACT	MACT 0.05 lb PM_{10}/wet ton coal (based on AP-42 emission factor)	MACT 0.044 lb PM_{10}/wet ton coal - LAER (based on AP-42 emission factor)
Coke Crushing/ Screening	20% opacity	PM limit - 0.03 gr/dscf	PM limit - 0.008 gr/dscf	0.008 gr/dscf - LAER
General - production	45 wet tons coal/oven	5,589.0 dry tons coal/day (equivalent to average 41.7 dry tons coal/oven or 45.3 wet tons coal/oven at 8% moist)	2,400 wet tons coal/day (equivalent to average 48 wet tons coal/oven)	1,100,000 wet tons coal/year (equivalent to average 50 wet tons coal/oven)

Table 8-3

(Continued)

Emissions Unit	Jewell Coke Company (Vansant, Virginia)	Indiana Harbor Coke Company (East Chicago, Indiana)	Haverhill North Coke Company (Haverhill, Ohio)	Gateway Energy and Coke Company (Granite City, Illinois)
General - use of waste heat stacks	No limit - >90% of flue gases vented through waste heat stacks. No HRSGs or SD/BH	Daily limit - 19% of flue gas through individual waste heat stacks Annual limit - 14% of flue gas through individual waste heat stacks SD/BH maintenance not addressed in permit - handled under Illinois emergency maintenance provisions	HRSG Maintenance – one individual waste heat stack open at a time Annual limit - each waste heat stack open for ≤8 days/rolling 12 months SD/BH maintenance not addressed in permit - handled under Ohio emergency maintenance provisions	HRSG Maintenance - one individual waste heat stack open at a time Annual limit - each waste heat stack open for ≤8 days/rolling 12 months SD/BH maintenance - all six waste heat stacks open simultaneously ≤5 days

Notes:
Filterable PM unless otherwise indicated.
Heat recovery is same coking technology as nonrecovery.
Gateway is under construction - limits shown for comparison.

dscf = dry standard cubic foot
HRSG = Heat Recovery Steam Generator
LAER = Lowest Achievable Emission Rate
MACT = Maximum Achievable Control Technology
PM = Particulate Matter
PM_{10} = Particulate Matter less than 10 micrometers in diameter
SD/BH = Spray Dryer/Baghouse
VE = Visible Emissions

Table 8-4

SO_2 Limitations Achieved in Practice at Heat Recovery Coke Making Facilities

Emissions Unit	Jewell Coke Company (Vansant, Virginia)	Indiana Harbor Coke Company (East Chicago, Indiana)	Haverhill North Coke Company (Haverhill, Ohio)	Gateway Energy and Coke Company (Granite City, Illinois)
Coke Oven Doors	No limit	No limit	No limit	No limit
Coal Charging	No limit	1.57 lb/hour (estimate - no data)	0.0003 lb SO_2/wet ton coal (Jewell test data)	0.0003 lb SO_2/wet ton coal (Jewell test data)
Heat Recovery Coking - Main Stack	No main stack at Jewell	1,656 lb/hour from main plus waste heat stacks (24-hour average)	Design for 92% removal efficiency 1.6 lb SO_2/wet ton coal	Design for 90% removal efficiency
Heat Recovery Coking - Individual Waste Heat Stacks	10 lb/hour/oven	1,656 lb/hour from main plus waste heat stacks (24-hour average)	Equivalent to 20 lb SO_2/wet ton coal	Equivalent to 18.2 lb SO_2/wet ton coal
Coke Pushing	No limit	1.96 lb/hour (estimate - no data)	0.05 lb SO_2/ton coal (1995 AWMA Conference Paper)	0.098 lb SO_2/wet ton coal (current AP-42 emission factor)
Coke Quenching	No limit	1.322 lb/hour (estimate - no data)	No limit	No limit
General - production	45 wet tons coal/oven	6,067.2 dry tons coal/day (equivalent to average 41.7 dry tons coal/oven or 45.3 wet tons coal/oven at 8% moist)	2,400 wet tons coal/day (equivalent to average 48 wet tons coal/oven)	1,100,000 wet tons coal/year (equivalent to average 50 wet tons coal/oven)
General - use of waste heat stacks	No limit - >90% of flue gases vented through waste heat stacks. No HRSGs or SD/BH	Daily limit - 19% of flue gas through individual waste heat stacks Annual limit - 14% of flue gas through individual waste heat stacks SD/BH maintenance not addressed in permit - handled under Illinois emergency maintenance provisions	HRSG Maintenance - one individual waste heat stack open at a time Annual limit - each waste heat stack open for ≤8 days/rolling 12 months SD/BH maintenance not addressed in permit - handled under Ohio emergency maintenance provisions	HRSG Maintenance - one individual waste heat stack open at a time Annual limit - each waste heat stack open for ≤8 days/rolling 12 months SD/BH maintenance - all six waste heat stacks open simultaneously ≤5 days
General - maximum coal sulfur	0.88%	No limit	1.30%	No limit

Notes:
Heat recovery is same coking technology as nonrecovery.
Gateway is under construction - limits shown for comparison.

HRSG = Heat Recovery Steam Generator
SO_2 = Sulfur Dioxide
SD/BH = Spray Dryer/Baghouse

Table 8-5

NO_x Limitations Achieved in Practice at Heat Recovery Coke Making Facilities

Emissions Unit	Jewell Coke Company (Vansant, Virginia)	Indiana Harbor Coke Company (East Chicago, Indiana)	Haverhill North Coke Company (Haverhill, Ohio)	Gateway Energy and Coke Company (Granite City, Illinois)
Coke Oven Doors	No limit	No limit	No limit	No limit
Coal Charging	No limit	No limit	No limit	No limit
Heat Recovery Coking - Main Stack	No main stack at Jewell	Equivalent to 1.31 lb NO_X/dry ton coal	1.0 lb NO_X/wet ton coal	Equivalent to 1.0 lb NO_X/wet ton coal
Heat Recovery Coking - Individual Waste Heat Stacks	0.94 lb/hour/oven	Equivalent to 1.31 lb NO_X/dry ton coal	1.0 lb NO_X/wet ton coal	Equivalent to 1.0 lb NO_X/wet ton coal
Coke Pushing	No limit	No limit	0.016 lb NO_X/ton coal (Ohio EPA emission factor)	0.019 lb NO_X/wet ton coal (current AP-42 emission factor)
Coke Quenching	No limit	No limit	No limit	No limit
General - production	45 wet tons coal/oven	6,067.2 dry tons coal/day (equivalent to average 41.7 dry tons coal/oven or 45.3 wet tons coal/oven at 8% moist)	2,400 wet tons coal/day (equivalent to average 48 wet tons coal/oven)	1,100,000 wet tons coal/year (equivalent to average 50 wet tons coal/oven)
General - use of waste heat stacks	No limit - >90% of flue gases vented through waste heat stacks. No HRSGs or SD/BH	Daily limit - 19% of flue gas through individual waste heat stacks Annual limit - 14% of flue gas through individual waste heat stacks SD/BH maintenance not addressed in permit - handled under Illinois emergency maintenance provisions	HRSG Maintenance - one individual waste heat stack open at a time Annual limit - each waste heat stack open for ≤8 days/rolling 12 months SD/BH maintenance not addressed in permit - handled under Ohio emergency maintenance provisions	HRSG Maintenance - one individual waste heat stack open at a time Annual limit - each waste heat stack open for ≤8 days/rolling 12 months SD/BH maintenance - all six waste heat stacks open simultaneously ≤5 days

Notes:
Heat recovery is same coking technology as nonrecovery.
Gateway is under construction - limits shown for comparison.

EPA = Environmental Protection Agency
HRSG = Heat Recovery Steam Generator
NO_X = Nitrogen Oxides
SD/BH = Spray Dryer/Baghouse

Table 8-6

RBLC Database Search Results for LAER PM Limits at Coke Facilities

RBLC ID	Facility Name	Last Updated	Process Name	Control Description	Emission Limit	Efficiency
IL-0015	Granite City Steel (byproduct coke plant)	1/28/2002	Oven, coke pushing	Enclosed quench car/scrub system, work practice: inventory of parts, maintenance procedures	0.04 lb/ton coke	NA
			Battery stack	NA	0.015 gr/dscf	NA
			Lids	Vent from no more than 1% of lids	1% of lids	NA
			Doors	Design and parts inventory, vent from no more than 5% of ovens	5% of ovens	NA
			Charging	Fuel spec: 55 s total for five consecutive charges	No standard limit	NA
			Off-take piping	Vent from no more than 5% of piping	4% of piping	NA
IN-0012	Inland Steel Co. (byproduct coke plant)	12/18/2001	Precarbonization emissions	NA	0.031 gr/dscf	NA
			Underfire emissions	NA	0.1 lb/MMBtu	NA
			Pushing operation	NA	0.02 lb/ton coke	NA
MD-0006	Bethlehem Steel Corp. (byproduct coke plant)	1/28/2002	Charging	NA	0.0005 lb/ton	NA
			Doors	NA	0.05 lb/ton	NA
			Pushing	NA	0.03 lb/ton 0.03 gr/dscf	NA
			Quenching	NA	0.309 lb/ton	NA
			Stand pipes	NA	0.3 lb/ton	NA
			Underfire	NA	0.12 lb/ton 0.015 gr/dscf	NA

dscf = dry standard cubic foot
LAER = Lowest Achievable Emission Rate
NA = Not Applicable
PM = Particulate Matter
RBLC = RACT/BACT/LAER Clearinghouse

Table 8-7

RBLC Database Search Results for LAER SO_2 Limits at Coke Facilities

RBLC ID	Facility Name	Last Updated	Process Name	Control Description	Emission Limit	Efficiency
IN-0012	Inland Steel Co. (byproduct coke plant)	12/18/2001	Underfire emissions	NA	No standard limit	NA
			Coke oven gas desulfurization	NA	0.35 gr/100 cf H_2S	NA
MD-0006	Bethlehem Steel Corp. (byproduct coke plant)	1/28/2002	Oven, 80	Fuel spec: sulfur in fuel limit to 1.0% by weight	No standard limit	NA

H_2S = Hydrogen Sulfide
LAER = Lowest Achievable Emission Rate
NA = Not Applicable
RBLC = RACT/BACT/LAER Clearinghouse
SO_2 = Sulfur Dioxide

8.4 Air Pollution Controls

Air pollution controls are discussed in the BACT analyses for PM/PM_{10}, SO_2, and NO_X in Section 5.0. The stack emissions are assumed to be $PM_{2.5}$ since there is no reliable information on the distribution of $PM/PM_{10}/PM_{2.5}$. Only approximately 3% of the $PM_{2.5}$ emissions are expected to be fugitive. The control technologies and work practices indentified as BACT also apply to the LAER analysis. There are no "LAER technologies" associated with the heat recovery coking technology.

8.5 LAER Demonstration

MCC must meet LAER for the $PM_{2.5}$, SO_2, and NO_X emission units discussed in this application. LAER was selected from limits in state and federal rules and limits achieved in practice. Some of the limitations are not currently achievable. The only LAER analysis found associated with the heat recovery coke making technology was by Illinois EPA for GECC, which is under construction in Granite City, Illinois.

8.5.1 LAER for $PM_{2.5}$

The limits proposed for $PM_{2.5}$ are summarized in Table 8-8. These are the most stringent with the following exceptions:

- The proposed annual limit for HRSG maintenance is 10 days. The HNCC facility has an annual limit of 8 days based on one annual outage. However, experience at HNCC has shown that two 5-day outages each year are required to adequately maintain the HRSGs. As discussed in Section 2.0, this is expected to (1) decrease the likelihood of HRSG malfunctions and (2) reduce the opportunity for corrosion in the SD/BH, and ductwork. Decreased corrosion in the SD/BH system reduces the likelihood of having to take the SD/BH system offline for extensive repairs

This page intentionally left blank.

Table 8-8

Comparison of PM Emission Limitations Applied to Heat Recovery Coke Ovens

						Work Practice		Filterable PM/PM_{10} Limits[b]	
Emissions Unit	**Proposed Control Device**	**MACT Standard for Nonrecovery[a] Coke Ovens**	**Achieved in Practice**	**More Stringent State Rule**	**More Stringent LAER/BACT Determination**	**Proposed Limit**	**Proposed Limit Most Stringent?**	**Proposed Limit**	**Proposed Limit Most Stringent?**
Coke Oven Doors	Negative pressure design	Demonstrate negative pressure daily in each common tunnel	Same as MACT	None	None	Same as MACT	Yes	NA	NA
		Observe each door for VEs - stop within 15 minutes	Same as MACT	None	None	Same as MACT	Yes	NA	NA
Coal Charging	Traveling hood with fabric filter	Fugitive VEs must be ≤20% (observe 5 consecutive charges/ week/system)	Same as MACT	None	None	NA	NA	Same as MACT	Yes
		Filterable PM must be ≤0.0081 lb/dry ton coal	Same as MACT	None	None	NA	NA	Same as MACT	Yes
		Stack VEs must be ≤10%	Same as MACT	None	None	NA	NA	Same as MACT	Yes
Heat Recovery Coking - Main Stack	Fabric filter, common tunnel afterburner, and lime spray dryer	None	Filterable PM limit - 0.008 gr/dscf (Haverhill)	None	None	None	None	Filterable PM limit - 0.005 gr/dscf	Yes
Heat Recovery Coking - Emissions during HRSG maintenance	Common tunnel afterburner	None	Daily limit - one individual waste heat stack open; Annual limit - each waste heat stack open for ≤8 days	None	None	One individual waste heat stack open at a time; Annual limit - each waste heat stack open for ≤10 days	No but 10 days required by experience at Haverhill	0.049 gr/dscf	Yes
Heat Recovery Coking - Emissions during SD/BH maintenance	Common tunnel afterburner	None	SD/BH bypassed for maintenance to prevent malfunction under state provisions	None	None	SD/BH bypassed for ≤5 days	Same term is included in permit to construct Gateway Energy and Coke Company in Granite City $PM_{2.5}$ Nonattainment area	0.049 gr/dscf	Yes
Coke Pushing	Hot push flat car and traveling hood with multicyclone	PM must be ≤0.04 lb/ton coke from mobile device that captures emissions during travel	Same as MACT	None - some appear more stringent but do not consider emissions during travel	None - some appear more stringent but do not consider emissions during travel	NA	NA	Filterable PM must be ≤0.04 lb/ton coke	Yes
		Inspect each oven before pushing	Same as MACT	None	None	Same as MACT	Yes	NA	NA
			Fugitive VEs must be ≤20% (3-minute average)	None	None	NA	NA	Same as achieved in practice	Yes
Coke Quenching	Baffles, water with controlled TDS	No more than 5% of the tower may be open to the sky	Same as MACT	None	None	Same as MACT	Yes	NA	NA
		Wash baffles daily	Same as MACT	None	None	Same as MACT	Yes	NA	NA
		TDS ≤1,100 mg/L in quench water	Same as MACT	None	None	Same as MACT	Yes	NA	NA
			0.05 lb PM_{10}/wet ton coal	None	None	NA	NA	0.044 lb PM_{10}/wet ton coal	Yes

This page intentionally left blank.

Table 8-8

(Continued)

						Work Practice		Filterable PM/PM_{10} Limits[b]	
Emissions Unit	**Proposed Control Device**	**MACT Standard for Nonrecovery[a] Coke Ovens**	**Achieved in Practice**	**More Stringent State Rule**	**More Stringent LAER/BACT Determination**	**Proposed Limit**	**Proposed Limit Most Stringent?**	**Proposed Limit**	**Proposed Limit Most Stringent?**
Coke Crushing/Screening	Fabric filter	None	0.008 gr/dscf	None	None	NA	NA	0.008 gr/dscf	Yes

[a]Same as heat recovery.
[b]No limits found for $PM_{2.5}$.

BACT = Best Available Control Technology
dscf = dry standard cubic foot
HRSG = Heat Recovery Steam Generator
LAER = Lowest Achievable Emission Rate
MACT = Maximum Achievable Control Technology
NA = Not Applicable
PM = Particulate Matter
$PM_{2.5}$ = Particulate Matter less than 2.5 micrometers in diameter
PM_{10} = Particulate Matter less than 10 micrometers in diameter
SD/BH = Spray Dryer/Baghouse
TDS = Total Dissolved Solids
VE = Visible Emissions

This page intentionally left blank.

- Five days for maintenance of the SD/BH system is proposed. Before HNCC was constructed, it was envisioned that all SD/BH maintenance could be performed with the system online. However, some nonroutine activities, such as the need to inspect the inside of the spray dryer and the internal components in the baghouse, cannot be performed safely without temporarily shutting down the SD/BH system. This is allowed in the GECC permit but is performed at other facilities by (1) requesting permission to bypass the SD/BH system to prevent a malfunction or (2) shutting down the SD/BH system to address a malfunction. This annual maintenance is crucial to long-term viability of the air pollution control equipment. If adequate preventive maintenance is not performed, the equipment will fail, either gradually or catastrophically.

In addition, the filter material used for the bags in the main baghouse will be selected for improved control of filterable $PM_{2.5}$. For example, this will include a membrane material, microfiber material, microfiber capped composite material, or other similar filter material that has enhanced performance for collection of fine particulate as compared to conventional woven or felt filter material. The filter material will be selected from those that have been demonstrated to provide greater than 99.99% reduction in emissions of filterable $PM_{2.5}$ as determined by the "Generic Verification Protocol for Baghouse Filtration Products," as used by EPA's Environmental Technology Verification program for evaluation of filter materials or ASTM Standard D 6830-02, Characterizing the Pressure Drop and Filtration Performance of Cleanable Filter Media, or other equivalent protocol.

8.5.2 LAER for SO_2

MCC's emissions of SO_2 will be affected by the both the short- and long-term availability and quality of metallurgical coal after the facility begins operation. Unfortunately, the availability and quality of metallurgical coals has been subject to a number of trends and events that make the prediction and control of coal sulfur content very challenging, not just in the long term but also the short term.

First, the supply of metallurgical coal in the United States has exhibited significant volatility in the last few years. Availability of coal has been impacted by several force majeure events at major U.S. metallurgical coal mines. During these events, the limited availability of alternative supplies has generally led to higher sulfur contents for replacement coals. For

example, numerous metallurgical grade coals available in the market have sulfur contents in the range of 1.3–1.5% and even up to 2.0%.

Second, the coal quality of existing U.S. metallurgical mines, especially with regard to sulfur, has exhibited a deteriorating trend as reserves deplete. Because of this overall market drift toward higher sulfur coal, any permit limitations regarding sulfur should be reflective of this reality.

Figure 8-1 illustrates the increase and variability in coal sulfur at HNCC over the last 3 years.

Another parameter that affects SO_2 emissions is the fraction of sulfur that reports to the flue gas compared to the amount that stays in the coke. Information available when HNCC was being permitted indicated that 42–43% of the sulfur went to the flue gas (57–58% stayed in the coke). While this level is generally achievable over the course of a year, experience at HNCC has shown that up to 50% of the sulfur can go to the flue gas during shorter periods such as a day or a week. The impact of less sulfur staying with the coke is higher SO_2 levels at the inlet of the spray dryer and higher SO_2 emissions during maintenance activities.

The impact of these two variables (coal sulfur content and the percentage of SO_2 to the flue gas) on the controlled emission factor for the main stack is illustrated in Figure 8-2. As the figure demonstrates, these variables can have significant affects on both controlled and uncontrolled SO_2 emissions, especially over short-term periods.

Despite these challenges, MCC has proposed SO_2 limits that meet or exceed LAER for controlled emissions. Excluding planned SD/BH and HRSG maintenance periods, MCC will meet an annual limit of 700.8 tons/year, which is equivalent to an average of 160 lb SO_2/hour, or 1.54 lb/ton coal. This limit reflects a 92% removal efficiency for the SD/BH system and is comparable to the annual SO_2 limit and removal efficiency at each group of 100 ovens at HNCC. The annual SO_2 limit of 1.54 lb/ton coal at MCC for the main stack is more stringent than the 1.60 lb/ton coal at HNCC and represents LAER. In addition, MCC has proposed a 24-hour

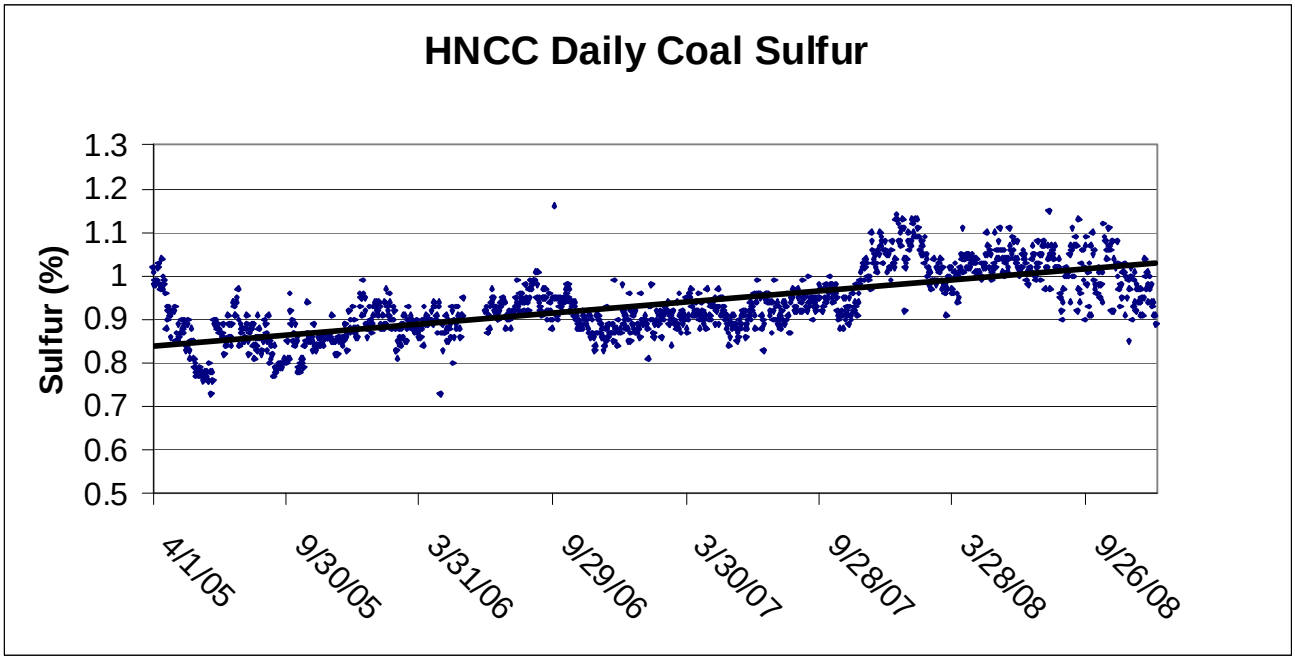

Figure 8-1. Daily Coal Sulfur Measurements at HNCC

This page intentionally left blank.

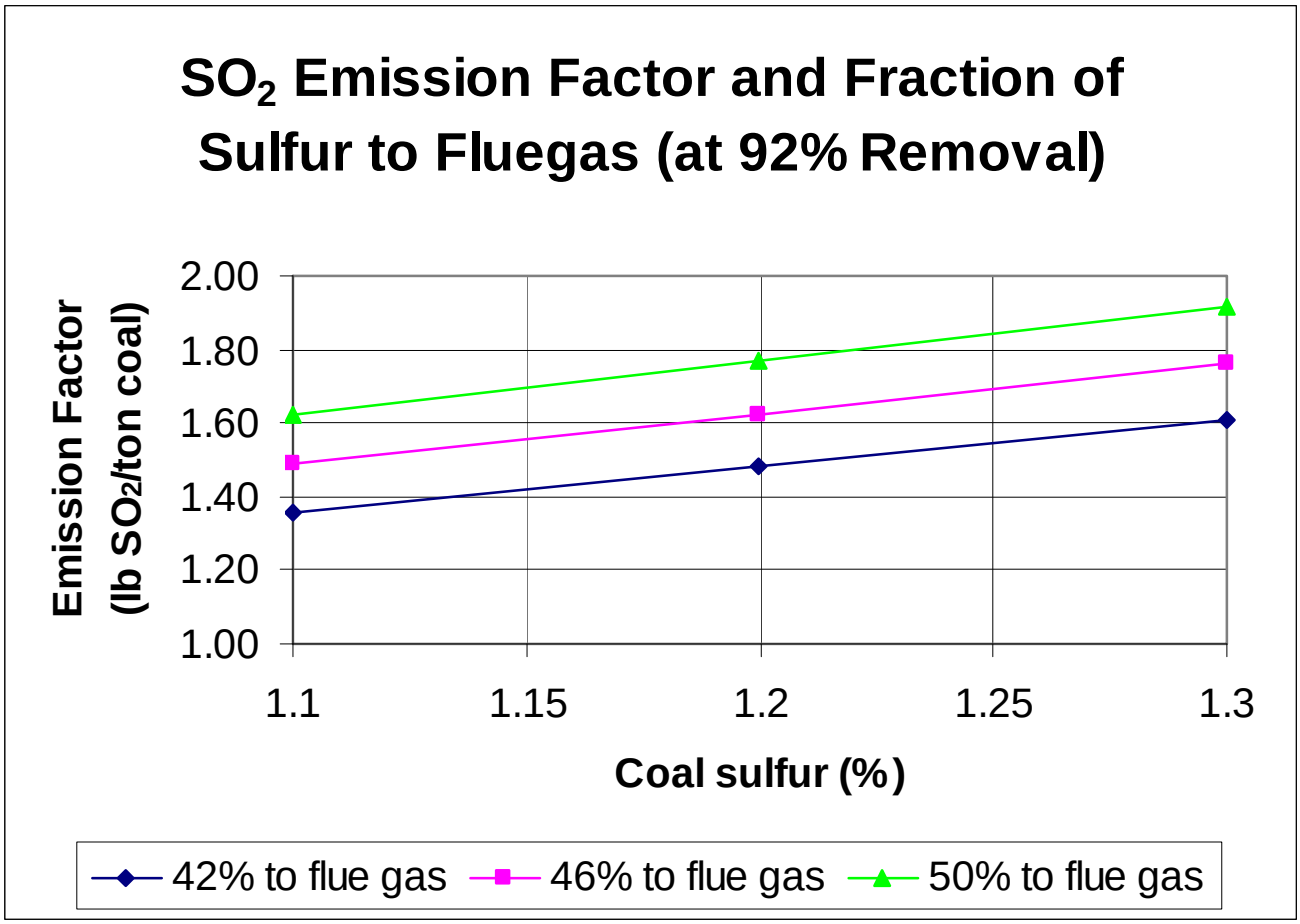

Figure 8-2. SO_2 Emission Factor and Fraction of Sulfur to Flue Gas

This page intentionally left blank.

emission limit of 192 lb SO_2/hour, which also represents a 92% removal efficiency, reflecting the short-term variability of coal sulfur content and the fraction of sulfur reporting to the flue gas.

The other limits proposed for SO_2 are summarized in Table 8-9. These are the most stringent with the following exceptions:

- The expected maximum coal sulfur content at MCC is 1.3%. The Jewell facility has a limit of 0.88%. However, Jewell owns and is co-located with metallurgical coal mines that produce a coal blend with this very low sulfur content. As previously discussed, the proposed maximum coal sulfur at MCC is based on operations experience at SunCoke facilities over the past 3 years and is reflective of the short-term variability and long-term quality degradation observed in metallurgical coal markets.
- The expected vent stack emission rate during HRSG maintenance is 23.92 lb/wet coal ton. The HNCC facility has a limit of 20 lb/wet coal ton. However, since the permitting of the HNCC plants, additional operational data, as previously discussed, has demonstrated the substantial short-term variability in the fraction of sulfur that goes to flue gas. Consequently, the emission factors for MCC represent performance based on current experience at HNCC and that is expected to continue.
- There are limited data on SO_2 emissions from pushing. The proposed emission factor is the current AP-42 value. Other limits have been applied based on obsolete emission factors.

8.5.3 LAER for NO_X

The limits proposed for NO_X are summarized in Table 8-10. These are the most stringent with the following exception:

- There are limited data on NO_X emissions from pushing. The proposed emission factor is the current AP-42 value. Other limits have been applied based on obsolete emission factors.

This page intentionally left blank.

Table 8-9

Comparison of SO_2 Emission Limitations Applied to Heat Recovery Coke Ovens

						Work Practice		SO_2 Limits	
Emissions Unit	**Proposed Control Device**	**MACT Standard for Nonrecovery[a] Coke Ovens**	**Achieved in Practice**	**More Stringent State Rule**	**More Stringent LAER/BACT Determination**	**Proposed Limit**	**Proposed Limit Most Stringent?**	**Proposed Limit**	**Proposed Limit Most Stringent?**
Coke Oven Doors	Negative pressure design	Demonstrate negative pressure daily in each common tunnel	Same as MACT	None	None	Same as MACT	Yes	NA	NA
		Observe each door for VEs - stop within 15 minutes	Same as MACT	None	None	Same as MACT	Yes	NA	NA
Coal Charging	Traveling hood with fabric filter	None	0.0003 lb/wet ton coal	None	None	NA	NA	0.0003 lb/wet ton coal	Yes
Heat Recovery Coking - Main Stack	Fabric filter, common tunnel afterburner, and lime spray dryer	None	Design for 92% removal efficiency	None	None	None	None	Design for 92% removal efficiency	Yes
			1.6 lb SO_2/wet ton coal	None	None	None	None	Design for 1.54 lb/wet ton coal (annual average)	Yes
Heat Recovery Coking - Emissions during HRSG maintenance	None	None	20 lb/wet ton coal	None	None	None	None	23.92 lb/wet ton coal	No - Higher emission factor due to short-term variability and long-term degradation of metallurgical coal supply (see text)
Heat Recovery Coking - Emissions during SD/BH maintenance	None	None	SD/BH bypassed for maintenance to prevent malfunction under state provisions	None	None	SD/BH bypassed for ≤5 days	Same term is included in permit to construct Gateway Energy and Coke Company in Granite City $PM_{2.5}$ Nonattainment area	Reduce emissions by 28% by minimizing coal production and coal sulfur	This activity has been performed but not previously permitted
Coke Pushing	Hot push flat car and traveling hood with multicyclone	None	Limited data - estimated or based on emission factor	None	Yes - based on old emission factor	NA	NA	0.098 lb/wet ton coal (current AP-42 emission factor)	No - previous limit based on old emission factor
Coke Quenching	Baffles, water with controlled TDS	None	Limited data	None	None	NA	NA	None - not listed in AP-42	Yes
General - maximum coal sulfur	None	None	0.88%	None	None	NA	NA	1.30%	No – proposed limit based on short-term variability and long-term degradation of metallurgical coal supply (see text)

[a]Same as heat recovery.

BACT = Best Available Control Technology
HRSG = Heat Recovery Steam Generator
LAER = Lowest Achievable Emission Rate
MACT = Maximum Achievable Control Technology
NA = Not Applicable
$PM_{2.5}$ = Particulate Matter less than 2.5 micrometers in diameter
SD/BH = Spray Dryer/Baghouse
SO_2 = Sulfur Dioxide
TDS = Total Dissolved Solids
VE = Visible Emissions

This page intentionally left blank.

Table 8-10

Comparison of NO_x Emission Limitations Applied to Heat Recovery Coke Ovens

						Work Practice		NO_X Limits	
Emissions Unit	**Proposed Control Device**	**MACT Standard for Nonrecovery[a] Coke Ovens**	**Achieved in Practice**	**More Stringent State Rule**	**More Stringent LAER/BACT Determination**	**Proposed Limit**	**Proposed Limit Most Stringent?**	**Proposed Limit**	**Proposed Limit Most Stringent?**
Coke Oven Doors	Negative pressure design	Demonstrate negative pressure daily in each common tunnel	Same as MACT	None	None	Same as MACT	Yes	NA	NA
		Observe each door for VEs - stop within 15 minutes	Same as MACT	None	None	Same as MACT	Yes	NA	NA
Coal Charging	Traveling hood with fabric filter	None	No limit	None	None	NA	NA	No limit	Yes
Heat Recovery Coking - Main Stack	Fabric filter, common tunnel afterburner, staged combustion, and lime spray dryer	None	1.0 lb/wet ton coke	None	None	None	None	1.0 lb/wet ton coke	Yes
Heat Recovery Coking - Emissions during HRSG maintenance	Staged combustion	None	1.0 lb/wet ton coke	None	None	None	None	1.0 lb/wet ton coke	Yes
Heat Recovery Coking - Emissions during SD/BH maintenance	Staged combustion	None	1.0 lb/wet ton coke	None	None	None	None	1.0 lb/wet ton coke	Yes
Coke Pushing	Hot push flat car and traveling hood with multicyclone	None	Limited data - estimated or based on emission factor	None	Yes - old emission factor	NA	NA	0.019 lb/wet ton coal (current AP-42 emission factor)	No - previous permit with old emission factor
Coke Quenching	Baffles, water controlled with TDS	None	No limit	None	None	NA	NA	No limit	Yes

[a]Same as heat recovery.

BACT = Best Available Control Technology
HRSG = Heat Recovery Steam Generator
LAER = Lowest Achievable Emission Rate
MACT = Maximum Achievable Control Technology
NA = Not Applicable
NO_X = Nitrogen Oxides
SD/BH = Spray Dryer/Baghouse
TDS = Total Dissolved Solids
VE = Visible Emissions

This page intentionally left blank.

9.0 REFERENCES

Air and Waste Management Association 2000. *Air Pollution Engineering Manual*, Second Ed., Wayne T. Davis Editor, John Wiley & Sons, Inc.

DOE 2008. "An Update on DOE/NETL's Mercury Control Technology Field Testing Program," U.S. Department of Energy, National Energy Technology Laboratory, July.

EPA 1981. *A Screening Procedure for the Impacts of Air Pollution Sources on Plants, Soils, and Animals*, EPA 450/2/81-078, December.

EPA 1990. Draft *New Source Review Workshop Manual*.

EPA 1993. *Guidance for Estimating Capital and Annual Costs of Air Pollution Control Systems,* Ohio EPA Engineering Guide 46, March.

EPA 2001. *National Emission Standards for Hazardous Air Pollutants (NESHAP) for Coke Ovens: Pushing, Quenching, and Battery Stacks – Background Information for Proposed Standards,* Final Report, EPA-453/R-01-006, February.

EPA 2002. *EPA Air Pollution Control Cost Manual,* Sixth Edition, EPA/452/B-02-001, January.

EPA 2008. "Implementation of the New Source Review (NSR) Program for Particulate Matter Less Than 2.5 Micrometers ($PM_{2.5}$)," Federal Register, Vol. 73, No. 96, May 16.

EPA 2008.*Draft Scope and Methods Plan for Risk/Exposure Assessment: Secondary NAAQS Review for Oxides of Nitrogen and Oxides of Sulfur*, EPA-452/D-08-002, March.

Ohio Department of Job and Family Services, Bureau of Labor Market Information. Civilian Labor Force Estimates: April 2009. (http://lmi.state.oh.us). May 26, 2009.

Ohio EPA 2008. "$PM_{2.5}$ NSR Rule Implementation Issues," Inter-Office Communication from Mike Hopkins to Permit Writers and Reviewers, August 4.

Sargent & Lundy 2007."Flue Gas Desulfurization Technology Evaluation: Dry Lime vs. Wet Limestone FGD," prepared for National Lime Association, March.

USDA 2007. National Agriculture Statistics Service (www.agcensus.usda.gov), Census of Agriculture, Butler, Ohio.

USFWS 2008. http://www.fws.gov/midwest/endangered/lists/ohio-cty.html.
Vatavuk 1990. *Estimating Costs of Air Pollution Control.*

This page intentionally left blank.

Appendix A

MANUFACTURER'S LETTER

This page intentionally left blank.

Appendix B

FORMS

This page intentionally left blank.

Appendix C

SUPPORTING CALCULATIONS

This page intentionally left blank.

Appendix D

BEST AVAILABLE CONTROL TECHNOLOGY SUPPORTING INFORMATION

This page intentionally left blank.

Appendix E

COMPLIANCE ASSURANCE MONITORING PLAN

This page intentionally left blank.

Appendix F

DISPERSION MODELING FILES

This page intentionally left blank.