Complete Document Containing All Ohio EPA Air Pollution Regulations
Current as of September 4, 2015

Ohio EPA air pollution regulations are located in the Ohio Administrative Code (OAC) in chapters 3745-14 to 3745-26, 3745-31, 3745-71 to 3745-80, 3745-100, 3745-101, 3745-103 to 3745-105, and 3745-110 to 3745-114. Additional chapters are added as needed to address new laws and requirements related to air pollution control. This document contains a copy of all Ohio EPA's air pollution control rules in Ohio Administrative Code (OAC) Chapter 3745 in a single electronic file to facilitate universal language searches among rules. This document contains the most recent copy of each rule as of the date listed above.

Run-on Document, Modification Tracking

When a new or modified rule is added to the run-on file, the name and date are added to the tracking list. Tracking History is kept for the previous 12 months prior to the date of the current version. For a complete history, or if you have any questions regarding this document, contact Paul Braun at (614) 644-3734 or at paul.braun@epa.ohio.gov

Date	Rule or Chapter	General Actions
9/4/15	3745-14-(01, 03)	Added Final Version for 3/23/15
9/4/15	OAC Chapter 3745-15	Added Final Version for 7/20/15
9/4/15	OAC Chapter 3745-23	Added Final Version for 9/8/14
9/4/15	OAC Chapter 3745-26	Added Final Version for 2/12/15
9/4/15	3745-31-(01, 02, 04, 06-29, 32)	Added Final Version for 5/29/14
9/4/15	OAC Chapter 3745-111	Added Final Version for 6/25/15
9/4/15	OAC Chapter 3745-113	Added Final Version for 10/18/13
9/4/15	3745-114-01	Added Final Version for 2/12/15
9/4/15	3745-104-39	Added Final Version for 8/14/15

Table of Contents

RUN-ON DOCUMENT, MODIFICATION TRACKING ---------- II

CHAPTER 3745-14: NITROGEN OXIDES - BUDGET TRADING PROGRAM ---------- 1

3745-14-01 DEFINITIONS AND GENERAL PROVISIONS. ---------- 2
3745-14-02 THE NOX AUTHORIZED ACCOUNT REPRESENTATIVE. ---------- 34
3745-14-03 THE NOX BUDGET PERMIT. ---------- 39
3745-14-04 COMPLIANCE CERTIFICATION. ---------- 44
3745-14-05 NOX ALLOWANCE ALLOCATIONS. ---------- 47
3745-14-05 Appendix A ---------- 62
3745-14-05 Appendix B ---------- 65
3745-14-06 THE NOX ALLOWANCE TRACKING SYSTEM. ---------- 66
3745-14-07 NOX ALLOWANCE TRANSFERS. ---------- 78
3745-14-08 MONITORING AND REPORTING. ---------- 81
3745-14-09 NOX BUDGET OPT-IN UNITS. ---------- 96
3745-14-10 ALTERNATIVE COMPLIANCE PLANS. ---------- 105
3745-14-11 PORTLAND CEMENT KILNS. ---------- 107
3745-14-12 STATIONARY INTERNAL COMBUSTION ENGINES. ---------- 110

CHAPTER 3745-15: GENERAL PROVISIONS ON AIR POLLUTION CONTROL ---------- 114

3745-15-01 DEFINITIONS. ---------- 115
3745-15-02 PURPOSE. ---------- 120
3745-15-03 SUBMISSION OF EMISSION INFORMATION. ---------- 122
3745-15-04 MEASUREMENT OF EMISSIONS OF AIR CONTAMINANTS. ---------- 127
3745-15-05 "DE MINIMIS" AIR CONTAMINANT SOURCE EXEMPTION. ---------- 129
3745-15-06 MALFUNCTION OF EQUIPMENT; SCHEDULED MAINTENANCE; REPORTING. ---------- 134
3745-15-07 AIR POLLUTION NUISANCES PROHIBITED. ---------- 138
3745-15-08 CIRCUMVENTION. ---------- 140
3745-15-09 SEVERABILITY. ---------- 142

CHAPTER 3745-16: STACK HEIGHT REQUIREMENTS ---------- 144

3745-16-01 DEFINITIONS. ---------- 145
3745-16-02 GOOD ENGINEERING PRACTICE STACK HEIGHT REQUIREMENTS. ---------- 152

CHAPTER 3745-17: PARTICULATE MATTER STANDARDS ---------- 154

3745-17-01 DEFINITIONS. ---------- 155
3745-17-02 AMBIENT AIR QUALITY STANDARDS. ---------- 163
3745-17-03 MEASUREMENT METHODS AND PROCEDURES. ---------- 164
3745-17-04 COMPLIANCE TIME SCHEDULES. ---------- 176
3745-17-07 CONTROL OF VISIBLE PARTICULATE EMISSIONS FROM STATIONARY SOURCES. ---------- 185
3745-17-08 RESTRICTION OF EMISSION OF FUGITIVE DUST. ---------- 195
3745-17-08 Appendix A ---------- 200
3745-17-08 Appendix B ---------- 202
3745-17-09 RESTRICTIONS ON PARTICULATE EMISSIONS AND ODORS FROM INCINERATORS. ---------- 206
3745-17-10 RESTRICTIONS ON PARTICULATE EMISSIONS FROM FUEL BURNING EQUIPMENT. ---------- 208
3745-17-10 Appendix ---------- 214
3745-17-11 RESTRICTIONS ON PARTICULATE EMISSIONS FROM INDUSTRIAL PROCESSES. ---------- 215
3745-17-11 Appendix ---------- 222
3745-17-12 ADDITIONAL RESTRICTIONS ON PARTICULATE EMISSIONS FROM SPECIFIC AIR CONTAMINANT SOURCES IN CUYAHOGA COUNTY. ---------- 224
3745-17-13 ADDITIONAL RESTRICTIONS ON PARTICULATE EMISSIONS FROM SPECIFIC AIR CONTAMINANT SOURCES IN JEFFERSON COUNTY. ---------- 243
3745-17-13 Appendix ---------- 246

3745-17-14 CONTINGENCY PLAN REQUIREMENTS FOR CUYAHOGA AND JEFFERSON COUNTIES. --------- 263

CHAPTER 3745-18: SULFUR DIOXIDE REGULATIONS ---------- 267

3745-18-01 DEFINITIONS AND INCORPORATION BY REFERENCE. ---------- 268
3745-18-03 COMPLIANCE TIME SCHEDULES.---------- 275
3745-18-04 MEASUREMENT METHODS AND PROCEDURES. ---------- 294
3745-18-05 AMBIENT AND METEOROLOGICAL MONITORING REQUIREMENTS.---------- 306
3745-18-06 GENERAL EMISSION LIMIT PROVISIONS.---------- 308
3745-18-07 ADAMS COUNTY EMISSION LIMITS.---------- 311
3745-18-08 ALLEN COUNTY EMISSION LIMITS. ---------- 313
3745-18-09 ASHLAND COUNTY EMISSION LIMITS.---------- 317
3745-18-10 ASHTABULA COUNTY EMISSIONS LIMITS. ---------- 319
3745-18-11 ATHENS COUNTY EMISSION LIMITS.---------- 322
3745-18-12 AUGLAIZE COUNTY EMISSION LIMITS.---------- 324
3745-18-13 BELMONT COUNTY EMISSION LIMITS. ---------- 326
3745-18-14 BROWN COUNTY EMISSION LIMITS. ---------- 328
3745-18-15 BUTLER COUNTY EMISSION LIMITS.---------- 330
3745-18-16 CARROLL COUNTY EMISSION LIMITS.---------- 335
3745-18-17 CHAMPAIGN COUNTY EMISSION LIMITS. ---------- 337
3745-18-18 CLARK COUNTY EMISSION LIMITS.---------- 339
3745-18-19 CLERMONT COUNTY EMISSION LIMITS.---------- 341
3745-18-20 CLINTON COUNTY EMISSION LIMITS. ---------- 343
3745-18-21 COLUMBIANA COUNTY EMISSION LIMITS.---------- 345
3745-18-22 COSHOCTON COUNTY EMISSION LIMITS.---------- 347
3745-18-23 CRAWFORD COUNTY EMISSION LIMITS. ---------- 349
3745-18-24 CUYAHOGA COUNTY EMISSION LIMITS. ---------- 351
3745-18-25 DARKE COUNTY EMISSION LIMITS.---------- 362
3745-18-26 DEFIANCE COUNTY EMISSION LIMITS.---------- 364
3745-18-27 DELAWARE COUNTY EMISSION LIMITS.---------- 366
3745-18-28 ERIE COUNTY EMISSION LIMITS.---------- 368
3745-18-29 FAIRFIELD COUNTY EMISSION LIMITS.---------- 371
3745-18-30 FAYETTE COUNTY EMISSION LIMITS. ---------- 373
3745-18-31 FRANKLIN COUNTY EMISSION LIMITS.---------- 375
3745-18-32 FULTON COUNTY EMISSION LIMITS.---------- 381
3745-18-33 GALLIA COUNTY EMISSION LIMITS. ---------- 383
3745-18-34 GEAUGA COUNTY EMISSION LIMITS. ---------- 385
3745-18-35 GREENE COUNTY EMISSION LIMITS. ---------- 387
3745-18-36 GUERNSEY COUNTY EMISSION LIMITS. ---------- 390
3745-18-37 HAMILTON COUNTY EMISSION LIMITS.---------- 392
3745-18-38 HANCOCK COUNTY EMISSION LIMITS.---------- 401
3745-18-39 HARDIN COUNTY EMISSION LIMITS.---------- 403
3745-18-40 HARRISON COUNTY EMISSION LIMITS.---------- 405
3745-18-41 HENRY COUNTY EMISSION LIMITS.---------- 407
3745-18-42 HIGHLAND COUNTY EMISSION LIMIT.---------- 409
3745-18-43 HOCKING COUNTY EMISSION LIMITS.---------- 411
3745-18-44 HOLMES COUNTY EMISSION LIMITS. ---------- 413
3745-18-45 HURON COUNTY EMISSION LIMITS.---------- 415
3745-18-46 JACKSON COUNTY EMISSION LIMITS. ---------- 417
3745-18-47 JEFFERSON COUNTY EMISSION LIMITS.---------- 419
3745-18-48 KNOX COUNTY EMISSION LIMITS. ---------- 423
3745-18-49 LAKE COUNTY EMISSION LIMITS.---------- 425
3745-18-50 LAWRENCE COUNTY EMISSION LIMITS.---------- 429
3745-18-51 LICKING COUNTY EMISSION LIMITS.---------- 431
3745-18-52 LOGAN COUNTY EMISSION LIMITS.---------- 433
3745-18-53 LORAIN COUNTY EMISSION LIMITS.---------- 435
3745-18-54 LUCAS COUNTY EMISSION LIMITS. ---------- 439
3745-18-55 MADISON COUNTY EMISSION LIMITS.---------- 445

3745-18-56 MAHONING COUNTY EMISSION LIMITS. 447
3745-18-57 MARION COUNTY EMISSION LIMITS. 450
3745-18-58 MEDINA COUNTY EMISSION LIMITS. 452
3745-18-59 MEIGS COUNTY EMISSION LIMITS. 454
3745-18-60 MERCER COUNTY EMISSION LIMITS. 456
3745-18-61 MIAMI COUNTY EMISSION LIMITS. 458
3745-18-62 MONROE COUNTY EMISSION LIMITS. 460
3745-18-63 MONTGOMERY COUNTY EMISSION LIMITS. 462
3745-18-64 MORGAN COUNTY EMISSION LIMITS. 466
3745-18-65 MORROW COUNTY EMISSION LIMITS. 468
3745-18-66 MUSKINGUM COUNTY EMISSION LIMITS. 470
3745-18-67 NOBLE COUNTY EMISSION LIMITS. 472
3745-18-68 OTTAWA COUNTY EMISSION LIMITS. 474
3745-18-69 PAULDING COUNTY EMISSION LIMITS. 476
3745-18-70 PERRY COUNTY EMISSION LIMITS. 478
3745-18-71 PICKAWAY COUNTY EMISSION LIMITS. 480
3745-18-72 PIKE COUNTY EMISSION LIMITS. 482
3745-18-73 PORTAGE COUNTY EMISSION LIMITS. 484
3745-18-74 PREBLE COUNTY EMISSION LIMITS. 486
3745-18-75 PUTNAM COUNTY EMISSION LIMITS. 488
3745-18-76 RICHLAND COUNTY EMISSION LIMITS. 490
3745-18-77 ROSS COUNTY EMISSION LIMITS. 492
3745-18-78 SANDUSKY COUNTY EMISSION LIMITS. 494
3745-18-79 SCIOTO COUNTY EMISSION LIMITS. 497
3745-18-80 SENECA COUNTY EMISSION LIMITS. 499
3745-18-81 SHELBY COUNTY EMISSION LIMITS. 502
3745-18-82 STARK COUNTY EMISSION LIMITS. 504
3745-18-83 SUMMIT COUNTY EMISSION LIMITS. 509
3745-18-84 TRUMBULL COUNTY EMISSION LIMITS. 515
3745-18-85 TUSCARAWAS COUNTY EMISSION LIMITS. 519
3745-18-86 UNION COUNTY EMISSION LIMITS. 522
3745-18-87 VAN WERT COUNTY EMISSION LIMITS. 524
3745-18-88 VINTON COUNTY EMISSION LIMITS. 526
3745-18-89 WARREN COUNTY EMISSION LIMITS. 528
3745-18-90 WASHINGTON COUNTY EMISSION LIMITS. 530
3745-18-91 WAYNE COUNTY EMISSION LIMITS. 532
3745-18-92 WILLIAMS COUNTY EMISSION LIMITS. 535
3745-18-93 WOOD COUNTY EMISSION LIMITS. 537
3745-18-94 WYANDOT COUNTY EMISSION LIMITS. 539

CHAPTER 3745-19: OPEN BURNING STANDARDS 541

3745-19-01 DEFINITIONS. 542
3745-19-02 RELATIONS TO OTHER PROHIBITIONS. 547
3745-19-03 OPEN BURNING IN RESTRICTED AREAS. 549
3745-19-03 Appendix 553
3745-19-04 OPEN BURNING IN UNRESTRICTED AREAS. 557
3745-19-05 PERMISSION TO INDIVIDUALS AND NOTIFICATION TO THE OHIO EPA. 562
3745-19-06 OPEN BURNING UNILATERAL ORDER. 565

CHAPTER 3745-20: ASBESTOS EMISSION CONTROL 567

3745-20-01 DEFINITIONS AND INCORPORATION BY REFERENCE. 568
3745-20-02 STANDARDS FOR DEMOLITION AND RENOVATION, FACILITY INSPECTION, AND DETERMINATION OF APPLICABILITY. 577
3745-20-03 STANDARD FOR NOTIFICATION PRIOR TO DEMOLITION OR RENOVATION. 580
3745-20-04 DEMOLITION AND RENOVATION PROCEDURES FOR ASBESTOS EMISSION CONTROL. 585
3745-20-05 STANDARD FOR ASBESTOS WASTE HANDLING. 592
3745-20-06 STANDARD FOR ACTIVE ASBESTOS WASTE DISPOSAL SITES. 600

3745-20-07 STANDARD FOR INACTIVE ASBESTOS WASTE DISPOSAL SITES. ---------- 603
3745-20-08 REPORTING, CERTIFICATION AND PERMIT APPLICATION REQUIREMENTS.---------- 607
3745-20-09 STANDARD FOR ROADWAYS.---------- 611
3745-20-10 STANDARDS FOR ASBESTOS MILLS AND MANUFACTURING.---------- 613
3745-20-11 STANDARD FOR FABRICATING.---------- 616
3745-20-12 AIR CLEANING. ---------- 619
3745-20-13 STANDARD FOR OPERATIONS THAT CONVERT ASBESTOS-CONTAINING WASTE MATERIAL INTO NONASBESTOS (ASBESTOS-FREE) MATERIAL. ---------- 622
3745-20-14 STANDARD FOR INSULATING MATERIALS.---------- 627
3745-20-15 STANDARD FOR SPRAYING. ---------- 629

CHAPTER 3745-21: CARBON MONOXIDE, PHOTOCHEMICALLY REACTIVE MATERIALS, HYDROCARBONS, AND RELATED MATERIALS STANDARDS ---------- 631

3745-21-01 DEFINITIONS. ---------- 632
3745-21-02 AMBIENT AIR QUALITY STANDARDS AND GUIDELINES.---------- 748
3745-21-03 METHODS OF AMBIENT AIR QUALITY MEASUREMENT.---------- 749
3745-21-04 COMPLIANCE TIME SCHEDULES.---------- 751
3745-21-06 CLASSIFICATION OF REGIONS. ---------- 769
3745-21-07 CONTROL OF EMISSIONS OF ORGANIC MATERIALS FROM STATIONARY SOURCES (I.E., EMISSIONS THAT ARE NOT REGULATED BY RULE 3745-21-09, 3745-21-12, 3745-21-13, 3745-21-14, 3745-21-15, 3745-21-16, OR 3745-21-18 OF THE ADMINISTRATIVE CODE). ---------- 771
3745-21-08 CONTROL OF CARBON MONOXIDE EMISSIONS FROM STATIONARY SOURCES. ---------- 788
3745-21-09 CONTROL OF EMISSIONS OF VOLATILE ORGANIC COMPOUNDS FROM STATIONARY SOURCES AND PERCHLOROETHYLENE FROM DRY CLEANING FACILITIES.---------- 790
3745-21-09 APPENDIX A ---------- 920
3745-21-09 APPENDIX B ---------- 925
3745-21-10 COMPLIANCE TEST METHODS AND PROCEDURES. ---------- 927
3745-21-10 APPENDIX A ---------- 948
3745-21-10 APPENDIX B ---------- 960
3745-21-10 APPENDIX C ---------- 973
3745-21-11 REASONABLY AVAILABLE CONTROL TECHNOLOGY STUDIES FOR OZONE NON-ATTAINMENT AREAS. ---------- 974
3745-21-12 CONTROL OF VOLATILE ORGANIC COMPOUND EMISSIONS FROM COMMERCIAL BAKERY OVEN FACILITIES. ---------- 975
3745-21-13 CONTROL OF VOLATILE ORGANIC COMPOUND EMISSIONS FROM REACTORS AND DISTILLATION UNITS EMPLOYED IN SOCMI CHEMICAL PRODUCTION.---------- 987
3745-21-14 CONTROL OF VOLATILE ORGANIC COMPOUND EMISSIONS FROM PROCESS VENTS IN BATCH OPERATIONS. ----------1027
3745-21-15 CONTROL OF VOLATILE ORGANIC COMPOUND EMISSIONS FROM WOOD FURNITURE MANUFACTURING OPERATIONS. ----------1046
3745-21-16 CONTROL OF VOLATILE ORGANIC COMPOUND EMISSIONS FROM INDUSTRIAL WASTEWATER.----------1078
3745-21-17 PORTABLE FUEL CONTAINERS.----------1107
3745-21-18 COMMERCIAL MOTOR VEHICLE AND MOBILE EQUIPMENT REFINISHING OPERATIONS. ----1110
3745-21-19 CONTROL OF VOLATILE ORGANIC COMPOUND EMISSIONS FROM AEROSPACE MANUFACTURING AND REWORK FACILITIES.----------1116
3745-21-20 CONTROL OF VOLATILE ORGANIC EMISSIONS FROM SHIPBUILDING AND SHIP REPAIR OPERATIONS (MARINE COATINGS).----------1137
3745-21-21 STORAGE OF VOLATILE ORGANIC LIQUIDS IN FIXED ROOF TANKS AND EXTERNAL FLOATING ROOF TANKS. ----------1156
3745-21-22 CONTROL OF VOLATILE ORGANIC COMPOUND EMISSIONS FROM OFFSET LITHOGRAPHIC PRINTING AND LETTERPRESS PRINTING FACILITIES. ----------1173
3745-21-23 CONTROL OF VOLATILE ORGANIC COMPOUND EMISSIONS FROM INDUSTRIAL SOLVENT CLEANING OPERATIONS. ----------1191
3745-21-24 FLAT WOOD PANELING COATINGS. ----------1208

3745-21-25 CONTROL OF VOC EMISSIONS FROM REINFORCED PLASTIC COMPOSITES PRODUCTION OPERATIONS. ----------1216
3745-21-27 BOAT MANUFACTURING. ----------1256
3745-21-28 MISCELLANEOUS INDUSTRIAL ADHESIVES AND SEALANTS. ----------1275
3745-21-29 CONTROL OF VOLATILE ORGANIC COMPOUND EMISSIONS FROM AUTOMOBILE AND LIGHT-DUTY TRUCK ASSEMBLY COATING OPERATIONS, HEAVIER VEHICLE ASSEMBLY COATING OPERATIONS, AND CLEANING OPERATIONS ASSOCIATED WITH THESE COATING OPERATIONS. ----------1288

CHAPTER 3745-22: OXYGENATED FUEL REQUIREMENTS---------- 1305

CHAPTER 3745-23: NITROGEN OXIDE STANDARDS ---------- 1306

3745-23-01 DEFINITIONS. ----------1307
3745-23-02 METHODS OF MEASUREMENT. ----------1309

CHAPTER 3745-24: NOX AND VOC EMISSION STATEMENTS ---------- 1311

3745-24-01 DEFINITIONS. ----------1312
3745-24-02 APPLICABILITY. ----------1314
3745-24-03 DEADLINES FOR SUBMISSION OF THE EMISSION STATEMENTS. ----------1316
3745-24-04 EMISSION STATEMENT REQUIREMENTS.----------1318

CHAPTER 3745-25: EMERGENCY EPISODE STANDARDS ---------- 1320

3745-25-01 DEFINITIONS AND REFERENCE TO MATERIALS. ----------1321
3745-25-02 AMBIENT AIR QUALITY STANDARDS. ----------1325
3745-25-03 AIR POLLUTION EMERGENCIES AND EPISODE CRITERIA. ----------1330
3745-25-04 AIR POLLUTION EMERGENCY EMISSION CONTROL ACTION PROGRAMS.----------1334
3745-25-04 Appendix---------- 1337
3745-25-05 AIR POLLUTION EMERGENCY ORDERS. ----------1341

CHAPTER 3745-26: I/M PROGRAM RULES AND REGULATIONS ---------- 1346

3745-26-01 DEFINITIONS. ----------1347
3745-26-10 REQUIREMENTS FOR CONTRACTORS IN THE ENHANCED AUTOMOBILE INSPECTION AND MAINTENANCE PROGRAM.----------1354
3745-26-12 REQUIREMENTS FOR MOTOR VEHICLE OWNERS IN THE ENHANCED AUTOMOBILE INSPECTION AND MAINTENANCE PROGRAM.----------1357
3745-26-13 REQUIREMENTS FOR CERTIFIED INSPECTORS IN THE ENHANCED AUTOMOBILE INSPECTION AND MAINTENANCE PROGRAM.----------1368
3745-26-14 ENFORCEMENT OF PROGRAM RULES AND REGULATIONS FOR THE ENHANCED AUTOMOBILE INSPECTION AND MAINTENANCE PROGRAM. ----------1370
3745-26-15 WAIVER REPAIR FACILITY CERTIFICATION PROCEDURES, REQUIREMENTS, AND OBLIGATIONS. ----------1372
3745-26-16 REQUIREMENTS FOR CERTIFIED WAIVER REPAIR TECHNICIANS AND APPROVED TECHNICIAN TRAINERS.----------1376

CHAPTER 3745-31: PERMITS TO INSTALL NEW SOURCES---------- 1379

3745-31-01 DEFINITIONS. ----------1380
3745-31-02 APPLICABILITY, REQUIREMENTS, AND OBLIGATIONS. ----------1431
3745-31-03 EXEMPTIONS AND PERMITS-BY-RULE. ----------1437
3745-31-04 APPLICATIONS. ----------1485
3745-31-05 CRITERIA FOR DECISION BY THE DIRECTOR. ----------1487
3745-31-06 COMPLETENESS DETERMINATIONS, PROCESSING REQUIREMENTS, PUBLIC PARTICIPATION, PUBLIC NOTICE, AND ISSUANCE. ----------1496
3745-31-07 TERMINATION, REVOCATION, EXPIRATION, RENEWAL, REVISION AND TRANSFER. ----------1502
3745-31-08 REGISTRATION STATUS PERMIT-TO-OPERATE.----------1506
3745-31-09 VARIANCES ON OPERATION.----------1509
3745-31-10 NSR PROJECTS AT EXISTING EMISSIONS UNITS AT A MAJOR STATIONARY SOURCE. ---------1516
3745-31-11 ATTAINMENT PROVISIONS - AMBIENT AIR INCREMENTS, CEILINGS AND CLASSIFICATIONS. ----------1520

3745-31-12 ATTAINMENT PROVISIONS - DATA SUBMISSION REQUIREMENTS.----------1526
3745-31-13 ATTAINMENT PROVISIONS - REVIEW OF MAJOR STATIONARY SOURCES AND MAJOR MODIFICATIONS, STATIONARY SOURCE APPLICABILITY AND EXEMPTIONS.----------1528
3745-31-14 ATTAINMENT PROVISIONS - PREAPPLICATION ANALYSIS. ----------1532
3745-31-15 ATTAINMENT PROVISIONS - CONTROL TECHNOLOGY REVIEW.----------1535
3745-31-16 ATTAINMENT PROVISIONS - MAJOR STATIONARY SOURCE IMPACT ANALYSIS.----------1537
3745-31-17 ATTAINMENT PROVISIONS - ADDITIONAL IMPACT ANALYSIS.----------1539
3745-31-18 ATTAINMENT PROVISIONS - AIR QUALITY MODELS. ----------1541
3745-31-19 ATTAINMENT PROVISIONS - NOTICE TO THE UNITED STATES ENVIRONMENTAL PROTECTION AGENCY. ----------1543
3745-31-20 ATTAINMENT PROVISIONS - INNOVATIVE CONTROL TECHNOLOGY. ----------1547
3745-31-21 NONATTAINMENT PROVISIONS - REVIEW OF MAJOR STATIONARY SOURCES AND MAJOR MODIFICATIONS - STATIONARY SOURCE APPLICABILITY AND EXEMPTIONS.----------1550
3745-31-22 NONATTAINMENT PROVISIONS - CONDITIONS FOR APPROVAL. ----------1554
3745-31-23 NONATTAINMENT PROVISIONS - STATIONARY SOURCES LOCATING IN DESIGNATED CLEAN OR UNCLASSIFIABLE AREAS WHICH WOULD CAUSE OR CONTRIBUTE TO A VIOLATION OF A NATIONAL AMBIENT AIR QUALITY STANDARD. ----------1558
3745-31-24 NONATTAINMENT PROVISIONS - BASELINE FOR DETERMINING CREDIT FOR EMISSION AND AIR QUALITY OFFSETS. ----------1562
3745-31-25 NONATTAINMENT PROVISIONS - LOCATION OF OFFSETTING EMISSIONS. ----------1567
3745-31-26 NONATTAINMENT PROVISIONS - OFFSET RATIO REQUIREMENTS. ----------1569
3745-31-27 NONATTAINMENT PROVISIONS - ADMINISTRATIVE PROCEDURES FOR EMISSION OFFSETS.----------1572
3745-31-28 REVIEW OF MAJOR STATIONARY SOURCES OF HAZARDOUS AIR POLLUTANTS REQUIRING MACT DETERMINATIONS.----------1575
3745-31-29 GENERAL PERMIT-TO-INSTALL AND GENERAL PTIO. ----------1580
3745-31-32 PLANTWIDE APPLICABILITY LIMIT (PAL).----------1587
3745-31-33 SITE PREPARATION ACTIVITIES PRIOR TO OBTAINING A FINAL PERMIT-TO-INSTALL OR PTIO. ----------1601
3745-31-34 PERMITS TO INSTALL FOR MAJOR STATIONARY SOURCES AND MAJOR MODIFICATIONS OF SOURCES EMITTING GREENHOUSE GASES. ----------1606

CHAPTER 3745-35: RESERVED---------- 1611

CHAPTER 3745-71: LEAD EMISSIONS ---------- 1612

3745-71-01 DEFINITIONS AND REFERENCE TO MATERIALS. ----------1613
3745-71-02 AMBIENT AIR QUALITY STANDARDS - LEAD. ----------1615
3745-71-03 METHODS OF AMBIENT AIR MEASUREMENT. ----------1616
3745-71-04 ATTAINMENT DATE.----------1618
3745-71-05 EMISSIONS TEST METHODS AND PROCEDURES AND REPORTING REQUIREMENTS FOR NEW AND EXISTING SOURCES.----------1619
3745-71-06 SOURCE SPECIFIC EMISSION LIMITS. ----------1620

CHAPTER 3745-72: LOW REID VAPOR PRESSURE FUEL REQUIREMENTS---------- 1621

3745-72-01 APPLICABILITY. ----------1622
3745-72-02 DEFINITIONS. ----------1626
3745-72-03 GASOLINE VOLATILITY STANDARDS AND GENERAL PROVISIONS. ----------1631
3745-72-04 TRANSFER DOCUMENTATION AND RECORDKEEPING. ----------1633
3745-72-05 LIABILITY.----------1636
3745-72-06 DEFENSES.----------1640
3745-72-07 SPECIAL PROVISIONS FOR ALCOHOL BLENDS. ----------1643
3745-72-08 QUALITY ASSURANCE AND TEST METHODS.----------1645

CHAPTER 3745-73: TOTAL REDUCED SULFUR ---------- 1647

3745-73-01 DEFINITIONS AND REFERENCE TO MATERIALS. ----------1648
3745-73-02 CERTIFICATION AND COMPLIANCE TIME SCHEDULES.----------1651
3745-73-03 GENERAL EMISSION LIMITS.----------1654
3745-73-04 EMISSION TEST METHODS AND REPORTING REQUIREMENTS.----------1657

CHAPTER 3745-74: ACRYLONITRILE SERVICES ---------- 1659

CHAPTER 3745-75: INFECTIOUS WASTE INCINERATOR LIMITATIONS ---------- 1660

3745-75-01 APPLICABILITY, DEFINITIONS, AND REFERENCE TO MATERIALS. ----------1661
3745-75-02 EMISSION LIMITS. ----------1675
3745-75-03 DESIGN PARAMETERS AND OPERATING RESTRICTIONS. ----------1680
3745-75-04 MONITORING REQUIREMENTS. ----------1687
3745-75-05 RECORDKEEPING AND INSPECTIONS. ----------1690
3745-75-06 CERTIFICATION AND COMPLIANCE TIME SCHEDULES. ----------1694

CHAPTER 3745-76: CONTROL OF NON-METHANE ORGANIC COMPOUND (NMOC) EMISSIONS FROM EXISTING LANDFILLS ---------- 1701

3745-76-01 DEFINITIONS. ----------1702
3745-76-02 DESIGNATED FACILITIES. ----------1710
3745-76-03 CONTROL REQUIREMENTS FOR MUNICIPAL SOLID WASTE LANDFILLS. ----------1712
3745-76-04 TEST METHODS AND PROCEDURES. ----------1714
3745-76-06 COMPLIANCE TIMES. ----------1717
3745-76-07 STANDARDS FOR AIR EMISSIONS FROM MUNICIPAL WASTE LANDFILLS. ----------1719
3745-76-08 OPERATIONAL STANDARDS FOR COLLECTION AND CONTROL SYSTEMS. ----------1725
3745-76-09 TEST METHODS AND PROCEDURES. ----------1728
3745-76-10 COMPLIANCE PROVISIONS. ----------1735
3745-76-11 MONITORING OF OPERATIONS. ----------1741
3745-76-12 REPORTING REQUIREMENTS. ----------1744
3745-76-13 RECORDKEEPING REQUIREMENTS. ----------1750
3745-76-14 SPECIFICATIONS FOR ACTIVE COLLECTION SYSTEMS. ----------1755
3745-76-15 FLARE REQUIREMENTS. ----------1759

CHAPTER 3745-77: TITLE V PERMIT RULES ---------- 1764

3745-77-01 DEFINITIONS. ----------1765
3745-77-02 PROHIBITION AND APPLICABILITY. ----------1781
3745-77-03 CONTENT OF A PERMIT APPLICATION. ----------1785
3745-77-04 TRANSITION AND APPLICATION FILING DATES. ----------1792
3745-77-04 Appendix A ---------- 1795
3745-77-04 Appendix B ---------- 1797
3745-77-04 Appendix C ---------- 1799
3745-77-05 APPLICATION COMPLETENESS DETERMINATION. ----------1801
3745-77-06 APPLICATION SHIELD. ----------1803
3745-77-07 PERMIT CONTENT. ----------1805
3745-77-08 PERMIT ISSUANCE, MODIFICATIONS, REVISIONS, REVOCATIONS, REOPENINGS, AND TERMINATION. ----------1822
3745-77-09 PERMIT REVIEW BY THE ADMINISTRATOR AND AFFECTED STATES. ----------1837
3745-77-10 STATE LAW APPLICABILITY. ----------1840
3745-77-11 TITLE V PERMITS FOR MAJOR SOURCES EMITTING GREENHOUSE GASES. ----------1843

CHAPTER 3745-78: AIR POLLUTION CONTROL FEES ---------- 1848

3745-78-01 DEFINITIONS. ----------1849
3745-78-02 FEE EMISSION REPORTS. ----------1851

CHAPTER 3745-79: SMALL BUSINESS TECHNICAL ASSISTANCE ---------- 1854

3745-79-01 DEFINITIONS. ----------1855
3745-79-02 REGISTRATION. ----------1858
3745-79-03 NOTICES RELATING TO RIGHTS AND OBLIGATIONS. ----------1860

CHAPTER 3745-80: STATEWIDE MOTOR VEHICAL ANTI-TEMPERING PROGRAM ---------- 1862

3745-80-01 DEFINITIONS. ----------1863
3745-80-02 TAMPERING PROHIBITIONS. ----------1867
3745-80-03 ANTI-TAMPERING INSPECTION PROCEDURES AND REQUIREMENTS. ----------1870

CHAPTER 3745-100: TOXIC CHEMICAL RELEASE REPORTING (TRI) ---------- 1873

3745-100-01 DEFINITIONS. ---------- 1874
3745-100-02 PERSONS SUBJECT TO THIS CHAPTER. ---------- 1885
3745-100-03 RECORD KEEPING. ---------- 1887
3745-100-04 COMPLIANCE AND ENFORCEMENT. ---------- 1890
3745-100-05 COVERED FACILITIES FOR TOXIC CHEMICAL RELEASE REPORTING. ---------- 1892
3745-100-06 THRESHOLDS FOR REPORTING. ---------- 1895
3745-100-07 REPORTING REQUIREMENTS AND SCHEDULE FOR REPORTING. ---------- 1898
3745-100-08 EXEMPTIONS. ---------- 1903
3745-100-09 NOTIFICATION ABOUT TOXIC CHEMICALS. ---------- 1907
3745-100-10 APPLICABLE CHEMICALS AND CHEMICAL CATEGORIES. ---------- 1911
3745-100-11 TOXIC CHEMICAL RELEASE REPORTING FORM AND INSTRUCTIONS. ---------- 1948
3745-100-12 FEE SYSTEM. ---------- 1953
3745-100-13 TRADE SECRET CLAIMS. ---------- 1955
3745-100-14 ALTERNATE THRESHOLD AND CERTIFICATION. ---------- 1958
3745-100-15 ALTERNATE THRESHOLD CERTIFICATION AND INSTRUCTIONS. ---------- 1962
3745-100-16 LOWER THRESHOLDS FOR CHEMICALS OF SPECIAL CONCERN. ---------- 1965
3745-100-17 SIC AND NAICS CODES TO WHICH THIS CHAPTER APPLIES. ---------- 1969

CHAPTER 3745-101: TRANSPORTATION CONFORMITY RULES ---------- 1977

3745-101-01 PURPOSE. ---------- 1978
3745-101-02 DEFINITIONS. ---------- 1980
3745-101-03 APPLICABILITY, PRIORITY, AND FREQUENCY OF CONFORMITY DETERMINATIONS. ---------- 1997
3745-101-04 CONSULTATION. ---------- 2002
3745-101-05 PROCEDURES FOR DETERMINING REGIONAL TRANSPORTATION-RELATED EMISSIONS. ---------- 2012
3745-101-06 ENFORCEABILITY OF DESIGN CONCEPT AND SCOPE AND PROJECT-LEVEL MITIGATION AND CONTROL MEASURES. ---------- 2019

CHAPTER 3745-102: GENERAL CONFORMITY RULES ---------- 2021

3745-102-01 PURPOSE. ---------- 2022
3745-102-02 DEFINITIONS. ---------- 2025
3745-102-03 APPLICABILITY. ---------- 2036
3745-102-04 CONFORMITY ANALYSIS, REPORTING REQUIREMENTS, PUBLIC PARTICIPATION AND CONSULTATION. ---------- 2044
3745-102-05 CONFORMITY DETERMINATIONS. ---------- 2047
3745-102-06 MITIGATION OF AIR QUALITY IMPACTS. ---------- 2055

CHAPTER 3745-103: ACID RAIN PERMITS AND COMPLIANCE ---------- 2057

3745-103-01 DEFINITIONS AND REFERENCE TO MATERIALS. ---------- 2058
3745-103-02 APPLICABILITY. ---------- 2095
3745-103-03 NEW UNITS EXEMPTION. ---------- 2100
3745-103-04 RETIRED UNITS EXEMPTION. ---------- 2107
3745-103-05 STANDARD REQUIREMENTS. ---------- 2111
3745-103-06 DESIGNATED REPRESENTATIVE. ---------- 2117
3745-103-07 ACID RAIN PERMIT APPLICATIONS. ---------- 2120
3745-103-08 PERMIT APPLICATION SHIELD AND BINDING EFFECT OF PERMIT APPLICATION. ---------- 2123
3745-103-09 ACID RAIN COMPLIANCE PLAN AND COMPLIANCE OPTIONS. ---------- 2125
3745-103-11 ACID RAIN PERMIT. ---------- 2129
3745-103-12 PERMIT SHIELD. ---------- 2131
3745-103-13 ISSUANCE OF ACID RAIN PERMITS. ---------- 2133
3745-103-14 ACID RAIN PERMIT APPEAL PROCEDURES. ---------- 2136
3745-103-15 PERMIT REVISIONS. ---------- 2138
3745-103-16 PERMIT MODIFICATIONS. ---------- 2140
3745-103-17 FAST-TRACK MODIFICATIONS. ---------- 2142
3745-103-18 ADMINISTRATIVE PERMIT AMENDMENT. ---------- 2144
3745-103-19 AUTOMATIC PERMIT AMENDMENT. ---------- 2147
3745-103-20 PERMIT REOPENINGS. ---------- 2149

3745-103-21 UNITS WITH REPOWERING EXTENSION PLANS.----------2151
3745-103-22 OPT-IN PURPOSE AND SCOPE. ----------2153
3745-103-23 OPT-IN APPLICABILITY.----------2155
3745-103-24 OPT-IN RELATIONSHIP TO THE ACID RAIN PROGRAM REQUIREMENTS.----------2157
3745-103-25 OPT-IN DESIGNATED REPRESENTATIVE. ----------2160
3745-103-26 ROLES - USEPA AND DIRECTOR. ----------2162
3745-103-27 OPT-IN PERMIT CONTENTS. ----------2164
3745-103-28 OPT-IN PERMIT PROCESS. ----------2167
3745-103-29 OPT-IN APPLICATION REQUIREMENTS FOR COMBUSTION SOURCES. ----------2171
3745-103-30 APPLICATION REQUIREMENTS FOR PROCESS SOURCES.----------2174
3745-103-31 OPT-IN WITHDRAWAL.----------2176
3745-103-32 REVISION AND RENEWAL OF OPT-IN PERMIT. ----------2179
3745-103-33 OPT-IN DATA FOR BASELINE AND ALTERNATIVE BASELINE.----------2181
3745-103-34 ACTUAL SO_2 EMISSIONS RATE. ----------2185
3745-103-35 1985 ALLOWABLE SO_2 EMISSIONS RATE.----------2188
3745-103-36 CURRENT ALLOWABLE SO_2 EMISSIONS RATE. ----------2191
3745-103-37 CURRENT PROMULGATED SO_2 EMISSIONS LIMIT. ----------2193
3745-103-38 OPT-IN ALLOCATION FORMULA. ----------2195
3745-103-39 ALLOWANCE ALLOCATION FOR COMBUSTION SOURCES BECOMING OPT-IN SOURCES ON A DATE OTHER THAN JANUARY FIRST. ----------2197
3745-103-40 ALLOWANCE CALCULATION FOR PROCESS SOURCES. ----------2200
3745-103-41 ESTABLISHMENT OF OPT-IN SOURCE ALLOWANCE ACCOUNTS. ----------2202
3745-103-42 IDENTIFYING ALLOWANCES.----------2204
3745-103-43 PROHIBITION ON FUTURE YEAR TRANSFERS.----------2206
3745-103-44 ANNUAL COMPLIANCE CERTIFICATION REPORT.----------2208
3745-103-45 REDUCED UTILIZATION FOR COMBUSTION SOURCES.----------2211
3745-103-46 REDUCED UTILIZATION FOR PROCESS SOURCES. ----------2223
3745-103-47 OPT-IN SOURCE PERMANENT SHUTDOWN, RECONSTRUCTION, OR CHANGE IN AFFECTED STATUS.----------2225
3745-103-48 TRANSFER OF ALLOWANCES FROM THE REPLACEMENT OF THERMAL ENERGY; COMBUSTION SOURCES.----------2228
3745-103-49 TRANSFER OF ALLOWANCES FROM THE REPLACEMENT OF THERMAL ENERGY -- PROCESS SOURCES. ----------2236
3745-103-50 CALCULATION FOR DEDUCTING ALLOWANCES. ----------2238
3745-103-51 DEDUCTING OPT-IN SOURCE ALLOWANCES FROM ALLOWANCE TRACKING SYSTEM ACCOUNTS.----------2240
3745-103-52 MONITORING REQUIREMENTS.----------2243
3745-103-53 MONITORING PLAN. ----------2245
3745-103-54 MONITORING EMISSIONS; PROCESS SOURCES.----------2247
3745-103-55 NO_x APPLICABILITY. ----------2249
3745-103-56 GENERAL ACID RAIN PROGRAM PROVISIONS.----------2251
3745-103-57 NO_x EMISSION LIMITATIONS FOR GROUP ONE PHASE I BOILERS. ----------2253
3745-103-58 NO_x EMISSION LIMITATIONS FOR GROUP TWO BOILERS.----------2256
3745-103-59 NO_x EMISSION LIMITATIONS FOR GROUP ONE, PHASE II BOILERS. ----------2258
3745-103-60 EARLY ELECTION FOR GROUP ONE, PHASE II BOILERS. ----------2260
3745-103-61 PERMIT APPLICATION AND COMPLIANCE PLANS.----------2264
3745-103-62 ALTERNATIVE EMISSION LIMITATIONS.----------2267
3745-103-63 EMISSIONS AVERAGING. ----------2278
3745-103-65 MONITORING, RECORDKEEPING, AND REPORTING.----------2285
3745-103-66 TEST METHODS AND PROCEDURES. ----------2289

CHAPTER 3745-104: ACCIDENTAL RELEASES PREVENTION PROGRAM ---------- 2293

3745-104-01 DEFINITIONS.----------2294
3745-104-02 THRESHOLD DETERMINATION. ----------2303
3745-104-03 EXEMPTIONS.----------2307
3745-104-04 LIST OF SUBSTANCES. ----------2309
3745-104-04 Appendix ---------- 2311

3745-104-05 APPLICABILITY.----------2325
3745-104-06 GENERAL REQUIREMENTS.----------2328
3745-104-07 MANAGEMENT.----------2331
3745-104-08 HAZARD ASSESSMENT: APPLICABILITY. ----------2333
3745-104-09 HAZARD ASSESSMENT: OFFSITE CONSEQUENCE ANALYSIS PARAMETERS. ----------2335
3745-104-09 Appendix ---------- 2338
3745-104-10 HAZARD ASSESSMENT: WORST-CASE RELEASE SCENARIO ANALYSIS.----------2341
3745-104-11 HAZARD ASSESSMENT: ALTERNATIVE RELEASE SCENARIO ANALYSIS. ----------2346
3745-104-12 HAZARD ASSESSMENT: DEFINING OFFSITE IMPACTS - POPULATION. ----------2349
3745-104-13 HAZARD ASSESSMENT: DEFINING OFFSITE IMPACTS - ENVIRONMENT.----------2351
3745-104-14 HAZARD ASSESSMENT: REVIEW AND UPDATE. ----------2353
3745-104-15 HAZARD ASSESSMENT: DOCUMENTATION. ----------2355
3745-104-16 HAZARD ASSESSMENT: FIVE-YEAR ACCIDENT HISTORY. ----------2357
3745-104-17 PROGRAM TWO PREVENTION PROGRAM: SAFETY INFORMATION.----------2359
3745-104-18 PROGRAM TWO PREVENTION PROGRAM: HAZARD REVIEW.----------2361
3745-104-19 PROGRAM TWO PREVENTION PROGRAM: OPERATING PROCEDURES. ----------2363
3745-104-20 PROGRAM TWO PREVENTION PROGRAM: TRAINING. ----------2365
3745-104-21 PROGRAM TWO PREVENTION PROGRAM: MAINTENANCE. ----------2367
3745-104-22 PROGRAM TWO PREVENTION PROGRAM: COMPLIANCE AUDITS. ----------2369
3745-104-23 PROGRAM TWO PREVENTION PROGRAM: INCIDENT INVESTIGATION.----------2371
3745-104-24 PROGRAM THREE PREVENTION PROGRAM: PROCESS SAFETY INFORMATION.----------2373
3745-104-25 PROGRAM THREE PREVENTION PROGRAM: PROCESS HAZARD ANALYSIS. ----------2376
3745-104-26 PROGRAM THREE PREVENTION PROGRAM: OPERATING PROCEDURES.----------2379
3745-104-27 PROGRAM THREE PREVENTION PROGRAM: TRAINING.----------2382
3745-104-28 PROGRAM THREE PREVENTION PROGRAM: MECHANICAL INTEGRITY. ----------2384
3745-104-29 PROGRAM THREE PREVENTION PROGRAM: MANAGEMENT OF CHANGE. ----------2387
3745-104-30 PROGRAM THREE PREVENTION PROGRAM: PRE-STARTUP REVIEW.----------2389
3745-104-31 PROGRAM THREE PREVENTION PROGRAM: COMPLIANCE AUDITS.----------2391
3745-104-32 PROGRAM THREE PREVENTION PROGRAM: INCIDENT INVESTIGATION. ----------2393
3745-104-33 PROGRAM THREE PREVENTION PROGRAM: EMPLOYEE PARTICIPATION. ----------2395
3745-104-34 PROGRAM THREE PREVENTION PROGRAM: HOT WORK PERMIT. ----------2397
3745-104-35 PROGRAM THREE PREVENTION PROGRAM: CONTRACTORS. ----------2399
3745-104-36 EMERGENCY RESPONSE: APPLICABILITY. ----------2402
3745-104-37 EMERGENCY RESPONSE PROGRAM.----------2404
3745-104-38 RISK MANAGEMENT PLAN: SUBMISSION.----------2406
3745-104-39 ASSERTATION OF CLAIMS OF TRADE SECRET INFORMATION. ----------2409
3745-104-40 SUBSTANTIATING TRADE SECRET INFORMATION. ----------2412
3745-104-41 RISK MANAGEMENT PLAN: EXECUTIVE SUMMARY. ----------2414
3745-104-42 RISK MANAGEMENT PLAN: REGISTRATION. ----------2416
3745-104-43 RISK MANAGEMENT PLAN: OFFSITE CONSEQUENCE ANALYSIS.----------2419
3745-104-44 RISK MANAGEMENT PLAN: FIVE-YEAR ACCIDENT HISTORY. ----------2422
3745-104-45 RISK MANAGEMENT PLAN: PREVENTION PROGRAM/PROGRAM 2. ----------2424
3745-104-46 RISK MANAGEMENT PLAN: PREVENTION PROGRAM/PROGRAM THREE. ----------2427
3745-104-47 RISK MANAGEMENT PLAN: EMERGENCY RESPONSE PROGRAM.----------2430
3745-104-48 RISK MANAGEMENT PLAN: CERTIFICATION. ----------2432
3745-104-49 RISK MANAGEMENT PLAN: UPDATES AND REQUIRED CORRECTIONS.----------2434
3745-104-50 RECORDKEEPING. ----------2437
3745-104-51 AVAILABILITY OF INFORMATION TO THE PUBLIC. ----------2439
3745-104-52 PERMIT CONTENT AND AIR PERMITTING AUTHORITY OR DESIGNATED AGENCY REQUIREMENTS.----------2441
3745-104-53 FEES.----------2443

CHAPTER 3745-105: PATHOLOGICAL WASTE INCINERATORS ---------- 2445

3745-105-01 APPLICABILITY, DEFINITIONS, AND REFERENCE TO MATERIALS.----------2446
3745-105-02 EMISSION LIMITS.----------2450
3745-105-03 DESIGN PARAMETERS AND OPERATING RESTRICTIONS.----------2452
3745-105-04 MONITORING REQUIREMENTS.----------2455

3745-105-05 RECORDKEEPING. ----------2457
3745-105-06 COMPLIANCE AND PERFORMANCE TESTING REQUIREMENTS.----------2459

CHAPTER 3745-108: CLEAN AIR MERCURY RULES---------- 2462

CHAPTER 3745-109: CLEAN AIR INTERSTATE RULES (CAIR)---------- 2463

3745-109-01 CAIR NOX ANNUAL, CAIR SO2 AND CAIR NOX OZONE SEASON TRADING PROGRAMS DEFINITIONS AND GENERAL PROVISIONS. ----------2464
3745-109-02 CAIR DESIGNATED REPRESENTATIVE FOR CAIR NOX SOURCES. ----------2505
3745-109-03 CAIR NOX SOURCE PERMITS.----------2512
3745-109-04 CAIR NOX ALLOWANCE ALLOCATIONS. ----------2515
3745-109-05 CAIR NOX ALLOWANCE TRACKING SYSTEM. ----------2524
3745-109-06 CAIR NOX ALLOWANCE TRANSFERS. ----------2535
3745-109-07 CAIR NOX UNIT MONITORING AND REPORTING. ----------2538
3745-109-08 CAIR NOX OPT-IN UNITS.----------2550
3745-109-09 CAIR DESIGNATED REPRESENTATIVE FOR CAIR SO2 SOURCES. ----------2564
3745-109-10 CAIR SO2 SOURCE PERMITS. ----------2571
3745-109-11 CAIR SO2 ALLOWANCE TRACKING SYSTEM.----------2574
3745-109-12 CAIR SO2 ALLOWANCE TRANSFERS. ----------2587
3745-109-13 CAIR SO2 UNIT MONITORING AND REPORTING. ----------2591
3745-109-14 CAIR SO2 OPT-IN UNITS. ----------2603
3745-109-15 CAIR DESIGNATED REPRESENTATIVE FOR CAIR NOX OZONE SEASON SOURCES. ---------2616
3745-109-16 CAIR NOX OZONE SEASON SOURCE PERMITS. ----------2624
3745-109-17 CAIR NOX OZONE SEASON ALLOWANCE ALLOCATIONS.----------2627
3745-109-18 CAIR NOX OZONE SEASON ALLOWANCE TRACKING SYSTEM.----------2638
3745-109-19 CAIR NOX OZONE SEASON ALLOWANCE TRANSFERS. ----------2649
3745-109-20 CAIR NOX OZONE SEASON UNIT MONITORING AND REPORTING. ----------2652
3745-109-21 CAIR NOX OZONE SEASON OPT-IN UNITS. ----------2666

CHAPTER 3745-110: NITROGEN OXIDES - REASONABLE AVAILABLE CONTROL TECHNOLOGIES ---------- 2680

3745-110-01 DEFINITIONS.----------2681
3745-110-02 APPLICABILITY.----------2690
3745-110-03 RACT REQUIREMENTS AND/OR LIMITATIONS FOR EMISSIONS OF NOX FROM STATIONARY SOURCES. ----------2692
3745-110-04 COMPLIANCE DEADLINES.----------2708
3745-110-05 COMPLIANCE METHODS. ----------2711

CHAPTER 3745-111: ERC BANKING PROGRAM---------- 2713

3745-111-01 DEFINITIONS.----------2714
3745-111-02 ERC BANKING PROGRAM FOR THE PURPOSE OF ENABLING THE ACQUISITION OF OFFSETS.----------2718
3745-111-03 ERC GENERATION FOR THE PURPOSE OF ENABLING THE ACQUISITION OF OFFSETS. ------2721
3745-111-04 ERC TRANSFER AND USE FOR THE PURPOSE OF ENABLING THE ACQUISITION OF OFFSETS.----------2727
3745-111-05 ERC BANKING SYSTEM. ----------2731

CHAPTER 3745-112: CONSUMER PRODUCTS---------- 2734

3745-112-01 DEFINITIONS.----------2735
3745-112-02 APPLICABLITY.----------2763
3745-112-03 STANDARDS. ----------2765
3745-112-04 EXEMPTIONS.----------2772
3745-112-05 ADMINISTRATIVE REQUIREMENTS. ----------2777
3745-112-06 REPORTING REQUIREMENTS. ----------2782
3745-112-07 VARIANCES. ----------2785
3745-112-08 TEST METHODS.----------2787

CHAPTER 3745-113: ARCHITECTURAL AND INDUSTRIAL MAINTENANCE (AIM) COATINGS - 2790

3745-113-01 DEFINITIONS FOR ARCHITECTURAL AND INDUSTRIAL MAINTENANCE (AIM) COATINGS.----------2791
3745-113-02 APPLICABILITY.----------2803
3745-113-03 STANDARDS FOR ARCHITECTURAL AND INDUSTRIAL MAINTENANCE (AIM) COATINGS.---2805
3745-113-04 CONTAINER LABELING REQUIREMENTS.----------2811
3745-113-05 REPORTING REQUIREMENTS. ----------2814
3745-113-06 COMPLIANCE PROVISIONS AND TEST METHODS. ----------2816

CHAPTER 3745-114: TOXIC AIR CONTAMINANTS---------- 2819

3745-114-01 TOXIC AIR CONTAMINANTS.----------2820

Chapter 3745-14: Nitrogen Oxides - Budget Trading Program

Contact: Chris Beekman 614-644-3597
Chris.beekman@epa.ohio.gov

3745-14-01 **Definitions and general provisions.**

[Comment: For dates of non-regulatory government publications, publications of recognized organizations and associations, federal rules, and federal statutory provisions referenced in this rule, see paragraph (G) of this rule titled "referenced materials."]

(A) This chapter establishes the provisions and requirements to implement a NOx budget trading, portland cement kilns, and a stationary (large) internal combustion engines program in the state of Ohio as a means of control and reduction of NOx emissions. The director authorizes the administrator to assist the director in implementing the state NOx budget trading program as a participant in the federal NOx budget trading program by carrying out the functions set forth for the administrator in this chapter.

(B) Definitions.

(1) Except as otherwise provided in this rule, the definitions in rule 3745-15-01 of the Administrative Code shall apply to this chapter.

(2) As used in this rule and in rules 3745-14-02 to 3745-14-10 of the Administrative Code (pertaining to NOx budget trading program and other sources identified in paragraph (A) of this rule):

(a) "Account certificate of representation" means the completed and signed submission required by rule 3745-14-02 of the Administrative Code for certifying the designation of a NOx authorized account representative, for a NOx budget source or a group of identified NOx budget sources, who is authorized to represent the owners and operators of such source or sources and of the NOx budget units at such source or sources with regard to matters under the NOx budget trading program.

(b) "Account number" means the identification number given by the administrator to each NOx allowance tracking system account.

(c) "Acid Rain emissions limitation" means, as defined in 40 CFR 72.2, a limitation on emissions of sulfur dioxide or NOx under the acid rain program under Title IV of the Clean Air Act.

(d) "Administrator" means the administrator of the United States environmental protection agency or the administrator's duly authorized representative.

(e) "Allocate" or "allocation" means the determination by the director of the number of NOx allowances to be initially credited to a NOx budget unit or an allocation set-aside.

(f) "ASTM" means the "American Society for Testing and Materials," 100 Barr Harbor Drive, West Conshohocken, Pennsylvania.

(g) "Automated data acquisition and handling system" or "DAHS" means that component of the CEMS, or other emissions monitoring system approved for use under rule 3745-14-08 of the Administrative Code, designed to interpret and convert individual output signals from pollutant concentration monitors, flow monitors, diluent gas monitors, and other component parts of the monitoring system to produce a continuous record of the measured parameters in the measurement units required by rule 3745-14-08 of the Administrative Code.

(h) "Boiler" means an enclosed fossil or other fuel-fired combustion device used to produce heat and to transfer heat to recirculating water, steam, or other medium, excluding CO boilers associated with combusting CO from fluidized catalytic crackers at petroleum refineries.

(i) "Btu" means British thermal unit.

(j) "CAA" means the Clean Air Act as contained in 42 USC 7401 to 7671q.

(k) "CO" means carbon monoxide.

(l) "Combined cycle system" means a system comprised of one or more combustion turbines, heat recovery steam generators, and steam turbines configured to improve overall efficiency of electricity generation or steam production.

(m) "Combustion turbine" means an enclosed fossil or other fuel-fired device that is comprised of a compressor, a combustor, and a turbine, and in which the flue gas resulting from the combustion of fuel in the combustor passes through the turbine, rotating the turbine.

(n) "Commence commercial operation" means, with regard to a unit that serves a generator, to have begun to produce steam, gas, or other heated medium used to generate electricity for sale or use, including test generation. Except as provided in paragraph (C)(2) or (D) of this rule or rule 3745-14-09 of the Administrative Code, for a unit that is a NOx budget unit under paragraph (C)(1) of this rule on the date the unit commences commercial operation, such date shall remain the unit's date of commencement of commercial operation even if the unit is subsequently modified, reconstructed, or repowered. Except as provided in paragraph (C)(2) or (D) of this rule or rule 3745-14-09 of the Administrative Code, for a unit that is not a NOx budget unit under paragraph (C)(1) of this rule on the date the unit commences commercial operation, the date the unit becomes a NOx budget unit under paragraph (C)(1) of this rule shall be the unit's date of commencement of commercial operation.

(o) "Commence operation" means to have begun any mechanical, chemical, or electronic process, including, with regard to a unit, start-up of a unit's combustion chamber. Except as provided in paragraph (C)(2) or (D) of this rule or rule 3745-14-09 of the Administrative Code, for a unit that is

a NOx budget unit under paragraph (C)(1) of this rule on the date of commencement of operation, such date shall remain the unit's date of commencement of operation even if the unit is subsequently modified, reconstructed, or repowered. Except as provided in paragraph (C)(2) or (D) of this rule or rule 3745-14-09 of the Administrative Code, for a unit that is not a NOx budget unit under paragraph (C)(1) of this rule on the date of commencement of operation, the date the unit becomes a NOx budget unit under paragraph (C)(1) of this rule shall be the unit's date of commencement of operation.

(p) "Common stack" means a single flue through which emissions from two or more units are exhausted.

(q) "Compliance account" means a NOx allowance tracking system account, established by the administrator for a NOx budget unit under rule 3745-14-06 of the Administrative Code in which the NOx allowance allocations for the unit are initially recorded and in which are held NOx allowances available for use by the unit for a control period for the purpose of meeting the unit's NOx budget emission limitation.

(r) "Continuous emission monitoring system" or "CEMS" means the equipment required under rule 3745-14-08 of the Administrative Code to sample, analyze, measure, and provide, by readings taken at least once every fifteen minutes (using an automated DAHS, a permanent record of NOx emissions, stack gas volumetric flow rate or stack gas moisture content (as applicable), in a manner consistent with rule 3745-14-08 of the Administrative Code. The following are the principal types of continuous emission monitoring systems required under rule 3745-14-08 of the Administrative Code and 40 CFR Part 75:

(i) A flow monitoring system, consisting of a stack flow rate monitor and an automated DAHS. A flow monitoring system provides a permanent, continuous record of stack gas volumetric flow rate, in units of standard cubic feet per hour (scfh).

(ii) A NOx concentration monitoring system, consisting of a NOx pollutant concentration monitor and an automated DAHS. A NOx concentration monitoring system provides a permanent, continuous record of NOx emissions in units of parts per million (ppm).

(iii) A NOx emission rate (or NOx-diluent) monitoring system, consisting of a NOx pollutant concentration monitor, a diluent gas (carbon dioxide or oxygen) monitor, and an automated DAHS. A NOx concentration monitoring system provides a permanent, continuous record of: NOx concentration in units of parts per million, diluent gas concentration in units of percent carbon dioxide or oxygen, and NOx emission rate in units of pounds per mmBtu.

(iv) A moisture monitoring system, as defined in 40 CFR 75.11(b)(2). A moisture monitoring system provides a permanent, continuous record of the stack gas moisture content, in units of per cent water.

(s) "Control period" means the period beginning May first of a year and ending on September thirtieth of the same year, inclusive.

(t) "DAHS" means data acquisition and handling system.

(u) "Director" means the director of the Ohio environmental protection agency.

(v) "Electricity for sale under firm contract to the grid" means electricity for sale where the capacity involved is intended to be available at all times during the period covered by a guaranteed commitment to deliver, even under adverse conditions.

(w) "Emissions" means air pollutants exhausted from a unit or source into the atmosphere, as measured, recorded, and reported to the Administrator by the NOx authorized account representative and as determined by the Administrator in accordance with rule 3745-14-08 of the Administrative Code.

(x) "Energy efficiency/renewable energy project" means any project that, during the control period, reduces end-use demand for electricity, including demand-side management practices, or displace electrical energy utilization through the use of wind power, solar power, biomass or landfill methane generation.

(y) "Energy information administration" means the energy information administration of the United States department of energy.

(z) "Excess emissions" means any tonnage of NOx emitted by a NOx budget unit during a control period that exceeds the NOx budget emissions limitation for the unit.

(aa) "Fossil fuel" means natural gas, petroleum, coal, or any form of solid, liquid, or gaseous fuel derived from such material.

(bb) "Fossil fuel-fired" means, with regard to a unit:

(i) For units that commenced operation before January 1, 1996, the combustion of fossil fuel, alone or in combination with any other fuel, where fossil fuel actually combusted comprises more than fifty per cent of the annual heat input, on a Btu basis, during 1995, or, if a unit had no heat input in 1995, during the last year of operation of the unit prior to 1995;

(ii) For units that commenced operation on or after January 1, 1996 and before January 1, 1997, the combustion of fossil fuel, alone or in combination with any other fuel, where fossil fuel actually

combusted comprises more than fifty per cent of the annual heat input, on a Btu basis, during 1996; or

(iii) For units that commence operation on or after January 1, 1997:

(a) The combustion of fossil fuel, alone or in combination with any other fuel, where fossil fuel actually combusted comprises more than fifty per cent of the annual heat input, on a Btu basis, during any year; or

(b) The combustion of fossil fuel, alone or in combination with any other fuel, where fossil fuel is projected to comprise more than fifty per cent of the annual heat input, on a Btu basis, during any year, provided that the unit shall be "fossil fuel-fired" as of the date, during such year, on which the unit begins combusting fossil fuel.

(cc) "General account" means a NOx allowance tracking system account, established under rule 3745-14-06 of the Administrative Code, that is not a compliance account or an overdraft account.

(dd) "Generator" means a device that produces electricity.

(ee) "Heat input" means the product (in mmBtu per time) of the gross calorific value of the fuel (in mmBtu per pound) and the fuel feed rate into a combustion device (in pounds of fuel per time), as measured, recorded, and reported to the director by the NOx authorized account representative and as determined by the director in accordance with rule 3745-14-08 of the Administrative Code, and does not include the heat derived from preheated combustion air, recirculated flue gases, or exhaust from other sources.

(ff) "Heat input rate" means the amount of heat input (in mmBtu) divided by unit operating time (in hours) or, with regard to a specific fuel, the amount of heat input attributed to the fuel (in mmBtu) divided by the unit operating time (in hours) during which the unit combusts the fuel.

(gg) "Innovative technology project" means any project utilizing technology that has not been adequately demonstrated in practice, but that would have a substantial likelihood of reducing NOx emissions compared to current practices. An innovative technology project could include technology to decrease electrical energy or fuel use either in stationary or mobile sources.

(hh) "Life-of-the-unit, firm power contractual arrangement" means a unit participation power sales agreement under which a utility or industrial customer reserves, or is entitled to receive, a specified amount or percentage of nameplate capacity and associated energy from any specified unit and pays its proportional amount of such unit's total costs, pursuant to a contract:

(i) For the life of the unit; or

(ii) For a cumulative term of no less than thirty years, including contracts that permit an election for early termination; or

(iii) For a period equal to or greater than twenty-five years or seventy per cent of the economic useful life of the unit determined as of the time the unit is built, with option rights to purchase or release some portion of the nameplate capacity and associated energy generated by the unit at the end of the period.

(ii) "Maximum design heat input" means the ability of a unit to combust a stated maximum amount of fuel per hour on a steady state basis, as determined by the physical design and physical characteristics of the unit.

(jj) "Maximum potential hourly heat input" means an hourly heat input used for reporting purposes when a unit lacks certified monitors to report heat input. If the unit intends to use Appendix D of 40 CFR Part 75 to report heat input, this value must be calculated, in accordance with 40 CFR Part 75, using the maximum fuel flow rate and the maximum gross calorific value. If the unit intends to use a flow monitor and a diluent gas monitor, this value must be reported, in accordance with 40 CFR Part 75, using the maximum potential flow rate and either the maximum carbon dioxide concentration (in per cent carbon dioxide) or the minimum oxygen concentration (in per cent oxygen).

(kk) "Maximum potential NOx emission rate" means the emission rate of NOx (in pounds per mmBtu) calculated in accordance with Section 3 of Appendix F of 40 CFR Part 75, using the maximum potential concentration of NOx as defined in Section 2 of Appendix A of 40 CFR Part 75, and either the maximum oxygen concentration (in per cent oxygen) or the minimum carbon dioxide concentration (in per cent carbon dioxide), under all operating conditions of the unit except for unit start up, shutdown, and upsets.

(ll) "Maximum rated hourly heat input" means a unit-specific maximum hourly heat input (mmBtu) which is the higher of the manufacturer's maximum rated hourly heat input or the highest observed hourly heat input.

(mm) "mmBtu" means million. British thermal unit.

(nn) "MWe" means megawatt electrical.

(oo) "Monitoring system" means any monitoring system that meets the requirements of rule 3745-14-08 of the Administrative Code, including a continuous emissions monitoring system, an excepted monitoring system, or an alternative monitoring system.

(pp) "Most stringent state or federal NOx emissions limitation" means the lowest NOx emission limitation (in pounds per mmBtu) that is applicable to the unit under state or federal law, regardless of the averaging period to which the emissions limitation applies.

(qq) "Nameplate capacity" means the maximum electrical generating output (in MWe) that a generator can sustain over a specified period of time when not restricted by seasonal or other deratings as measured in accordance with the United States department of energy standards.

(rr) "Non-Title V permit" means a federally enforceable permit administered by the director pursuant to the Clean Air Act and regulatory authority under the Clean Air Act, other than Title V of the Clean Air Act and Chapter 3745-77 of the Administrative Code.

(ss) "NOx" means all oxides of nitrogen which are determined to be ozone precursors, including, but not limited to, nitrogen oxide and nitrogen dioxide, but excluding nitrous oxide.

(tt) "NOx allowance" means a limited authorization by the director or the Administrator under the NOx budget trading program to emit up to one ton of NOx during the control period of the specified year or of any year thereafter, except as provided under paragraph (E)(6) of rule 3745-14-06 of the Administrative Code. No provision of the NOx budget trading program, the NOx budget permit application, the NOx budget permit, or an exemption under paragraph (C)(2)(a) or (D) of this rule and no provision of law shall be construed to limit the authority of the United States to terminate or limit such authorization, which does not constitute a property right. For purposes of this chapter, except paragraph (B), (C) or (D) of rule 3745-14-05 of the Administrative Code or paragraph (I) of rule 3745-14-09 of the Administrative Code, "NOx allowance" also includes an authorization to emit up to one ton of NOx during the control period of the specified year or of any year thereafter by the state or the Administrator in accordance with a state NOx budget trading program established, and approved and administered by the Administrator, pursuant to 40 CFR 51.121 or in accordance with the NOx budget trading program established by the Administrator in accordance with 40 CFR 52.34.

(uu) "NOx allowance deduction" or "deduct NOx allowances" means the permanent withdrawal of NOx allowances by the administrator from a NOx allowance tracking system compliance account or overdraft account to account for the number of tons of NOx emissions from a NOx budget unit for a control period, determined in accordance with rules 3745-14-06 and 3745-14-08 of the Administrative Code, or for any other allowance surrender obligation under this chapter.

(vv) "NOx allowances held" or "hold NOx allowances" means the NOx allowances recorded by the administrator, or submitted to the

administrator for recordation, in accordance with rule 3745-14-06 of the Administrative Code, in a NOx allowance tracking system account.

(ww) "NOx allowance tracking system" means the system by which the administrator records allocations, deductions, and transfers of NOx allowances under the NOx budget trading program.

(xx) "NOx allowance tracking system account" means an account in the NOx allowance tracking system established by the administrator for purposes of recording the allocation, holding, transferring, or deducting of NOx allowances.

(yy) "NOx allowance transfer deadline" means midnight of November thirtieth or, if November thirtieth is not a business day, midnight of the first business day thereafter and is the deadline by which NOx allowances may be submitted for recordation in a NOx budget unit's compliance account, or the overdraft account of the source where the unit is located, in order to meet the unit's NOx budget emissions limitation for the control period immediately preceding such deadline.

(zz) "NOx authorized account representative" means, for a NOx budget source or NOx budget unit at the source, the natural person who is authorized by the owners and operators of the source and all NOx budget units at the source, in accordance with rule 3745-14-02 of the Administrative Code, to represent and legally bind each owner and operator in matters pertaining to the NOx budget trading program or, for a general account, the natural person who is authorized, in accordance with rule 3745-14-06 of the Administrative Code, to transfer or otherwise dispose of NOx allowances held in the general account.

(aaa) "NOx budget emissions limitation" means, for a NOx budget unit, the tonnage equivalent of the NOx allowances available for compliance deduction for the unit under paragraphs (E)(1), (E)(2), (E)(5) and (E)(6) of rule 3745-14-06 of the Administrative Code in a control period adjusted by deductions of such NOx allowances to account for actual heat input under paragraph (C)(5) of rule 3745-14-05 of the Administrative Code for the control period, or to account for excess emissions for a prior control period under paragraph (E)(4) of rule 3745-14-06 of the Administrative Code, or to account for withdrawal from the NOx budget trading program or for a change in regulatory status, of a NOx budget opt-in unit under paragraph (G) or (H) of rule 3745-14-09 of the Administrative Code.

(bbb) "NOx budget opt-in permit" means a NOx budget permit covering a NOx budget opt-in unit.

(ccc) "NOx budget opt-in unit" means a unit that has been elected to become a NOx budget unit under the NOx budget trading program and whose NOx budget opt-in permit has been issued and is in effect under rule 3745-14-09 of the Administrative Code.

(ddd) "NOx budget permit" means the legally binding and federally enforceable written document, or portion of such document, issued by the director, including any permit revisions, specifying the NOx budget trading program requirements applicable to a NOx budget source, to each NOx budget unit at the NOx budget source, and to the owners and operators and the NOx authorized account representative of the NOx budget source and each NOx budget unit.

(eee) "NOx budget source" means a source that includes one or more NOx budget units.

(fff) "NOx budget trading program" means a multi-state NOx air pollution control and emission reduction program approved and administered by the Administrator pursuant to 40 CFR 51.121 or established by the Administrator pursuant to 40 CFR 52.34, as a means of mitigating the interstate transport of ozone and NOx.

(ggg) "NOx budget unit" means a unit that is subject to the NOx emissions limitation under paragraph (C) of this rule or paragraph (A) of rule 3745-14-09 of the Administrative Code.

(hhh) "Operating" means, with regard to a unit under paragraph (C)(1)(d)(ii) of rule 3745-14-03 or paragraph (A) of rule 3745-14-09 of the Administrative Code, having documented heat input for more than eight hundred seventy-six hours in the six months immediately preceding the submission of an application for an initial NOx budget permit under paragraph (D)(1) of rule 3745-14-09 of the Administrative Code. The unit's documented heat input shall be determined in accordance with 40 CFR Part 75 if the unit was otherwise subject to the requirements of 40 CFR Part 75 during that six-month period or shall be based on the best available data reported to the director for the unit if the unit was not otherwise subject to the requirements of 40 CFR Part 75 during that six-month period.

(iii) "Operator" means any person who operates, controls, or supervises a NOx budget unit, a NOx budget source, or unit for which an application for a NOx budget opt-in permit under paragraph (D) of rule 3745-14-09 of the Administrative Code is submitted and not denied or withdrawn and shall include, but not be limited to, any holding company, utility system, or plant manager of such a unit or source.

(jjj) "Opt-in" means to be elected to become a NOx budget unit under the NOx budget trading program through a final, effective NOx budget opt-in permit under rule 3745-14-09 of the Administrative Code.

(kkk) "Overdraft account" means the NOx allowance tracking system account, established by the administrator under rule 3745-14-06 of the Administrative Code, for each NOx budget source where there are two or more NOx budget units.

(lll) "Owner" means any of the following persons:

(i) Any holder of any portion of the legal or equitable title in a NOx budget unit or in a unit for which an application for a NOx budget opt-in permit under paragraph (D) of rule 3745-14-09 of the Administrative Code submitted and not denied or withdrawn; or

(ii) Any holder of a leasehold interest in a NOx budget unit or in a unit for which an application for a NOx budget opt-in permit under paragraph (D) of rule 3745-14-09 of the Administrative Code is submitted and not denied or withdrawn; or

(iii) Any purchaser of power from a NOx budget unit or from a unit for which an application for a NOx budget opt-in permit under paragraph (D) of rule 3745-14-09 of the Administrative Code is submitted and not denied or withdrawn under a life-of-the-unit, firm power contractual arrangement (however, unless expressly provided for in a leasehold agreement, owner shall not include a passive lessor, or a person who has an equitable interest through such lessor, whose rental payments are not based, either directly or indirectly, upon the revenues or income from the NOx budget unit or the unit for which an application for a NOx budget opt-in permit under paragraph (D) of rule 3745-14-09 of the Administrative Code is submitted and not denied or withdrawn); or

(iv) With respect to any general account, any person who has an ownership interest with respect to the NOx allowances held in the general account and who is subject to the binding agreement for the NOx authorized account representative to represent that person's ownership interest with respect to the NOx allowances.

(mmm) "Per cent monitor data availability" means, for purposes of paragraph (D)(1) of rule 3745-14-05 and paragraph (E)(2) of rule 3745-14-09 of the Administrative Code, total unit operating hours for which quality-assured data were recorded in accordance with rule 3745-14-08 of the Administrative Code in a control period divided by the total number of unit operating hours in the control period, and multiplied by one hundred per cent.

(nnn) "Potential electrical output capacity" means thirty three per cent of a unit's maximum design heat input.

(ooo) "Receive" or "receipt of" means, when referring to the director or the administrator, to come into possession of a document, information, or correspondence (whether sent in writing or by authorized electronic transmission), as indicated in an official correspondence log, or by a notation made on the document, information, or correspondence, by the director or the Administrator in the regular course of business.

(ppp) "Recordation," "record," or "recorded" means, with regard to NOx allowances, the movement of NOx allowances by the administrator from one NOx allowance tracking system account to another, for purposes of allocation, transfer, or deduction.

(qqq) "Reference method" means any direct test method of sampling and analyzing for an air pollutant as specified in Appendix A of 40 CFR Part 60.

(rrr) "Serial number" means, when referring to NOx allowances, the unique identification number assigned to each NOx allowance by the administrator, under paragraph (D)(3) of rule 3745-14-06 of the Administrative Code.

(sss) "Source" means any governmental, institutional, commercial, or industrial structure, installation, plant, building, or facility that emits or has the potential to emit any regulated air pollutant under the Clean Air Act. For purposes of Section 502(c) of the Clean Air Act, a source, including a source with multiple units, shall be considered a single facility.

(ttt) "State" means one of the forty-eight contiguous states or a portion thereof or the District of Columbia that is subject to a NOx budget trading program under Section 110(c) or Section 126 of the Clean Air Act.

(uuu) "State trading program budget" means the total number of NOx tons apportioned to all NOx budget units in the state, in accordance with the NOx budget trading program, for use in a given control period.

(vvv) "Submit" or "serve" means to send or transmit a document, information, or correspondence to the person specified in accordance with the applicable regulation:

(i) In person;

(ii) By United States postal service; or

(iii) By other means of dispatch or transmission and delivery.

Compliance with any submission, service, or mailing deadline shall be determined by the date of dispatch, transmission, or mailing and not the date of receipt.

(www) "Title V operating permit" means a permit issued under Chapter 3745-77 of the Administrative Code.

(xxx) "Title V operating permit regulations" means Chapters 3745-77 and 3745-78 of the Administrative Code.

(yyy) "Ton" or "tonnage" means any "short ton" (i.e., two thousand pounds). For the purpose of determining compliance with the NOx budget

emissions limitation, total tons for a control period shall be calculated as the sum of all recorded hourly emissions (or the tonnage equivalent of the recorded hourly emissions rates) in accordance with rule 3745-14-08 of the Administrative Code, with any remaining fraction of a ton equal to or greater than 0.50 ton deemed to equal one ton and any fraction of a ton less than 0.50 ton deemed to equal zero tons.

(zzz) "Unit" means a fossil fuel-fired stationary boiler, combustion turbine, or combined cycle system.

(aaaa) "Unit operating day" means a calendar day in which a unit combusts any fuel.

(bbbb) "Unit operating hour" or "hour of unit operation" means any hour (or fraction of an hour) during which a unit combusts any fuel.

(cccc) "Utilization" means the heat input (expressed in mmBtu/time) for a unit. The unit's total heat input for the control period in each year shall be determined in accordance with 40 CFR Part 75 if the NOx budget unit was otherwise subject to the requirements of 40 CFR Part 75 for the year, or shall be based on the best available data reported to the administrator for the unit if the unit was not otherwise subject to the requirements of 40 CFR Part 75 for the year.

(3) As used in rule 3745-14-11 of the Administrative Code (pertaining to NOx budget program requirements for portland cement manufacturing):

(a) "Clinker" means the product of a portland cement kiln from which finished cement is manufactured by milling and grinding.

(b) "Long dry kiln" means a kiln fourteen feet or larger in diameter, four hundred feet or greater in length, which employs no preheating of the feed. The inlet feed to the kiln is dry.

(c) "Long wet kiln" means a kiln fourteen feet or larger in diameter, four hundred feet or greater in length, which employs no preheating of the feed. The inlet feed to the kiln is a slurry.

(d) "Low-NOx burners" means combustion equipment designed to reduce flame turbulence, delay fuel/air mixing, and establish fuel-rich zones for initial combustion.

(e) "Malfunction" means any sudden, infrequent, and not reasonably preventable failure of air pollution control equipment, process equipment, or a process to operate in a normal or usual manner. Failures that are caused in part by poor maintenance or careless operation are not malfunctions.

(f) "Mid-kiln system firing" means the secondary firing in kilns by injecting solid fuel at an intermediate point in the kiln system using a specially

designed feed injection mechanism for the purpose of decreasing NOx emissions through:

(i) Burning part of the fuel at a lower temperature; and

(ii) Reducing conditions at the solid fuel injection point that may destroy some of the NOx formed upstream in the kiln burning zone.

(g) "Portland cement" means a hydraulic cement produced by pulverizing clinker consisting essentially of hydraulic calcium silicates, usually containing one or more of the forms of calcium sulfate as an interground addition.

(h) "Portland cement kiln" means a system, including any solid, gaseous or liquid fuel combustion equipment, used to heat, calcine and fuse raw materials, including limestone and clay, to produce portland cement clinker.

(i) "Precalciner kiln" means a kiln system where the feed to the kiln is preheated in cyclone chambers which utilize a second burner to calcine material in a separate vessel attached to the preheater prior to the final fusion in a kiln which forms clinker.

(j) "Preheater kiln" means a kiln system where the feed to the kiln is preheated in cyclone chambers prior to the final fusion in a kiln which forms clinker.

(k) "Shutdown" means the cessation of operation of a portland cement kiln for any purpose.

(l) "Startup" means the setting in operation of a portland cement kiln for any purpose.

(4) As used in rule 3745-14-12 of the Administrative Code (pertaining to NOx budget program requirements for stationary internal combustion engines):

(a) “Affected engine” means any stationary internal combustion engine that is a large NOx SIP call engine, or other stationary internal combustion engine that is subject to NOx control under a compliance plan established pursuant to paragraph (B) of rule 3745-14-12 of the Administrative Code.

(b) “Engine seasonal NOx 2007 tonnage reduction” means the year 2007 control period NOx emissions reductions value for a large NOx SIP call engine which is calculated as the difference between the 2007 base NOx emissions and the 2007 budget NOx emissions contained in the NOx SIP call engine inventory. The total engine seasonal NOx 2007 tonnage reduction for all large NOx SIP call engines in Ohio is 2730 tons.

(c) "Facility seasonal NOx 2007 tonnage reduction" means the total of the engine seasonal NOx 2007 tonnage reductions attributable to all of an owner/operator's large NOx SIP call engines.

(d) "Large NOx SIP call engine" means a stationary internal combustion engine identified and designated as "large" in the NOx SIP call engine inventory (as defined in paragraph (B)(4)(e) of this rule) as emitting more than one ton of NOx emissions per average control period day in 1995.

(e) "NOx SIP call engine inventory" means the inventory of internal combustion engines compiled by the United States environmental protection agency as part of the NOx SIP call rule, including the Federal Register notice entitled "Technical Amendment to the Finding of Significant Contribution and Rulemaking for Certain States for Purposes of Reducing Regional Transport of Ozone," and the adjustment of the 2007 budget NOx control efficiency to eighty-two per cent for large gas-fired engines discussed in the Federal Register notice entitled "Interstate Ozone Transport: Response to Court Decisions on the NOX SIP Call, NOX SIP Call Technical Amendments, and Section 126 Rules."

(f) "Past NOx emission rate" means the emission rate of an affected engine in grams per brake horsepower-hour as determined by performance testing consistent with the requirements of 40 CFR Part 60, Appendix A. Where such performance test data are not available, the appropriate past NOx emission rate shall be evaluated and approved or denied by the director on a case-by-case basis using, for example, appropriate emission factors or data from the NOx SIP call engine inventory. For large NOx SIP call engines, the past NOx emission rate is the uncontrolled emission rate.

(g) "Projected operating hours" means the projected actual number of hours of operation per control period for an affected engine.

(h) "Projected NOx emission rate" means the projected emission rate in grams per brake horsepower-hour after installation of controls on an affected engine.

(i) "Stationary internal combustion engine" means any internal combustion engine of the reciprocating type that is either attached to a foundation at a facility or is designed to be capable of being carried or moved from one location to another and remains at a single site at a building, structure, facility, or installation for more than twelve consecutive months. Any engine (or engines) that replaces an engine at a site that is intended to perform the same or similar function as the engine replaced is included in calculating the consecutive time period.

(C) Applicability.

(1) The following units shall be NOx budget units, and any source that includes one or more such units shall be a NOx budget source, subject to the requirements of this chapter:

(a) For EGUs:

(i) For units, other than cogeneration units, that commenced operation before January 1, 1997, a unit serving during 1995 or 1996 a generator that had a nameplate capacity greater than twenty-five MWe and produced electricity for sale under a firm contract to the electric grid;

(ii) For units, other than cogeneration units, that commenced operation on or after January 1, 1997 and before January 1, 1999, a unit serving during 1997 or 1998 a generator that had a nameplate capacity greater than twenty-five MWe and produced electricity for sale under a firm contract to the electric grid; and

(iii) For units, other than cogeneration units, that commence operation on or after January 1, 1999, a unit serving at any time a generator that has a nameplate capacity greater than twenty-five MWe and produces electricity for sale.

(iv) For cogeneration units:

(a) For units commencing operation before January 1, 1997, a unit serving during 1995 or 1996 a generator with a nameplate capacity greater than twenty-five MWe and failing to qualify as an unaffected unit under 40 CFR 72.6(b)(4) for 1995 or 1996 under the "Acid Rain Program;"

(b) For units commencing operation in 1997 or 1998, a unit serving during 1997 or 1998 a generator with a nameplate capacity grater than twenty-five MWe and failing to qualify as an unaffected unit under 40 CFR 72.6(b)(4) for 1997 or 1998 under the "Acid Rain Program;"

(c) For units commencing operation on or after January 1, 1999, a unit serving at any time a generator with a nameplate capacity greater than twenty-five MWe and failing to qualify as an unaffected unit under 40 CFR 72.6(b)(4) under the "Acid Rain Program" for any year.

(b) For non-EGUs:

(i) For units, other than cogeneration units, that commenced operation before January 1, 1997, a unit that has a maximum design heat input greater than two hundred fifty mmBtu per hour and that did not serve during 1995 or 1996 a generator producing electricity for sale under a firm contract to the electric grid;

(ii) For units, other than cogeneration units, that commenced operation on or after January 1, 1997 and before January 1, 1999, a unit that has a maximum design heat input greater than two hundred fifty mmBtu per hour and that did not serve during 1997 or 1998 a generator producing electricity for sale under a firm contract to the electric grid;

(iii) For units, other than cogeneration units, that commence operation on or after January 1, 1999, a unit with a maximum design heat input greater than two hundred fifty mmBtu per hour that:

(a) At no time serves a generator producing electricity for sale; or

(b) At any time serves a generator producing electricity for sale, if any such generator has a nameplate capacity of twenty-five MWe or less and has the potential to use no more than fifty per cent of the potential electrical output capacity of the unit.

(iv) For cogeneration units:

(a) For units commencing operation before January 1, 1997, a unit with a maximum design heat input greater than two hundred fifty mmBtu per hour and qualifying as an unaffected unit under 40 CFR 72.6(b)(4) under the "Acid Rain Program" for 1995 and 1996;

(b) For units commencing operation in 1997 or 1998, a unit with a maximum design heat input greater than two hundred fifty mmBtu per hour and qualifying as an unaffected unit under 40 CFR 72.6(b)(4) under the "Acid Rain Program" for 1997 and 1998;

(c) For units commencing on or after January 1, 1999, a unit with a maximum design heat input greater than two hundred fifty mmBtu per hour and qualifying as an unaffected unit under 40 CFR 72.6(b)(4) under the "Acid Rain Program" for each year.

(2) The following units shall be exempt from the requirements of the NOx budget trading program:

(a) Any unit to which Chapter 3745-109 of the Administrative Code applies.

[Comment: The above exemption applies to units under paragraph (C)(1) of this rule or units under paragraph (A) of rule 3745-14-09 of the Administrative Code, for any ozone season to which 40 CFR 51.121(r) applies. Ohio EPA is inserting this language because the United States environmental protection agency will not administer the NOx SIP Call trading program after 2008 (see 40 CFR 51.121(r)). In order to continue to meet the Ohio's NOx SIP Call obligations, Ohio has chosen to expand the applicability of Ohio's CAIR program as it pertains to the CAIR ozone season rules (rules 3745-109-01 and 3745-109-15 to 3745-109-21

of the Administrative Code) to cover all units that would otherwise be covered by Ohio's NOx SIP Call trading program (see 40 CFR 51.123(bb)(1) and (3)).

The federal CAIR program was vacated by the D.C. circuit court of appeals on July 11, 2008. The court then remanded, without vacatur, the federal CAIR program on December 23, 2008 allowing the full operation of the federal CAIR program and Ohio's CAIR program beginning with the January 1, 2009 control period. The court's remand requires the United States environmental protection agency to provide for remedy of certain flaws identified by the court in the original vacatur. An effective federal CAIR trading program is necessary for the operation of Ohio's CAIR program. Should the United States environmental protection agency eliminate or suspend the CAIR program, units under paragraph (C)(1) of this rule or units under paragraph (A) of rule 3745-14-09 of the Administrative Code would need to meet the requirements of this chapter following the elimination or suspension of the federal CAIR program, provided that 40 CFR 51.121(r) no longer applies and the Administrator will carry out the functions set forth for the administrator in this chapter.]

(b) A unit under paragraph (C)(1) of this rule that has a federally enforceable permit that includes a NOx emission limitation restricting NOx emissions during a control period to twenty-five tons or less and restricts the unit to burning only natural gas or fuel oil during a control period in 2004 or later and that includes the special provisions in paragraph (C)(2)(e) of this rule shall be exempt from the requirements of the NOx budget trading program, except for the provisions of this paragraph, paragraphs (B), (C)(1) and (F) of this rule and rules 3745-14-05 to 3745-14-07 of the Administrative Code. The NOx emission limitation under this paragraph shall restrict NOx emissions during the control period by one of the following methods:

(i) A restriction on unit operating hours calculated by dividing the federally enforceable emission limitation, in tons, determined in accordance with paragraph (C)(2)(b) of this rule, by the unit's maximum potential hourly NOx mass emissions, which shall equal the unit's maximum rated hourly heat input multiplied by the highest default NOx emission rate applicable to the unit under 40 CFR 75.19(c), Table LM-2; or

(ii) A restriction on unit fuel usage calculated by dividing the federally enforceable emission limitation, in tons, determined in accordance with paragraph (C)(2)(b) of this rule, by the product of the heat value of the fuel to be used multiplied by the default NOx emission rate for the fuel to be used as specified in 40 CFR 75.19(c), Table LM-2.

(c) The exemption under paragraph (C)(2)(b) of this rule shall become effective as follows:

(i) The exemption shall become effective on the date on which the NOx emission limitation and the special provisions in the permit under paragraph (C)(2)(b) of this rule become final; or

(ii) If the NOx emission limitation and the special provisions in the permit under paragraph (C)(2)(b) of this rule become final during a control period and after the first date on which the unit operates during such control period, then the exemption shall become effective on May first of such control period, provided that such NOx emission limitation and the special provisions apply to the unit as of such first date of operation. If such NOx emission limitation and special provisions do not apply to the unit as of such first date of operation, then the exemption under paragraph (C)(2)(b) of this rule shall become effective on October first of the year during which such NOx emission limitation and the special provisions become final.

(d) The director shall provide the Administrator written notice of the issuance of any permit under paragraph (C)(2)(b) of this rule and, upon request, a copy of the permit.

(e) The following special provisions apply to units exempt under paragraph (C)(2)(b) of this rule.

(i) A unit exempt under paragraph (C)(2)(b) of this rule shall comply with the restriction on unit operating hours and fuel use described in paragraph (C)(2)(b) of this rule during the control period in each year.

(ii) NOx allowances shall be allocated to the unit in accordance with paragraphs (B)(1) to (B)(3) and (C)(1) to (C)(3) of rule 3745-14-05 of the Administrative Code. For each control period for which the unit is allocated NOx allowances under this paragraph:

(a) The owners and operators of the unit must specify a general account, in which the administrator will record the NOx allowances; and

(b) After the administrator records a NOx allowance allocation under paragraphs (B)(1) to (B)(3) and (C)(1) to (C)(3) of rule 3745-14-05 of the Administrative Code, the administrator will deduct, from the general account under paragraph (C)(2)(e)(ii)(a) of this rule, NOx allowances that are allocated for the same or a prior control period as the NOx allowances allocated to the unit under paragraphs (B)(1) to (B)(3) and (C)(1) to (C)(3) of rule 3745-14-05 of the Administrative Code and that equal the NOx emission limitation (in tons of NOx) on which the unit's exemption under paragraph (C)(2)(b) of this rule is based. The NOx authorized

account representative shall ensure that such general account contains the NOx allowances necessary for completion of such deduction.

(iii) A unit exempt under paragraph (C)(2)(b) of this rule shall report hours of unit operation or fuel usage during the control period in each year to the director by November first of that year.

(iv) For a period of five years from the date the records are created, the owners and operators of a unit exempt under paragraph (C)(2)(b) of this rule shall retain, at the source that includes the unit, records demonstrating that the conditions of the federally enforceable permit under paragraph (C)(2)(b) of this rule were met, including the restrictions on unit operating hours and fuel usage. The five-year period for keeping records may be extended for cause, at any time prior to the end of the period, in writing by the director or the administrator. The owners and operators bear the burden of proof that the unit met the restriction on unit operating hours and fuel use.

(v) The owners and operators and, to the extent applicable, the NOx authorized account representative of a unit exempt under paragraph (C)(2)(b) of this rule shall comply with the requirements of the NOx budget trading program concerning all periods for which the exemption is not in effect, even if such requirements arise, or must be complied with, after the exemption takes effect.

(vi) On the earlier of the following dates, a unit exempt under paragraph (C)(2)(b) of this rule shall lose its exemption:

(a) The date on which the restriction on unit operating hours and fuel use described in paragraph (C)(2)(b) of this rule is removed from the unit's federally enforceable permit or otherwise becomes no longer applicable to any control period starting in 2004; or

(b) The first date on which the unit fails to comply, or with regard to which the owners and operators fail to meet their burden of proving that the unit is complying, with the restriction on unit operating hours and fuel use described in paragraph (C)(2)(b) of this rule during any control period starting in 2004.

(vii) A unit that loses its exemption in accordance with paragraph (C)(2)(e)(vi) of this rule shall be subject to the requirements of this chapter. For the purpose of applying permitting requirements under rule 3745-14-03 of the Administrative Code, allocating allowances under rule 3745-14-05 of the Administrative Code, and applying monitoring requirements under rule 3745-14-08 of the Administrative Code, the unit shall be treated as commencing operation and, if the unit is covered by paragraph (C)(1)(b) of this

rule, commencing commercial operation on the date the unit loses its exemption.

(viii) A unit that is exempt under paragraph (C)(2)(b) of this rule is not eligible to be a NOx budget opt-unit under rule 3745-14-09 of the Administrative Code.

(D) Retired unit exemption.

(1) This rule applies to any NOx budget unit, other than a NOx budget opt-in unit, that is permanently retired.

(2) Standard provisions.

(a) Any NOx budget unit, other than a NOx budget opt-in unit, that is permanently retired shall be exempt from the NOx budget trading program, except for the provisions of this rule and rules 3745-14-05 to 3745-14-07 of the Administrative Code.

(b) The exemption under paragraph (D)(2)(a) of this rule shall become effective the day on which the unit is permanently retired. Within thirty days of permanent retirement, the NOx authorized account representative of the unit shall submit a statement to the director. A copy of the statement shall be submitted to the administrator. The statement shall state (in a format prescribed by the director) that the unit is permanently retired and will comply with the requirements of paragraph (D)(3) of this rule.

(c) After receipt of the statement under paragraph (D)(2)(b) of this rule, the director shall amend any permit covering the source at which the unit is located to add the provisions and requirements of the exemption under paragraphs (D)(2)(a) and (D)(3) of this rule.

(3) Special provisions.

(a) A unit exempt under paragraph (D) of this rule shall not emit any NOx, starting on the date that the exemption takes effect.

(b) The director shall allocate NOx allowances under rule 3745-14-05 of the Administrative Code to a unit exempt under paragraph (D) of this rule. For each control period for which the unit is allocated one or more NOx allowances, the owners and operators of the unit shall specify a general account, in which the administrator will record such NOx allowances.

(c) For a period of five years from the date the records are created, the owners and operators of a unit exempt under paragraph (D) of this rule shall retain at the source that includes the unit, records demonstrating that the unit is permanently retired. The five-year period for keeping records may be extended for cause, at any time prior to the end of the period, in writing by the director or the administrator. The owners and operators bear the burden of proof that the unit is permanently retired.

(d) The owners and operators and, to the extent applicable, the NOx authorized account representative of a unit exempt under this rule shall comply with the requirements of the NOx budget trading program concerning all periods for which the exemption is not in effect, even if such requirements arise, or must be complied with, after the exemption takes effect.

(e) Returning retired units to service.

(i) A unit exempt under paragraph (D) of this rule and located at a source that is required, or but for this exemption would be required, to have a Title V operating permit shall not resume operation unless the NOx authorized account representative of the source submits a complete NOx budget permit application for the unit not less than twelve months before the later of May 1, 2004 or the date on which the unit resumes operation.

(ii) A unit exempt under paragraph (D) of this rule and located at a source that is required, or but for this exemption would be required, to have a non-Title V permit shall not resume operation unless the NOx authorized account representative of the source submits a complete NOx budget permit application for the unit not less than twelve months before the later of May 1, 2004 or the date on which the unit is to first resume operation.

(f) On the earlier of the following dates, a unit exempt under paragraph (D) of this rule shall lose its exemption:

(i) The date on which the NOx authorized account representative submits a NOx budget permit application under paragraph (D)(3)(e) of this rule;

(ii) The date on which the NOx authorized account representative is required under paragraph (D)(3)(e) of this rule to submit a NOx budget permit application; or

(iii) The date on which the unit resumes operation, if the unit is not required to submit a NOx budget permit application.

(g) For the purpose of applying monitoring requirements under rule 3745-14-08 of the Administrative Code, a unit that loses its exemption under paragraph (D) of this rule shall be treated as a unit that commences operation or commercial operation on the first date on which the unit resumes operation.

(h) A unit that is exempt under paragraph (D) of this rule is not eligible to be a NOx budget opt-in unit under rule 3745-14-09 of the Administrative Code.

(E) Standard requirements.

(1) Permit requirements.

(a) The NOx authorized account representative of each NOx budget unit or NOx budget source required to have a federally enforceable permit for the unit or source shall:

(i) Submit to the director a complete NOx budget permit application in accordance with the deadlines specified in paragraphs (B)(2) and (B)(3) of rule 3745-14-03 of the Administrative Code;

(ii) Submit in a timely manner any supplemental information that the director determines is necessary in order to review a NOx budget permit application and issue or deny a NOx budget permit.

(b) The owners and operators of each NOx budget unit or source required to have a federally enforceable permit shall have a NOx budget permit issued by the director and operate the unit in compliance with such NOx budget permit.

(c) The owners and operators of a NOx budget source that is not otherwise required to have a federally enforceable permit are not required to submit a NOx budget permit application, and to have a NOx budget permit for such NOx budget source.

(2) Monitoring requirements.

(a) The owners and operators and, to the extent applicable, the NOx authorized account representative of each NOx budget source and each NOx budget unit at the source shall comply with the monitoring requirements of rule 3745-14-08 of the Administrative Code.

(b) The emissions measurements recorded and reported in accordance with rule 3745-14-08 of the Administrative Code shall be used to determine compliance by the unit with the NOx budget emissions limitation under paragraph (E)(3) of this rule.

(3) NOx allowances.

(a) The owners and operators of each NOx budget source and each NOx budget unit at the source shall hold NOx allowances available for compliance deductions under paragraph (E) of rule 3745-14-06 of the Administrative Code, as of the NOx allowance transfer deadline, in the unit's compliance account and the source's overdraft account in an amount not less than the total NOx emissions for the control period from the unit, as determined in accordance with rule 3745-14-08 of the Administrative Code, plus any amount necessary to account for actual utilization under paragraph (C)(5) of rule 3745-14-05 of the Administrative Code for the control period.

(b) Each ton of NOx emitted in excess of the NOx budget emissions limitation shall constitute a separate violation of this chapter, the Clean Air Act, and applicable Ohio law.

(c) A NOx budget unit shall be subject to the requirements under paragraph (E)(3)(a) of this rule starting on the later of May 31, 2004 or the date on which the unit commences operation.

(d) NOx allowances shall be held in, deducted from, or transferred among NOx allowance tracking system accounts in accordance with rules 3745-14-05, 3745-14-06, 3745-14-07 and 3745-14-09 of the Administrative Code.

(e) A NOx allowance shall not be deducted, in order to comply with the requirements under paragraph (E)(3)(a) of this rule, for a control period in a year prior to the year for which the NOx allowance was allocated.

(f) A NOx allowance allocated by the director under the NOx budget trading program is a limited authorization to emit one ton of NOx in accordance with the NOx budget trading program. No provision of the NOx budget trading program, the NOx budget permit application, the NOx budget permit, or an exemption under paragraph (C)(2) or (D) of this rule and no provision of law shall be construed to limit the authority of the United States or the state of Ohio to terminate or limit such authorization.

(g) A NOx allowance allocated by the director under the NOx budget trading program does not constitute a property right.

(h) Upon recordation by the administrator under rules 3745-14-06 and 3745-14-07 of the Administrative Code, every allocation, transfer, or deduction of a NOx allowance to or from a NOx budget unit's compliance account or the overdraft account of the source where the unit is located is deemed to amend automatically, and become a part of, any NOx budget permit of the NOx budget unit by operation of law without any further review.

(4) The owners and operators of a NOx budget unit that has excess emissions in any control period shall:

(a) Surrender the NOx allowances required for deduction under paragraph (E)(4)(a) of rule 3745-14-06 of the Administrative Code; and

(b) Pay any fine, penalty, or assessment or comply with any other remedy imposed under paragraph (E)(4)(c) of rule 3745-14-06 of the Administrative Code.

(5) Record keeping and reporting requirements.

(a) Unless otherwise provided, the owners and operators of a NOx budget source and each NOx budget unit at the source shall keep on site at the source, or at a central location in Ohio for unattended sources, each of

the following documents for a period of five years from the date the document is created: (This period may be extended for cause, at any time prior to the end of five years, in writing by the director or the administrator. Records for unattended sources retained at a central location shall be available immediately at the central location upon the request of the director or administrator and within three days following receipt of a written request from the director or administrator.)

(i) The account certificate of representation for the NOx authorized account representative for the source and each NOx budget unit at the source and all documents that demonstrate the truth of the statements in the account certificate of representation, in accordance with paragraph (D) of rule 3745-14-02 of the Administrative Code, provided that the certificate and documents shall be retained on site at the source beyond such five-year period until such documents are superseded because of the submission of a new account certificate of representation changing the NOx authorized account representative;

(ii) All emissions monitoring information, in accordance with rule 3745-14-08 of the Administrative Code;

(iii) Copies of all reports, compliance certifications, and other submissions and all records made or required under the NOx budget trading program; and

(iv) Copies of all documents used to complete a NOx budget permit application and any other submission under the NOx budget trading program or to demonstrate compliance with the requirements of the NOx budget trading program.

(b) The NOx authorized account representative of a NOx budget source and each NOx budget unit at the source shall submit the reports and compliance certifications required under the NOx budget trading program, including those under rules 3745-14-04, 3745-14-08 and 3745-14-09 of the Administrative Code.

(6) Liability.

(a) Any person who knowingly violates any requirement or prohibition of the NOx budget trading program, a NOx budget permit, or an exemption under paragraph (C)(2) or (D) of this rule shall be subject to enforcement pursuant to applicable state and federal law.

(b) Any person who knowingly makes a false material statement in any record, submission, or report under the NOx budget trading program shall be subject to criminal enforcement pursuant to applicable state and federal law.

(c) No permit revision shall excuse any violation of the requirements of the NOx budget trading program that occurs prior to the date that the revision takes effect.

(d) Each NOx budget source and each NOx budget unit shall meet the requirements of the NOx budget trading program.

(e) Any provision of the NOx budget trading program that applies to a NOx budget source (including a provision applicable to the NOx authorized account representative of a NOx budget source) shall also apply to the owners and operators of such source and of the NOx budget units at the source.

(f) Any provision of the NOx budget trading program that applies to a NOx budget unit (including a provision applicable to the NOx authorized account representative of a NOx budget unit) shall also apply to the owners and operators of such unit. Except with regard to the requirements applicable to units with a common stack under rule 3745-14-08 of the Administrative Code, the owners and operators and the NOx authorized account representative of one NOx budget unit shall not be liable for any violation by any other NOx budget unit of which they are not owners or operators or the NOx authorized account representative and that is located at a source of which they are not owners or operators or the NOx authorized account representative.

(7) No provision of the NOx budget trading program, a NOx budget permit application, a NOx budget permit, or an exemption under paragraph (C)(2) or (D) of this rule shall be construed as exempting or excluding the owners and operators and, to the extent applicable, the NOx authorized account representative of a NOx budget source or NOx budget unit from compliance with any other provision of the applicable, approved state implementation plan, a federally enforceable permit, or the Clean Air Act.

(F) Computation of time.

(1) Unless otherwise stated, any time period scheduled, under the NOx budget trading program, to begin on the occurrence of an act or event shall begin on the day the act or event occurs.

(2) Unless otherwise stated, any time period scheduled, under the NOx budget trading program, to begin before the occurrence of an act or event shall be computed so that the period ends the day before the act or event occurs.

(3) Unless otherwise stated, if the final day of any time period under the NOx budget trading program, except for the control period defined in paragraph (B)(2)(r) of this rule, falls on a weekend or a state or federal holiday, the time period shall be extended to the next business day.

(G) Referenced materials. This chapter includes references to certain subject matter or materials. The text of the referenced materials is not included in the rules

contained in this chapter. Information on the availability of the referenced materials as well as the date of and the particular edition or version of the material is included in this rule. For materials subject to change, only the specific version specified in this rule are referenced. Material is referenced as it exists on the effective date of this rule. Except for subsequent annual publication of existing (unmodified) Code of Federal Regulation compilations, any amendment or revision to a referenced document is not referenced unless and until this rule has been amended to specify the new dates.

(1) Availability. The materials incorporated by reference are available as follows:

(a) Clean Air Act as defined in this rule. Information and copies may be obtained by writing to: “Superintendent of Documents, Attn: New Orders, PO Box 371954, Pittsburgh, PA 15250-7954.” The full text of the Act as amended in 1990 is also available in electronic format at www.epa.gov/oar/caa/. A copy of the Act is also available for inspection and use at most public libraries and ”The State Library of Ohio.”

(b) Code of Federal Regulations. Information and copies may be obtained by writing to: “Superintendent of Documents, Attn: New Orders, PO Box 371954, Pittsburgh, PA 15250-7954.” The full text of the CFR is also available in electronic format at http://www.ecfr.gov/. The CFR compilations are also available for inspection and use at most Ohio public libraries and “The State Library of Ohio.”

(c) Ohio EPA weekly review. Information and copies may be obtained by writing to: “Ohio EPA Legal Department, 122 S. Front Street, Columbus, Ohio, 43125.” The full text of the Ohio EPA Weekly Review is also available in electronic format at http://epa.ohio.gov/Actions.aspx. The Ohio EPA Weekly Review compilations are also available for inspection and use at most Ohio public libraries and “The State Library of Ohio.”

(d) Federal Registrar. Information and copies may be obtained by writing to: “Superintendent of Documents, Attn: New Orders, PO Box 371954, Pittsburgh, PA 15250-7954.” Text of the Federal Register is also available in electronic format at www.gpoaccess.gov/fr/index.html. The Federal Register is also available for inspection and use at most Ohio public libraries and “The State Library of Ohio.”

(e) American Society for Testing Materials (ASTM). Information and copies may be obtained by writing to: "ASTM International, 100 Bar Harbor Drive, P.O. Box C700, West Conshohocken, Pennsylvania 19428-2959." These documents are available for purchase at www.astm.org. ASTM documents are also generally available at local public libraries and "The State Library of Ohio."

(2) Referenced materials.

(a) 40 CFR 51.121; “Findings and requirements for submission of State implementation plan revisions relating to emissions of oxides of nitrogen;”63 FR 57491, Oct. 27, 1998, as amended at 63 FR 71225, Dec. 24, 1998; 64 FR 26305, May 14, 1999; 65 FR 11230, Mar. 2, 2000; 65 FR 56251, Sept. 18, 2000; 69 FR 21642, Apr. 21, 2004; 70 FR 25317, May 12, 2005; 70 FR 51597, Aug. 31, 2005, 73 FR 21538, Apr. 22, 2008.

(b) 40 CFR 52.34; "Action on petitions submitted under section 126 relating to emissions of nitrogen oxides;" 64 FR 28318, May 25, 1999, as amended at 64 FR 33961, June 24, 1999; 65 FR 2042, Jan. 13, 2000; 65 FR 2726, Jan. 18, 2000; 69 FR 31505, June 3, 2004.

(c) 40 CFR Part 60; "Standards of Performance for New Stationary Sources;" as published in the July 1, 2008 Code of Federal Regulations.

(d) 40 CFR Part 60, Appendix A; “Test Methods 1 through 29;” as published in the July 1, 2008 Code of Federal Regulations.

(e) 40 CFR Part 72; "Permits Regulation;" as published in the July 1, 2008 Code of Federal Regulations.

(f) 40 CFR 72.2; “Definitions;” as published in the July 1, 2008 Code of Federal Regulations.

(g) 40 CFR 72.6; "Applicability;" 58 FR 3650, Jan. 11, 1993, as amended at 58 FR 15648, Mar. 23, 1993; 62 FR 55475, Oct. 24, 1997; 64 FR 28588, May 26, 1999; 66 FR 12978, Mar. 1, 2001.

(h) 40 CFR Part 75; “Continuous Emission Monitoring;” as published in the July 1, 2008 Code of Federal Regulations.

(i) 40 CFR 75.10; “General operating requirements;” 58 FR 3701, Jan. 11, 1993, as amended at 60 FR 26519, May 17, 1995; 64 FR 28590, May 26, 1999; 67 FR 40422, June 12, 2002; 70 FR 28678, May 18, 2005.

(j) 40 CFR 75.11; "Specific provisions for monitoring SO2 emissions (SO2 and flow monitors);" 58 FR 3701, Jan. 11, 1993, as amended at 60 FR 26520, 26566, May 17, 1995; 61 FR 59157, Nov. 20, 1996; 63 FR 57499, Oct. 27, 1998; 64 FR 28590, May 26, 1999; 67 FR 40423, June 12, 2002, 73 FR 4342, Jan. 24, 2008.

(k) 40 CFR 75.17; “Specific provisions for monitoring emissions from common, bypass, and multiple stacks for NOX emission rate;” 58 FR 3701, Jan. 11, 1993, as amended at 60 FR 26523, May 17, 1995; 63 FR 57499, Oct. 27, 1998; 64 FR 28592, May 26, 1999; 67 FR 40424, June 12, 2002, 73 FR 4343, Jan. 24, 2008.

(l) 40 CFR 75.19; “Optional SO2, NOX, and CO2 emissions calculation for low mass emissions (LME) units;” 63 FR 57500, Oct. 27, 1998, as amended at 64 FR 28592, May 26, 1999; 64 FR 37582, July 12, 1999; 67

FR 40424, 40425, June 12, 2002; 67 FR 53504, Aug. 16, 2002, 73 FR 4344, Jan. 24, 2008.

(m) 40 CFR 75.20; “Initial certification and recertification procedures;” 58 FR 3701, Jan. 11, 1993, as amended at 60 FR 26524, May 17, 1995; 60 FR 40296, Aug. 8, 1995; 61 FR 59158, Nov. 20, 1996; 63 FR 57506, Oct. 27, 1998; 64 FR 28592, May 26, 1999; 67 FR 40431, June 12, 2002; 70 FR 28678, May 18, 2005, 72 FR 51527, Sept. 7, 2007; 73 FR 4345, Jan. 24, 2008.

(n) 40 CFR 75.21; “Quality assurance and quality control requirements;” 58 FR 3701, Jan. 11, 1993, as amended at 60 FR 26527, 26566, May 17, 1995; 61 FR 25582, May 22, 1996; 61 FR 59159, Nov. 20, 1996; 64 FR 28599, May 26, 1999; 67 FR 40433, June 12, 2002; 67 FR 53505, Aug. 16, 2002; 70 FR 28679, May 18, 2005, 73 FR 4345, Jan. 24, 2008.

(o) 40 CFR 75.34; "Units with add-on emission controls;" 60 FR 26567, May 17, 1995, as amended at 61 FR 59160, Nov. 20, 1996; 64 FR 28604, May 26, 1999; 67 FR 40438, June 12, 2002, 73 FR 4348, Jan. 24, 2008.

(p) 40 CFR 75.61; “Notifications;” 60 FR 26538, May 17, 1995, as amended at 61 FR 25582, May 22, 1996; 61 FR 59162, Nov. 22, 1996; 64 FR 28620, May 26, 1999; 67 FR 40442, 40443, June 12, 2002, 73 FR 4356, Jan. 24, 2008.

(q) 40 CFR 75.62; “Monitoring plan submittals;” 58 FR 3701, Jan. 11, 1993, as amended at 60 FR 26539, May 17, 1995; 64 FR 28621, May 26, 1999; 67 FR 40443, June 12, 2002, 73 FR 4356, Jan. 24, 2008.

(r) 40 CFR 75.64; "Quarterly Reports;" 64 FR 28622, May 26, 1999, as amended at 67 FR 40444, June 12, 2002, 73 FR 4357, Jan. 24, 2008.

(s) 40 CFR 75.66; “Petitions to the Administrator;” 58 FR 3701, Jan. 11, 1993, as amended at 60 FR 26540, 26569, May 17, 1995; 61 FR 59162, Nov. 20, 1996; 64 FR 28623, May 26, 1999; 67 FR 40444, June 12, 2002, 73 FR 4358, Jan. 24, 2008.

(t) 40 CFR 75.70; “NOX mass emissions provisions;” 63 FR 57507, Oct. 27, 1998, as amended at 64 FR 28624, May 26, 1999; 67 FR 40444, June 12, 2002.

(u) 40 CFR 75.71; “Specific provisions for monitoring NOX and heat input for the purpose of calculating NOX mass emissions;” 63 FR 57508, Oct. 27, 1998, as amended at 64 FR 28624, May 26, 1999; 67 FR 40444, 40445, June 12, 2002; 67 FR 53505, Aug. 16, 2002, 73 FR 4358, Jan. 24, 2008.

(v) 40 CFR 75.72; “Determination of NOX mass emissions;” 63 FR 57507, Oct. 27, 1998, as amended at 67 FR 40445, June 12, 2002, 73 FR 4358, Jan. 24, 2008.

(w) 40 CFR 75.74; "Annual and ozone season monitoring and reporting requirements;" 63 FR 57507, Oct. 27, 1998, as amended at 64 FR 28627, May 26, 1999; 67 FR 40446, 40447, June 12, 2002; 67 FR 57274, Sept. 9, 2002, 73 FR 4360, Jan. 24, 2008.

(x) 40 CFR Part 75, Appendix A; “Specifications and Test Procedures;” as published in the July 1, 2008 Code of Federal Regulations.

(y) 40 CFR Part 75, Appendix B; “Quality Assurance and Quality Control Procedures;” 58 FR 3701, Jan. 11, 1993, as amended at 60 FR 26546, 26571, May 17, 1995; 61 FR 59165, Nov. 20, 1996; 64 FR 28644, May 26, 1999; 64 FR 37582, July 12, 1999; 67 FR 40456, 40457, June 12, 2002; 67 FR 53505, Aug. 16, 2002; 67 FR 57274, Sept. 9, 2002; 70 FR 28693, May 18, 2005, 72 FR 51528, Sept. 7, 2007; 73 FR 4367, Jan. 24, 2008.

(z) 40 CFR Part 75, Appendix D; “Optional SO2 Emissions Data Protocol for Gas-Fired and Oil-Fired Units;” 58 FR 3701, Jan. 11, 1993, as amended at 60 FR 26548, 26551, May 17, 1995; 61 FR 25585, May 22, 1996; 61 FR 59166, Nov. 20, 1996; 63 FR 57513, Oct. 27, 1998; 64 FR 28652-28663, May 26, 1999; 64 FR 37582, July 12, 1999; 67 FR 40460, 40472, June 12, 2002; 67 FR 53505, Aug. 16, 2002, 73 FR 4369, Jan. 24, 2008.

(aa) 40 CFR Part 75, Appendix E; “Optional NOX Emissions Estimation Protocol for Gas-Fired Peaking Units and Oil-Fired Peaking Units;” 58 FR 3701, Jan. 11, 1993, as amended at 60 FR 26551-26553, May 17, 1995; 64 FR 28665, May 26, 1999; 67 FR 40473, 40474, June 12, 2002; 67 FR 53505, Aug. 16, 2002, 73 FR 4372, Jan. 24, 2008.

(bb) 40 CFR Part 75, Appendix F; “Conversion Procedures;” 58 FR 3701, Jan. 11, 1993; Redesignated and amended at 60 FR 26553-26556, 26571, May 17, 1995; 61 FR 25585, May 22, 1996; 61 FR 59166, Nov. 20, 1996; 63 FR 57513, Oct. 27, 1998; 64 FR 28666-28671, May 26, 1999; 64 FR 37582, July 12, 1999; 67 FR 40474, 40475, June 12, 2002; 67 FR 53505, Aug. 16, 2002, 70 FR 28695, May 18, 2005; 73 FR 4372, Jan. 24, 2008.

(cc) 40 CFR Part 75, Subpart D; “Missing Data Substitution Procedures;” as published in the July 1, 2008 Code of Federal Regulations.

(dd) 40 CFR Part 75, Subpart E; “Alternative Monitoring Systems;” as published in the July 1, 2008 Code of Federal regulations.

(ee) 40 CFR Part 75, Subpart F; “Recordkeeping Requirements;” as published in the July 1, 2008 Code of Federal Regulations.

(ff) 40 CFR Part 75, Subpart G; “Reporting Requirements;” as published in the July 1, 2008 Code of Federal Regulations.

(gg) 40 CFR Part 75, Subpart H; “NOX mass emissions provisions;” as published in the July 1, 2008 Code of Federal Regulations.

(hh) ASTM D6522-00(2005); “Standard Test Method for Determination of Nitrogen Oxides, Carbon Monoxide, and Oxygen Concentrations in Emissions from Natural Gas-Fired Reciprocating Engines, Combustion Turbines, Boilers, and Process Heaters Using Portable Analyzers;” approved February 10, 2000, reapproved October 1, 2005.

(ii) Clean Air Act, as contained in 42 USC 7401 to 7671q; "Air Pollution Prevention and Control; " published January 3, 2007 in the 2006 edition of the United States Code.

(jj) “Interstate Ozone Transport: Response to Court Decisions on the NOX SIP Call, NOX SIP Call Technical Amendments, and Section 126 Rules;” 69 FR 21603 to 69 FR 21648, April 21, 2004.

(kk) Section 110 of the Clean Air Act; contained in 42 USC 7410; "State implementation plans for national primary and secondary ambient air quality standards;" published January 3, 2007 in the 2006 Edition of the United States Code.

(ll) Section 126 of the Clean Air Act; contained in 42 USC 7426; "Interstate pollution abatement;" published January 3, 2007 in the 2006 Edition of the United States Code.

(mm) Section 502 of the Clean Air Act; contained in 42 USC 7661a; "Permit programs;" published January 3, 2007 in the 2006 Edition of the United States Code.

(nn) "Technical Amendment to the Finding of Significant Contribution and Rulemaking for Certain States for Purposes of Reducing Regional Transport of Ozone;" 65 FR 11222 to 65 FR 11231, March 2, 2000.

(oo) Title IV of the Clean Air Act, contained in 42 USC 7651 to 7651o; "Acid deposition control;" published January 3, 2007 in the 2006 Edition of the United States Code.

(pp) Title V of the Clean Air Act, contained in 42 USC 7661 to 7661f; "Permits;" published January 3, 2007 in the 2006 Edition of the United States Code.

(qq) USEPA Method 1; contained in 40 CFR Part 60, Appendix A; "Sample and velocity traverses for stationary sources;" as published in the July 1, 2008 Code of Federal Regulations.

(rr) USEPA Method 2; contained in 40 CFR Part 60, Appendix A; "Determination of stack gas velocity and volumetric flow rate (Type S pitot tube);" as published in the July 1, 2008 Code of Federal Regulations.

(ss) USEPA Method 3; contained in 40 CFR Part 60, Appendix A; "Gas analysis for the determination of dry molecular weight;" as published in the July 1, 2008 Code of Federal Regulations.

(tt) USEPA Method 4; contained in 40 CFR Part 60, Appendix A;" Determination of moisture content in stack gases;" as published in the July 1, 2008 Code of Federal Regulations.

(uu) USEPA Method 7; contained in 40 CFR Part 60, Appendix A; "Determination of nitrogen oxide emissions from stationary sources;" as published in the July 1, 2008 Code of Federal Regulations.

(vv) USEPA Method 7a; contained in 40 CFR Part 60, Appendix A; "Determination of nitrogen oxide emissions from stationary sources-Ion chromatographic method;" as published in the July 1, 2008 Code of Federal Regulations.

(ww) USEPA Method 7c; contained in 40 CFR Part 60, Appendix A; "Determination of nitrogen oxide emissions from stationary sources-Alkaline-permanganate/colorimetric method;" as published in the July 1, 2008 Code of Federal Regulations.

(xx) USEPA Method 7e; contained in 40 CFR Part 60, Appendix A; "Determination of Nitrogen Oxides Emissions From Stationary Sources (Instrumental Analyzer Procedure);" as published in the July 1, 2008 Code of Federal Regulations.

Effective: 03/23/2015

Five Year Review (FYR) Dates: 01/06/2015 and 11/17/2019

CERTIFIED ELECTRONICALLY
Certification

03/13/2015
Date

Promulgated Under: 119.03
Statutory Authority: 3704.03(E)
Rule Amplifies: 3704.03(A), 3704.03(D), 3704.03(E)
Prior Effective Dates: 5/25/04, 5/7/05, 7/19/08, 10/18/10

3745-14-02 **The NOx authorized account representative.**

(A) Duties of the NOx authorized account representative.

(1) Except as provided under paragraph (B) of this rule, each NOx budget source, including all NOx budget units at the source, shall have one and only one NOx authorized account representative, with regard to all matters under the NOx budget trading program concerning the source or any NOx budget unit at the source.

(2) The NOx authorized account representative of the NOx budget source shall be selected by an agreement binding on the owners and operators of the source and all NOx budget units at the source.

(3) Upon receipt by the administrator of a complete account certificate of representation under paragraph (D) of this rule, the NOx authorized account representative of the source shall represent and, by his or her representations, actions, inactions, or submissions, legally bind each owner and operator of the NOx budget source represented and each NOx budget unit at the source in all matters pertaining to the NOx budget trading program, notwithstanding any agreement between the NOx authorized account representative and such owners and operators. The owners and operators shall be bound by any decision or order issued to the NOx authorized account representative by the director, the administrator, or a court regarding the source or unit.

(4) No NOx budget permit shall be issued, and no NOx allowance tracking system account shall be established for a NOx budget unit at a source, until the administrator has received a complete account certificate of representation under paragraph (D) of this rule for a NOx authorized account representative of the source and the NOx budget units at the source.

(5) NOx budget trading program submissions

(a) Each submission under the NOx budget trading program shall be submitted, signed, and certified by the NOx authorized account representative for each NOx budget source on behalf of which the submission is made. Each such submission shall include the following certification statement by the NOx authorized account representative:

"I am authorized to make this submission on behalf of the owners and operators of the NOx budget sources or NOx budget units for which the submission is made. I certify under penalty of law that I have personally examined, and am familiar with, the statements and information submitted in this document and all its attachments. Based on my inquiry of those individuals with primary responsibility for obtaining the information, I

certify that the statements and information are to the best of my knowledge and belief true, accurate, and complete. I am aware that there are significant penalties for submitting false statements and information or omitting required statements and information, including the possibility of fine or imprisonment."

(b) The director and the administrator shall accept or act on a submission made on behalf of owner or operators of a NOx budget source or a NOx budget unit only if the submission has been made, signed, and certified in accordance with paragraph (A)(5)(a) of this rule.

(B) The alternate NOx authorized account representative.

(1) An account certificate of representation may designate one and only one alternate NOx authorized account representative who may act on behalf of the NOx authorized account representative. The agreement by which the alternate NOx authorized account representative is selected shall include a procedure for authorizing the alternate NOx authorized account representative to act in lieu of the NOx authorized account representative.

(2) Upon receipt by the administrator of a complete account certificate of representation under paragraph (D) of this rule, any representation, action, inaction, or submission by the alternate NOx authorized account representative shall be deemed to be a representation, action, inaction, or submission by the NOx authorized account representative.

(3) Except in paragraphs (A)(1), (C) and (D) of this rule and paragraph (B) of rule 3745-14-06 of the Administrative Code, whenever the term "NOx authorized account representative" is used in this part, the term shall be construed to include the alternate NOx authorized account representative.

(C) Changing the NOx authorized account representative and the alternate NOx authorized account representative; changes in the owners and operators.

(1) The NOx authorized account representative may be changed at any time upon receipt by the administrator of a superseding complete account certificate of representation. Notwithstanding any such change, all representations, actions, inactions, and submissions by the previous NOx authorized account representative prior to the time and date when the administrator receives the superseding account certificate of representation shall be binding on the new NOx authorized account representative and the owners and operators of the NOx budget source and the NOx budget units at the source.

(2) The alternate NOx authorized account representative may be changed at any time upon receipt by the administrator of a superseding complete account certificate of representation. Notwithstanding any such change, all representations,

actions, inactions, and submissions by the previous alternate NOx authorized account representative prior to the time and date when the administrator receives the superseding account certificate of representation shall be binding on the new alternate NOx authorized account representative and the owners and operators of the NOx budget source and the NOx budget units at the source.

(3) Changes in the owners and operators.

(a) In the event a new owner or operator of a NOx budget source or a NOx budget unit is not included in the list of owners and operators submitted in the account certificate of representation, such new owner or operator shall be deemed to be subject to and bound by the account certificate of representation, the representations, actions, inactions, and submissions of the NOx authorized account representative and any alternate NOx authorized account representative of the source or unit, and the decisions, orders, actions, and inactions of the director or the administrator, as if the new owner or operator were included in such list.

(b) Within thirty days following any change in the owners and operators of a NOx budget source or a NOx budget unit, including the addition of a new owner or operator, the NOx authorized account representative or alternate NOx authorized account representative shall submit a revision to the account certificate of representation amending the list of owners and operators to include the change.

(D) Account certificate of representation.

(1) A complete account certificate of representation for a NOx authorized account representative or an alternate NOx authorized account representative shall include the following elements in a format prescribed by the Administrator:

(a) Identification of the NOx budget source and each NOx budget unit at the source for which the account certificate of representation is submitted;

(b) The name, address, e-mail address (if any), telephone number, and facsimile transmission number (if any) of the NOx authorized account representative and any alternate NOx authorized account representative;

(c) A list of the owners and operators of the NOx budget source and of each NOx budget unit at the source;

(d) The following certification statement by the NOx authorized account representative and any alternate NOx authorized account representative:

"I certify that I was selected as the NOx authorized account representative or alternate NOx authorized account representative, as applicable, by an

agreement binding on the owners and operators of the NOx budget source and each NOx budget unit at the source. I certify that I have all the necessary authority to carry out my duties and responsibilities under the NOx budget trading program on behalf of the owners and operators of the NOx budget source and of each NOx budget unit at the source and that each such owner and operator shall be fully bound by my representations, actions, inactions, or submissions and by any decision or order issued to me by the director, the Administrator, or a court regarding the source or unit."

(e) The signature of the NOx authorized account representative and any alternate NOx authorized account representative and the dates signed.

(2) Unless otherwise required by the director or the administrator, documents of agreement referred to in the account certificate of representation shall not be submitted to the director or the administrator. Neither the director nor the administrator shall be under any obligation to review or evaluate the sufficiency of such documents, if submitted.

(E) Objections concerning the NOx authorized account representative.

(1) Once a complete account certificate of representation has been submitted and received, the director and the administrator shall rely on the account certificate of representation unless and until a superseding complete account certificate of representation is received by the administrator.

(2) Except as provided in paragraphs (C)(1) and (C)(2) of this rule, no objection or other communication submitted to the director or the administrator concerning the authorization, or any representation, action, inaction, or submission of the NOx authorized account representative shall affect any representation, action, inaction, or submission of the NOx authorized account representative or the finality of any decision or order by the director or the administrator under the NOx budget trading program.

(3) Neither the director nor the administrator will adjudicate any private legal dispute concerning the authorization or any representation, action, inaction, or submission of any NOx authorized account representative, including private legal disputes concerning the proceeds of NOx allowance transfers.

Effective: 07/18/2002

R.C. 119.032 review dates: 04/10/2008 and 04/10/2013

CERTIFIED ELECTRONICALLY
Certification

04/10/2008
Date

Promulgated Under: 119.03
Statutory Authority: 3704.03(E)
Rule Amplifies: 3704.03(A), 3704.03(D), 3704.03(E)
Prior Effective Dates: 6/21/1994

3745-14-03 **The NOx budget permit.**

(A) General NOx budget trading program permit requirements.

(1) For each NOx budget source required to have a federally enforceable operating permit, such permit shall include a NOx budget permit administered by the director.

(a) For NOx budget sources required to have a Title V operating permit, the NOx budget portion of the Title V operating permit shall be administered in accordance with Chapter 3745-77 of the Administrative Code except as provided otherwise by this rule or rule 3745-14-09 of the Administrative Code.

(b) For NOx budget sources required to have a non-Title V operating permit, the NOx budget portion of the non-Title V operating permit shall be administered in accordance with Chapter 3745-31 of the Administrative Code, except as provided otherwise by this rule or rule 3745-14-09 of the Administrative Code.

(2) Each NOx budget permit (including a draft or proposed NOx budget permit, if applicable) shall contain all applicable NOx budget trading program requirements and shall be a complete and segregable portion of the permit required under paragraph (A)(1) of this rule.

(B) Submission of NOx budget permit applications.

(1) The NOx authorized account representative of any NOx budget source required to have a federally enforceable operating permit shall submit to the director a complete NOx budget permit application by the applicable deadline in paragraph (B)(2) of this rule.

(2) Application time.

(a) For NOx budget sources required to have a Title V operating permit:

(i) For any source, with one or more NOx budget units that commence operation before January 1, 2000, the NOx authorized account representative shall submit a complete NOx budget permit application covering such NOx budget units to the director before May 1, 2003;

(ii) For any source, with one or more NOx budget units that commence operation on or after January 1, 2000, the NOx authorized account representative shall submit a complete NOx budget permit application covering such NOx budget unit to the director at least twelve months before the later of May 1, 2004 or the date on which the NOx budget unit commences operation.

(b) For NOx budget sources required to have a non-Title V operating permit:

(i) For any source, with one or more NOx budget units that commence operation before January 1, 2000, the NOx authorized account representative shall submit a complete NOx budget permit application covering such NOx budget units to the director before May 1, 2003;

(ii) For any source, with any NOx budget unit that commences operation on or after January 1, 2000, the NOx authorized account representative shall submit a complete NOx budget permit application covering such NOx budget unit to the director at least twelve months before the later of May 1, 2004 or the date on which the NOx budget unit commences operation.

(3) Duty to reapply.

(a) For a NOx budget source required to have a Title V operating permit, the NOx authorized account representative shall submit a complete NOx budget permit renewal application for the NOx budget source covering the NOx budget units at the source in accordance with Chapter 3745-77 of the Administrative Code.

(b) For a NOx budget source required to have a non-Title V operating permit, the NOx authorized account representative shall submit a complete NOx budget permit application for the NOx budget source covering the NOx budget units at the source in accordance with rule 3745-31-04 of the Administrative Code.

[Comment: Applications for sources not subject to Chapter 3745-77 of the Administrative Code submitted prior to June 30, 2008 were submitted in accordance with rule 3745-35-02 of the Administrative Code.]

(C) Information requirements for NOx budget permit applications.

(1) A complete NOx budget permit application shall include the following elements concerning the NOx budget source for which the application is submitted, in a format prescribed by the director:

(a) Identification of the NOx budget source, including plant name and the ORIS (office of regulatory information systems) or facility code assigned to the source by the United States energy information administration, or a facility code assigned to the source by the administrator;

(b) Identification of each NOx budget unit at the NOx budget source and whether it is a NOx budget unit under paragraph (C)(1) of rule 3745-14-01 or rule 3745-14-09 of the Administrative Code;

(c) The standard requirements under paragraph (E) of rule 3745-14-01 of the Administrative Code; and

(d) For each NOx budget opt-in unit at the NOx budget source, the following certification statements by the NOx authorized account representative:

(i) "I certify that each unit for which this permit application is submitted under rule 3745-14-09 of the Administrative Code is not a NOx budget unit under paragraph (C)(1) of rule 3745-14-01 of the Administrative Code and is not covered by an exemption under paragraph (C)(2) or (D) of rule 3745-14-01 of the Administrative Code that is in effect."

(ii) If the application is for an initial NOx budget opt-in permit,

"I certify that each unit for which this permit application is submitted under rule 3745-14-09 of the Administrative Code is currently operating, as that term is defined under paragraph (B)(2) of rule 3745-14-01 of the Administrative Code."

(D) NOx budget permit contents.

(1) Each NOx budget permit (including any draft or proposed NOx budget permit, if applicable) shall contain, in a format prescribed by the director, all elements required for a complete NOx budget permit application under paragraph (C) of this rule.

(2) Each NOx budget permit is deemed to incorporate automatically the definitions of terms under paragraph (B) of rule 3745-14-01 of the Administrative Code and, upon recordation by the Administrator, in accordance with rules 3745-14-06 and 3745-14-07 of the Administrative Code, every allocation, transfer, or deduction of a NOx allowance to or from the compliance accounts of the NOx budget units covered by the permit or the overdraft account of the NOx budget source covered by the permit.

(E) NOx budget permit revisions.

(1) For a NOx budget source with a Title V operating permit, except as provided in paragraph (D)(2) of this rule, the director shall revise the NOx budget permit, as necessary, in accordance with rule 3745-77-08 of the Administrative Code.

(2) For a NOx budget source with a non-Title V operating permit, except as provided in paragraph (D)(2) of this rule, the director shall revise the NOx budget permit, as necessary, in accordance with rule 3745-31-04 of the Administrative Code.

[Comment: Applications for sources not subject to Chapter 3745-77 of the Administrative Code submitted prior to June 30, 2008 were submitted in accordance with rule 3745-35-02 of the Administrative Code.]

Effective: 03/23/2015

Five Year Review (FYR) Dates: 01/06/2015 and 11/17/2019

CERTIFIED ELECTRONICALLY
Certification

03/13/2015
Date

Promulgated Under: 119.03
Statutory Authority: 3704.03(E)
Rule Amplifies: 3704.03(A), 3704.03(D), 3704.03(E)
Prior Effective Dates: 6/21/94, 7/18/02, 5/25/04, 7/19/08

3745-14-04 **Compliance certification.**

(A) The compliance certification report.

(1) For each control period in which one or more NOx budget units at a source are subject to the NOx budget emissions limitation, the NOx authorized account representative of the source shall submit to the director and the administrator, by November thirtieth of that year, a compliance certification report for each source covering all such units.

(2) The NOx authorized account representative shall include in the compliance certification report under paragraph (A)(1) of this rule the following elements, in a format prescribed by the administrator, concerning each unit at the source and subject to the NOx budget emissions limitation for the control period covered by the report:

(a) Identification of each NOx budget unit;

(b) At the NOx authorized account representative's option, the serial numbers of the NOx allowances that are to be deducted from each unit's compliance account under paragraph (E) of rule 3745-14-06 of the Administrative Code for the control period;

(c) At the NOx authorized account representative's option, for units sharing a common stack and having NOx emissions that are not monitored separately or apportioned in accordance with rule 3745-14-08 of the Administrative Code, the percentage of allowances that is to be deducted from each unit's compliance account under paragraph (E)(5) of rule 3745-14-06 of the Administrative Code; and

(d) The compliance certification under paragraph (A)(3) of this rule.

(3) In the compliance certification report under paragraph (A)(1) of this rule, the NOx authorized account representative shall certify, based on reasonable inquiry of those persons with primary responsibility for operating the source and the NOx budget units at the source in compliance with the NOx budget trading program, whether each NOx budget unit for which the compliance certification is submitted was operated during the calendar year covered by the report in compliance with the requirements of the NOx budget trading program applicable to the unit, including all the following:

(a) Whether the unit was operated in compliance with the NOx budget emissions limitation;

(b) Whether the monitoring plan that governs the unit has been maintained to reflect the actual operation and monitoring of the unit, and contains all information necessary to attribute NOx emissions to the unit, in accordance with rule 3745-14-08 of the Administrative Code;

(c) Whether all the NOx emissions from the unit, or a group of units (including the unit) using a common stack, were monitored or accounted for through the missing data procedures and reported in the quarterly monitoring reports, including whether conditional data were reported in the quarterly reports in accordance with rule 3745-14-08 of the Administrative Code, and if conditional data were reported, the owner or operator shall indicate whether the status of all conditional data has been resolved and all necessary quarterly report resubmissions have been made;

(d) Whether the facts that form the basis for certification under rule 3745-14-08 of the Administrative Code of each monitor at the unit or a group of units (including the unit) using a common stack, or for using an excepted monitoring method or alternative monitoring method approved under rule 3745-14-08 of the Administrative Code, if any, have changed.

(e) If a change is required to be reported under paragraph (A)(3)(d) of this rule, specify the nature of the change, the reason for the change, when the change occurred, and how the unit's compliance status was determined subsequent to the change, including what method was used to determine emissions when a change mandated the need for monitor recertification.

(B) Director's or administrator's action on compliance certifications.

(1) The director or administrator may review and conduct independent audits concerning any compliance certification or any other submission under the NOx budget trading program and make appropriate adjustments of the information in the compliance certifications or other submissions.

(2) The administrator may deduct NOx allowances from or transfer NOx allowances to a unit's compliance account or a source's overdraft account based on the information in the compliance certifications or other submissions, as adjusted under paragraph (B)(1) of this rule.

Effective: 07/18/2002

R.C. 119.032 review dates: 04/10/2008 and 04/10/2013

CERTIFIED ELECTRONICALLY
Certification

04/10/2008
Date

Promulgated Under: 119.03
Statutory Authority: 3704.03(E)
Rule Amplifies: 3704.03(A), 3704.03(D), 3704.03(E)
Prior Effective Dates: 6/21/94

3745-14-05 **NOx allowance allocations.**

[Comment: For dates of non-regulatory government publications, publications of recognized organizations and associations, federal rules, and federal statutory provisions referenced in this rule, see the "Incorporation by Reference" section at the end of rule 3745-14-01 of the Administrative Code.]

(A) The state trading program budget allocated by the director under paragraph (C) of this rule for a control period shall equal the total number of tons of NOx emissions apportioned to the NOx budget units in Ohio for the control period, as determined by the applicable, approved state implementation plan, less the sum of the NOx emission limitations (in tons) for each unit exempt under paragraph (C)(2) of rule 3745-14-01 of the Administrative Code that is not allocated any NOx allowances under paragraph (C)(2) or (C)(3) of this rule for the control period and whose NOx emission limitation is not included in the current calculations under paragraph (C)(4)(e)(ii)(b) of this rule for the control period. (Ohio's trading program budget is forty-nine thousand four hundred sixty NOx allowances: forty-five thousand four hundred thirty-two for units under paragraph (C)(1)(a) of rule 3745-14-01 of the Administrative Code, and four thousand twenty-eight for units under paragraph (C)(1)(b) of rule 3745-14-01 of the Administrative Code.)

(B) Timing requirements for NOx allowance allocations.

(1) The NOx allowance allocations, determined in accordance with paragraphs (C)(1) to (C)(3) of this rule, for the control periods in 2004 through 2007 are set forth in appendices A and B of this rule.

(2) By April 1, 2005, the director shall submit to the administrator the NOx allowance allocations, determined in accordance with paragraphs (C)(1) to (C)(3) of this rule, for the control periods in 2008 through 2012.

(3) By April 1, 2010, and by April 1 of 2015, and thereafter by April first of the year that is five years after the last year for which NOx allowance allocations are determined, the director shall submit to the administrator the NOx allowance allocations determined in accordance with paragraphs (C)(1) to (C)(3) of this rule, for the control periods in the years that are three, four, five, six and seven years after the applicable deadline under this paragraph.

(4) By April 1, 2004 and April first of each year thereafter, the director shall submit to the administrator the NOx allowance allocations determined in accordance with paragraph (C)(4) of this rule, for the control period in the year of the applicable deadline under this paragraph.

(5) If the director fails to submit to the administrator the NOx allowance allocations in accordance with paragraphs (B)(1) to (B)(3) of this rule, the administrator

shall allocate, for the applicable control period, the same number of NOx allowances to NOx budget units as were allocated to the NOx budget units for the preceding control period.

(6) The director shall make available to the public each determination of NOx allowance allocations under this rule according to the following procedures:

(a) Notice shall be given: by publication in a newspaper of general circulation in the area where the source is located and in the "Ohio EPA Weekly Review"; to persons on a mailing list developed by the director, including those who request in writing to be on the list; and by other means if necessary to assure adequate notice to the affected public;

(b) The notice shall identify the names and addresses of the affected facilities; the NOx allowances to be assigned to each NOx budget unit at each facility; the name and address of the director; and the name, address, and telephone number of a person from whom interested persons may obtain additional information;

(c) The director shall provide at least thirty days for public comment;

(d) The director shall keep a record of the commenters and also of the issues raised during the public participation process and such records shall be available to the public.

(C) NOx allowance allocations.

(1) Heat inputs used to calculate NOx allowance allocations.

(a) The heat input (in mmBtu) used for calculating NOx allowance allocations for each NOx budget unit under paragraph (C)(1) of rule 3745-14-01 of the Administrative Code shall be:

(i) For a NOx allowance allocation under paragraph (B)(1) of this rule:

(a) For a unit under paragraph (C)(1)(a) of rule 3745-14-01 of the Administrative Code, the average of the two highest amounts of the unit's heat input for the control periods in 1995 through 1998; or

(b) For a unit under paragraph (C)(1)(b) of rule 3745-14-01 of the Administrative Code, the control period in 1995 or, if the director determines that reasonably reliable data are available for control periods in 1996 through 1998, the average of the two highest amounts of the unit's heat input for the control periods in 1995 through 1998.

(ii) For a NOx allowance allocation under paragraphs (B)(2) and (B)(3) of this rule, the average of the unit's two highest control period heat input in the years that are four, five, six, seven and eight years before the first year for which the allocation is being calculated;

(iii) For a NOx allowance allocation under paragraphs (B)(2) and (B)(3) of this rule, if a NOx budget unit does not have five years of control period heat input, the following shall apply:

(a) For a NOx budget unit with more than two years of control period heat input data the average of the two highest control period heat input;

(b) For a NOx budget unit with only two years of control period heat input data, the average of the control period heat input for those two years; or

(c) For a NOx budget unit with one year of control period heat input data, the heat input for that control period.

(b) The unit's heat input for the control period in each year specified in paragraph (C)(1)(a) of this rule shall be determined in accordance with 40 CFR Part 75. Notwithstanding the first sentence of this paragraph (C)(1)(b) of this rule:

(i) For a NOx allowance allocation under paragraph (B) of this rule, such heat input shall be determined using the best available data reported to the director for the unit if the unit was not otherwise subject to the requirements of 40 CFR Part 75 for the control period;

(ii) For a NOx allowance allocation under paragraph (B)(2) or (B)(3) of this rule for a unit exempt under paragraph (C)(2) of rule 3745-14-01 of the Administrative Code, such heat input shall be treated as zero if the unit is exempt under paragraph (C)(2) of rule 3745-14-01 of the Administrative Code during the control period.

(2) For each group of control periods specified in paragraphs (B)(1) to (B)(3) of this rule, the director shall allocate, to all NOx budget units under paragraph (C)(1)(a) of rule 3745-14-01 of the Administrative Code that commenced operation before May 1, 1997 for allocations under paragraph (B)(1) of this rule; May 1, 2003 for allocations under paragraph (B)(2) of this rule; and May first of the year five years before the first year for which the allocation under paragraph (B)(3) of this rule is being calculated, a total number of NOx allowances equal to ninety-five per cent in 2004 and 2005, and ninety-three per cent in all subsequent years, of the portion of the state trading program budget under

paragraph (A) of this rule covering such units. The director shall allocate allowances in accordance with the following procedures:

(a) The director shall allocate NOx allowances to each NOx budget unit under paragraph (C)(1)(a) of rule 3745-14-01 of the Administrative Code for each control period in an amount equaling the lesser of 0.15 pound per mmBtu or the unit's most stringent state or federal NOx emission limitation multiplied by the heat input determined under paragraph (C)(1) of this rule, divided by two thousand pounds per ton, rounded to the nearest whole NOx allowance as appropriate.

(b) If the initial total number of NOx allowances allocated to all NOx budget units under paragraph (C)(1)(a) of rule 3745-14-01 of the Administrative Code for a control period under paragraph (C)(2)(a) of this rule does not equal ninety-five per cent in 2004 and 2005, and ninety-three per cent in all subsequent years, of the state trading program budget under paragraph (A) of this rule covering such units, the director shall adjust the total number of NOx allowances allocated to all such NOx budget units for the control period under paragraph (C)(2)(a) of this rule so that the total number of NOx allowances allocated equals ninety-five per cent in 2004 and 2005, and ninety- three per cent in all subsequent years, of such portion of the state trading program budget. This adjustment shall be made by multiplying each unit's allocation by ninty-five per cent in 2004 and 2005, and ninety-three per cent in all subsequent years, of such portion of the state trading program budget under paragraph (A) of this rule, dividing by the total number of NOx allowances allocated under paragraph (C)(2)(a) of this rule for the control period, and rounding to the nearest whole number of NOx allowances as appropriate.

(3) For each group of control periods under paragraphs (B)(1) to (B)(3) of this rule, the director shall allocate to all NOx budget units under paragraph (C)(1)(b) of rule 3745-14-01 of the Administrative Code that commenced operation before May 1, 1997 for allocations under paragraph (B)(1) of this rule; May 1, 2003 for allocations under paragraph (B)(2) of this rule, and May first of the year five years before the first year for which the allocation under paragraph (B)(3) of this rule is being calculated, a total number of NOx allowances equal to ninety-five per cent of portion of the state trading program budget under paragraph (A) of this rule covering such units. The director shall allocate allowances in accordance with the following procedures:

(a) The director shall allocate NOx allowances to each NOx budget unit under paragraph (C)(1)(b) of rule 3745-14-01 of the Administrative Code for each control period in an amount equaling the lesser of 0.17 pound per mmBtu or the unit's most stringent state or federal NOx emission limitation multiplied by the heat input determined under paragraph (C)(1) of this rule, divided by

two thousand pounds per ton, and rounded to the nearest whole number of NOx allowances as appropriate.

(b) If the initial total number of NOx allowances allocated to all NOx budget units under paragraph (C)(1)(b) of rule 3745-14-01 of the Administrative Code for a control period under paragraph (C)(3)(a) of this rule does not equal ninety-five per cent of the portion of the state trading program budget under paragraph (A) of this rule covering such units, the director shall adjust the total number of NOx allowances allocated to all such NOx budget units for the control period under paragraph (C)(3)(a) of this rule so that the total number of NOx allowances allocated equals ninety-five per cent of the portion of the state trading program budget under paragraph (A) of this rule covering such units. This adjustment shall be made by multiplying each unit's allocation by ninety-five per cent of the portion of the state trading program budget under paragraph (A) of this rule covering such units, dividing by the total number of NOx allowances allocated under paragraph (C)(3)(a) of this rule, and rounding to the nearest whole NOx allowance as appropriate.

(4) For each control period under paragraph (B)(4) of this rule, the director shall allocate NOx allowances to NOx budget units under paragraph (C)(1) of rule 3745-14-01 of the Administrative Code that commence operation, or are projected to commence operation, on or after the following dates: May 1, 1997, for control periods under paragraph (B)(1) of this rule; May 1, 2003, for control periods under paragraph (B)(2) of this rule; and May first of the year five years before the beginning of the group of five years that includes the control period, for control periods under paragraph (B)(3) of this rule. The director shall make the allocations under this paragraph (C)(4) of this rule in accordance with the following procedures:

(a) The director shall establish a new source set-aside for each control period. Each new source set-aside shall be allocated NOx allowances equal to five per cent of the total state trading program budget under paragraph (A) of this rule, rounded to the nearest whole number of NOx allowances as appropriate.

(b) The NOx authorized account representative of a NOx budget unit specified in paragraph (C)(4) of this rule may submit to the director a request, in a format specified by the director, to be allocated NOx allowances for the control period. The NOx allowance allocation request shall be submitted to the director on or after the date on which the director issues a permit to construct the unit and by January first before the control period for which the NOx allowances are requested.

(c) In a NOx allowance allocation request under paragraph (C)(4)(b) of this rule, the NOx authorized account representative for a NOx budget unit under

paragraph (C)(1)(a) of rule 3745-14-01 of the Administrative Code may request for a control period NOx allowances in an amount that does not exceed the lesser of:

(i) 0.15 pound per mmBtu multiplied by the unit's maximum design heat input, multiplied by the lesser of three thousand six hundred seventy-two hours or the number of hours remaining in the control period starting with the day in the control period on which the unit commences operation or is projected to commence operation, divided by two thousand pounds per ton, and rounded to the nearest whole number of NOx allowances as appropriate; or

(ii) The unit's most stringent state or federal NOx emission limitation multiplied by the unit's maximum design heat input, multiplied by the lesser of three thousand six hundred seventy-two hours or the number of hours remaining in the control period starting with the day in the control period on which the unit commences operation or is projected to commence operation, divided by two thousand pounds per ton, and rounded to the nearest whole number of NOx allowances as appropriate.

(d) In a NOx allowance allocation request under paragraph (C)(4)(b) of this rule, the NOx authorized account representative for a NOx budget unit under paragraph (C)(1)(b) of rule 3745-14-01 of the Administrative Code may request for the control period NOx allowances in an amount that does not exceed the lesser of:

(i) 0.17 pound per mmBtu multiplied by the unit's maximum design heat input, multiplied by the lesser of three thousand six hundred seventy two hours or the number of hours remaining in the control period starting with the day in the control period on which the unit commences operation or is projected to commence operation, divided by two thousand pounds per ton, and rounded to the nearest whole number of NOx allowances as appropriate; or

(ii) The unit's most stringent state or federal NOx emission limitation multiplied by the unit's maximum design heat input, multiplied by the lesser of three thousand six hundred seventy-two hours or the number of hours remaining in the control period starting with the day in the control period on which the unit commences operation or is projected to commence operation, divided by two thousand pounds per ton, and rounded to the nearest whole number of NOx allowances as appropriate.

(e) The director shall review each NOx allowance allocation request submitted in accordance with paragraph (C)(4)(b) of this rule and shall allocate NOx allowances pursuant to such request as follows:

(i) Upon receipt of the NOx allowance allocation request, the director shall make any necessary adjustments to the request to ensure that the requirements of paragraphs (C)(4), (C)(4)(b), (C)(4)(c), and (C)(4)(d) of this rule are met.

(ii) The director shall determine the following amounts:

(a) The sum of the NOx allowances requested (as adjusted under paragraph (C)(4)(e)(i) of this rule) in all NOx allowance allocation requests under paragraph (C)(4)(b) of this rule for the control period; and

(b) For units exempt under paragraph (C)(2) of rule 3745-14-01 of the Administrative Code that commenced operation, or are projected to commence operation, on or after May 1, 1997, for control periods under paragraph (B)(1) of this rule; May 1, 2003, for control periods under paragraph (B)(2) of this rule; and May first of the year five years before beginning of the group of five years that includes the control period for control periods under paragraph (B)(3) of this rule, the sum of the NOx emission limitations (in tons of NOx) on which each unit's exemption under paragraph (C)(2) of rule 3745-14-01 of the Administrative Code is based.

(iii) If the number of NOx allowances in the new source set-aside, under paragraph (C)(4)(a) of this rule, for the control period less the amount under paragraph (C)(4)(e)(ii)(b) of this rule is not less than the amount determined under paragraph (C)(4)(e)(ii)(a) of this rule, the director shall allocate the amount of the NOx allowances requested (as adjusted under paragraph (C)(4)(e)(i) of this rule) to the NOx budget unit for which the allocation request was submitted.

(iv) If the number of NOx allowances in the new source set-aside, under paragraph (C)(4)(a) of this rule, for the control period less the amount under paragraph (C)(4)(e)(ii)(b) of this rule is less than the amount determined under paragraph (C)(4)(e)(ii)(a) of this rule, the director shall allocate, to the NOx budget unit for which the allocation request was submitted, the amount of NOx allowances requested (as adjusted under paragraph (C)(4)(e)(i) of this rule) multiplied by the number of NOx allowances in the new source set-aside for the control period less the amount determined under paragraph (C)(4)(e)(ii)(b) of this rule, divided by the amount determined under paragraph (C)(4)(e)(ii)(a) of

this rule, and rounded to the nearest whole number of NOx allowances as appropriate.

(f) By April first of the year for which the request for allocations from the new unit allocation set-aside was made under paragraph (C)(4)(b) of this rule, the director shall take appropriate action under paragraph (C)(4)(e) of this rule and notify the NOx authorized account representative that submitted the request and the administrator of the number of NOx allowances allocated for the control period to the NOx budget unit.

(5) For a NOx budget unit that is allocated NOx allowances under paragraph (C)(4) of this rule for a control period, the administrator shall deduct NOx allowances under paragraph (E)(2) or (E)(5) of rule 3745-14-06 of the Administrative Code to account for the actual utilization of the unit during the control period. The administrator shall calculate the number of NOx allowances to be deducted to account for the unit's actual utilization using the following formulas and rounding to the nearest whole NOx allowance as appropriate, provided that the number of NOx allowances to be deducted shall be zero if the number calculated is less than zero:

(a) NOx allowances deducted for actual utilization for units under paragraph (C)(1)(a) of rule 3745-14-01 of the Administrative Code equals the unit's NOx allowances allocated for the control period minus the unit's actual control period utilization multiplied by the lesser of 0.15 pound per mmBtu or the unit's most stringent state or federal NOx emission limitation, divided by two thousand pounds per ton rounded to the nearest whole NOx allowance as appropriate.

(b) NOx allowances deducted for actual utilization for units under paragraph (C)(1)(b) of rule 3745-14-01 of the Administrative Code equals the unit's NOx allowances allocated for the control period minus the unit's actual control period utilization multiplied by the lesser of 0.17 pound per mmBtu or the unit's most stringent state or federal NOx emission limitation, divided by two thousand pounds per ton rounded to the nearest whole NOx allowance as appropriate.

Where the:

"Unit's NOx allowances allocated for control period" is the number of NOx allowances allocated to the unit for the control period under paragraph (C)(4) of this rule; and

"Unit's actual control period utilization" is the utilization (in mmBtu), as defined in paragraph (B) of rule 3745-14-01 of the Administrative Code, of the unit during the control period.

(6) After making the deductions for compliance under paragraph (E)(2), (E)(5) or (E)(6) of rule 3745-14-06 of the Administrative Code for a control period, the administrator shall notify the director whether any NOx allowances remain in the new unit allocation set-aside for the control period. The director shall allocate any such NOx allowances to the NOx budget units in the state using the following formula and rounding to the nearest whole NOx allowance as appropriate:

(Unit's share of NOx allowances remaining in the new unit allocation set-aside) = (total NOx allowances remaining in new unit allocation set-aside) x (unit's NOx allowance allocation) / (state trading program budget excluding the new unit allocation set-aside)

Where the:

"Total NOx allowances remaining in new unit allocation set-aside" is the total number of NOx allowances remaining in the new unit allocation set-aside for the control period;

"Unit's NOx allowance allocation" is the number of NOx allowances allocated under paragraph (C)(2) or (C)(3) of this rule to the unit for the control period to which the new unit allocation set-aside applies; and

"State trading program budget excluding new unit allocation set-aside" is the state's trading program budget under paragraph (A) of this rule for the control period to which the new unit allocation set-aside applies multiplied by ninety-five per cent rounded to the nearest whole NOx allowance as appropriate.

(7) The director shall establish an allocation set-aside for each control period beginning in 2006 for energy efficiency/renewable energy projects. Each energy efficiency/renewable energy project set-aside shall be allocated NOx allowances equal to one per cent of the tons of NOx emissions in the state trading program budget under paragraph (A) of this rule as applicable to units identified by paragraph (C)(1)(a) of rule 3745-14-01 of the Administrative Code, rounded to the nearest whole NOx allowance as appropriate.

(a) Applicants may submit a proposal to the director for an energy efficiency/renewable energy project and request allocations from the energy efficiency/renewable energy project set-aside for energy reductions obtained as a result of the project. The director shall review proposals based on criteria determined by the director, and notify applicants of approved projects. Proposals must contain the following:

(i) A detailed description of the project; and

(ii) An estimate of the number of allocations that will be requested.

(b) To receive allocations for the energy efficiency/renewable energy projects approved by the director, the applicant must submit a completed project report that verifies that the project was completed as proposed and that proposed energy reductions were obtained.

(c) Upon verification of the project's success, the director shall award the required allocations to the applicant.

(d) Allocations shall be awarded on an annual basis and for no more than five consecutive years for each approved energy efficiency/renewable energy project.

(8) The director shall establish an allocation set-aside for each control period beginning in 2006 for innovative technology projects. Each innovative technology project set-aside shall be allocated NOx allowances equal to one per cent of the tons of NOx emissions in the state trading program budget under paragraph (A) of this rule as applicable to units identified by paragraph (C)(1)(a) of rule 3745-14-01 of the Administrative Code, rounded to the nearest whole NOx allowance as appropriate.

(a) Applicants may submit a proposal to the director for an innovative technology project and request allocations from the innovative technology project set-aside for NOx reductions or energy reductions obtained. The director shall review proposals based on criteria determined by the director, and notify applicants of approved projects. Proposals must contain the following:

(i) A detailed description of the project; and

(ii) An estimate of the number of allocations that will be requested.

(b) To receive allocations for the innovative technology projects approved by the director, the applicant shall submit a completed project report that verifies that the project was completed as proposed and that proposed NOx reductions or energy reductions were obtained.

(c) Upon verification of the project's success, the director shall award the required allocations to the applicant.

(d) Allocations shall be awarded on an annual basis and for no more than five consecutive years for each approved innovative technology project.

(9) Allowances remaining at the end of each year in the energy efficiency/renewable energy allocation set-aside or in the innovative technology project allocation set-aside, shall be allocated to NOx budget units under paragraph (C)(1)(a) of rule

3745-14-01 of the Administrative Code in the following year, prorated on the basis of each unit's previous year allocations.

(D) Early reduction credit. The owner or operator of a NOx budget unit may request early reduction credit for NOx emission rate reductions made in the unit during the 2001, 2002 or 2003 control periods. The director may allocate NOx allowances, to be used in 2004 and 2005, to the unit in accordance with the following requirements:

(1) Each NOx budget unit for which the owner or operator requests any early reduction credit under this rule shall monitor and report NOx emissions in accordance with rule 3745-14-08 of the Administrative Code starting in the 2000 control period and for each control period for which such early reduction credit is requested. The unit's per cent monitor data availability shall be not less than ninety per cent during the 2000 control period, and the unit shall be in compliance with any applicable state or federal emission control requirements during 2000 through 2003.

(2) The NOx emission rate and heat input under paragraphs (D)(3) and (D)(4) of this rule shall be determined in accordance with rule 3745-14-08 of the Administrative Code.

(3) Each NOx budget unit for which the owner or operator requests early reduction credit under paragraph (D)(4) of this rule shall reduce its NOx emission rate for each control period for which early reduction credit is requested to less than eighty per cent of the unit's NOx emission rate in the 2000 control period. Early reduction credits shall not be earned for NOx reductions required under the state implementation plan or otherwise required under any provision of the Clean Air Act.

(4) The NOx authorized account representative of a NOx budget unit that meets the requirements of paragraphs (D)(1) and (D)(3) of this rule may submit to the director a request for early reduction credit based on NOx emission rate reductions for the unit in any or all of the control periods in 2001, 2002 or 2003.

(a) The NOx authorized account representative may request early reduction credit for NOx reductions made in the 2001, 2002 or 2003 control periods in the amount equal to the following: the unit's heat input for such control period multiplied by the difference between the unit's NOx emission rate (in pound per mmBtu) during the 2000 control period and the NOx emission rate (in pound per mmBtu) for each control period for which early reduction credits are requested, divided by two thousand pounds per ton and rounded to the nearest whole number of tons as appropriate.

(b) Requests for early reduction credit for reductions made in 2001 and 2002 shall be submitted, in a format specified by the director, by February 1, 2003; and for reductions made in 2003, by February 1, 2004.

(5) The director shall allocate NOx allowances, to NOx budget units meeting the requirements of paragraphs (D)(1) to (D)(3) of this rule and covered by early reduction credit requests meeting the requirements of paragraph (D)(4)(b) of this rule, in accordance with the following procedures:

(a) Upon receipt of such early reduction credit requests, the director shall make any necessary adjustments to the request to ensure that the amount of the early reduction credit requested meets the requirement of paragraphs (D)(1) to (D)(4) of this rule.

(b) If the combined number of early reduction credit in all accepted early reduction credit requests for 2001 and 2002 is not greater than eleven thousand one hundred fifty-one, and the early reduction credit in all accepted early reduction credit requests for 2003 is not greater than eleven thousand one hundred fifty, the director shall allocate to each NOx budget unit covered by such accepted requests one allowance for each early reduction credit requested.

(c) If the combined number of early reduction credit in all accepted early reduction credit requests for 2001 and 2002 is greater than eleven thousand one hundred fifty-one, or the early reduction credit in all accepted early reduction credit requests for 2003 is greater than eleven thousand one hundred fifty, the director shall allocate NOx allowances to each NOx budget unit covered by such requests according to the following formula and rounded to the nearest whole number of NOx allowances as appropriate:

(unit's allocated early reduction credit) = (unit's adjusted early reduction credit) x (A)/ (total adjusted early reduction credit requested by all units)

Where:

A = eleven thousand one hundred fifty-one for early reduction credit request made for early reductions made in 2001 and 2002; and eleven thousand one hundred fifty for early reduction credit requests for early reductions made in 2003;

"Unit's adjusted early reduction credit" means the number of early reduction credit for the unit for the combined years 2001 and 2002, or 2003 in accepted early reduction credit requests, as adjusted under paragraph (D)(5)(a) of this rule;

"Total adjusted early reduction credit requested by all units" means the number of early reduction credit for all units for the combined years 2001

and 2002, or 2003 in accepted early reduction credit requests, as adjusted under paragraph (D)(5)(a) of this rule.

(6) The director shall notify the NOx authorized account representatives who requested early reduction credit according to paragraph (D)(4) of this rule the amount of early reduction credit the administrator will record as NOx allowances for early reductions made during the control periods in 2001, 2002 and 2003 by the following dates:

(a) April 1, 2003, for NOx emission rate reductions made during the 2001 and 2002 control periods; and

(b) April 1, 2004, for NOx emission rate reductions made during the 2003 control period.

(7) The director shall submit to the administrator the NOx allowance allocations determined in accordance with paragraph (D)(5) of this rule by the following dates:

(a) By May 1, 2003, for NOx emission reductions made during the 2001 and 2002 control periods;

(b) By May 1, 2004, for NOx emission reductions made during the 2003 control period.

(8) NOx allowances recorded under paragraph (D)(7) of this rule may be deducted for compliance under paragraph (E) of rule 3745-14-06 of the Administrative Code for the control periods in 2004 and 2005. Notwithstanding paragraph (F)(1)(a) of rule 3745-14-06 of the Administrative Code, the administrator shall deduct, as retired, any NOx allowance that is recorded under paragraph (D)(7) of this rule and is not deducted for compliance in accordance with paragraph (E) of rule 3745-14-06 of the Administrative Code for the control periods in 2004 and 2005.

(9) NOx allowances recorded under paragraph (D)(7) of this rule are treated as banked allowances in 2004 and 2005 for the purposes of paragraph (F)(1)(b) of rule 3745-14-06 of the Administrative Code.

(10) The total number of NOx allowances available for early reduction credit shall be twenty two thousand three hundred one. Of this amount, eleven thousand one hundred fifty-one NOx allowances shall be available as early reduction credit for reductions made in the control periods in 2001 and 2002, and eleven thousand one hundred fifty NOx allowances shall be available as early reduction credit for reductions made in the control period in 2003. NOx allowances available for reductions made in the 2001 and 2002 control periods that are not allocated by the director in accordance with paragraph (D)(5) of this rule shall

be available for reductions made during the control period in 2003. NOx allowances available for reductions made in the 2001, 2002 and 2003 control periods that are not allocated or recorded by the director in accordance with paragraph (D)(5) of this rule shall be retired.

Effective: 04/16/2011

R.C. 119.032 review dates: 07/19/2013

CERTIFIED ELECTRONICALLY
Certification

04/06/2011
Date

Promulgated Under: 119.03
Statutory Authority: 3704.03(E)
Rule Amplifies: 3704.03(A), 3704.03(D), 3704.03(E)
Prior Effective Dates: 6/21/94, 7/18/02, 5/25/04, 5/7/05, 4/24/06(emer.), 7/17/06, 7/19/08

3745-14-05 Appendix A
Annual NOx allowance allocations to regulated electrical generating units for each year from 2004 through 2007

Plant	Plant ID	Point ID	NOx allocations	
			2004 and 2005	2006 and 2007
Ashtabula	2835	7	333	326
Ashtabula	2835	8	70	69
Ashtabula	2835	9	66	65
Ashtabula	2835	10	75	73
Ashtabula	2835	11	80	78
Avon Lake	2836	9	41	40
Avon Lake	2836	10	139	136
Avon Lake	2836	12	1,040	1,018
Avon Lake	2836	CT10	3	3
Bay Shore	2878	1	208	204
Bay Shore	2878	2	229	224
Bay Shore	2878	3	213	209
Bay Shore	2878	4	330	323
Cardinal	2828	1	1,030	1,008
Cardinal	2828	2	1,083	1,060
Cardinal	2828	3	1,079	1,056
Conesville	2840	1	214	209
Conesville	2840	2	203	199
Conesville	2840	3	212	208
Conesville	2840	4	1,119	1,095
Conesville	2840	5	731	716
Conesville	2840	6	736	721
Dicks Creek	2831	1	7	7
Eastlake	2837	1	214	209
Eastlake	2837	2	230	225
Eastlake	2837	3	251	246
Eastlake	2837	4	371	363
Eastlake	2837	5	974	953
Eastlake	2837	6	1	1
Edge Water	2857	13	65	64
Edge Water	2857	A	1	1
Edge Water	2857	B	1	1
Frank M. Tait	2847	GT1	23	23
Frank M. Tait	2847	GT2	25	24
General J. M. Gavin	8102	1	2,744	2,686
General J. M. Gavin	8102	2	2,981	2,918
Hamilton	2917	9	110	108
J. M. Stuart	2850	1	1,054	1,032
J. M. Stuart	2850	2	1,228	1,202
J. M. Stuart	2850	3	1,074	1,051

J. M. Stuart	2850	4	1,106	1,083
Killen Station	6031	2	1,706	1,670
Kyger Creek	2876	1	471	461
Kyger Creek	2876	2	471	461
Kyger Creek	2876	3	478	468
Kyger Creek	2876	4	465	455
Kyger Creek	2876	5	455	445
Lake Shore	2838	18	195	191
Mad River	2860	A	2	2
Mad River	2860	B	2	2
Miami Fort	2832	5-1	35	34
Miami Fort	2832	5-2	35	34
Miami Fort	2832	6	398	390
Miami Fort	2832	7	1,044	1,022
Miami Fort	2832	8	1,015	994
Miami Fort	2832	CT2	1	1
Muskingum River	2872	1	309	302
Muskingum River	2872	2	316	309
Muskingum River	2872	3	347	340
Muskingum River	2872	4	349	342
Muskingum River	2872	5	1,105	1,082
Niles	2861	1	212	208
Niles	2861	2	160	157
Niles	2861	A	2	2
O. H. Hutchings	2848	H-1	24	23
O. H. Hutchings	2848	H-2	37	36
O. H. Hutchings	2848	H-3	64	63
O. H. Hutchings	2848	H-4	68	67
O. H. Hutchings	2848	H-5	62	61
O. H. Hutchings	2848	H-6	69	68
O. H. Hutchings	2848	H-7	1	1
Picway	2843	9	141	138
R. E. Burger	2864	1	0	0
R. E. Burger	2864	2	0	0
R. E. Burger	2864	3	0	0
R. E. Burger	2864	4	0	0
R. E. Burger	2864	5	14	14
R. E. Burger	2864	6	13	13
R. E. Burger	2864	7	337	330
R. E. Burger	2864	8	274	268
Richard Gorsuch	7286	1	146	143
Richard Gorsuch	7286	2	138	135
Richard Gorsuch	7286	3	144	141
Richard Gorsuch	7286	4	146	143
W. H. Sammis	2866	1	402	394
W. H. Sammis	2866	2	418	409
W. H. Sammis	2866	3	400	392
W. H. Sammis	2866	4	415	406
W. H. Sammis	2866	5	631	618
W. H. Sammis	2866	6	1,221	1,195
W. H. Sammis	2866	7	1,259	1,232
W. H. Zimmer	6019	1	2,918	2,857
Walter C. Beckjord	2830	1	167	163
Walter C. Beckjord	2830	2	198	194

Walter C. Beckjord	2830	3	281	275
Walter C. Beckjord	2830	4	347	340
Walter C. Beckjord	2830	5	481	471
Walter C. Beckjord	2830	6	850	832
Walter C. Beckjord	2830	CT1	3	3
Walter C. Beckjord	2830	CT2	3	3
Walter C. Beckjord	2830	CT3	4	4
Walter C. Beckjord d	2830	CT4	2	2
West Lorain	2869	1A	0	0
West Lorain	2869	1B	0	0
Woodsdale	7158	–GT1	30	29
Woodsdale	7158	–GT2	30	29
Woodsdale	7158	–GT3	39	38
Woodsdale	7158	–GT4	37	36
Woodsdale	7158	–GT5	40	39
Woodsdale	7158	–GT6	39	38
		Total	43,160	42,251

3745-14-05 Appendix B

Annual NOx allowance allocations for the ozone season in years 2004 through 2007 for regulated non-EGUs

Plant	County	Plant ID	Point ID	NOx allocation
AK Steel	Butler	1409010006	P009	66
AK Steel	Butler	1409010006	P010	66
AK Steel	Butler	1409010006	P011	66
AK Steel	Butler	1409010006	P012	66
Biomass Energy	Lawrence	0744000009	B003	106
Biomass Energy	Lawrence	0744000009	B004	106
Biomass Energy	Lawrence	0744000009	B007	106
BP Oil, Toledo Refinery	Lucas	0448020007	B004	39
BP Oil, Toledo Refinery	Lucas	0448020007	B020	101
Cargill	Montgomery	0857041124	B004	131
Cargill	Montgomery	0857041124	B006	1
Cognis	Hamilton	1431070035	B027	206
Goodyear Tire & Rubber	Summit	1677010193	B101	100
Goodyear Tire & Rubber	Summit	1677010193	B102	106
LTV Steel Company	Cuyahoga	1318001613	B001	137
LTV Steel Company	Cuyahoga	1318001613	B002	148
LTV Steel Company	Cuyahoga	1318001613	B003	157
LTV Steel Company	Cuyahoga	1318001613	B004	156
LTV Steel Company	Cuyahoga	1318001613	B007	153
LTV Steel Company	Cuyahoga	1318001613	B905	14
Mead	Ross	0671010028	B001	182
Mead	Ross	0671010028	B002	205
Mead	Ross	0671010028	B003	248
New Boston Coke Corp.	Scioto	0773010004	B008	20
New Boston Coke Corp.	Scioto	0773010004	B009	15
Premcor Refinery	Allen	0302020012	B026	16
Procter & Gamble	Hamilton	1431390903	B021	71
Procter & Gamble	Hamilton	1431390903	B022	292
Republic Engineered Steels	Lorain	0247080229	B013	157
Smart Papers	Butler	1409040212	B010	264
Sun Oil, Toledo Refinery	Lucas	0448010246	B044	47
W CI Steel	Trumbull	0278000463	B001	111
W CI Steel	Trumbull	0278000463	B002	29
W CI Steel	Trumbull	0278000463	B004	140
			Total	3,828

3745-14-06 **The NOx allowance tracking system.**

[Comment: For dates of non-regulatory government publications, publications of recognized organizations and associations, federal rules, and federal statutory provisions referenced in this rule, see the "Incorporation by Reference" section at the end of rule 3745-14-01 of the Administrative Code.]

(A) NOx allowance tracking system accounts.

(1) Consistent with paragraph (B)(1) of this rule, the administrator shall establish one compliance account for each NOx budget unit and one overdraft account for each source with two or more NOx budget units. Allocations of NOx allowances pursuant to rule 3745-14-05 or 3745-14-09 of the Administrative Code and deductions or transfers of NOx allowances pursuant to paragraphs (E) and (G) of this rule, paragraph (B) of rule 3745-14-04, and rules 3745-14-07 and 3745-14-09 of the Administrative Code shall be recorded in the compliance accounts or overdraft accounts in accordance with this rule.

(2) Consistent with paragraph (B)(2) of this rule, the administrator shall establish, upon request, a general account for any person. Transfers of allowances pursuant to rule 3745-14-07 of the Administrative Code shall be recorded in the general account in accordance with this rule.

(B) Establishment of accounts.

(1) Upon receipt of a complete account certificate of representation, the administrator shall establish:

(a) A compliance account for each NOx budget unit for which the account certificate of representation was submitted; and

(b) An overdraft account for each source for which the account certificate of representation was submitted and that has two or more NOx budget units.

(2) General accounts.

(a) Any person may apply to open a general account for the purpose of holding and transferring allowances. An application for a general account may designate one and only one NOx authorized account representative and one and only one alternate NOx authorized account representative who may act on behalf of the NOx authorized account representative. The agreement by which the alternate NOx authorized account representative is selected shall include a procedure for authorizing the alternate NOx authorized account representative to act in lieu of the NOx authorized account representative. A complete application for a general account shall be submitted to the

administrator and shall include the following elements in a format prescribed by the administrator:

(i) Name, mailing address, e-mail address (if any), telephone number, and facsimile transmission number (if any) of the NOx authorized account representative and any alternate NOx authorized account representative;

(ii) At the option of the NOx authorized account representative, organization name and type of organization;

(iii) A list of all persons subject to a binding agreement for the NOx authorized account representative or any alternate NOx authorized account representative to represent their ownership interest with respect to the allowances held in the general account;

(iv) The following certification statement by the NOx authorized account representative and any alternate NOx authorized account representative:

"I certify that I was selected as the NOx authorized account representative or the NOx alternate authorized account representative, as applicable, by an agreement that is binding on all persons who have an ownership interest with respect to NOx allowances held in the general account. I certify that I have all the necessary authority to carry out my duties and responsibilities under the NOx budget trading program on behalf of such persons and that each such person shall be fully bound by my representations, actions, inactions, or submissions and by any order or decision issued to me by the Administrator or a court regarding the general account."

(v) The signature of the NOx authorized account representative and any alternate NOx authorized account representative and the dates signed.

Unless otherwise required by the director or the administrator, documents of agreement referred to in the account certificate of representation shall not be submitted to the director or the administrator. Neither the director nor the administrator shall be under any obligation to review or evaluate the sufficiency of such documents, if submitted.

(b) Upon receipt by the administrator of a complete application for a general account under paragraph (B)(2)(a) of this rule:

(i) The administrator shall establish a general account for the person or persons for whom the application is submitted.

(ii) The NOx authorized account representative and any alternate NOx authorized account representative for the general account shall represent and, by his or her representations, actions, inactions, or submissions, legally bind each person who has an ownership interest with respect to NOx allowances held in the general account in all matters pertaining to the NOx budget trading program, notwithstanding any agreement between the NOx authorized account representative or any alternate NOx authorized account representative and such person. Any such person shall be bound by any order or decision issued to the NOx authorized account representative or any alternate NOx authorized account representative by the administrator or a court regarding the general account.

(iii) Any representation, action, inaction or submission by an alternate NOx authorized account representative shall be deemed to be a representation, action, inaction or submission by the NOx authorized account representative.

(iv) Each submission concerning the general account shall be submitted, signed, and certified by the NOx authorized account representative or any alternate NOx authorized account representative for the persons having an ownership interest with respect to NOx allowances held in the general account. Each such submission shall include the following certification statement by the NOx authorized account representative or any alternate NOx authorized account representative:

"I am authorized to make this submission on behalf of the persons having an ownership interest with respect to the NOx allowances held in the general account. I certify under penalty of law that I have personally examined, and am familiar with, the statements and information submitted in this document and all its attachments. Based on my inquiry of those individuals with primary responsibility for obtaining the information, I certify that the statements and information are to the best of my knowledge and belief true, accurate, and complete. I am aware that there are significant penalties for submitting false statements and information or omitting required statements and information, including the possibility of fine or imprisonment."

(v) The administrator shall accept or act on a submission concerning the general account only if the submission has been made, signed, and certified in accordance with paragraph (B)(2)(b)(iv) of this rule.

(c) Change of NOx authorized account representative or alternate NOx authorized account representative.

(i) The NOx authorized account representative for a general account may be changed at any time upon receipt by the administrator of a superseding complete application for a general account under paragraph (B)(2)(b) of this rule. Notwithstanding any such change, all representations, actions, inactions, and submissions by the previous NOx authorized account representative prior to the time and date when the administrator receives the superseding application for a general account shall be binding on the new NOx authorized account representative and the persons with an ownership interest with respect to the allowances in the general account.

(ii) The alternate NOx authorized account representative for a general account may be changed at any time upon receipt by the administrator of a superseding complete application for a general account under paragraph (B)(2)(b) of this rule. Notwithstanding any such change, all representations, actions, inactions, and submissions by the previous alternate NOx authorized account representative prior to the time and date when the administrator receives the superseding application for a general account shall be binding on the new alternate NOx authorized account representative and the persons with an ownership interest with respect to the allowances in the general account.

(d) Change in owners.

(i) In the event a new person having an ownership interest with respect to NOx allowances in the general account is not included in the list of such persons in the account certificate of representation, such new person shall be deemed to be subject to and bound by the account certificate of representation, the representation, actions, inactions, and submissions of the NOx authorized account representative and any alternate NOx authorized account representative of the source or unit, and the decisions, orders, actions, and inactions of the administrator, as if the new person were included in such list.

(ii) Within thirty days following any change in the persons having an ownership interest with respect to NOx allowances in the general account, including the addition of persons, the NOx authorized account representative or any alternate NOx authorized account representative shall submit a revision to the application for a general account amending the list of persons having an ownership interest with respect to the NOx allowances in the general account to include the change.

(e) Administrator's reliance on general account application.

(i) Once a complete application for a general account has been submitted and received, the administrator shall rely on the application unless and

until a superseding complete application for a general account is received by the administrator.

(ii) Except as provided in paragraph (B)(2)(d) of this rule, no objection or other communication submitted to the administrator concerning the authorization, or any representation, action, inaction, or submission of the NOx authorized account representative or any alternate NOx authorized account representative for a general account shall affect any representation, action, inaction, or submission of the NOx authorized account representative or any alternate NOx authorized account representative or the finality of any decision or order by the administrator under the NOx budget trading program.

(iii) The administrator shall not adjudicate any private legal dispute concerning the authorization or any representation, action, inaction, or submission of the NOx authorized account representative or any alternate NOx authorized account representative for a general account, including private legal disputes concerning the proceeds of NOx allowance transfers.

(3) The administrator shall assign a unique identifying number to each account established under paragraph (B)(1) or (B)(2) of this rule.

(C) NOx allowance tracking system responsibilities of the NOx authorized account representative.

(1) Following the establishment of a NOx allowance tracking system account, all submissions to the administrator pertaining to the account, including, but not limited to, submissions concerning the deduction or transfer of NOx allowances in the account, shall be made only by the NOx authorized account representative for the account.

(2) The administrator shall assign a unique identifying number to each NOx authorized account representative.

(D) Recording NOx allowance allocations.

(1) The administrator shall record the NOx allowances for 2004 in the NOx budget unit's compliance accounts and the allocation set-asides, as allocated under rule 3745-14-05 of this chapter. The administrator shall also record the NOx allowances allocated under paragraph (I)(1)(a) of rule 3745-14-09 of the Administrative Code for each NOx budget opt-in unit in its compliance account.

(2) Each year, after the administrator has made all deductions from a NOx budget unit's compliance account and the overdraft account pursuant to paragraph (E) of rule 3745-14-06 of the Administrative Code, the administrator shall record NOx

allowances, as allocated to the unit under rule 3745-14-05 of the Administrative Code or paragraph (I)(1)(b) of rule 3745-14-09 of the Administrative Code, in the compliance account for the year after the last year for which allowances were previously allocated to the compliance account. Each year, the administrator shall also record NOx allowances, as allocated under rule 3745-14-05 of the Administrative Code, in the allocation set-aside for the year after the last year for which allowances were previously allocated to an allocation set-aside.

(3) When allocating NOx allowances to and recording them in an account, the administrator shall assign each NOx allowance a unique identification number that shall include digits identifying the year for which the NOx allowance is allocated.

(E) Compliance.

(1) The NOx allowances are available to be deducted for compliance with a unit's NOx budget emissions limitation for a control period in a given year only if the NOx allowances:

(a) Were allocated for a control period in a prior year or the same year; and

(b) Are held in the unit's compliance account, or the overdraft account of the source where the unit is located, as of the NOx allowance transfer deadline for that control period or are transferred into the compliance account or overdraft account by a NOx allowance transfer correctly submitted for recording under paragraph (A) of rule 3745-14-07 of the Administrative Code by the NOx allowance transfer deadline for that control period.

(2) Deductions for compliance.

(a) Following the recording, in accordance with paragraph (B) of rule 3745-14-07 of the Administrative Code, of NOx allowance transfers submitted for recording in the unit's compliance account or the overdraft account of the source where the unit is located by the NOx allowance transfer deadline for a control period, the administrator shall deduct NOx allowances available under paragraph (E)(1) of this rule to cover the unit's NOx emissions, as determined in accordance with rule 3745-14-08 of the Administrative Code, or to account for actual utilization under paragraph (C)(5) of rule 3745-14-05 of the Administrative Code, for the control period as follows:

(i) From the compliance account; and

(ii) Only if no more NOx allowances available under paragraph (E)(1) of this rule remain in the compliance account, from the overdraft account. [In deducting allowances for units at the source from the overdraft

account, the administrator shall begin with the unit having the compliance account with the lowest NOx allowance tracking system account number and end with the unit having the compliance account with the highest NOx allowance tracking system account number. Account numbers shall be sorted beginning with the leftmost character and ending with the rightmost character and the letter characters assigned values in alphabetical order and less than all numeric characters.]

(b) The administrator shall deduct NOx allowances first under paragraph (E)(2)(a)(i) of this rule and then under paragraph (E)(2)(a)(ii) of this rule:

(i) Until the number of NOx allowances deducted for the control period equals the number of tons of NOx emissions, determined in accordance with rule 3745-14-08 of the Administrative Code, from the unit for the control period for which compliance is being determined, plus the number of NOx allowances required for deduction to account for actual utilization under paragraph (C)(5) of rule 3745-14-05 of the Administrative Code for the control period; or

(ii) Until no more NOx allowances available under paragraph (E)(1) of this rule remain in the respective account.

(3) Identification of NOx allowances by serial number.

(a) The NOx authorized account representative for each compliance account may identify by serial number the NOx allowances to be deducted from the unit's compliance account under paragraph (E)(2), (E)(4), (E)(5) or (E)(6) of this rule. Such identification shall be made in the compliance certification report submitted in accordance with paragraph (A) of rule 3745-14-04 of the Administrative Code.

(b) The administrator shall deduct NOx allowances for a control period from the compliance account, in the absence of an identification or in the case of a partial identification of NOx allowances by serial number under paragraph (E)(3)(a) of this rule, or the overdraft account on a first-in-first-out accounting basis in the following order:

(i) Those NOx allowances that were allocated for the control period to the unit under rule 3745-14-05 or 3745-14-09 of the Administrative Code;

(ii) Those NOx allowances that were allocated for the control period to any unit and transferred and recorded in the account pursuant to rule 3745-14-07 of the Administrative Code, in order of their recorded date;

(iii) Those NOx allowances that were allocated for a prior control period to the unit under rule 3745-14-05 or 3745-14-09 of the Administrative Code; and

(iv) Those NOx allowances that were allocated for a prior control period to any unit and transferred and recorded in the account pursuant to rule 3745-14-07 of the Administrative Code, in order of their recorded date.

(4) Deductions for excess emissions.

(a) After making the deductions for compliance under paragraph (E)(2) of this rule, the administrator shall deduct from the unit's compliance account or the overdraft account of the source where the unit is located a number of NOx allowances, allocated for a control period after the control period in which the unit has excess emissions, equal to three times the number of the unit's excess emissions.

(b) If the compliance account or overdraft account does not contain sufficient NOx allowances, the administrator shall deduct the required number of NOx allowances (i.e., three times the number of the unit's excess emissions) regardless of the control period for which they were allocated whenever NOx allowances are recorded in either account.

(c) Any allowance deduction required under paragraph (E)(4)(a) or (E)(4)(b) of this rule shall not affect the liability of the owners and operators of the NOx budget unit for any fine, penalty, or assessment, or their obligation to comply with any other remedy, for the same violation, as ordered under the Clean Air Act or applicable state law. The following guidelines shall be followed in assessing fines, penalties or other obligations:

(i) For purposes of determining the number of days of violation, if a NOx budget unit has excess emissions for a control period, each day in the control period constitutes a day in violation unless the owners and operators of the unit demonstrate that a lesser number of days should be considered;

(ii) Each ton of excess emissions is a separate violation.

(d) For a unit with excess emissions for the 2008 control period, the requirements of paragraphs (E)(4)(a) to (E)(4)(c) of this rule shall apply except that the administrator shall deduct, from the compliance account covering the unit in the CAIR NOx ozone season trading program (in lieu of the accounts listed in paragraphs (E)(4)(a) and (E)(4)(b) of this rule), CAIR NOx ozone season allowances (in lieu of NOx allowances under the NOx budget trading program).

(5) In the case of units sharing a common stack and having emissions that are not separately monitored or apportioned in accordance with rule 3745-14-08 of the Administrative Code:

(a) The NOx authorized account representative of the units may identify the percentage of NOx allowances to be deducted from each such unit's compliance account to cover the unit's share of NOx emissions from the common stack for a control period. Such identification shall be made in the compliance certification report submitted in accordance with paragraph (A) of rule 3745-14-04 of the Administrative Code.

(b) Notwithstanding paragraph (E)(2)(b)(i) of this rule, the administrator shall deduct NOx allowances for each such unit until the number of NOx allowances deducted equals the unit's identified percentage, under paragraph (E)(5)(a) of this rule, of the number of tons of NOx emissions, as determined in accordance with rule 3745-14-08 of the Administrative Code, from the common stack for the control period for which compliance is being determined or, if no percentage is identified, an equal percentage for each such unit, plus the number of allowances required for deduction to account for actual utilization under paragraph (C)(5) of rule 3745-14-05 of the Administrative Code for the control period.

(6) Each year starting in 2005, after the administrator has completed the designation of banked NOx allowances under paragraph (F)(1)(b) of this rule and before May first of the year, the administrator shall determine the extent to which banked NOx allowances otherwise available under paragraph (E)(1) of this rule are available for compliance in the control period for the current year, as follows:

(a) The administrator shall determine the total number of banked NOx allowances held in compliance accounts, overdraft accounts, or general accounts.

(b) If the total number of banked NOx allowances determined to be held in compliance accounts, overdraft accounts, or general accounts is less than or equal to ten per cent of the sum of the state trading program budgets for the control period, any banked NOx allowance may be deducted for compliance in accordance with paragraphs (E)(1) to (E)(5) of this rule.

(c) If the total number of banked NOx allowances determined to be held in compliance accounts, overdraft accounts, or general accounts exceeds ten per cent of the sum of the state trading program budgets for the control period, any banked allowance may be deducted for compliance in accordance with paragraphs (E)(1) to (E)(5) of this rule, except as follows:

(i) The administrator shall determine the following ratio: 0.10 multiplied by the sum of the state trading program budgets for the control period divided by the total number of banked NOx allowances determined to be held in compliance accounts, overdraft accounts, or general accounts.

(ii) The administrator shall multiply the number of banked NOx allowances in each compliance account or overdraft account by the ratio determined under paragraph (E)(6)(c)(i) of this rule. The resulting product is the number of banked NOx allowances in the account that may be deducted for compliance in accordance with paragraphs (E)(1) to (E)(5) of this rule. Any banked NOx allowances in excess of the resulting product may be deducted for compliance in accordance with paragraphs (E)(1) to (E)(5) of this rule, except that, if such NOx allowances are used to make a deduction under paragraphs (E)(2) to (E)(5) of this rule, two (rather than one) such NOx allowances shall authorize one ton of NOx emissions during the control period and must be deducted for each deduction of one NOx allowance required under paragraphs (E)(2) to (E)(5) of this rule.

(7) The administrator shall record in the appropriate compliance account or overdraft account all deductions from such an account pursuant to paragraphs (E)(2), (E)(4), (E)(5) and (E)(6) of this rule.

(F) Banking.

(1) NOx allowances shall be banked for future use or transfer in a compliance account, an overdraft account, or a general account, as follows:

(a) Any NOx allowance that is held in a compliance account, an overdraft account, or a general account shall remain in such account unless and until the NOx allowance is deducted or transferred pursuant to paragraphs (E) and (G) of this rule, paragraph (B) of rule 3745-14-04, and rules 3745-14-07 and 3745-14-09 of the Administrative Code.

(b) The administrator shall designate, as a "banked" NOx allowance, any NOx allowance that remains in a compliance account, an overdraft account, or a general account after the administrator has made all deductions for a given control period from the compliance account or overdraft account pursuant to paragraph (E) of this rule (except deductions pursuant to paragraph (E)(4)(b) of this rule) and that were allocated for that control period or a control period in a prior year.

(G) The administrator may, at his or her sole discretion and on his or her own motion, correct any error in any NOx allowance tracking system account. Within ten

business days of making such correction, the administrator shall notify the NOx authorized account representative for the account.

(H) Closing of general accounts.

(1) The NOx authorized account representative of a general account may instruct the administrator to close the account by submitting a statement requesting deletion of the account from the NOx allowance tracking system and by correctly submitting for recording, under paragraph (A) of rule 3745-14-07 of the Administrative Code, an allowance transfer of all NOx allowances in the account to one or more other NOx allowance tracking system accounts.

(2) If a general account shows no activity for a period of a year or more and does not contain any NOx allowances, the administrator shall notify the NOx authorized account representative for the account that the account will be closed and deleted from the NOx allowance tracking system following twenty business days after the notice is sent. The account shall be closed after the twenty-day period unless, before the end of the twenty-day period, the administrator receives a correctly submitted transfer of NOx allowances into the account under paragraph (A) of rule 3745-14-07 of the Administrative Code or a statement submitted by the NOx authorized account representative demonstrating to the satisfaction of the administrator good cause as to why the account should not be closed.

Effective: 10/18/2010

R.C. 119.032 review dates: 07/19/2013

CERTIFIED ELECTRONICALLY
Certification

10/08/2010
Date

Promulgated Under: 119.03
Statutory Authority: 3704.03(E)
Rule Amplifies: 3704.03(A), 3704.03(D), 3704.03(E)
Prior Effective Dates: 7/18/02, 11/24/03, 7/19/08

3745-14-07 **NOx allowance transfers.**

(A) Submission of NOx allowance transfers.

(1) The NOx authorized account representatives seeking recording of a NOx allowance transfer shall submit the transfer to the administrator. To be considered correctly submitted, the NOx allowance transfer shall include the following elements in a format specified by the administrator:

(a) The numbers identifying both the transferor and transferee accounts;

(b) A specification by serial number of each NOx allowance to be transferred; and

(c) The printed name and signature of the NOx authorized account representative of the transferor account and the date signed.

(B) Recordation of NOx allowance transfer requests.

(1) Within five business days of receiving a NOx allowance transfer, except as provided in paragraph (B)(2) of this rule, the administrator shall record a NOx allowance transfer by moving each NOx allowance from the transferor account to the transferee account as specified by the request, provided that:

(a) The transfer is correctly submitted under paragraph (A) of this rule; and

(b) The transferor account includes each NOx allowance identified by serial number in the transfer.

(2) A NOx allowance transfer that is submitted for recording following the NOx allowance transfer deadline and that includes any NOx allowances allocated for a control period prior to or the same as the control period to which the NOx allowance transfer deadline applies shall not be recorded until after completion of the process of recording of NOx allowance allocations in paragraph (D) of rule 3745-14-06 of the Administrative Code.

(3) Where a NOx allowance transfer submitted for recording fails to meet the requirements of paragraph (B)(1) of this rule, the administrator shall not record such transfer.

(C) Notification of transfers recorded.

(1) Within five business days of recording a NOx allowance transfer under paragraph (B) of this rule, the administrator shall notify the NOx authorized account representative of both the transferor and transferee accounts.

(2) Within ten business days of receipt of a NOx allowance transfer that fails to meet the requirements of paragraph (B)(1) of this rule, the administrator shall notify the NOx authorized account representatives of both accounts subject to the transfer of:

(a) A decision not to record the transfer, and

(b) The reasons for not recording the transfer.

(3) Nothing in this rule shall preclude the re-submission of a NOx allowance transfer for recording that failed to meet the requirements of paragraph (B)(1) of this rule upon a previous submission.

Effective: 7/18/2002

R.C. 119.032 review dates: 04/10/2008 and 04/10/2013

CERTIFIED ELECTRONICALLY
Certification

04/10/2008
Date

Promulgated Under: 119.03
Statutory Authority: 3704.03(E)
Rule Amplifies: 3704.03(A), 3704.03(D), 3704.03(E)
Prior Effective Dates: 6/21/94, 7/18/02

3745-14-08 **Monitoring and reporting.**

[Comment: For dates of non-regulatory government publications, publications of recognized organizations and associations, federal rules, and federal statutory provisions referenced in this rule, see the "Incorporation by Reference" section at the end of rule 3745-14-01 of the Administrative Code.]

(A) General requirements.

(1) The owners and operators, and to the extent applicable, the NOx authorized account representative of a NOx budget unit, shall comply with the monitoring and reporting requirements as provided in this rule and in 40 CFR Part 75, Subpart H. For purposes of complying with such requirements, the definitions in paragraph (B) of rule 3745-14-01 of the Administrative Code and in 40 CFR 72.2 shall apply, and the terms "affected unit," "designated representative," and "continuous emission monitoring system" (or "CEMS") in 40 CFR Part 75 shall be replaced by the terms "NOx budget unit," "NOx authorized account representative, " and "continuous emission monitoring system" (or "CEMS"), respectively, as defined in paragraph (B) of rule 3745-14-01 of the Administrative Code.

(2) The owner or operator of each NOx budget unit and each unit for which an application for a NOx budget opt-in permit is submitted and not denied or withdrawn, as provided in rule 3745-14-09 of the Administrative Code, shall meet the following requirements:

(a) Install all monitoring systems required under this rule for monitoring NOx mass emissions; (This includes all systems required to monitor NOx emission rate, NOx concentration, heat input rate, and stack flow rate, in accordance with 40 CFR 75.71 and 40 CFR 75.72.)

(b) Install all monitoring systems for monitoring heat input rate;

(c) Successfully complete all certification tests required under paragraph (B) of this rule and meet all other requirements of this rule and 40 CFR Part 75 applicable to the monitoring systems under paragraphs (A)(2)(a) and (A)(2)(b) of this rule; and

(d) Record, report and quality assure the data from the monitoring systems required under paragraphs (A)(2)(a) and (A)(2)(b) of this rule.

(3) The owner or operator shall meet the certification and other requirements of paragraphs (A)(2)(a) to (A)(2)(c) of this rule on or before the following dates. The owner or operator shall record, report and quality-assure the data from the

monitoring systems under paragraphs (A)(2)(a) and (A)(2)(b) of this rule on and after the following dates:

(a) For the owner or operator of a NOx budget unit for which the owner or operator intends to apply for early reduction credit under paragraph (D) of rule 3745-14-05 of the Administrative Code, by May 1, 2000;

(b) For the owner or operator of a NOx budget unit under paragraph (C)(1) of rule 3745-14-01 of the Administrative Code that commences operation before January 1, 2003, and that is not subject to or does not meet the deadline under paragraph (A)(3)(a) of this rule, by May 1, 2003;

(c) For the owner or operator of a NOx budget unit under paragraph (C)(1)(a) of rule 3745-14-01 of the Administrative Code that commences operation on or after January 1, 2003 and that reports on an annual basis under paragraph (E)(4) of this rule, by the later of the following dates;

(i) May 1, 2003; or

(ii) Ninety days after the date on which the unit commences commercial operation.

(d) For the owner or operator of a NOx budget unit under paragraph (C)(1)(a) of rule 3745-14-01 of the Administrative Code that commences operation on or after January 1, 2003 and that reports on a control period basis under paragraph (E)(4)(b)(i) of this rule, by no later than ninety days after the date on which the unit commences commercial operation, provided that this date is during a control period; (If this date does not occur during a control period, the applicable deadline is May first immediately following this date.)

(e) For the owner or operator of a NOx budget unit under paragraph (C)(1)(b) of rule 3745-14-01 of the Administrative Code that commences operation on or after January 1, 2003 and that reports on an annual basis under paragraph (E)(4) of this rule, by the later of the following dates:

(i) May 1, 2003; or

(ii) One hundred eighty days after the date on which the unit commences operation.

(f) For the owner or operator of a NOx budget unit under paragraph (C)(1)(b) of rule 3745-14-01 of the Administrative Code that commences operation on or after January 1, 2003 and that reports on a control period basis under paragraph (E)(4)(b)(ii) of this rule, by one hundred eighty days after the date on which the unit commences operation, provided that this date is

during a control period; (If this date does not occur during a control period, the applicable deadline is May first immediately following this date.)

(g) For the owner or operator of a NOx budget unit that has a new stack or flue for which construction is completed after the applicable deadline under paragraph (A)(3)(a), (A)(3)(b), (A)(3)(c), (A)(3)(d), (A)(3)(e) or (A)(3)(f) of this rule or rule 3745-14-09 of the Administrative Code and that reports on an annual basis under paragraph (E)(4) of this rule, by ninety days after the date on which emissions first exit to the atmosphere through the new stack or flue;

(h) For the owner or operator of a NOx budget unit that has a new stack or flue for which construction is completed after the applicable deadline under paragraph (A)(3)(a), (A)(3)(b), (A)(3)(c), (A)(3)(d), (A)(3)(e) or (A)(3)(f) of this rule or rule 3745-14-09 of this chapter and that reports on a control period basis under paragraph (E)(4)(b)(ii) of this rule, by ninety days after the date on which emissions first exit to the atmosphere through the new stack or flue, provided that this date is during a control period; (If this date does not occur during a control period, the applicable deadline is May first immediately following this date.)

(i) For the owner or operator of a unit for which an application for a NOx budget opt-in unit is submitted and not denied or withdrawn, by the date specified under rule 3745-14-09 of this chapter.

(4) Reporting data prior to initial certification.

The owner or operator of a NOx budget unit under paragraph (A)(3)(c), (A)(3)(d), (A)(3)(e) or (A)(3)(f) of this rule shall determine, record and report NOx mass emissions, heat input rate, and any other values required to determine NOx mass emissions (e.g., NOx emission rate and heat input rate, or NOx concentration and stack flow rate) in accordance with 40 CFR 75.70(g), from the date and hour that the unit starts operating until the date and hour on which the continuous emission monitoring system, excepted monitoring system under 40 CFR Part 75, Appendix D or 40 CFR Part 75 Appendix E, or excepted monitoring methodology under 40 CFR 75.19, is provisionally certified.

(5) Prohibitions.

(a) No owner or operator of a NOx budget unit shall use any alternative monitoring system, alternative reference method, or any other alternative for the required continuous emission monitoring system without having obtained prior written approval in accordance with paragraph (F) of this rule.

(b) No owner or operator of a NOx budget unit shall operate the unit so as to discharge, or allow to be discharged, NOx emissions to the atmosphere without accounting for all such emissions in accordance with the applicable provisions of this rule and 40 CFR Part 75 except as provided for in 40 CFR 75.74.

(c) No owner or operator of a NOx budget unit shall disrupt the continuous emission monitoring system, any portion thereof, or any other approved emission monitoring method, and thereby avoid monitoring and recording NOx mass emissions discharged into the atmosphere, except for periods of recertification or periods when calibration, quality assurance testing, or maintenance is performed in accordance with the applicable provisions of this rule and 40 CFR Part 75 except as provided for in 40 CFR 75.74.

(d) No owner or operator of a NOx budget unit shall retire or permanently discontinue use of the continuous emission monitoring system, any component thereof, or any other approved emission monitoring system, except under any one of the following circumstances:

(i) During the period that the unit is covered by an exemption under paragraphs (C)(2) and (D) of rule 3745-14-01 of the Administrative Code that is in effect;

(ii) The owner or operator is monitoring emissions from the unit with another certified monitoring system approved by the director, in accordance with the applicable provisions of this rule and 40 CFR Part 75, for use at that unit that provides emission data for the same pollutant or parameter as the retired or discontinued monitoring system; or

(iii) The NOx authorized account representative submits notification of the date of certification testing of a replacement monitoring system for the retired or discontinued monitoring system in accordance with paragraph (B)(2)(b) of this rule.

(B) Initial certification and recertification procedures.

(1) The owner or operator of a NOx budget unit that is subject to an acid rain emissions limitation shall comply with the initial certification and recertification procedures of 40 CFR Part 75, except that:

(a) If, prior to January 1, 1998, the administrator approved a petition under 40 CFR 75.17(a) or 40 CFR 75.17(b) for apportioning the NOx emission rate measured in a common stack or a petition under 40 CFR 75.66 for an alternative to a requirement in 40 CFR 75.17, the NOx authorized account representative shall resubmit the petition, under paragraph (F)(1) of this

rule, to the administrator to determine if the approval applies under the NOx budget trading program;

(b) For any additional CEMS required under the common stack provisions in 40 CFR 75.72, or for any NOx concentration CEMS used under the provisions of 40 CFR 75.71(a)(2), the owner or operator shall meet the requirements of paragraph (B)(2) of this rule.

(2) The owner or operator of a NOx budget unit that is not subject to an acid rain emissions limitation shall comply with the following initial certification and recertification procedures. The owner or operator of such a unit that qualifies to use the low mass emissions excepted monitoring methodology under 40 CFR 75.19 or that qualifies to use an alternative monitoring system under subpart E of 40 CFR Part 75 shall comply with the following procedures, as modified by paragraph (B)(3) or (B)(4) of this rule. The owner or operator of a NOx budget unit that is subject to an acid rain emissions limitation and that requires additional CEMS under the common stack provisions in 40 CFR 75.72 or uses a NOx concentration CEMS under 40 CFR 75.71(a)(2) shall comply with the following.

(a) The owner or operator shall ensure that each monitoring system required by 40 CFR Part 75, Subpart H (which includes the automated data acquisition and handling system) successfully completes all of the initial certification testing required under 40 CFR 75.20 by the applicable deadline in paragraph (A)(3) of this rule. In addition, whenever the owner or operator installs a monitoring system in order to meet the requirements of this chapter in a location where no such monitoring system was previously installed, initial certification according to 40 CFR 75.20 is required.

(b) Whenever the owner or operator makes a replacement, modification, or change in a certified monitoring system that may significantly affect the ability of the system to accurately measure or record NOx mass emissions or heat input rate or to meet the requirements of 40 CFR 75.21 or Appendix B to 40 CFR Part 75, the owner or operator shall recertify the monitoring system in accordance with 40 CFR 75.20(b). Furthermore, whenever the owner or operator makes a replacement, modification, or change to the flue gas handling system or the unit's operation that may significantly change the stack flow or concentration profile, the owner or operator shall recertify the continuous emissions monitoring system in accordance with 40 CFR 75.20(b). Examples of changes that require recertification include: replacement of the analyzer, complete replacement of an existing continuous emission monitoring system, or change in location or orientation of the sampling probe or site.

(c) Certification approval process for initial certifications and recertification.

(i) The NOx authorized account representative shall submit to the administrator, the United States environmental protection agency region 5 office, and the director a written notice of the dates of certification in accordance with paragraph (D) of this rule.

(ii) The NOx authorized account representative shall submit to the administrator, the United States environmental protection agency region 5 office, and director a certification application for each monitoring system required under 40 CFR Part 75, Subpart H. A complete certification application shall include the information specified in. 40 CFR Part 75, Subpart H.

(iii) Except for units using the low mass emission excepted methodology under 40 CFR 75.19, the provisional certification date for a monitor shall be determined in accordance with 40 CFR 75.20(a)(3). A provisionally certified monitor may be used under the NOx budget trading program for a period not to exceed one hundred twenty days after receipt by the director of the complete certification application for the monitoring system or component thereof under paragraph (B)(2)(c)(ii) of this rule. Data measured and recorded by the provisionally certified monitoring system or component thereof, in accordance with the requirements of 40 CFR Part 75, shall be considered valid quality-assured data (retroactive to the date and time of provisional certification), provided that the director does not invalidate the provisional certification by issuing a notice of disapproval within one hundred twenty days of receipt of the complete certification application by the director.

(iv) The director shall issue a written notice of approval or disapproval of the certification application to the owner or operator within one hundred twenty days of receipt of the complete certification application under paragraph (B)(2)(c)(ii) of this rule. In the event the director does not issue such a notice within such one hundred twenty-day period, each monitoring system that meets the applicable performance requirements of 40 CFR Part 75 and is included in the certification application shall be deemed certified for use under the NOx budget trading program.

(a) If the certification application is complete and shows that each monitoring system meets the applicable performance requirements of 40 CFR Part 75, then the director shall issue a written notice of approval of the certification application within one hundred twenty days of receipt.

(b) A certification application shall be considered complete when all of the applicable information required to be submitted under

paragraph (B)(2)(c)(ii) of this rule has been received by the director. If the certification application is not complete, then the director shall issue a written notice of incompleteness that sets a reasonable date by which the NOx authorized account representative shall submit the additional information required to complete the certification application. If the NOx authorized account representative does not comply with the notice of incompleteness by the specified date, then the director may issue a notice of disapproval under paragraph (B)(2)(c)(iv)(c) of this rule. The one hundred twenty-day review period shall not begin prior to receipt of a complete certification application.

(c) If the certification application shows that any monitoring system or component thereof does not meet the performance requirements of this chapter, or if the certification application is incomplete and the requirement for disapproval under paragraph (B)(2)(c)(iv)(b) of this rule has been met, then the director shall issue a written notice of disapproval of the certification application. Upon issuance of such notice of disapproval, the provisional certification is invalidated by the director and the data measured and recorded by each uncertified monitoring system or component thereof shall not be considered valid quality-assured data beginning with the date and hour of provisional certification [as defined under 40 CFR 75.20(a)(3)]. The owner or operator shall follow the procedures for loss of certification in paragraph (B)(2)(c)(v) of this rule for each monitoring system or component thereof which is disapproved for initial certification.

(d) The director may issue a notice of disapproval of the certification status of a monitor in accordance with paragraph (C)(2) of this rule.

(v) If the director issues a notice of disapproval of a certification application under paragraph (B)(2)(c)(iv)(c) of this rule or a notice of disapproval of certification status under paragraph (B)(2)(c)(iv)(d) of this rule, then:

(a) The owner or operator shall substitute the following values, for each hour of unit operation during the period of invalid data specified under 40 CFR 75.20(a)(4)(iii), 40 CFR 75.20(b)(5), 40 CFR 75.20(h)(4) or 40 CFR 75.21(e) and continuing until the date and hour specified under 40 CFR75.20(a)(5)(i):

(i) For units that the owner or operator intends to monitor or monitors for NOx emission rate and heat input or intends to determine or determines NOx mass emissions using the low mass emission excepted methodology under 40 CFR 75.19,

the maximum potential NOx emission rate and the maximum potential hourly heat input of the unit;

(ii) For units that the owner or operator intends to monitor or monitors for NOx mass emissions using a NOx pollutant concentration monitor and a flow monitor, the maximum potential concentration of NOx and the maximum potential flow rate of the unit under Section 2 of Appendix A of 40 CFR Part 75.

(b) The NOx authorized account representative shall submit a notification of certification retest dates and a new certification application in accordance with paragraphs (B)(2)(c)(i) and (B)(2)(c)(ii) of this rule;

(c) The owner or operator shall repeat all certification tests or other requirements that were failed by the monitoring system, as indicated in the director's notice of disapproval, no later than thirty unit operating days after the date of issuance of the notice of disapproval.

(3) The owner or operator of a gas fired or oil fired unit using the low mass emissions excepted methodology under 40 CFR 75.19 and not subject to an acid rain emission limitation shall meet the applicable general operating requirements of 40 CFR 75.10 and the applicable requirements of 40 CFR 75.19. The owner or operator of such a unit shall also meet the applicable certification and recertification procedures of paragraph (B)(2) of this rule, except that the excepted methodology shall be deemed provisionally certified for use under the NOx budget trading program as of the following dates:

(a) For a unit that does not have monitoring equipment initially certified or recertified for the NOx budget trading program as of the date on which the NOx authorized account representative submits the certification application under 40 CFR 75.19 for the unit, starting on the date of such submissions until the completion of the period for the director's review;

(b) For a unit that has monitoring equipment initially certified or recertified for the NOx budget trading program as of the date on which the NOx authorized account representative submits the certification application under 40 CFR 75.19 for the unit and that reports data on an annual basis under paragraph (E)(4) of this rule, starting January first of the year after the year of such submission until the completion of the period for the director' review;

(c) For a unit that has monitoring equipment initially certified or recertified for the NOx budget trading program as of the date on which the NOx

authorized account representative submits the certification application under 40 CFR 75.19 for the unit and that reports on a control period basis under paragraph (E)(4) of this rule, starting May first of the control period after the year of such submission until the completion of the period for the director's review.

(4) The NOx authorized account representative of each unit not subject to an acid rain emissions limitation for which the owner or operator intends to use an alternative monitoring system approved by the administrator under subpart E of 40 CFR Part 75, shall comply with the applicable certification procedures in paragraph (B)(2) of this rule before using the system under the NOx budget trading program. The NOx authorized account representative shall also comply with the applicable recertification procedures in paragraph (B)(2)(c) of this rule. The requirements of 40 CFR 75.20(f) shall apply to such alternative monitoring system.

(C) Out of control periods.

(1) Whenever any monitoring system fails to meet the quality assurance or data validation requirements of 40 CFR Part 75, data shall be substituted using the applicable procedures in 40 CFR Part 75, Appendix D , 40 CFR Part 75, Appendix E, or 40 CFR Part 75, Subpart D

(2) Whenever both an audit of a monitoring system and a review of the initial certification or recertification application reveal that any system or component should not have been certified or recertified because it did not meet a particular performance specification or other requirement under paragraph (B) of this rule or the applicable provisions of 40 CFR Part 75, both at the time of the initial certification or recertification application submission and at the time of the audit, the director shall issue a notice of disapproval of the certification status of such system or component. For the purposes of this paragraph, an audit shall be either a field audit or an audit of any information submitted to the director or the administrator. By issuing the notice of disapproval, the director revokes prospectively the certification status of the system or component. The data measured and recorded by the system or component shall not be considered valid quality-assured data from the date of issuance of the notification of the revoked certification status until the date and time that the owner or operator completes subsequently approved initial certification or recertification tests for the system or component.

(D) The NOx authorized account representative for a NOx budget unit shall submit written notice of certification and recertification test dates to the director and the administrator in accordance with 40 CFR 75.61, except that if a unit is not subject to an acid rain emission limitation, notification is only required to be sent to the director.

(E) Record keeping and reporting.

(1) General provisions

(a) The NOx authorized account representative shall comply with all record keeping and reporting requirements in this rule and with the requirements of paragraph (A)(5) of rule 3745-14-02 of the Administrative Code.

(b) If the NOx authorized account representative for a NOx budget unit subject to an acid rain emission limitation who signed and certified any submission that is made under 40 CFR Part 75, Subpart F or 40 CFR Part 75, Subpart G and which includes data and information required under this rule or 40 CFR Part 75, Subpart H is not the same person as the designated representative or the alternative designated representative for the unit under 40 CFR Part 72, then the submission shall also be signed by the designated representative or the alternative designated representative.

(2) Monitoring plans.

(a) The owner or operator of a unit subject to an acid rain emissions limitation shall comply with the requirements of 40 CFR 75.62, except that the monitoring plan shall also include all of the information required by 40 CFR Part 75, Subpart H.

(b) The owner or operator of a unit that is not subject to an acid rain emissions limitation shall comply with the requirements of 40 CFR 75.62, except that the monitoring plan is only required to include the information required by 40 CFR Part 75, Subpart H.

(3) The NOx authorized account representative shall submit an application to the administrator, United States environmental protection agency region 5 office, and the director within forty-five days after completing all initial certification or recertification tests required under paragraph (B) of this rule including the information required under 40 CFR Part 75, Subpart H.

(4) The NOx authorized account representative shall submit quarterly reports as follows:

(a) If a unit is subject to an acid rain emission limitation or if the owner or operator of the NOx budget unit chooses to meet the annual reporting requirements of this rule, the NOx authorized account representative shall submit a quarterly report for each calendar quarter beginning with:

(i) For a unit for which the owner or operator intends to apply or applies for the early reduction credit under paragraph (D) of rule 3745-14-05 of the Administrative Code, the calendar quarter that includes the date of

initial provisional certification under paragraph (B)(2)(c)(iii) or (B)(3) of this rule. Data shall be reported from the date and hour corresponding to the date and hour of provisional certification; or

(ii) For a unit that commences operation on or before May 1, 2003 and that is not subject to paragraph (E)(4)(a)(i) of this rule, the earlier of the calendar quarter that includes the date of initial provisional certification under paragraph (B)(2)(c)(iii) or (B)(3) of this rule or, if the certification tests are not completed by May 1, 2003, the calendar quarter covering May 1, 2003 through June 30, 2003 Data shall be recorded and reported from the earlier of the date and hour corresponding to the date and hour of provisional certification or the first hour on May 1, 2003; or

(iii) For a unit that commences operation after May 1, 2003, the calendar quarter in which the unit commences operation. Data shall be reported from the date and hour corresponding to when the unit commenced operation.

(b) If a NOx budget unit is not subject to an acid rain emission limitation, then the NOx authorized account representative shall either:

(i) Meet all of the requirements of 40 CFR Part 75 related to monitoring and reporting NOx mass emissions during the entire year and meet the reporting deadlines specified in paragraph (E)(4)(a) of this rule; or

(ii) Submit quarterly reports covering the period May first through September thirtieth of each year and including the data described in 40 CFR 75.74(c)(6). The NOx authorized account representative shall submit such quarterly reports, beginning with:

(a) For a unit for which the owner or operator intends to apply or applies for early reduction credit under paragraph (D) of rule 3745-14-05 of the Administrative Code, the calendar quarter that includes the date of initial provisional certification under paragraph (B)(2)(c)(iii) or (B)(3) of this rule. Data shall be recorded and reported from the date and hour corresponding to the date and hour of provisional certification; or

(b) For a unit that commences operation on or before May 1, 2003 and that is not subject to paragraph (E)(4)(b)(i) of this rule, the calendar quarter covering May 1, 2003 through June 30, 2003. 2003 Data shall be recorded and reported from the earlier of the date and hour corresponding to the date and hour of initial certification under paragraph (B)(2)(c)(iii) or (B)(3) of this rule or the first hour of May 1, 2003; or

(c) For a unit that commences operation after May 1, 2003 and during a control period, the calendar quarter in which the unit commences operation. Data shall be reported from the date and hour corresponding to when the unit commences operation; or

(d) For a unit that commences operation after May 1, 2003 and not during a control period, the calendar quarter covering the first control period after the unit commences operation. Data shall be recorded and reported from the earlier of the date and hour corresponding to the date and hour of initial provisional certification under paragraph (B)(2)(c)(iii) or (B)(3) of this rule or the first hour of May first of the first control period after the unit commences operation.

(c) The NOx authorized account representative shall submit each quarterly report to the administrator within thirty days following the end of the calendar quarter covered by the report. Quarterly reports shall be submitted in the manner specified in 40 CFR Part 75, Subpart H and 40 CFR 75.64.

(i) For units subject to an acid rain emissions limitation, quarterly reports shall include all of the data and information required in 40 CFR Part 75, Subpart H for each NOx budget unit (or group of units using a common stack) and the data and information required in 40 CFR Part 75, Subpart G.

(ii) For units not subject to an acid rain emissions limitation, quarterly reports are only required to include all of the data and information required in 40 CFR Part 75, Subpart H for each NOx budget unit (or group of units using a common stack).

(d) The NOx authorized account representative shall submit to the administrator a compliance certification in support of each quarterly report based on reasonable inquiry of those persons with primary responsibility for ensuring that all of the unit's' emissions are correctly and fully monitored. The compliance certification shall state that:

(i) The monitoring data submitted were recorded in accordance with the applicable requirements of this rule and 40 CFR Part 75, including the quality assurance procedures and specifications;

(ii) For a unit with add-on NOx emission controls and for all hours where data are substituted in accordance with 40 CFR 75.34(a)(1), the add-on emission controls were operating within the range of parameters listed in the quality assurance/quality control program under 40 CFR Part 75,

Appendix B and the substitute values do not systematically underestimate NOx emissions; and

(iii) For a unit that is reporting on a control period basis under paragraph (E)(4)(d)(ii) of this rule, the NOx emission rate and NOx concentration values substituted for missing data under 40 CFR Part 75, Subpart D are calculated using only values from a control period and do not systematically underestimate NOx emissions.

(F) Petitions.

(1) The NOx authorized account representative of a NOx budget unit that is subject to an acid rain emission limitation may submit a petition under 40 CFR75.66 to the administrator requesting approval to apply an alternative to any requirement of this rule.

(a) Application of an alternative to any requirement of this rule shall be in accordance with this rule only to the extent that the petition is approved by the administrator in consultation with the director.

(b) Notwithstanding paragraph (F)(1)(a) of this rule, if the petition requests approval to apply an alternative to a requirement concerning any additional CEMS required under the common stack provisions of 40 CFR75.72, the petition shall be governed by paragraph (F)(2) of this rule.

(2) The NOx authorized account representative of a NOx budget unit that is not subject to an acid rain emission limitation may submit a petition under 40 CFR 75.66 to the director and the administrator requesting approval to apply an alternative to any requirement of this rule.

(a) The NOx authorized account representative of a NOx budget unit that is subject to an acid rain emission limitation may submit a petition under 40 CFR 75.66 to the director and the administrator requesting approval to apply an alternative to a requirement concerning any additional CEMS required under the common stack provisions of 40 CFR 75.72 or a NOx concentration CEMS used under 40 CFR 75.71(a)(2).

(b) Application of an alternative to any requirement of this rule shall be in accordance with this rule only to the extent the petition under paragraph (F)(2) of this rule is approved by both the director and the administrator.

(G) Additional requirements to provide heat input data for allocation purposes.

The owner or operator of a NOx budget unit that monitors and reports NOx mass emissions using a NOx concentration system and a flow system shall also monitor

and report heat input rate at the unit level using the procedures set forth in 40 CFR Part 75.

Effective: 07/19/2008

R.C. 119.032 review dates: 04/10/2008 and 07/19/2013

CERTIFIED ELECTRONICALLY
Certification

07/09/2008
Date

Promulgated Under: 119.03
Statutory Authority: 3704.03(E)
Rule Amplifies: 3704.03(A), 3704.03(D), 3704.03(E)
Prior Effective Dates: 7/18/02

3745-14-09 **NOx budget opt-in units.**

(A) A unit that is not a NOx budget unit under paragraph (C) of rule 3745-14-01 of the Administrative Code, vents all of its emissions to a stack, and is operating, may qualify, under this rule, to become a NOx budget opt-in unit. A unit that is a NOx budget unit under paragraph (C) of rule 3745-14-01 of the Administrative Code, is covered by a retired unit exemption under paragraph (D) of rule 3745-14-01 of the Administrative Code that is in effect, or is not operating is not eligible to become a NOx budget opt-in unit.

(B) Except as otherwise provided in this chapter, a NOx budget opt-in unit shall be treated as a NOx budget unit for purposes of applying rules 3745-14-01 to 3745-14-08 and 3745-14-10 of the Administrative Code.

(C) A unit for which an application for a NOx budget opt-in permit is submitted and not denied or withdrawn, or a NOx budget opt-in unit, located at the same source as one or more NOx budget units, shall have the same NOx authorized account representative as such NOx budget units.

(D) Applying for a NOx budget opt-in permit.

(1) In order to apply for an initial NOx budget opt-in permit, the NOx authorized account representative of a unit qualified under paragraph (A) of this rule may submit the following to the director at any time, except as provided under paragraph (G)(7) of this rule:

(a) A complete NOx budget permit application under paragraph (C) of rule 3745-14-03 of the Administrative Code;

(b) A monitoring plan submitted in accordance with paragraph (E)(2) of rule 3745-14-08 of the Administrative Code; and

(c) A complete account certificate of representation under paragraph (D) of rule 3745-14-02 of the Administrative Code, if no NOx authorized account representative has been previously designated for the unit.

(2) The NOx authorized account representative of a NOx budget opt-in unit shall submit a complete NOx budget permit application under paragraph (C) of rule 3745-14-03 of the Administrative Code to renew the NOx budget opt-in permit in accordance with paragraph (B)(3) of rule 3745-14-03 of the Administrative Code and, if applicable, an updated monitoring plan in accordance with rule 3745-14-08 of the Administrative Code.

(E) The director shall issue or deny a NOx budget opt-in permit for a unit for which an initial application for a NOx budget opt-in permit is submitted, in accordance with paragraph (A) of rule 3745-14-03 of the Administrative Code and the following:

(1) The director shall determine, on an interim basis, the sufficiency of the monitoring plan accompanying the initial application for a NOx budget opt-in permit. A monitoring plan is sufficient, for purposes of interim review, if the plan appears to contain information demonstrating that the NOx emissions rate and heat input of the unit are monitored and reported in accordance with rule 3745-14-08 of the Administrative Code. A determination of sufficiency shall not be construed as acceptance or approval of the unit's monitoring plan.

(2) If the director determines that the unit's monitoring plan is sufficient under paragraph (E)(1) of this rule and after completion of monitoring system certification under rule 3745-14-08 of the Administrative Code, the NOx emissions rate and the heat input of the unit shall be monitored and reported in accordance with rule 3745-14-08 of the Administrative Code for one full control period during which per cent monitor data availability is not less than ninety per cent and during which the unit is in full compliance with any applicable state or federal emissions or emission-related requirements. Solely for purposes of applying the requirements in the prior sentence, the unit shall be treated as a NOx budget unit prior to issuance of a NOx budget opt-in permit covering the unit.

(3) Based on the information monitored and reported under paragraph (E)(2) of this rule, the units baseline heat rate shall be calculated as the unit's total heat input (in mmBtu) for the control period and the units baseline NOx emissions rate shall be calculated as the unit's total NOx emissions (in pounds) for the control period divided by the units baseline heat rate.

(4) After calculating the baseline heat input and the baseline NOx emissions rate for the unit under paragraph (E)(3) of this rule, the director shall issue a draft NOx budget opt-in permit for the unit in accordance with paragraph (A) of rule 3745-14-03 of the Administrative Code.

(5) Notwithstanding paragraphs (E)(1) to (E)(4) of this rule, if at any time before issuance of a draft NOx budget opt-in permit for the unit, the director determines that the unit does not qualify as a NOx budget opt-in unit under paragraph (A) of this rule, the director shall issue a draft denial of a NOx budget opt-in permit for the unit in accordance with paragraph (A) of rule 3745-14-03 of the Administrative Code.

(6) A NOx authorized account representative of a unit may withdraw its application for a NOx budget opt-in permit under paragraph (D) of this rule at any time prior to the issuance of the final NOx budget opt-in permit. Once the application for a NOx budget opt-in permit is withdrawn, a NOx authorized

account representative wanting to reapply shall submit a new application for a NOx budget permit under paragraph (D) of this rule.

(7) The effective date of the initial NOx budget opt-in permit shall be May first of the first control period starting after the issuance of the initial NOx budget opt-in permit by the director. The unit shall be a NOx budget opt-in unit and a NOx budget unit as of the effective date of the initial NOx budget opt-in permit.

(F) NOx budget opt-in permit contents.

(1) Each NOx budget opt-in permit shall contain all elements required under paragraph (C) of rule 3745-14-03 of the Administrative Code.

(2) Each NOx budget opt-in permit is deemed to incorporate automatically the definitions of terms under paragraph (B) of rule 3745-14-01 of the Administrative Code and, upon recordation by the Administrator, under this rule and rule 3745-14-06 of the Administrative Code, every allocation, transfer, or deduction of NOx allowances to or from the compliance accounts of each NOx budget opt-in unit covered by the NOx budget opt-in permit or the overdraft account of the NOx budget source where the NOx budget opt-in unit is located.

(G) Withdrawal of opt-in units from NOx budget trading program.

(1) To withdraw from the NOx budget trading program, the NOx authorized account representative of a NOx budget opt-in unit shall submit to the director a request to withdraw effective as of a specified date prior to May first or after September thirtieth. The submission shall be made no later than ninety days prior to the requested effective date of withdrawal.

(2) Before a NOx budget opt-in unit covered by a request under paragraph (G)(1) of this rule may withdraw from the NOx budget trading program and the NOx budget opt-in permit may be terminated under paragraph (G)(5) of this rule, the following conditions shall be met:

(a) For the control period immediately before the withdrawal is to be effective, the NOx authorized account representative shall submit or shall have submitted to the director an annual compliance certification report in accordance with paragraph (A) of rule 3745-14-04 of the Administrative Code.

(b) If the NOx budget opt-in unit has excess emissions for the control period immediately before the withdrawal is to be effective, the Administrator shall deduct from the NOx budget opt-in unit's compliance account, or the overdraft account of the NOx budget source where the NOx budget opt-in unit is located, the full amount required under paragraph (E)(4) of rule 3745-14-06 of the Administrative Code for the control period.

(c) After the requirements for withdrawal under paragraphs (G)(2)(a) and (G)(2)(b) of this rule are met, the administrator shall deduct from the NOx budget opt-in unit's compliance account, or the overdraft account of the NOx budget source where the NOx budget opt-in unit is located, NOx allowances equal in number to and allocated for the same or a prior control period as any NOx allowances allocated to that source under paragraph (I) of this rule for any control period for which the withdrawal is to be effective. The administrator shall close the NOx budget opt-in units compliance account and shall establish, and transfer any remaining allowances to, a new general account for the owners and operators of the NOx budget opt-in unit. The NOx authorized account representative for the NOx budget opt-in unit shall become the NOx authorized account representative for the general account.

(3) A NOx budget opt-in unit that withdraws from the NOx budget trading program shall comply with all requirements under the NOx budget trading program concerning all years for which such NOx budget opt-in unit was a NOx budget opt-in unit, even if such requirements arise or shall be complied with after the withdrawal takes effect.

(4) Notification.

(a) After the requirements for withdrawal under paragraphs (G)(1), (G)(2) and (G)(3) of this rule are met, the director shall issue a notification to the NOx authorized account representative of the NOx budget opt-in unit of the acceptance of the withdrawal of the NOx budget opt-in unit as of a specified effective date that is after such requirements have been met and that is prior to May first or after September thirtieth.

(b) If the requirements for withdrawal under paragraphs (G)(1), (G)(2) and (G)(3) of this rule are not met, the director shall issue a notification to the NOx authorized account representative of the NOx budget opt-in unit that the NOx budget opt-in units request to withdraw is denied. If the NOx budget opt-in units request to withdraw is denied, the NOx budget opt-in unit shall remain subject to the requirements for a NOx budget opt-in unit.

(5) After the director issues a notification under paragraph (G)(4)(a) of this rule that the requirements for withdrawal have been met, the director shall revise the NOx budget permit covering the NOx budget opt-in unit to terminate the NOx budget opt-in permit as of the effective date specified under paragraph (G)(4)(a) of this rule. A NOx budget opt-in unit shall continue to be a NOx budget opt-in unit until the effective date of the termination.

(6) If the director denies the NOx budget opt-in unit's request to withdraw, the NOx authorized account representative may submit another request to withdraw in accordance with paragraphs (G)(1) and (G)(2) of this rule.

(7) Once a NOx budget opt-in unit withdraws from the NOx budget trading program and its NOx budget opt-in permit is terminated under this rule, the NOx authorized account representative may not submit another application for a NOx budget opt-in permit under paragraph (D) of this rule for the unit prior to the date that is two years after the date on which the terminated NOx budget opt-in permit became effective.

(H) Change in regulatory status of NOx budget opt-in units.

(1) When a NOx budget opt-in unit becomes a NOx budget unit under paragraph (C) of rule 3745-14-01 of the Administrative Code, the NOx authorized account representative shall notify in writing the director and the administrator of such change in the NOx budget opt-in units regulatory status, within thirty days of such change.

(2) Director's and administrator's action.

(a) When the NOx budget opt-in unit becomes a NOx budget unit, the director shall revise the NOx budget opt-in unit's NOx budget opt-in permit to meet the requirements of a NOx budget permit under paragraph (D) of rule 3745-14-03 of the Administrative Code as of an effective date that is the date on which such NOx budget opt-in unit becomes a NOx budget unit.

(b) The administrator shall deduct from the compliance account for the NOx budget unit under paragraph (H)(2)(a) of this rule, or the overdraft account of the NOx budget source where the unit is located, NOx allowances equal in number to and allocated for the same or a prior control period as:

(i) Any NOx allowances allocated to the NOx budget unit (as a NOx budget opt-in unit) under paragraph (I) of this rule for any control period after the last control period during which the unit's NOx budget opt-in permit was effective; and

(ii) If the effective date of the NOx budget permit revision under paragraph (H)(2)(a) of this rule is during a control period, the NOx allowances allocated to the NOx budget unit (as a NOx budget opt-in unit) under paragraph (I) of this rule for the control period multiplied by the ratio of the number of days, in the control period, starting with the effective date of the permit revision under paragraph (H)(2)(a) of this rule, divided by the total number of days in the control period.

(c) The NOx authorized account representative shall ensure that the compliance account of the NOx budget unit under paragraph (H)(2)(a) of this rule, or the overdraft account of the NOx budget source where the unit is located, includes the NOx allowances necessary for completion of the deduction under paragraph (H)(2)(b) of this rule. If the compliance account or overdraft account does not contain sufficient NOx allowances, the administrator shall deduct the required number of NOx allowances, regardless of the control period for which they were allocated, whenever NOx allowances are recorded in either account.

(i) For every control period during which the NOx budget permit revised under paragraph (H)(2)(a) of this rule is effective, the NOx budget unit under paragraph (H)(2)(a) of this rule shall be treated, solely for purposes of NOx allowance allocations under paragraph (C) of rule 3745-14-05 of the Administrative Code, as a unit that commenced operation on the effective date of the NOx budget permit revision under paragraph (H)(2)(a) of this rule and shall be allocated NOx allowances under paragraph (C) of rule 3745-14-05 of the Administrative Code.

(ii) Notwithstanding paragraph (H)(2)(c)(i) of this rule, if the effective date of the NOx budget permit revision under paragraph (H)(2)(a) of this rule is during a control period, the following number of NOx allowances shall be allocated, under paragraph (C) of rule 3745-14-05 of the Administrative Code, to the NOx budget unit under paragraph (H)(2)(a) of this rule for the control period: the number of NOx allowances otherwise allocated to the NOx budget unit under paragraph (C) of rule 3745-14-05 of the Administrative Code for the control period multiplied by the ratio of the number of days in the control period, starting with the effective date of the permit revision under paragraph (H)(2)(a) of this rule, divided by the total number of days in the control period.

(d) When the NOx authorized account representative of a NOx budget opt-in unit does not renew its NOx budget opt-in permit under paragraph (D)(2) of this rule, the administrator shall deduct from the NOx budget opt-in units compliance account, or the overdraft account of the NOx budget source where the NOx budget opt-in unit is located, NOx allowances equal in number to and allocated for the same or a prior control period as any NOx allowances allocated to the NOx budget opt-in unit under paragraph (I) of this rule for any control period after the last control period for which the NOx budget opt-in permit is effective. The NOx authorized account representative shall ensure that the NOx budget opt-in source's compliance account or the overdraft account of the NOx budget source where the NOx budget opt-in unit is located includes the NOx allowances necessary for completion of such deduction. If the compliance account or overdraft account does not contain sufficient NOx allowances, the administrator shall

deduct the required number of NOx allowances, regardless of the control period for which they were allocated, whenever NOx allowances are recorded in either account.

(e) After the deduction under paragraph (H)(2)(d) of this rule is completed, the administrator shall close the NOx budget opt-in units compliance account. If any NOx allowances remain in the compliance account after completion of such deduction and any deduction under paragraph (E) of rule 3745-14-06 of the Administrative Code, the administrator shall close the NOx budget opt-in unit's compliance account and shall establish, and transfer any remaining allowances to, a new general account for the owners and operators of the NOx budget opt-in unit. The NOx authorized account representative for the NOx budget opt-in unit shall become the NOx authorized account representative for the general account.

(I) NOx allowance allocations to opt-in units.

(1) NOx allowance allocation.

(a) By April first immediately before the first control period for which the NOx budget opt-in permit is effective, the director shall allocate NOx allowances to the NOx budget opt-in unit and submit to the administrator the allocation for the control period in accordance with paragraph (I)(2) of this rule.

(b) By no later than April first, after the first control period for which the NOx budget opt-in permit is in effect, and April first of each year thereafter, the director shall allocate NOx allowances to the NOx budget opt-in unit, and submit to the administrator allocations for the next control period, in accordance with paragraph (I)(2) of this rule.

(2) For each control period for which the NOx budget opt-in unit has an approved NOx budget opt-in permit, the NOx budget opt-in unit shall be allocated NOx allowances in accordance with the following procedures:

(a) The heat input (in mmBtu) used for calculating NOx allowance allocations shall be the lesser of:

(i) The NOx budget opt-in unit's baseline heat input determined pursuant to paragraph (E)(3) of this rule; or

(ii) The NOx budget opt-in unit's heat input, as determined in accordance with rule 3745-14-08 of the Administrative Code, for the control period in the year prior to the year of the control period for which the NOx allocations are being calculated.

(b) The director shall allocate NOx allowances to the NOx budget opt-in unit in an amount equaling the heat input (in mmBtu) determined under paragraph (I)(2)(a) of this rule multiplied by the lesser of:

(i) The NOx budget opt-in units baseline NOx emissions rate (in lb/mmBtu) determined pursuant to paragraph (E)(3) of this rule; or

(ii) The most stringent state or federal NOx emissions limitation applicable to the NOx budget opt-in unit during the control period.

Effective: 07/18/2002

R.C. 119.032 review dates: 04/10/2008 and 04/10/2013

CERTIFIED ELECTRONICALLY
Certification

04/10/2008
Date

Promulgated Under: 119.03
Statutory Authority: 3704.03(E)
Rule Amplifies: 3704.03(A), 3704.03(D), 3704.03(E)
Prior Effective Dates: 6/21/94

3745-14-10 **Alternative compliance plans.**

Nothing in this chapter shall prohibit the owner or operator of a NOx budget unit from participating in future programs under federal rules that allow for multi-pollutant reductions in place of the requirements of the rules of this chapter.

Effective: July 18, 2002

R.C. 119.032 review dates: 04/10/2008 and 04/10/2013

CERTIFIED ELECTRONICALLY
Certification

04/10/2008
Date

Promulgated Under: 119.03
Statutory Authority: 3704.03(E)
Rule Amplifies: 3704.03(A), 3704.03(D), 3704.03(E)
Prior Effective Dates: 6/21/94

3745-14-11 **Portland cement kilns.**

[For dates of non-regulatory government publications, publications of recognized organizations and associations, federal rules, and federal statutory provisions referenced in this rule, see the "Incorporation by Reference" section at the end of rule 3745-14-01 of the Administrative Code.]

(A) The requirements of this rule shall apply only to following types of portland cement kilns with process rates of at least that indicated below:

(1) For long dry kilns, twelve tons per hour;

(2) For long wet kilns, ten tons per hour;

(3) For preheater kilns, sixteen tons per hour; and

(4) For precalciner and preheater/precalciner kilns, twenty-two tons per hour.

(B) After April 30, 2004, an owner or operator of any portland cement kiln subject to this rule shall not operate the kiln during May first through September thirtieth unless the kiln has installed and operates during May first through September thirtieth with low-NOx burners, mid-kiln system firing, or alternative control techniques, subject to approval by the administrator, that achieve at least the same emissions decreases as low-NOx burners or mid-kiln system firing.

(C) Reporting, monitoring and record keeping requirements.

(1) Any owner or operator subject to the requirements of paragraph (B) of this rule shall comply with the following requirements:

(a) By May 1, 2004, submit to the director and administrator the identification number and type of each unit subject to the rule, the name and address of the plant where the unit is located, and the name and telephone number of the person responsible for demonstrating the compliance of the unit with this rule; and

(b) Submit a report documenting for each unit the total NOx emissions from May first through September thirtieth of each year to the director and administrator by October thirty-first of each year, beginning in 2004.

(2) Any owner or operator of a unit subject to paragraph (B) of this rule shall complete an initial performance test and subsequent annual testing consistent with the requirements of Methods 1, 2, 3 and 4 of 40 CFR Part 60, Appendix A and Method 7, 7A, 7C, 7D, or 7E of 40 CFR Part 60.

(3) Any owner or operator of a unit subject to paragraph (B) of this rule shall produce and maintain records which shall include, but are not limited to:

(a) The emissions, in pounds of NOx per ton of clinker produced from each affected cement kiln;

(b) The date, time and duration of any startup, shutdown or malfunction in the operation of any of the cement kilns or the emissions monitoring equipment;

(c) The results of any performance testing; and

(d) Daily cement kiln production records.

(4) All records required to be produced or maintained shall be retained on site for a minimum of two years and be made available to the director or administrator upon request.

(D) The requirements of this rule shall not apply to the following periods of operation:

(1) Start-up and shutdown periods and periods of malfunction, not to exceed thirty-six consecutive hours; and

(2) Regularly scheduled maintenance activities.

Effective: 07/19/2008

R.C. 119.032 review dates: 04/10/2008 and 07/19/2013

CERTIFIED ELECTRONICALLY
Certification

07/09/2008
Date

Promulgated Under: 119.03
Statutory Authority: 3704.03(E)
Rule Amplifies: 3704.03(A), 3704.03(D), 3704.03(E)
Prior Effective Dates: 6/21/94, 3/31/05

3745-14-12 **Stationary internal combustion engines.**

[Comment: For dates of non-regulatory government publications, publications of recognized organizations and associations, federal rules, and federal statutory provisions referenced in this rule, see the "Incorporation by Reference" section at the end of rule 3745-14-01 of the Administrative Code.]

(A) The requirements of this rule apply to the owner or operator of any large NOx SIP call engine.

(B) Compliance plan.

(1) After May 1, 2007, an owner or operator of a large NOx SIP call engine shall not operate the engine in the 2007 control period or any subsequent year's control period unless the owner or operator complies with the requirements of a compliance plan which meets the provisions listed below.

(a) The compliance plan shall be approved by the director.

(b) The compliance plan shall demonstrate enforceable emission reductions from one or more stationary internal combustion engines equal to or greater than the facility seasonal NOx 2007 tonnage reduction.

(c) The compliance plan may cover some or all engines at an individual facility or at several facilities or at all facilities in the state of Ohio that are in control of the same owner/operator.

(d) The compliance plan shall be submitted to the director by May 1, 2006.

(e) The compliance plan may include credit for decreases in NOx emissions from large NOx SIP call engines in the state of Ohio due to NOx control equipment. Credit may also be included for decreases in NOx emissions from other engines in the state of Ohio due to NOx control equipment not reflected in the 2007 base NOx emissions in the NOx SIP call engine inventory.

(f) The compliance plan shall include the following items:

(i) List of engines subject to the plan, including the engine's manufacturer, model, facility location address, and facility identification number;

(ii) The projected control period hours of operation for each engine and supporting documentation;

(iii) A description of the NOx emissions control installed, or to be installed, on each engine and documentation to support the projected NOx emission rates;

(iv) The past and projected NOx emission rates for each affected engine in grams per brake horsepower-hour;

(v) A numerical demonstration that the emission reductions obtained from all engines included under the plan will be equivalent to or greater than the owner/operator's facility seasonal NOx 2007 tonnage reduction, based on the difference between the past NOx emission rate and the projected NOx emission rate multiplied by the projected operating hours for each affected engine, and taking into account any credit under paragraph (B)(1)(e) of this rule; and

(vi) Provisions for monitoring, reporting and recordkeeping for each affected engine.

(2) The projected NOx emission rate in grams per brake horsepower-hour for each affected engine shall be included in a federally enforceable permit.

(C) Any owner or operator subject to the requirements of paragraph (B) of this rule shall comply with the following requirements:

(1) Monitoring requirements:

(a) Complete an initial performance test consistent with the requirements of 40 CFR Part 60, Appendix A, following installation of emission controls required to achieve the emission rate limit specified in paragraph (B)(2) of this rule.

(b) Perform periodic monitoring sufficient to yield reliable data from the relevant time period that is representative of a source's compliance with the emission rate limit specified in paragraph (B)(2) of this rule. Such periodic monitoring may include either:

(i) Performance tests consistent with the requirements of 40 CFR Part 60, Appendix A, or portable monitors using ASTM D6522-00(2005);

(ii) A parametric monitoring program that specifies operating parameters, and their ranges, that will provide reasonable assurance that each engine's emissions are consistent with the requirements of paragraph (B)(2) of this rule;

(iii) A predictive emissions measurement system that relies on automated data collection from instruments; or

(iv) A continuous emission monitoring system that complies with 40 CFR Part 60 or 40 CFR Part 75.

(2) Record keeping requirements:

(a) Maintain all records necessary to demonstrate compliance with the requirements of this rule for a period of two calendar years at the plant at which the subject engine is located. The records shall be made available to the director and administrator upon request.

(b) For each engine subject to the requirements of this rule, the owner or operator shall maintain records of:

(i) Identification and location of each engine subject to the requirements of this rule:

(ii) Calendar date of record:

(iii) The number of hours the unit is operated during each control period compared to the projected operating hours:

(iv) Type and quantity of fuel used: and

(v) The results of all compliance tests.

(3) Reporting requirements.

Any owner or operator subject to the requirements of this rule shall submit results of all compliance tests to the director.

Effective: 07/19/2008

R.C. 119.032 review dates: 04/10/2008 and 07/19/2013

CERTIFIED ELECTRONICALLY
Certification

07/09/2008
Date

Promulgated Under: 119.03
Statutory Authority: 3704.03(E)
Rule Amplifies: 3704.03(A), 3704.03(D), 3704.03(E)
Prior Effective Dates: 5/7/05

Chapter 3745-15: General Provisions on Air Pollution Control

Contact: Mike Ahern 614-644-3631
Mike.Ahern@epa.ohio.gov

3745-15-01 **Definitions.**

[Comment: For dates and availability of non-regulatory government publications, publications of recognized organizations and associations, federal rules, and federal statutory provisions referenced in this rule, see paragraph (BB) of this rule titled "referenced materials."]

As used in all air pollution rules, except as may be otherwise specifically provided.

(A) "Act" means Chapters 3704. and 3745. of the Revised Code.

(B) "Air pollutant" or "air contaminant" means particulate matter, dust, fumes, gas, mist, smoke, vapor or odorous substances, or any combination thereof.

(C) "Air pollution" means the presence in the ambient air of one or more air pollutants or any combination thereof in sufficient quantity and of such characteristics and duration as is or threatens to be injurious to human health or welfare, plant or animal life, or property, or which interferes with the comfortable enjoyment of life or property.

(D) "Ambient air" means that portion of the atmosphere outside of buildings and other enclosures, stacks, or ducts which surrounds human, plant, or animal life, or property.

(E) "Ambient air quality standards" means ambient air quality goals expressed numerically and intended to be attained and maintained in a stated time through the application of appropriate preventive or control measures.

(F) "ASME" means the "American Society of Mechanical Engineers."

(G) "ASTM" means the "American Society for Testing and Materials."

(H) "Area" means the state of Ohio.

(I) "Clean Air Act" or "CAA" means the federal Clean Air Act.

(J) "Control equipment" means any device or contrivance which prevents or reduces emissions.

(K) "Commenced" means that an owner or operator has undertaken a continuous program of construction or modification or has entered into a binding contractual obligation to undertake and complete, within a reasonable time, a continuous program of construction or modification.

(L) "Director" means the director of the Ohio environmental protection agency.

(M) "Emission" means the act of releasing or discharging an air pollutant into the ambient air from any source.

(N) "Existing source" means any source the construction of which was commenced prior to February 15, 1972.

(O) "Facility" means any building, structure, installation, operation, or combination thereof which contains one or more stationary source of air contaminants.

(P) "Modification" means any physical change in, or change in the method of operation of, an existing source or a new source that increases the amount of any air pollutant emitted by such source or which results in the emission of any air pollutant not previously emitted from the same location.

(Q) "New source" means any source the construction or modification of which is commenced on or after February 15, 1972.

(R) "Non-methane hydrocarbon" means any chemical compound containing carbon but excluding: carbon monoxide, carbon dioxide, carbides, metallic carbonates, ammonium carbonate, and methane.

(S) "Ohio EPA" or "OEPA," means the Ohio environmental protection agency or the director as the context or other law or rules may require.

(T) "Owner or operator" means any person who owns, leases, controls, operates or supervises a facility, an emission source, or air pollution control equipment.

(U) "Person" means the state or any agency thereof, any political subdivision, or any agency thereof, public or private corporation, individual, partnership, or other entity.

(V) "Region" means an air quality control region as designated by the secretary of health, education and welfare, or by the administrator, United States environmental protection agency, or by the director.

(W) "Source" means any building, structure, facility, operation, installation, other physical facility, or real or personal property that emits or may emit any air pollutant.

(X) "Source operation" means the last operation preceding emission which operation:

(1) Results in the separation of the air contaminant from the process materials or in the conversion of the process materials into air contaminants, as in the case of combustion fuel; and

(2) Is not an air pollution abatement operation.

(Y) "Stack" means any chimney, flue, conduit, or duct arranged to conduct emissions to the ambient air.

(Z) "Standard conditions" means a dry gas temperature of seventy degrees Fahrenheit (21.1 degrees centigrade) and a gas pressure of 14.7 pounds per square inch absolute (seven hundred sixty millimeters mercury).

(AA) Referenced materials. This chapter includes references to certain subject matter or materials. The text of the referenced materials is not included in the rules contained in this chapter. Information on the availability of the referenced materials, as well as the date of and/or the particular edition or version of the

material is included in this rule. For materials subject to change, only the specific version specified in this rule are incorporated. Material is referenced as it exists on the effective date of this rule. Except for subsequent annual publication of existing (unmodified) Code of Federal Regulation compilations, any amendment or revision to a referenced document is not included unless and until this rule as been amended to specify the new dates.

(1) Availability. The referenced materials are available as follows:

(a) American society of mechanical engineers (ASME). Information and copies of ASTM documents may be obtained by writing to: "ASME International, P.O. Box 2300, Fairfield, NJ 07007-2300." ASME documents are also available for purchase at www.asme.org. ASME documents are also available for inspection and use at most public libraries and "The State Library of Ohio."

(b) American society for testing materials (ASTM). Information and copies of ASTM documents may be obtained by writing to: "ASTM International, 100 Bar Harbor Drive, P.O. Box C700, West Conshohocken, Pennsylvania 19426- 2959." ASTM documents are also available for purchase at www.astm.org. ASTM documents are also available for inspection and use at most public libraries and "The State Library of Ohio."

(c) Code of Federal Regulations (CFR). Information and copies may be obtained by writing to: "Superintendent of Documents, Attn: New Orders, PO Box 371954, Pittsburgh, PA 15250-7954." The full text of the CFR is also available in electronic format at http://www.gpoaccess.gov/cfr/index.html. The CFR compilations are also available for inspection and use at most public libraries and "The State Library of Ohio."

(d) United States Code (USC). Information and copies may be obtained by writing to: "Superintendent of Documents, Attn: New Orders, PO Box 371954, Pittsburgh, PA 15250-7954." The full text of the United States Code is also available in electronic format at http://www.gpo.gov/fdsys/. The U.S.C compilations are also available for inspection and use at most public libraries and "The State Library of Ohio."

(2) Incorporated materials.

(a) 40 CFR Part 302; "Designation, reportable quantities, and notification;" as published in the July 1, 2014 Code of Federal Regulations.

(b) 40 CFR Part 355; "Emergency Planning and Notification;" as published in the July 1, 2014 Code of Federal Regulations.

(c) 42 USC 7401 to 7671q; "The Public Health and Welfare-Air Pollution Prevention and Control;" published January 19, 2004 in Supplement III

of the 2000 Edition of the United States Code; as amended January 23, 2004, Pub. L. 108-199, sec, 425(a) and sec. 428(b), 118 Stat. 417-418.

(d) Section 112(b) of the Clean Air Act; contained in 42 USC 7412; "Hazardous air pollutants- List of pollutants;" published April 3, 2014 in Volume 27 of the 2012 Edition of the United States Code.

Effective: 07/20/2015

Five Year Review (FYR) Dates: 05/04/2015 and 07/20/2020

CERTIFIED ELECTRONICALLY
Certification

07/10/2015
Date

Promulgated Under: 119.03
Statutory Authority: 3704.03(E)
Rule Amplifies: 3704.03(F)
Prior Effective Dates: 7/5/73, 1/25/80, 1/22/09

3745-15-02 **Purpose.**

It is the purpose of all air pollution rules adopted under Chapter 3704. or Chapter 3745. of the Revised Code or any rule adopted thereunder to set forth such requirements as shall be necessary to secure and maintain those levels of air quality which are consistent with the protection of health and the prevention of injury to plant, animal life, and property in the state of Ohio, and to provide for the comfortable enjoyment of the natural attractions of the state to the greatest extent practical. All regulations of the director shall be construed in such manner as to effectuate this purpose.

Effective: 07/20/2015

Five Year Review (FYR) Dates: 05/04/2015 and 07/20/2020

CERTIFIED ELECTRONICALLY
Certification

07/10/2015
Date

Promulgated Under: 119.03
Statutory Authority: 3704.03(E)
Rule Amplifies: 3704.03(F)
Prior Effective Dates: 8/7/72, 1/25/80, 1/22/09

3745-15-03 **Submission of emission information.**

(A) The director may require the keeping and periodic submission of records and reports, including but not limited to, information on air contaminants, emissions or fuel from any or all potential sources for purposes of maintaining an air pollution emission inventory or any other reasonable purpose as determined by the director. Such information shall be recorded, compiled, and submitted in a manner and form prescribed by the director.

(B) Periodic reporting.

(1) Requirements under paragraph (C) of this rule shall be applicable to an owner or operator of a facility, issued one of the following:

(a) A permit-to-install pursuant to Chapter 3745-31 of the Administrative Code.

(b) A federally enforceable permit-to-install and operate (FEPTIO) pursuant to Chapter 3745-31 of the Administrative Code; however, this requirement shall only be applicable to the terms and conditions specifically identified in the FEPTIO as subject to reporting under paragraph (C) of this rule.

(c) A permit-to-install and operate (PTIO) pursuant to Chapter 3745-31 of the Administrative Code for a source for which a Title V permit is subsequently issued pursuant to Chapter 3745-77 of the Administrative Code.

(2) Requirements under paragraph (D) of this rule shall be applicable to an owner or operator of a facility issued a permit-to-install and operate (PTIO) or a federally enforceable permit-to-install and operate (FEPTIO), pursuant to Chapter 3745-31 of the Administrative Code for a source not subject to Chapter 3745-77 of the Administrative Code.

(C) Quarterly report.

(1) Pursuant to paragraph (A) of this rule, each permit described under paragraph (B)(1) of this rule shall require the owner or operator submit a quarterly report of the following:

(a) Any deviations from emission limitations, operational restrictions, and control device operating parameter limitations that have been detected by the testing, monitoring, and recordkeeping requirements specified in such permit including the following:

(i) The probable cause of such deviations.

(ii) Any corrective actions or preventive measures which have been or will be taken to remedy the deviations.

(b) If no deviations occurred during a calendar quarter, the owner or operator shall submit a quarterly report, which states that no deviations occurred during that quarter.

(2) For the purposes of this rule, quarterly shall mean January to March, April to June, July to September, and October to December. Each report shall be submitted by the thirty-first of January, thirtieth of April, thirty-first of July, and thirty-first of October of each year, or any other variation of a continuous quarterly period the director approves, and shall cover the previous calendar quarter.

[Comment: "Submitted" as used above will be considered the postmark date, if sent by United States postal service; the electronic signature date, if submitted through the Ohio environmental protection agency's electronic reporting system; or the signature date of the receipt, if hand delivered in person or by third-party commercial carrier to the appropriate Ohio environmental protection agency district office or local air agency.]

(3) Unless required by Chapter 3745-77 of the Administrative Code, quarterly reports may exclude the requirements of paragraphs (C)(1)(a) to (C)(1)(c) of this rule for reported deviations resulting from malfunctions reported in accordance with rule 3745-15-06 of the Administrative Code. In lieu of the requirements of paragraphs (C)(1)(a) to (C)(1)(c) of this rule, the owner or operator shall identify in the quarterly report the date the malfunction occurred and the form in which it was reported (e.g., telephone, e-mail, written).

(4) Reports submitted in accordance with Chapter 3745-77 of the Administrative Code for sources subject to Chapter 3745-77 of the Administrative Code, shall be deemed to meet the requirements for quarterly reporting under this rule if the requirements contained in paragraph (C) of this rule are satisfied in the reporting required under Chapter 3745-77 of the Administrative Code. The owner or operator shall identify in any report submitted under Chapter 3745-77 of the Administrative Code when such report is being submitted in accordance with this paragraph.

(D) Permit evaluation report.

(1) Pursuant to paragraph (A) of this rule, each permit described under paragraph (B)(2) of this rule shall require the owner or operator to submit a permit evaluation report, in a form and manner prescribed by the director, which identifies, at a minimum, the following:

(a) A list of all air contaminant sources that have been issued a permit described under paragraph (B)(2) of this rule.

(b) Additional information or corrections to air contaminant sources identified in the permit evaluation permit.

(c) Any deviations from emission limitations, operational restrictions, and control device operating parameter limitations that have been detected by the testing, monitoring, and recordkeeping requirements specified in such permit including the following:

(i) The probable cause of such deviations.

(ii) Any corrective actions or preventive measures which have been or will be taken to remedy the deviations.

(d) If no deviations occurred during the reporting period, the owner or operator shall identify in the permit evaluation report that no deviations occurred during that reporting period.

(2) Reporting period.

(a) At a minimum, the permit evaluation report shall be submitted annually and cover a reporting period of no more than twelve-months for each air contaminant source. The first permit, described under paragraph (B)(2) of this rule, issued to an owner or operator shall identify the reporting period for the covered air contaminant source. This reporting period shall be applied to all subsequent air contaminant sources issued permits described under paragraph (B)(2) of this rule. The four possible reporting periods, and subsequent permit evaluation report due dates are as follows:

(i) January first to December thirty-first, report due by February fifteenth.

(ii) April first to March thirty-first, report due by May fifteenth.

(iii) July first to June thirtieth, report due by August fifteenth.

(iv) October first to September thirtieth, report due by November fifteenth.

(b) The permit evaluation report shall be submitted to the appropriate Ohio environmental protection agency district office or local air agency by the due date specified.

[Comment: "Submitted" as used above will be considered the postmark date, if sent by United States postal service; the electronic signature date, if submitted through the Ohio environmental protection agency's electronic reporting system; or the signature date of the receipt, if hand delivered in person or by third-party commercial carrier to the appropriate Ohio environmental protection agency district office or local air agency.]

(c) The Ohio environmental protection agency shall provide opportunity for an owner or operator to request a change in the permit evaluation

reporting period and due date through procedures established by the director.

(3) Unless required by Chapter 3745-77 of the Administrative Code, permit evaluation reports may exclude the requirements of paragraphs (D)(1)(c) to (D)(1)(e) of this rule for reported deviations resulting from malfunctions reported in accordance with rule 3745-15-06 of the Administrative Code. In lieu of the requirements of paragraphs (D)(1)(c) to (D)(1)(e) of this rule, the owner or operator shall identify in the permit evaluation report the date the malfunction occurred and the form in which it was reported (e.g., telephone, e-mail, written).

Effective: 07/20/2015

Five Year Review (FYR) Dates: 05/04/2015 and 07/20/2020

CERTIFIED ELECTRONICALLY
Certification

07/10/2015
Date

Promulgated Under: 119.03
Statutory Authority: 3704.03(E)
Rule Amplifies: 3704.03(F)
Prior Effective Dates: 1/25/80, 2/3/00, 6/30/08

3745-15-04 **Measurement of emissions of air contaminants.**

(A) The director may require any persons responsible for emission of air contaminants to make or have made tests to determine the emission of air contaminants from any source whenever the director has reason to believe that an emission in excess of that allowed by these rules is occurring or has occurred from time to time. All tests shall be conducted by qualified persons and the results calculated in accordance with test procedures approved by the director. The owner or the owner's authorized agent shall notify the director in writing of the time, place, and person who will conduct the tests and the director or the director's authorized representative shall be permitted to witness the tests. The director shall be furnished with a written report of test results no later than thirty days after completion of the tests and such report shall be signed by the person or persons responsible for the tests. The director may reject the results of any compliance test which is not performed in accordance with approved test procedures or which is performed without the advance notice and information required by this paragraph.

(B) The director may conduct tests of emissions of air contaminants from any source. Upon request of the director the person responsible for the source to be tested shall provide necessary holes in stacks or ducts and such other safe and proper sampling and testing facilities exclusive of instruments and sensing devices as may be necessary for proper determination of the emission of air contaminants.

(C) The director may install, or require the owner or operator of any source of air contamination, at the owner or operator's expense, to install, use, and maintain monitoring equipment, and to sample the owner or operator's emissions in accordance with methods approved by the director.

Effective: 01/22/2009

R.C. 119.032 review dates: 11/30/2006 and 01/22/2014

CERTIFIED ELECTRONICALLY
Certification

01/12/2009
Date

Promulgated Under: 119.03
Statutory Authority: 3704.03(E)
Rule Amplifies: 3704.03(F)
Prior Effective Dates: 1/25/80, 2/3/00

3745-15-05 **"De Minimis" air contaminant source exemption.**

[Comment: For dates and availability of non-regulatory government publications, publications of recognized organizations and associations, federal rules, and federal statutory provisions referenced in this rule, see paragraph (BB) of rule 3745-15-01 of the Administrative Code titled "referenced materials."]

(A) For purposes of this rule, the following definitions apply:

(1) "Actual emissions" means the amount of emissions an air contaminant source actually emits on a calendar day or calendar year basis, whichever is applicable.

(2) "Air contaminant" means particulate matter, dust, fumes, gas, mist, radionuclides, smoke, vapor, or odorous substances, or any combination thereof, but does not include water by itself.

(3) "Air contaminant source" or "source" means each separate operation or activity that results or may result in the emission of any air contaminant.

(4) "Air pollution control equipment" shall mean control equipment which is not, aside from air pollution control requirements, vital to production of the normal product of the source or to its normal operation. Equipment is vital if the source could not produce its normal product or operate without it.

(5) "Hazardous air pollutant" means any pollutant listed pursuant to Section 112(b) of the CAA.

(6) "Potential to emit" or "potential emissions" shall mean the amount of emissions of an air contaminant which would be emitted from a source during a twenty-four hour calendar day or calendar year basis, whichever is applicable, if that source were operated without the use of air pollution control equipment unless such control equipment is, aside from air pollution control requirements, necessary for the facility to produce its normal product or is integral to the normal operation of the source. Potential emissions shall be based on maximum rated capacity.

(7) "Similar sources" are the following:

(a) Sources for which construction and operation are essentially the same, although, the capacity of each source is not necessarily the same.

(b) Sources in which the physical or chemical process occurring in each source is essentially the same.

(c) Sources from which essentially the same air pollutants are emitted.

(B) Except as provided in paragraphs (C), (D) and (H) of this rule and division (B) of section 3704.011 of the Revised Code, any air contaminant source is exempt

from Chapter 3704. of the Revised Code and rules adopted thereunder, unless the potential emissions of any one of the following exceeds ten pounds per day: particulate matter, sulfur dioxide, nitrogen oxides, organic compounds, carbon monoxide, lead or any other air contaminant.

(C) The exemption contained in paragraph (B) of this rule shall not apply to a source if any of the following applies:

(1) A requirement established under the CAA or regulations adopted under it limits the emissions of an air pollutant from the source to less than ten pounds per day or restricts the operation of the source in a manner equivalent to an emission limit of less than ten pounds per day.

(2) The source is subject to an emission limit adopted by the director to achieve and maintain the national ambient air quality standards or a rule adopted by the director to protect public health and welfare limits the emissions from the source to less than ten pounds per day of an air pollutant or restricts the operation of the source in a manner equivalent to an emission limit of less than ten pounds per day.

(3) The source emits radionuclides.

(4) The source alone or in combination with similar sources at the same facility, would result in potential emissions of any air pollutant in excess of twenty-five tons per year. In determining the total emissions from a group of similar sources, an enforceable permit emission limit shall be used in lieu of the potential to emit for such source or sources.

(5) The source emits more than one ton per year of any hazardous air pollutants or combination of hazardous air pollutants.

(D) The exemption provided in division (A) of section 3704.011 of the Revised Code does not apply to an air contaminant source having potential emissions greater than ten pounds per day (or one ton per year of one or more hazardous air pollutants) of any air contaminant unless the owner or operator of the source maintains records that are adequate to demonstrate that actual emissions from the source did not exceed ten pounds per day (or one ton per year of one or more hazardous air pollutants) and unless that source is not subject to the limitations specified in paragraph (C) of this rule.

(E) In order to verify that actual emissions from a source described in paragraph (D) of this rule complied with the requirements of divisions (A) and (C) of section 3704.011 of the Revised Code during its operations, the owner or operator of the source shall maintain records that show that emissions of any air contaminant from the source did not exceed ten pounds per day on each day the source emitted air contaminants, and that the source in any one year did not emit more than one ton of hazardous air pollutants as defined in division (1) of section 3704.03 of the Revised Code, and that the emissions from the source, in combination with similar air contaminant sources at the same facility, did not

result in potential emissions of any air contaminant from the facility in excess of twenty-five tons during the preceding calendar year. Records consisting of one or more of the following types of information, if applicable, shall be adequate to make that demonstration, so long as the information clearly demonstrates that the owner or operator is operating in accordance with this rule:

(1) A narrative description of how the emissions from the source were determined and maintained at or below the daily exemption level, and, for emissions of hazardous air pollutants, at or below the annual exemption level.

(2) A description of the air pollution control equipment used on the source and a statement that the source is not capable of operating without that pollution control equipment functioning.

(3) If air pollution control equipment is used, a copy of any report of the results of any emission test that was conducted following Ohio EPA approved methods, if applicable, or any other emission evaluation.

(4) A description of all production constraints required for the source to comply with the exemption levels.

(5) Records of actual operations that demonstrate that the daily and annual emissions from the source were maintained at or below the exemption level by the use of the necessary production constraints or pollution control equipment.

(6) A list of all similar sources at the same facility and a statement for each such source of the annual potential emissions. Compliance with paragraph (C)(4) of this rule shall be demonstrated.

(7) A summation of the total emissions from each exempt or similar source, a summation of stated potential emissions from all sources identified in paragraph (E)(6) of this rule, and a written certification by the owner or operator that the applicable exemption levels were complied with.

(F) Records developed under paragraph (E) of this rule shall be maintained by the owner of the source at a location at the facility for a period of two years following the recording of the information, and shall be provided, upon request, to the director.

(G) The owner or operator of such an exempt source not subject to paragraph (E) of this rule, upon the request of the director or his authorized representative concerning such source, shall provide information that is adequate to demonstrate that the source qualifies for the exemption.

(H) Nothing in this rule shall be construed to exempt any source from requirements of the CAA, including its being considered for purposes of determining whether a facility constitutes a major source or is otherwise regulated under Chapter 3745-77 of the Administrative Code or any requirement to identify insignificant

activities and emissions levels in a title V permit application. In addition, this rule does not exempt any source that is a part of a major new source or major modification that would be required to meet any requirements under applicable state or federal regulations.

(I) If a source exempt under this rule should at any time exceed the exempt emission levels provided in paragraphs (B) and (D) of this rule, the owner or operator of such source shall immediately submit a written report describing the nature and cause of the exceedance. Upon request by the director, the owner or operator of such source shall submit an application for a permit to install if required by Chapter 3745-31 of the Administrative Code and an application for a permit to operate pursuant to Chapter 3745-35 or Chapter 3745-77 of the Administrative Code, as applicable.

Effective: 07/20/2015

Five Year Review (FYR) Dates: 05/04/2015 and 07/20/2020

CERTIFIED ELECTRONICALLY
Certification

07/10/2015
Date

Promulgated Under: 119.03
Statutory Authority: 3704.03(E)
Rule Amplifies: 3704.03(F)
Prior Effective Dates: 4/20/94, 11/18/94, 2/3/00, 1/22/09

3745-15-06 **Malfunction of equipment; scheduled maintenance; reporting.**

(A) Scheduled maintenance of air pollution control equipment shall be conducted according to the following:

(1) For the purposes of this rule, maintenance of air pollution control equipment which is scheduled to prevent a malfunction which would occur within two weeks if the maintenance were not performed shall be considered to be a malfunction and shall be subject to the provisions of paragraph (B) of this rule.

(2) Except as otherwise indicated in paragraph (A)(3) of this rule, scheduled maintenance of air pollution control equipment, that requires the shutdown or bypassing of said equipment, must be accompanied by the shutdown of the associated air pollution sources.

(3) In cases where a complete source shutdown may result in damage to the air pollution sources or is otherwise impossible or impractical, the owner or operator may request authorization to continue operating the sources during the scheduled maintenance of air pollution control equipment. Any such request shall be made in a written report at least two weeks prior to the planned shutdown of the air pollution control equipment. The director shall authorize the shutdown of the air pollution control equipment if, in his judgment, the situation justifies continued operation of the sources. Any written report submitted pursuant to this paragraph shall contain the following:

(a) Identification and location of the specific source for which air pollution control equipment will be taken out of service. The identification shall include the Ohio environmental protection agency permit application number.

(b) The expected length of time that the air pollution control equipment will be taken out of service.

(c) The nature and estimated quantity of emissions of air contaminants which are likely to occur during the shutdown period.

(d) Measures such as the use of off-shift labor and equipment that will be taken to minimize the length of the shutdown period.

(e) The reasons that it will be impossible or impractical to shut down the source operation during the scheduled maintenance period.

(f) A demonstration that all feasible interim control measures will be taken to reduce emissions from the source during the shutdown period.

(B) Malfunctions of air pollution control equipment shall be reported as follows:

(1) In the event that any emission source, air pollution control equipment, or related facility breaks down in such a manner as to cause the emission of air contaminants in violation of any applicable law, the person responsible for such equipment shall immediately notify the Ohio environmental protection agency district office or delegate agency of such failure or breakdown. If the malfunction continues for more than seventy-two hours, the source owner or operator shall provide a written statement to the director within two weeks of the date the malfunction occurred. The immediate notification and written statement shall include the following data:

(a) Identification and location of such equipment including the Ohio environmental protection agency permit application number for each air contaminant source.

(b) The estimated or actual duration of breakdown.

(c) The nature and estimated quantity of air contaminants which have been or may be emitted into the ambient air during the breakdown period.

(d) Statements demonstrating the following:

(i) Shutdown or reduction of source operation during the breakdown period will be or would have been impossible or impractical.

(ii) The estimated breakdown period will be or was reasonable in duration based on installation or repair time, delivery dates of equipment, replacement parts, or materials, or current unavailability of essential equipment, parts, or materials.

(iii) Available alternative operating procedures and interim control measures will be or have been implemented during the breakdown period to reduce adverse effects on public health or welfare.

(iv) All actions necessary and required by any applicable preventive maintenance and malfunction abatement plan will be or have been implemented.

(2) The Ohio environmental protection agency district office or delegate agency shall be notified when the condition causing the failure or breakdown has been corrected and the equipment is again in operation. Notification of the correction of the condition causing the failure or breakdown may be given verbally if the duration of the malfunction is seventy-two hours or less. Otherwise, such notification shall be in writing.

(3) Within two months following a failure or breakdown which exceeded seventy-two hours in duration, the owner or operator of such equipment shall prepare and submit a detailed report which identifies a program to prevent, detect and correct, as expeditiously as practicable, similar future failures or breakdowns of such equipment.

(C) The director retains the responsibility to evaluate any report submitted pursuant to this rule. The director shall take appropriate action upon a determination that the reporting requirements of this rule have not been satisfied, that the equipment was not properly operated and maintained prior to breakdown, that shutdown of the source or operation during the period of maintenance or breakdown was or has become practicable, that the shutdown or breakdown was or has become avoidable, or was induced or prolonged in bad faith, or that the emissions endanger or tend to endanger the health or safety of the public.

(D) If, in the judgment of the director, excessive or unduly prolonged malfunctions of any emission source, air pollution control equipment or related facility have occurred, the director may require the owner or operator of said source, equipment or related facility to prepare, submit and implement a preventive maintenance and malfunction abatement plan which is acceptable to the director. Such plan shall be designed to prevent, detect and correct malfunctions or equipment failures which could result in emissions exceeding any applicable law.

(1) Each preventive maintenance and malfunction abatement plan shall be in writing and specify the following:

(a) A comprehensive preventive maintenance program, including a description of the items or conditions that will be inspected, the frequency of these inspections or repairs, and an identification of the types and quantities of the replacement parts which will be maintained in inventory for quick replacement.

(b) An identification of the source and the operating outlet variables of the air pollution control equipment that will be monitored in order to detect a malfunction or failure, the normal operating range of these variables, and a description of the monitoring or surveillance procedures and of the method of informing operating personnel of any malfunction, including alarm systems, lights or other indicators.

(c) A description of the corrective procedures that will be taken in the event of a malfunction or failure in order to achieve compliance with any applicable law as expeditiously as practicable.

(2) Any acceptable preventive maintenance and malfunction abatement plan shall be specified in the terms and conditions of any permit or variance issued for a source covered by such plan.

(3) Operation and maintenance records shall be maintained by the owner or operator of the source to demonstrate that any preventive maintenance and malfunction abatement plan is fully implemented. All such records shall be maintained for a minimum of two years and shall be subject to inspection by the director or his representative upon request.

Effective: 07/20/2015

Five Year Review (FYR) Dates: 05/04/2015 and 07/20/2020

CERTIFIED ELECTRONICALLY
Certification

07/10/2015
Date

Promulgated Under: 119.03
Statutory Authority: 3704.03(E)
Rule Amplifies: 3704.03(F)
Prior Effective Dates: 2/15/72, 1/25/80

3745-15-07 **Air pollution nuisances prohibited.**

(A) The emission or escape into the open air from any source or sources whatsoever, of smoke, ashes, dust, dirt, grime, acids, fumes, gases, vapors, or any other substances or combinations of substances, in such manner or in such amounts as to endanger the health, safety or welfare of the public, or cause unreasonable injury or damage to property, is hereby found and declared to be a public nuisance. It shall be unlawful for any person to cause, permit or maintain any such public nuisance.

(B) The emission or escape into the open air from any source or sources of odors whatsoever that is subject to regulation under Chapter 3745-17, 3745-18, 3745-21, or 3745-31 of the Administrative Code and is operated in such a manner to emit such amounts of odor as to endanger the health, safety, or welfare of the public, or cause unreasonable injury or damage to property, is hereby found and declared to be a public nuisance. It shall be unlawful for any person to cause, permit or maintain any such public nuisance.

Effective: 07/20/2015

Five Year Review (FYR) Dates: 05/04/2015 and 07/20/2020

CERTIFIED ELECTRONICALLY
Certification

07/10/2015
Date

Promulgated Under: 119.03
Statutory Authority: 3704.03(E)
Rule Amplifies: 3704.03(F)
Prior Effective Dates: 2/15/72, 5/17/82

3745-15-08 **Circumvention.**

No person shall cause or permit the installation or use of any device or any means which, without resulting in reduction in the total amount of air contaminant emitted, conceals or dilutes an emission of air contaminant which would otherwise violate Chapter 3704., 3714., 3734., 3745., 6109., or 6111. of the Revised Code or any rule adopted thereunder.

Effective: 07/20/2015

Five Year Review (FYR) Dates: 05/04/2015 and 07/20/2020

CERTIFIED ELECTRONICALLY
Certification

07/10/2015
Date

Promulgated Under: 119.03
Statutory Authority: 3704.03(E)
Rule Amplifies: 3704.03(F)
Prior Effective Dates: 2/15/72, 1/25/80, 1/22/09

3745-15-09 **Severability.**

If any provision of Chapter 3704. or Chapter 3745. of the Revised Code or any rule adopted thereunder or the application thereof to any person or circumstances is held to be invalid, such invalidity shall not affect other provisions or application of any other part of such rules which can be given without the invalid provisions or application, and to this end the provisions of any rule adopted under Chapter 3704. or Chapter 3745. of the Revised Code and the various applications thereof are declared to be severable.

Effective: 07/20/2015

Five Year Review (FYR) Dates: 05/04/2015 and 07/20/2020

CERTIFIED ELECTRONICALLY
Certification

07/10/2015
Date

Promulgated Under: 119.03
Statutory Authority: 3704.03(E)
Rule Amplifies: 3704.03(F)
Prior Effective Dates: 2/15/72, 1/25/80, 1/22/09

Chapter 3745-16: Stack Height Requirements

Contact: Jennifer Van Vlerah 614-644-3696
jennifer.vanvlerah@epa.ohio.gov

3745-16-01 **Definitions.**

[Comment: For dates of non-regulatory government publications, publications of recognized organizations and associations, federal rules, and federal statutory provisions referenced in this rule, see the "Incorporation by Reference" section at the end of this rule.]

(A) Except as otherwise provided in this rule, the definitions in rule 3745-15-01 of the Administrative Code shall apply to this chapter.

(B) A "stack in existence" means that the owner or operator had:

(1) Begun, or caused to begin, a continuous program of physical on-site construction of the stack; or

(2) Entered into binding agreements or contractual obligations which could not be cancelled or modified without substantial loss to the owner or operator, to undertake a program of construction of the stack within a reasonable time.

(C)

(1) "Dispersion technique" means any technique which attempts to affect the concentration of a pollutant in the ambient air by:

(a) Using that portion of a stack which exceeds good engineering practice stack height;

(b) Varying the rate of emission of a pollutant according to atmospheric conditions or ambient concentrations of that pollutant; or

(c) Increasing final exhaust gas plume rise by manipulating source process parameters, exhaust gas parameters, stack parameters, or combining exhaust gases from several existing stacks into one stack, or other selective handling of exhaust gas streams so as to increase the exhaust gas plume rise.

(2) The following are excluded from the term "dispersion technique":

(a) The reheating of a gas stream, following use of a pollution control system, for the purpose of returning the gas to the temperature at which it was originally discharged from the source or sources generating the gas stream;

(b) The merging of exhaust gas streams where:

(i) The owner or operator demonstrates that the sources were originally designed and constructed with such merged gas streams;

(ii) After July 8, 1985, such merging is part of a change in operation of the sources that includes the installation of pollution controls and is accompanied by a net reduction in the allowable emissions of a pollutant. This exclusion from the definition of "dispersion techniques" shall apply only to the emission limitation for the pollutant affected by such change in operation; or

(iii) Before July 8, 1985, such merging was part of a change in operation of the sources that included the installation of emissions control equipment or was carried out for sound economic or engineering reasons. Where there was an increase in the emission limitation or, in the event that no emission limitation was in existence prior to the merging, an increase in the quantity of pollutants actually emitted prior to the merging, the director shall presume that merging was significantly motivated by an intent to gain emissions credit for greater dispersion. Absent a demonstration by the owner or operator that merging was not significantly motivated by such intent, the director shall deny credit for the effects of such merging in calculating the allowable emissions for the source;

(c) Smoke management in agricultural or silvicultural prescribed burning programs;

(d) Episodic restrictions on residential woodburning and open burning; or

(e) Techniques under paragraph (C)(1)(c) of this rule which increase final exhaust gas plume rise where the resulting allowable emissions of sulfur dioxide from the facility do not exceed five thousand tons per year.

(D) "Emission limitation" and "emission standard" mean a requirement that limits the quantity, rate or concentration of emissions of air contaminants, including any requirement relating to the operation or maintenance of a source.

(E) "Excessive concentration" for purposes of paragraph (F)(3) of this rule means:

(1) For sources seeking credit for stack height exceeding that established under paragraph (F)(2) of this rule, a maximum ground-level concentration due to emissions from a stack due in whole or part to downwash, wakes or eddy effects produced by nearby structures or nearby terrain features which individually is at least forty per cent in excess of the maximum concentration experienced in the absence of such downwash, wakes or eddy effects and which contributes to a total concentration due to emissions from all sources that is greater than an ambient air quality standard. For sources subject to the United States environmental protection agency prevention of significant deterioration program (40 CFR 51.166 and 40 CFR 52.21), an "excessive concentration" alternatively

means a maximum ground-level concentration due to emissions from a stack due in whole or part to downwash, wakes or eddy effects produced by nearby structures or nearby terrain features which individually is at least forty per cent in excess of the maximum concentration experienced in the absence of such downwash, wakes or eddy effects and greater than a prevention of significant deterioration increment. The allowable emission rate to be used in making such demonstrations shall be prescribed by the United States environmental protection agency new source performance standard that is applicable to the source category unless the owner or operator demonstrates that this emission rate is infeasible. Where such demonstrations have been approved by the director, he may establish an alternative emission limitation;

(2) For sources seeking credit after October 1, 1983, for increases in existing stack heights up to the heights established under paragraph (F)(2) of this rule, either:

(a) A maximum ground-level concentration due in whole or part to downwash, wakes or eddy effects as provided in paragraph (E)(1) of this rule, except that the emission rate approved by the administrator of the United States environmental protection agency as part of the state implementation plan (or, in the absence of such a limit, the actual emission rate) shall be used; or

(b) The presence of a nuisance in violation of rule 3745-15-07 of the Administrative Code caused by the existing stack, as determined by the director; and

(3) For sources seeking credit after January 12, 1979 for a stack height determined under paragraph (F)(2) of this rule where the director requires the use of a field study or fluid model to verify GEP stack height, for sources seeking stack height credit after November 9, 1984 based on the aerodynamic influence of cooling 1984 based on the aerodynamic influence of cooling towers, and for sources seeking stack height credit after December 31, 1970 based on the aerodynamic influence of structures not adequately represented by the equations in paragraph (F)(2) of this rule, a maximum ground-level concentration due in whole or part to downwash, wakes or eddy effects that is at least forty per cent in excess of the maximum concentration experienced in the absence of such downwash, wakes or eddy effects.

(F) "Good engineering practice" (GEP) stack height means the greater of:

(1) Sixty-five meters, measured from the ground-level elevation at the base of the stack;

(2)

(a) For stacks in existence on January 12, 1979, and for which the owner or operator had obtained all applicable pre-construction permits or approvals

required by Chapters 3745-31 and 3745-35 of the Administrative Code, the stack height calculated by the following formula:

$H_g = 2.5\ H$

Where: H_g = good engineering practice stack height, measured from the ground-level elevation at the base of the stack; and

H = height of nearby structure(s) measured from the ground-level elevation at the base of the stack;

Provided the owner or operator produces evidence that this equation was actually relied on in establishing an emission limitation; or

(b) For all other stacks, the stack height calculated by the following formula:

$H_g = H + 1.5\ L$

Where: H_g = good engineering practice stack height, measured from the ground-level elevation at the base of the stack;

H = height of nearby structure(s) measured from the ground-level elevation at the base of the stack; and

L = height or projected width, whichever is less, of nearby structure(s);

Provided that the director may require the use of a field study or fluid model to verify GEP stack height for the source; or

(3) The height demonstrated by a fluid model or a field study approved by the director, which ensures that the emissions from the stack do not result in excessive concentrations of any air contaminants as a result of atmospheric downwash, wakes or eddy effects created by the source itself, nearby structures or nearby terrain features.

(G) "Nearby," as used in paragraph (F) of this rule, is defined for a specific structure or terrain feature and

(1) For purposes of applying the formulae provided in paragraph (F)(2) of this rule, means that distance up to five times the lesser of the height or the width dimension of a structure, but not greater than 0.8 kilometers, and

(2) For conducting demonstrations under paragraph (F)(3) of this rule, means not greater than 0.8 kilometers, except that the portion of a terrain feature may be considered to be nearby which falls within a distance of up to ten times the maximum height of the feature, not to exceed 3.2 kilometers if such feature

achieves, within a distance of 0.8 kilometers from the stack, a height which is at least forty per cent of the GEP stack height determined by the formulae provided in paragraph (F)(2) of this rule or twenty-six meters, whichever is greater, as measured from the ground-level elevation at the base of the stack. The height of the structure or terrain feature is measured from the ground-level elevation at the base of the stack.

(H) "Stack" means any chimney, flue, conduit or duct arranged to conduct any emissions to the ambient air, excluding flares.

(I) "Stack height" means the distance from the ground-level elevation at the base of the stack to the crown of the stack. If a stack arises from a building or other structure, the ground-level elevation of that building or structure will be used as the base elevation of the stack.

(J) Incorporation by reference. This chapter contains certain matter or materials. The text of the incorporated materials is not included in the regulations contained in this chapter. The materials are hereby made a part of the regulations in this chapter. For materials subject to change, only the specific version specified in the regulation are incorporated. Material is incorporated as it exists on the effective date of this rule. Except for subsequent annual publication of existing (unmodified) Code of Federal Regulation compilations, any amendment or revision to a referenced document is not incorporated unless and until this rule has been amended to specify the new dates.

(1) Availability.

(a) Clean Air Act. Information and copies may be obtained by writing to: "Superintendent of Documents, Attn: New Orders, PO Box 371954, Pittsburgh, PA 15250-7954." The full text of the Act as amended in 1990 is also available in electronic format at www.epa.gov/oar/caa/. A copy of the Act is also available for inspection and copying at most public libraries and "The State Library of Ohio."

(b) Code of Federal Regulations (CFR). Information and copies may be obtained by writing to: "Superintendent of Documents, Attn: New Orders, PO Box 371954, Pittsburgh, PA 15250-7954." The full text of the CFR is also available in electronic format at http://www.gpoaccess.gov/cfr/index.html . The CFR compilations are also available for inspection and copying at most public libraries and "The State Library of Ohio."

(2) Incorporated materials.

(a) 40 CFR 165(a)(1)(v)(A); "Permit requirements;" 51 FR 40669, Nov. 7, 1986, as amended at 52 FR 24713, July 1, 1987; 52 FR 29386, Aug 7, 1987; 54 FR 27285, 27299 June 28, 1989; 57 FR 3946, Feb. 3, 1992; 57 FR 32334, July 21, 1992; 67 FR 80244, Dec. 31, 2002; 68 FR 61276, Oct. 27, 2003; 68

FR 63027, Nov. 7, 2003; 69 FR 40275, July 1, 2004; 70 FR 71698, Nov. 29, 2005.

(b) 40 CFR 51.166; "Prevention of significant deterioration of air quality;" as published in the July 1, 2006 Code of Federal Regulations.

(c) 40 CFR 51.166(b)(2)(i); "Prevention of significant deterioration of air quality;" as published in the July 1, 2006 Code of Federal Regulations.

(d) 40 CFR 52.21; "Approval and Promulgation of Implementation Plans, Prevention of significant deterioration of air quality;" as published in the July 1, 2006 Code of Federal Regulations.

(e) 40 CFR 52.21(b)(2)(i); "Approval and Promulgation of Implementation Plans, Prevention of significant deterioration of air quality;" as published in the July 1, 2006 Code of Federal Regulations.

(f) Section 111(a)(3) of the Clean Air Act; contained in 42 USC 7411; "Standards of performance for new stationary sources;" published January 19, 2004 in Supplement III of the 2000 Edition of the United States Code.

(g) Section 118 of the Clean Air Act; contained in 42 USC 7418; "Control of pollution from federal facilities;" published January 19, 2004 in Supplement III of the 2000 Edition of the United States Code.

Effective: 01/02/2007

R.C. 119.032 review dates: Exempt

CERTIFIED ELECTRONICALLY
Certification

12/19/2006
Date

Promulgated Under: 119.03
Statutory Authority: 3704.03(E)
Rule Amplifies: 3704.03(A), 3704.03(E)
Prior Effective Dates: 3/5/86

3745-16-02 **Good engineering practice stack height requirements.**

[Comment: For dates of non-regulatory government publications, publications of recognized organizations and associations, federal rules, and federal statutory provisions referenced in this rule, see the last paragraph of rule 3745-16-01 of the Administrative Code titled "Incorporation by reference."]

(A) The requirements of this rule shall apply to all new and existing air contaminant sources except:

(1) Stack heights in existence, or dispersion techniques implemented on or before December 31, 1970, except where pollutants are being emitted from such stacks or using such dispersion techniques by sources, as defined in Section 111(a)(3) of the Clean Air Act, which were constructed or reconstructed, or for which major modifications, as defined in 40 CFR 51.165(a)(1)(v)(A), 51.166(b)(2)(i) and 52.21(b)(2)(i), were carried out after December 31, 1970; or

(2) Coal-fired steam electric generating units subject to the provisions of Section 118 of the Clean Air Act, which commenced operation before July 1, 1957, and having stacks constructed under a construction contract awarded before February 8, 1974.

(B) Except as otherwise provided in paragraph (A) of this rule, any emission limitation imposed upon any source must not be affected by so much of any source's stack height that exceeds good engineering practice, nor by any other dispersion technique.

(C) Before adopting a new or revised emission limitation that is based on a good engineering practice stack height that exceeds the height allowed by paragraph (F)(1) or (F)(2) of rule 3745-16-01 of the Administrative Code, the director shall provide public notice of the availability of the demonstration study and shall provide an opportunity for a public hearing on it.

(D) This chapter of the Administrative Code does not authorize the director to order the reduction of the actual stack height of any source.

Effective: 01/02/2007

R.C. 119.032 review dates: Exempt

CERTIFIED ELECTRONICALLY
Certification

12/19/2006
Date

Promulgated Under: 119.03
Statutory Authority: 3704.03(E)
Rule Amplifies: 3704.03(A), 3704.03(E)
Prior Effective Dates: 3/5/86

Chapter 3745-17: Particulate Matter Standards

Contact: Jennifer Van Vlerah 614-644-3696
Jennifer.venvlerah@epa.ohio.gov

3745-17-01 **Definitions.**

[Comment: For dates of non-regulatory government publications, publications of recognized organizations and associations, federal rules, and federal statutory provisions referenced in this rule, see the "Incorporation by Reference" paragraph at the end of this rule.]

(A) Except as otherwise provided in this rule, the definitions in rule 3745-15-01 of the Administrative Code shall apply to this chapter.

(B) As used in Chapter 3745-17 of the Administrative Code:

(1) "Banked condition" means the condition where fuel is burned on the grates of fuel burning equipment at rates which are sufficient to maintain ignition only.

(2) "British thermal unit" or "Btu" means the amount of heat required to raise the temperature of one pound of water from fifty-nine degrees Fahrenheit to sixty degrees Fahrenheit at a constant pressure of one atmosphere.

(3) "Facility" means any building, structure, installation, operation, or combination thereof which contains one or more stationary source(s) of air contaminants. As used in paragraph (D) of rule 3745-17-08 of the Administrative Code, the definition of facility shall not include agricultural activities, such as the tilling of land, the harvesting of crops, the application of fertilizers, pesticides or herbicides, and grain drying, which are conducted on a farm.

(4) "Fuel" means wood, refuse, natural gas, coke oven gas, petroleum, coal, and any combustible solid, liquid, or gas derived from such materials.

(5) "Fuel burning equipment" means any furnace or boiler, and any appurtenances thereto such as stacks, ducting and similar apparatus, used in the process of burning fuel for the primary purpose of producing heat or power by indirect heat transfer, where the products of combustion do not come into contact with process materials.

(6) "Fugitive dust" means particulate matter which is emitted from any source by means other than a stack.

(7) "Fugitive dust source" means any source which emits fugitive dust or which emitted fugitive dust prior to the installation of any control equipment that was installed on or after February 15, 1972.

(8) "Grain elevator" means any plant or installation at which grain is unloaded, handled, cleaned, dried, stored, or loaded, except those located at the following: animal food, pet food or cereal manufacturers; breweries; livestock feedlots; wheat flour, wet corn, dry corn or rice mills; or soybean oil extraction plants.

(9) "Incinerator" means any equipment, machine, device, article, contrivance, structure, or part of a structure used to burn liquid, semi-solid or solid refuse or to process salvageable materials by burning other than by open burning as defined in rule 3745-19-01 of the Administrative Code.

(10) "OEPA" or "Ohio EPA" means the Ohio environmental protection agency.

(11) "Opacity" means the degree to which emissions reduce the transmission of light and obscure the view of the background.

(12) "Particulate emissions" means particulate matter measurable by the applicable test methods in 40 CFR Part 60, Appendix A, "Standards of Performance for New Stationary Sources".

(13) "Particulate matter" means any material, except water in uncombined form, that is or has been airborne, and exists as a liquid or a solid at standard conditions.

(14) "Permanent storage capacity" means grain storage capacity which is inside a building, bin or silo.

(15) "$PM_{2.5}$" means particulate matter with an aerodynamic diameter less than or equal to a nominal 2.5 micrometers as measured either by a reference method that is based on 40 CFR Part 50, Appendix L and designated in accordance with 40 CFR Part 53 or by an equivalent method designated in accordance with 40 CFR Part 53.

(16) "PM_{10}" means particulate matter with an aerodynamic diameter less than or equal to a nominal ten micrometers as measured either by a reference method that is based on 40 CFR Part 50, Appendix J and designated in accordance with 40 CFR Part 53 or by an equivalent method designated in accordance with 40 CFR Part 53.

(17) "Process weight" means the total weight of all materials introduced into the source operation, including solid fuels, but excluding gaseous fuels and liquid fuels when they are used solely as fuels, and excluding air introduced for the purpose of combustion.

(18) "Reasonably available control measures" means the control technology which enables a particular fugitive dust source to achieve the lowest particulate matter emission level possible and which is reasonably available considering technological feasibility and cost-effectiveness.

(19) "Refuse" means any discarded matter, or any matter which is to be reduced in volume, or otherwise changed in chemical or physical properties, in order to facilitate its discard, removal or disposal.

(20) "Salvageable material" means any material which is to be reduced in volume, or otherwise changed in chemical or physical properties, in order to facilitate its reuse.

(21) "Single fuel burning unit" means any single, enclosed combustion chamber in which fuel is burned for the primary purpose of producing heat or power by indirect heat transfer, where the products of combustion do not come into contact with process materials.

(22) "Stack" means any chimney, flue, conduit or duct, including the outlet of any air pollution control equipment, which is arranged to conduct emissions to the ambient air.

(23) "Stand-by fuel burning equipment" means any fuel burning equipment which is used only as a direct substitution for other fuel burning equipment for a limited period due to unpredictable and unavoidable breakdown or failure, or routine scheduled maintenance of such other fuel burning equipment.

(24) "Start-up" means the commencement of firing of fuel burning equipment from a cold, non-fired condition.

(25) "Stationary gas turbine" means an engine that is not self-propelled (although it may be mounted on a vehicle for portability), in which a turbine is driven by expanding hot combustion gases. Such an engine typically consists of an axial-flow air compressor, one or more combustion chambers, and a turbine. A gas turbine employed in a jet engine is not included in this definition.

(26) "Stationary small internal combustion engine" means an engine, other than an engine used to, or intended to, propel any vehicle, with a rated power of less than or equal to six hundred horsepower and in which combustion occurs within one or more cylinders, thereby converting heat energy into mechanical energy that can be used to drive an electric generator or other mechanical equipment.

(27) "Stationary large internal combustion engine" means an engine, other than an engine used to, or intended to, propel any vehicle, with a rated power of greater than six hundred horsepower and in which combustion occurs within one or more cylinders, thereby converting heat energy into mechanical energy that can be used to drive an electric generator or other mechanical equipment.

(28) "Topping-off" means that portion of a ship loading operation at a grain terminal during which:

(a) The top portion of a hold (not to exceed twenty-five per cent of the total volume of the hold) is filled with grain; and

(b) The control of particulate emissions through the use of tarpaulin covers and associated ventilation and control equipment is impractical or impossible.

(29) "Uncontrolled mass rate of emission" means the total weight rate of particulate emissions which are, or in the absence of control equipment would be, emitted from an air contaminant source when such source is operated at its maximum capacity.

(C) Incorporation by reference. This chapter includes references to certain matter or materials. The text of the incorporated materials is not included in the regulations contained in this chapter. The materials are hereby made a part of the regulations in this chapter. For materials subject to change, only the specific versions specified in the regulation are incorporated. Material is incorporated as it exists on the effective date of this rule. Except for subsequent annual publication of existing (unmodified) Code of Federal Regulation compilations, any amendment or revision to a referenced document is not incorporated unless and until this rule has been amended to specify the new dates.

(1) Availability. The materials incorporated by reference are available as follows:

(a) "Acid Rain Program Continuous Emission Monitoring Systems (CEMS) Field Audit Manual." Information and copies may be obtained by writing to: "US EPA (6204N), Attn: Matthew Boze, 1200 Pennsylvania Ave., NW, Washington, D.C. 20460." This document is also available in electronic format at http://www.epa.gov/airmarkets/monitoring/auditmanual/index.html. The manual can also be obtained for inspection and copying at most public libraries and "The State Library of Ohio."

(b) American Society for Testing Materials (ASTM). Information and copies of documents may be obtained by writing to: "ASTM International, 100 Bar Harbor Drive, P.O. Box C700, West Conshohocken, Pennsylvania 19426-2959." These documents are also available for purchase at http://www.astm.org. ASTM documents are also available for inspection and copying at most public libraries and "The State Library of Ohio."

(c) Code of Federal Regulations (CFR). Information and copies may be obtained by writing to: "Superintendent of Documents, Attn: New Orders, P.O. Box 371954, Pittsburgh, PA 15250-7954." The full text of the CFR is also available in electronic format at http://www.gpoaccess.gov/cfr/index.html. The CFR compilations are also available for inspection and copying at most public libraries and "The State Library of Ohio."

(d) Engineering Guides. Information and copies may be obtained by writing to: "Ohio EPA Division of Air Pollution Control, 122 S. Front Street, Columbus, OH 43215" or by calling (614) 644-2270. Engineering Guides are also available for downloading at http://www.epa.state.oh.us/dapc/engineer/eguides.html.

(e) EPA 340/1-86-010 and EPA 450/3-88-008. Information and copies may be obtained by writing to: "US EPA Office of Air Quality Planning and

Standards (OAQPS), Info CHIEF Help Desk, Mail Code C339-02 Research Triangle Park, NC 27711" or by calling (919) 541-1000. EPA 340/1-86-010 can also be obtained for inspection and copying at most public libraries and "The State Library of Ohio."

(f) "Standard Methods for the Examination of Water and Wastewater." Information and copies may be ordered by writing to: "American Public Health Association, Publications Sales, P.O. Box 753, Waldorf, MD 20604-0753," or by calling 1-301-893-1894. This document is also available for ordering at http://www.apha.org/. A copy of the document is also available for inspection and copying at most public libraries and "The State Library of Ohio."

(2) Incorporated materials.

(a) 40 CFR 50.6; "National primary and secondary ambient air quality standards for PM_{10};" 52 FR 24663, July 1, 1987, as amended at 62 FR 38711, July 18, 1997; 65 FR 80779, Dec. 22, 2000.

(b) 40 CFR 60.13; "Monitoring requirements;" 40 FR 46255, Oct. 6, 1975; 40 FR 59205, Dec. 22, 1975, as amended at 41 FR 35185, Aug. 20, 1976; 48 FR 13326, Mar. 30, 1983; 48 FR 23610, May 25, 1983; 48 FR 32986, July 20, 1983; 52 FR 9782, Mar. 26, 1987; 52 FR 17555, May 11, 1987; 52 FR 21007, June 4, 1987; 64 FR 7463, Feb. 12, 1999; 65 FR 48920, Aug. 10, 2000; 65 FR 61749, Oct. 17, 2000; 66 FR 44980, Aug. 27, 2001.

(c) 40 CFR Part 50, Appendix J; "Reference Method for the Determination of Particulate Matter as PM_{10} in the Atmosphere;" 36 FR 22384, Nov. 25, 1971; 52 FR 24664, July 1, 1987; 52 FR 29467, Aug. 7, 1987.

(d) 40 CFR Part 50, Appendix K; "Reference Method for the Determination of Particulate Matter as PM in the Atmosphere;" 52 FR 24664, July 1, 1987; 52 FR 29467, Aug. 7, 1987.

(e) 40 CFR Part 50, Appendix L; "Reference Method for the Determination of Fine Particulate Matter as PM in the Atmosphere;" 62 FR 38714, July 18, 1997, as amended at 64 FR 19719, Apr. 22, 1999.

(f) 40 CFR Part 50, Appendix N; "Interpretation of the National Ambient Air Quality Standards for PM;" 62 FR 38755, July 18, 1997, as amended at 69 FR 45595, July 30, 2004.

(g) 40 CFR Part 51, Appendix P; "Minimum Emission Monitoring Requirements;" 40 FR 46247, Oct. 6, 1975, as amended at 51 FR 40675, Nov. 7, 1986.

(h) 40 CFR Part 53; "Ambient Air Monitoring Reference and Equivalent Methods;" as published in the July 1, 2007 Code of Federal Regulations.

(i) 40 CFR Part 60, Appendix A; "Standards of Performance for New Stationary Sources;" as published in the July 1, 2007 Code of Federal Regulations.

(j) 40 CFR Part 60, Appendix B; "Performance Specifications;" 48 FR 13327, Mar. 30, 1983 and 48 FR 23611, May 25, 1983, as amended at 48 FR 32986, July 20, 1983; 51 FR 31701, Aug. 5, 1985; 52 FR 17556, May 11, 1987; 52 FR 30675, Aug. 18, 1987; 52 FR 34650, Sept. 14, 1987; 53 FR 7515, Mar. 9, 1988; 53 FR 41335, Oct. 21, 1988; 55 FR 18876, May 7, 1990; 55 FR 40178, Oct. 2, 1990; 55 FR 47474, Nov. 14, 1990; 56 FR 5526, Feb. 11, 1991; 59 FR 64593, Dec. 15, 1994; 64 FR 53032, Sept. 30, 1999; 65 FR 62130, 62144, Oct. 17, 2000; 65 FR 48920, Aug. 10, 2000; 69 FR 1802, Jan. 12, 2004.

(k) "Acid Rain Program Continuous Emission Monitoring Systems (CEMS) Field Audit Manual" July 16, 2003.

(l) ASTM D240-02; "Standard Test Method for Heat of Combustion of Liquid Hydrocarbon Fuels by Bomb Calorimeter;" undated.

(m) ASTM D1826-94; "Standard Test Method for Calorific (Heating) Value of Gases in Natural Gas Range by Continuous Recording Calorimeter;" 2003.

(n) ASTM D3174-04; "Standard Test Method for Ash in the Analysis Sample of Coal and Coke from Coal;" approved July 1, 2004.

(o) ASTM D5685-05; "Standard Specification for Fiberglass (Glass-Fiber-Reinforced Thermosetting-Resin) Pressure Pipe Fittings;" undated.

(p) ASTM E870-82; "Standard Test Methods for Analysis of Wood Fuels;" 1998.

(q) EPA 340/1-86-010; "Recommended Quality Assurance Procedures Opacity Continuous Emission Monitoring Systems;" February 1986.

(r) EPA 450/3-88-008; "Control of Open Fugitive Dust Sources;" September, 1988.

(s) Engineering Guide #13; "Procedures for EVEL Determinations;" June 20, 1997.

(t) Engineering Guide #15; "Testing Procedure to Establish EVEL's for Identical Sources;" June 20, 1997.

(u) Section 209(C); Standard Methods for the Examination of Water and Wastewater;" 20th Edition, published 2005.

(v) USEPA Method 5; contained in 40 CFR Part 60, Appendix A-3; "Determination of particulate matter emissions from stationary sources;" as published in the July 1, 2007 Code of Federal Regulations.

(w) USEPA Method 9; contained in 40 CFR Part 60, Appendix A-4; "Visual Determination of the Opacity of Emissions From Stationary Sources;" as published in the July 1, 2007 Code of Federal Regulations.

(x) USEPA Method 22; contained in 40 CFR Part 60, Appendix A; "Visual determination of fugitive emissions from material sources and smoke emissions from flares;" as published in the July 1, 2007 Code of Federal Regulations.

(y) USEPA Performance Specification 1; "Specifications and Test Procedures for Opacity Continuous Emission Monitoring Systems in Stationary Sources;" contained in 40 CFR Part 60, Appendix B; 48 FR 13327, Mar. 30, 1983 and 48 FR 23611, May 25, 1983, as amended at 48 FR 32986, July 20, 1983; 51 FR 31701, Aug. 5, 1985; 52 FR 17556, May 11, 1987; 52 FR 30675, Aug. 18, 1987; 52 FR 34650, Sep. 14, 1987; 53 FR 7515, Mar. 9, 1988; 53 FR 41335, Oct. 21, 1988; 55 FR 18876, May 7, 1990; 55 FR 40178, Oct. 2, 1990; 55 FR 47474, Nov. 14, 1990; 56 FR 5526, Feb. 11, 1991; 59 FR 64593, Dec. 15, 1994; 64 FR 53032, Sep. 30, 1999; 65 FR 62130, 62144, Oct. 17, 2000; 65 FR 48920, Aug. 10, 2000; 69 FR 1802, Jan. 12, 2004; 70 FR 28673, May 18, 2005; 71 FR 55127, Sept. 21, 2006; 72 FR 32767, June 13, 2007.

Effective: 02/01/2008

R.C. 119.032 review dates: 09/12/2007 and 02/01/2013

CERTIFIED ELECTRONICALLY
Certification

01/22/2008
Date

Promulgated Under: 119.03
Statutory Authority: 3704.03(E)
Rule Amplifies: 3704.03(A), 3704.03(E)
Prior Effective Dates: 8/7/1972, 6/18/1980, 10/1/1983, 6/14/1991, 12/6/1991, 1/31/1998, 4/14/2003

3745-17-02 **Ambient air quality standards.**

This rule was rescinded as of 4/18/09.

The rule language was moved to OAC Rule 3745-25-02.

3745-17-03 **Measurement methods and procedures.**

[Comment: For dates of non-regulatory government publications, publications of recognized organizations and associations, federal rules, and federal statutory provisions referenced in this rule, see the last paragraph of rule 3745-17-01 of the Administrative Code titled "Incorporation by reference."]

(A) For purposes of ascertaining, defining, and measuring ambient air quality, $PM_{2.5}$ and PM_{10} shall be measured by the methods specified in paragraphs (B)(15) and (B)(16), respectively, of rule 3745-17-01 of the Administrative Code. Such measurements for PM_{10} shall be corrected to standard conditions for purposes of comparing measurements with the ambient air quality standards set forth in rule 3745-25-02 of the Administrative Code.

(B) Emissions test methods and procedures for all new and existing sources.

(1) For the purpose of determining compliance with paragraph (A)(1) of rule 3745-17-07 of the Administrative Code, visible particulate emissions shall be determined according to the following:

(a) Except as provided in paragraph (B)(1)(b) of this rule, "USEPA Method 9" shall be employed.

(b) As an alternative to the compliance procedures specified in paragraph (B)(1)(a) of this rule, coal-fired boilers with heat input capacities equal to or greater than two hundred fifty million Btu per hour that are controlled with either baghouses or electrostatic precipitators may determine compliance with the visible particulate emission limitations specified in paragraph (A)(1) of rule 3745-17-07 of the Administrative Code through the use of continuous opacity monitoring data. The continuous opacity monitoring system shall comply with the requirements specified in 40 CFR 60.13 and shall be certified in accordance with the requirements of "USEPA Performance Specification 1." (The continuous opacity monitoring system consists of all the equipment used to acquire data and includes the data recording/processing hardware and software.) During each calendar quarter, the permittee shall be deemed in compliance with paragraph (A)(1) of rule 3745-17-07 of the Administrative Code if the following conditions are met:

(i) The nonexempt opacity values in excess of twenty per cent opacity are less than 1.10 per cent of the six-minute average opacity values. (Exempt opacity values are defined in paragraphs (A)(1)(b), (A)(2), and (A)(3) of rule 3745-17-07 of the Administrative Code.)

(ii) None of the nonexempt six-minute average opacity values exceeds sixty per cent.

(iii) The total amount of time, in hours, of exempt and nonexempt opacity values greater than twenty per cent and less than sixty per cent (not including start-up, shutdown, and malfunction exemptions provided in paragraphs (A)(2) and (A)(3) of rule 3745-17-07 of the Administrative Code) does not exceed the product of 0.10 times the actual number of hours the emissions unit was in operation during the calendar quarter.

In the event of a discrepancy between the continuous opacity monitoring data and any observations performed in accordance with paragraph (B)(1)(a) of this rule during the same time period, an evaluation may be performed by the Ohio EPA to assess the accuracy of the continuous opacity monitoring data (which may include an audit of the continuous opacity monitoring system performed in accordance with EPA 340/1-86-010 (recommended quality assurance procedures for opacity continuous emission monitoring systems) and "Acid Rain Program Continuous Emission Monitoring Systems (CEMS) Field Audit Manual" and the validity of the observations performed in accordance with paragraph (B)(1)(a) of this rule. The Ohio EPA may accept and utilize any data or observation it finds credible. The permittee is not precluded from using any credible evidence in defense of any enforcement action that may be initiated by the Ohio EPA.

(2) For the purpose of determining compliance with paragraph (B)(2) of rule 3745-17-07 of the Administrative Code, pertaining to visible particulate emissions from coke oven batteries:

(a) Charging operations:

(i) The charging period shall begin when the coal from the charging system starts to enter the oven and shall end when the last charge port lid is replaced. Such charging period shall not include the period of time during which the port lids are reopened in order to sweep spilled coal into the oven.

(ii) The observer shall stand on the topside of the coke oven battery such that a good view of all charge ports of the oven being charged and the charging system is possible. The observer may change position to obtain a clear view of all oven ports, drop sleeves, and hoppers. During the charging period, the observer shall watch all the potential emission sources including the charge ports and the entire charging system. Upon observing the release of any visible particulate emission, an accumulative stopwatch shall be started. The watch shall be stopped when the visible particulate emission stops and shall be restarted when

a visible particulate emission reappears. The observer shall continue this procedure for the entire charging period. If visible particulate emissions should occur simultaneously from several points during a charge, the visible particulate emissions shall be timed collectively as one continuous visible particulate emission. Furthermore, visible particulate emissions which may start from one source immediately after those from another source shall be timed as one continuous visible particulate emission. The following visible particulate emissions shall not be timed: steam vapor, visible particulate emissions from burning coal that is spilled on top of the oven or oven lid during charging, visible particulate emissions emitted from any equipment other than the charging system or charging ports, visible particulate emissions from closed standpipes during charging, visible particulate emissions emitted from coke oven doors which may rise above the battery and which may be windblown across its topside, and visible particulate emissions that drift from the top of the charging system, but have already been timed as a visible particulate emission from the drop sleeve below the hopper. The time recorded on the stopwatch shall represent the total time that visible particulate emissions are observed during a charge. The number of seconds of visible particulate emissions observed for each charge shall be recorded on a data sheet.

(iii) A minimum of six consecutive charges shall be observed and the time in seconds of visible particulate emissions during such charges shall be totalled. If the observations of a set of consecutive charges is interrupted by an event not in the control of an observer, then the data for the interrupted charge(s) shall be discarded and additional charge(s) shall be observed until the total number of consecutive charges equals at least six. For purposes of this paragraph, charges immediately preceding and following any interrupted or discarded charge(s) shall be deemed consecutive.

(b) Offtake piping and charging hole lids:

(i) The observer shall walk down the length of the top of the battery and shall complete the inspection in an expeditious manner consistent with the safety of the observer. When safety conditions permit, the observer will walk near the center of the battery, but may deviate from this path to obtain a better view of any lid or offtake piping system. Separate traverses may be performed for offtake piping and charging hole lids. If the battery has two collector mains, the observer may make two traverses when observing visible particulate emissions from offtake piping. If an observer elects to make two traverses for a battery which has two collector mains, the observer shall inspect one collector main during the first traverse and inspect the other collector main during the second traverse. During each traverse, the observer shall record the

time of the beginning and end of each traverse and the identity of any charging hole or offtake piping system having visible particulate emissions.

(ii) Visible particulate emissions from offtake piping shall include emissions from cracks and/or defects in the piping, emissions from the jointure of the battery to the standpipe, emissions from the standpipe to the gooseneck and gooseneck to the collector main, emissions from the seal between the gooseneck and gooseneck lid, and emissions from opened offtake lids. Visible particulate emissions from charging holes shall include emissions from the seal between the charging hole or stationary jumper pipe lid and its casting, emissions from the charging hole or stationary jumper pipe casting/battery interface, and emissions from opened charging holes or stationary jumper pipe lids. Visible particulate emissions which shall not be included are emissions caused by maintenance work in progress at an oven, emissions caused by the vaporization of wet luting materials, emissions caused by burning or smoldering excess topside coal, and emissions from charging ports and offtake piping during the charging operation. Visible particulate emissions from open offtake piping and charging holes, from a maximum of three ovens, shall be exempt. Regardless of the number of points from which visible particulate emissions are observed from any one offtake piping system, the maximum entry for any oven with a single offtake system shall be one and the maximum entry for any oven with two offtake piping systems shall be two. The maximum number of charging hole leaks recorded for any oven shall not exceed the number of charging holes on that oven.

(iii) The percentage of charging holes and offtake piping with visible particulate emissions shall be determined by totalling the number of charging holes or offtake piping with visible particulate emissions, including that number of opened charging holes and offtake piping with visible particulate emissions which exceeds the amount which is allowed for three ovens, dividing that number by the total number of observed charging holes or offtake piping on operating ovens, and multiplying the result by one hundred per cent. For purposes of this paragraph, any oven which is not out of service for rebuild or maintenance work that is extensive enough to require the oven to be skipped in the charging sequence shall constitute an operating oven. Further, any opened charging hole or offtake piping lids on operating ovens shall be included as observed charging holes and offtake piping.

(c) Oven doors:

(i) The observer shall observe visible particulate emissions by completely walking around the coke oven battery at a steady distance from a

position just outside the pusher machine and quencher car tracks as close to the battery as safety and visibility conditions permit. The observer shall traverse each side of a battery expeditiously, recording the time of the beginning and end of each side traverse, the identity of each door having visible particulate emissions, and the identity of any door not observable during the traverse. A visible particulate emission from an individual door shall be noted on an inspection sheet when an observer determines any visible particulate emissions are occurring from any location on the perimeter of a coke oven door or chuck door. Visible particulate emissions observed at the top of the battery above a specific oven door but not clearly attributable to such door shall not be counted in this procedure. An observer shall observe each oven door only once while scanning the perimeter for any visible particulate emissions. After a brief scan of an oven door, the observer shall move along his/her traverse, checking subsequent doors on the battery in a like manner. If a temporary machine obstruction occurs which blocks the view of a series of ovens, the ovens shall be bypassed and the remaining oven doors on that side of the battery shall be observed. After the traverse of such side of the battery, the bypassed oven doors and only those oven doors, may be reobserved. After completing one side, the observer shall proceed directly to the opposite side of the battery and proceed to perform a like traverse while repeating the above procedures. A row of two or more continuous batteries may be inspected by observing all of the pusher side doors and then all of the coke side doors.

(ii) The percentage of oven doors with visible particulate emissions shall be determined by totalling the number of doors with visible particulate emissions, dividing that sum by the total number of observed doors on operating ovens, and multiplying the result by one hundred per cent. For purposes of this paragraph, any oven which is not out of service for a rebuild or maintenance work that is extensive enough to require that oven to be skipped in the charging sequence shall constitute an operating oven. Further, any doors that are removed from operating ovens shall constitute unobserved doors.

(d) For any pushing operations, visible particulate emissions shall be determined according to "USEPA Method 9" with the following modifications:

(i) Paragraph 2.5 ("Data Reduction") of "USEPA Method 9" shall not be used; and

(ii) Visible particulate emission readings shall be recorded at fifteen-second intervals during each pushing operation observed and the average reading during each such operation shall be determined by summing

the opacity readings and dividing this sum by the number of observations during that pushing operation.

(3) For the purpose of determining compliance with paragraphs (B)(1), (B)(3), (B)(7)(a)(i), (B)(7)(b), (B)(7)(c), and (B)(8)(a) to (B)(8)(d) of rule 3745-17-07 of the Administrative Code, paragraphs (C)(3)(c), (D)(3), (F)(4)(c), (I)(1), (L)(3), (O)(1), (P)(2), (V)(4)(c), (W)(2), (X)(2), and (X)(3) of rule 3745-17-12 of the Administrative Code, or with paragraph (D)(4)(a) of rule 3745-17-13 of the Administrative Code, visible emissions of fugitive dust shall be determined according to "USEPA Method 9" with the following modifications:

(a) For paragraphs (B)(1), (B)(7)(b), (B)(7)(c), (B)(8)(b), (B)(8)(d), and (B)(9) of rule 3745-17-07 of the Administrative Code, the data reduction and average opacity calculation shall be based upon sets of twelve consecutive visible emission observations recorded at fifteen-second intervals.

(b) Opacity observations shall be made from a position that provides the observer a clear view of the source and the fugitive dust with the sun behind the observer. A position at least fifteen feet from the source is recommended. To the extent possible, the line of sight should be approximately perpendicular to the flow of fugitive dust and to the longer axis of the emissions. Except as provided in paragraphs (B)(3)(d) and (B)(3)(e) of this rule, opacity observations shall be made for the point of highest opacity within the fugitive dust. Since the highest opacity usually occurs immediately above or downwind of the source, the observer should normally concentrate on the area(s) of the plume close to the source. For purposes of paragraphs (B)(7)(b) and (B)(8)(b) of rule 3745-17-07 of the Administrative Code, observations shall be made where the fugitive dust plume is distinctly separate from the falling material and from the surface of the pile.

(c) <Reserved>.

(d) For paragraphs (B)(7)(a)(i), (B)(8)(a), and (B)(8)(c) of rule 3745-17-07 of the Administrative Code and paragraphs (I)(1), (O)(1), and (P)(2) of rule 3745-17-12 of the Administrative Code:

(i) A data set shall consist of twelve observations based on four uninterrupted vehicle passes, three observations per vehicle pass, using "USEPA Method 9." The initial observation shall be taken immediately after passage of the first vehicle, at the point of highest opacity within the fugitive dust, and at four feet above the surface of the roadway or parking area. Two additional observations shall be taken at the same point as the initial observation and at five seconds and ten seconds after the initial reading. The same procedure shall be conducted for the next three vehicle passes. If any interruption in observations during any

vehicle pass occurs, the observation(s) taken during that vehicle pass shall be discarded and the next vehicle pass shall be observed. For vehicle traffic on top of any material storage pile, the observer may observe passes of the same vehicle or vehicles, at identical of different points atop the pile, in order to obtain readings for four vehicle passes.

(ii) The data reduction and average opacity calculation shall be based upon the average of twelve observations in each data set.

(e) For paragraph (B)(7)(c) of rule 3745-17-07 of the Administrative Code, observations of fugitive dust resulting from a vehicle's movement upon a coal storage pile shall be made at a point no less than one vehicle length from the rear of the vehicle and at an elevation no lower than the maximum height of the vehicle. For purposes of this rule, vehicle length and height shall be based upon the length and height of the vehicle being observed.

(4) For the purpose of determining compliance with paragraphs (B)(4) to (B)(6), (B)(7)(a)(ii), and (B)(7)(d) of rule 3745-17-07 of the Administrative Code, paragraphs (B), (C)(1), (C)(2), (E), (F)(1) to (F)(3), (K), (M)(1), (M)(2), (Q)(1), (S)(4)(b), (U)(1), (U)(2), (V)(1) to (V)(3), (W)(1), (X)(1), (X)(4), (Y)(1) to (Y)(3), and (Z) of rule 3745-17-12 of the Administrative Code, or with paragraph (B) of rule 3745-17-13 of the Administrative Code, visible emissions of fugitive dust shall be determined according to "USEPA Method 22" with the following modifications:

(a) If the observer's view is obscured and observations must be terminated prior to completing the necessary or desired observation period, the observer shall clearly note this fact on the observation form. When the observer's view of the source is no longer obscured, the observations shall recommence to complete the observation period.

(b) The observer shall identify on the observation form all interruptions due to rest breaks.

(c) For the purpose of determining compliance with the applicable visible emission limitation, the observations, excluding break periods and periods of obscured vision, shall be considered continuous.

(d) For any roadway or parking area, the observer shall determine the presence and duration of visible particulate matter at the same point of the potential emissions and at a height approximately four feet above the surface of the roadway or parking area.

(5) Visible particulate emission readings other than those referenced in paragraph (B)(4) of this rule shall be determined by observers qualified according to tests and procedures set forth in "USEPA Method 9."

(6) The director may refuse to accept the results of emission tests conducted pursuant to paragraphs (B)(7) to (B)(10) of this rule which are not conducted with prior review and approval of the test specifications by the director. Test specifications must be submitted for this purpose at least thirty days before the proposed test date. The director will advise an entity of any deficiencies in the proposed test specifications as expeditiously as practicable so as to minimize any disruption of the proposed testing schedule.

(7) For the purpose of determining compliance with paragraphs (B)(3) and (B)(4) of rule 3745-17-08 of the Administrative Code:

(a) The amount of particulate emissions shall be determined by the test methods specified in paragraph (B)(12) of rule 3745-17-01 of the Administrative Code.

(b) For electric arc furnaces at iron foundries, steel foundries and iron and steel mills, the sampling and measurement of the particulate emissions shall be performed only during those operating intervals commencing with the addition of cold scrap to the furnace and ending with the completion of the tapping of the furnace.

(c) For argon-oxygen decarburization vessels, the sampling and measurement of the particulate emissions shall be performed only during those operating intervals commencing with the pouring of hot metal into the vessel and ending with the completion of the tapping of the vessel.

(d) For basic oxygen furnaces, the sampling and measurement of the particulate emissions shall be performed only during those operating intervals commencing with the addition of hot metal to the furnace and ending with the completion of the tapping of the furnace.

(e) For hot metal transfer operations, the sampling and measurement of the particulate emissions shall be performed only during those operating intervals when hot metal is being poured.

(f) For hot metal desulfurization operations, the sampling and measurement of the particulate emissions shall be performed only during those operating intervals commencing with the initial injection of the desulfurization agent into the hot metal and ending with the completion of the injection process.

(g) For blast furnace casthouses, the sampling and measurement of the particulate emissions shall be performed only during the casting operation, commencing with the opening of the tap hole and ending one minute after the positioning of the mud gun to plug the tap hole.

(h) For pushing operations at coke oven batteries, one point of a probe traverse shall be sampled during each pushing operation and the sampling and measurement of the particulate emissions shall be performed only during those operating intervals commencing with the first movement of the ram and ending with the full extension of the ram plus ten seconds or with the first movement of the quench car, whichever occurs first.

(8) For the purpose of determining compliance with rule 3745-17-09 of the Administrative Code:

(a) The amount of particulate emissions from an incinerator shall be determined by test methods specified in paragraph (B)(12) of rule 3745-17-01 of the Administrative Code. Emission tests shall be conducted at maximum burning capacity of the incinerator.

(b) The maximum burning capacity of an incinerator shall be the manufacturer's or designer's guaranteed maximum rate or such other rate as may be determined by the director in accordance with good engineering practices. In case of conflict, the determination made by the director shall govern.

(9) For the purpose of determining compliance with rule 3745-17-10 of the Administrative Code and paragraphs (N)(1), (N)(2), (O)(7), (O)(8)(a), (P)(1), (P)(7), and (P)(8) of rule 3745-17-12 of the Administrative Code:

(a) The amount of particulate emissions shall be determined by test methods specified in paragraph (B)(12) of rule 3745-17-01 of the Administrative Code, except that for "USEPA Method 5" the probe and filter holder heating systems in the sampling train shall be set to provide a gas temperature no greater than three hundred twenty degrees Fahrenheit (one hundred sixty degrees Celsius).

(b) The heat content of fuels shall be determined according to ASTM D5685-05 or ASTM E870-82 for solid fuels, ASTM D240-02 for liquid fuels, and ASTM D1826-94 for gaseous fuels.

(c) The ash content of coal shall be determined according to ASTM D3174-04.

(10) For the purpose of determining compliance with rule 3745-17-11 of the Administrative Code, paragraphs (C)(3)(b), (D)(2), (F)(4)(b), (F)(5), (G), (H), (I)(2) to (I)(14), (I)(16), (I)(17), (I)(19) to (I)(30), (I)(38) to (I)(40), (I)(43), (I)(45), (I)(46), (I)(48), (J), (L)(2), (M)(3), (N)(3), (N)(4), (O)(3) to (O)(6), (O)(9), (O)(10), (P)(3)(a), (P)(4) to (P)(6), (P)(10), (P)(11), (Q)(2), (R)(1), (S)(1) to (S)(4)(a), (T), (U)(3), (V)(4)(b), and (Y)(4) of rule 3745-17-12 of the Administrative Code, and paragraphs (D)(2), (D)(3), (D)(4)(b) to (D)(4)(d), (D)(5) and (D)(6) of rule 3745-17-13 of the Administrative Code:

(a) The amount of particulate emissions shall be determined by test methods specified in paragraph (B)(11) of rule 3745-17-01 of the Administrative Code.

(b) The controlled mass rate of particulate emissions from sources equipped with control equipment, or the uncontrolled mass rate of particulate emissions from sources not equipped with control equipment, shall be determined by sampling and other measurements made at the air contaminant source or sources prior to the point at which air contaminants are emitted to the ambient air. For sources equipped with control equipment, the uncontrolled mass rate of emission may be determined by either sampling in the stack upstream from the inlet of the control equipment or by the use of other techniques accepted by the director.

(c) For coke quench towers, the concentration of total dissolved solids in the quench water shall be determined according to Section 209(C), "Standard Methods for the Examination of Water and Wastewater," using a drying temperature between one hundred three and one hundred five degrees Celsius. Analyses shall be performed on grab samples of the quench water as applied to the coke. Samples shall be collected at a minimum of five days per week per quench tower and analyzed to report a weekly average concentration for each quench tower. Samples for each week must be analyzed either:

(i) Separately, with daily concentrations determined and averaged as a weekly average, or

(ii) As one composite sample, with equal volumes of each day's sample combined to form the composite sample.

(C) Continuous emission monitoring requirements for measuring opacity for "Appendix P" facilities.

(1) Any facility subject to 40 CFR Part 51, Appendix P, "Minimum Emission Monitoring Requirements," shall operate and maintain a continuous emission monitoring system (CEMS) for measuring opacity. The CEMS shall comply with all specifications outlined in 40 CFR Part 60, Appendix B, "Performance Specifications." The CEMS must be capable of providing external calibration filter access in accordance with Section 5.1.9 of "USEPA Performance Specification 1."

(2) Any owner or operator of a facility that meets the applicability requirements specified in paragraph (C)(1) of this rule shall submit reports to the director of excess emissions for each calendar quarter within thirty days following the end of each calendar quarter. The reports shall include, but not be limited to, the times and values of all six-minute average readings of opacity above the

applicable standard(s), along with the dates, magnitudes (per cent opacity), reasons (if known), and corrective actions taken (if any). In addition, the reports shall include the dates and times of each period during which the continuous emission monitoring system was inoperative, except for zero and span checks, and the nature of system repairs or adjustments.

Effective: 04/18/2009

R.C. 119.032 review dates: 01/26/2009 and 04/18/2014

CERTIFIED ELECTRONICALLY
Certification

04/08/2009
Date

Promulgated Under: 119.03
Statutory Authority: 3704.03(E)
Rule Amplifies: 3704.03(A), 3704.03(E)
Prior Effective Dates: 12/31/70, 6/18/80, 10/15/83, 6/14/91, 12/6/91, 11/15/95, 1/31/98, 4/14/03, 02/01/08

3745-17-04 **Compliance time schedules.**

(A) Certification and permit application requirements.

(1) Except as otherwise provided in paragraph (A)(2) of this rule, by no later than October 1, 1980, any owner or operator of an air contaminant source subject to paragraph (B)(2) of rule 3745-17-07 of the Administrative Code or of a fugitive dust source subject to paragraph (D) of rule 3745-17-08 of the Administrative Code, as those rules existed on June 18, 1980, shall either:

(a) Certify in writing to the director that such source is in compliance with all of the following which are applicable: paragraph (B)(2) of rule 3745-17-07 of the Administrative Code and paragraph (B) of rule 3745-17-08 of the Administrative Code. Such certification shall include: equipment description, Ohio EPA permit application number (if assigned), and all necessary data (consistent with the appropriate permit application appendices) and calculations which confirm the compliance status. The certification shall also include an application for a permit-to-operate such source in accordance with rule 3745-35-02 of the Administrative Code if such source does not possess an effective permit; or

(b) Submit an application for a permit-to-operate or an application for a modification to a permit-to-operate in accordance with rule 3745-35-02 of the Administrative Code. Such application shall include a final control plan and a compliance schedule which will bring the source into compliance with paragraph (B)(2) of rule 3745-17-07 of the Administrative Code and paragraph (B) of rule 3745-17-08 of the Administrative Code as expeditiously as practicable but in no event later than the dates specified in paragraph (B) of this rule.

(2) Any owner or operator of an air contaminant source, which is subject to the requirements of paragraph (D) of rule 3745-17-08 of the Administrative Code, as such rule existed on August 1, 1982, and which is located in Madison township, Sandusky county, Ohio, shall comply with the certification and permit application requirements in paragraph (A)(1) of this rule by no later than October 1, 1982.

(3) Any certification and/or application required by paragraph (A)(1) of this rule, or any permit-to-operate issued by the director, may include multiple, similar fugitive dust sources located at a specified facility, if such similar fugitive dust sources fall within one of the following general source categories: storage piles, mineral extraction operations, material handling operations, or roads and parking lots. Where appropriate, the certification, application or permit-to-operate may specify such similar fugitive dust sources and their associated control measures by their general source categories.

(4) By no later than October 1, 1991, any owner or operator of an air contaminant source subject to rule 3745-17-12 of the Administrative Code, as such rule existed on June 14, 1991, shall comply with the requirements in either of the following paragraphs:

(a) Certify in writing to the director that such source is in compliance with rule 3745-17-12 of the Administrative Code. Such certification shall include: equipment description, Ohio EPA permit application number, and all necessary data (consistent with the appropriate permit application appendices) and calculations which confirm the compliance status. The certification shall also include an application for a permit-to-operate such source in accordance with rule 3745-35-02 of the Administrative Code if such source does not possess an effective permit.

(b) Submit an application for a permit-to-operate or an application for a modification in accordance with rule 3745-35-02 of the Administrative Code. Such application shall include a final control plan and a compliance schedule which will bring the source into compliance with rule 3745-17-12 of the Administrative Code as expeditiously as practicable, but in no event later than the dates specified in paragraph (B) of this rule.

(5) By no later than January 1, 1992, any owner or operator of an air contaminant source subject to rule 3745-17-13 of the Administrative Code, as such rule existed on December 6, 1991, shall comply with the requirements in either of the following paragraphs:

(a) Certify in writing to the director that such source is in compliance with rule 3745-17-13 of the Administrative Code. Such certification shall include: equipment description, Ohio EPA permit application number, and all necessary data (consistent with the appropriate permit application appendices) and calculations which confirm the compliance status. The certification shall also include an application for a permit-to-operate such source in accordance with rule 3745-35-02 of the Administrative Code if such source does not possess an effective permit.

(b) Submit an application for a permit-to-operate or an application for a modification in accordance with rule 3745-35-02 of the Administrative Code. Such application shall include a final control plan and a compliance schedule which will bring the source into compliance with rule 3745-17-13 of the Administrative Code as expeditiously as practicable, but in no event later than the dates specified in paragraph (B) of this rule.

(6) By no later than October 15, 1983, the "Columbus and Southern Ohio Electric Company, Conesville Station" (OEPA premise number 0616000000) or any subsequent owner or operator shall submit an application for a permit-to-operate

in accordance with rule 3745-35-02 of the Administrative Code for boiler number four (OEPA source number B004). Such application shall include a final control plan and a compliance schedule which will bring the source into compliance with paragraph (C)(6) of rule 3745-17-10 of the Administrative Code as expeditiously as practicable but in no event later than the date specified in paragraph (B)(4) of this rule.

(B) Compliance time schedules.

(1) Any owner or operator of an air contaminant source, which is subject to the requirements of rule 3745-17-07 of the Administrative Code, shall achieve compliance with said requirements by the following deadlines;

(a) For paragraph (A) of rule 3745-17-07 of the Administrative Code, by June 18, 1980.

(b) For paragraphs (B)(2)(b), (B)(2)(c), and (B)(2)(e) of rule 3745-17-07 of the Administrative Code, by December 31, 1982.

(c) For paragraphs (B)(2)(a) and (B)(2)(d)(ii) of rule 3745-17-07 of the Administrative Code, by October 1, 1983.

(d) For paragraphs (B)(2)(d)(i) and (B)(3) to (B)(6) of rule 3745-17-07 of the Administrative Code, by June 14, 1991.

(e) For paragraphs (B)(7) and (B)(10) of rule 3745-17-07 of the Administrative Code, by January 31, 1998.

(2) Except as otherwise provided in paragraph (B)(3) of this rule, any owner or operator of a fugitive dust source, which is subject to paragraph (D) of rule 3745-17-08 of the Administrative Code, shall achieve compliance with any applicable requirements of paragraph (B) of rule 3745-17-08 of the Administrative Code as expeditiously as practicable, but not later than the deadlines established in the following schedules:

(a) For paragraphs (B)(2), (B)(7) and (B)(8) of rule 3745-17-08 of the Administrative Code, by August 1, 1981.

(b) For paragraph (B)(6) of rule 3745-17-08 of the Administrative Code, by January 1, 1982.

(c) For paragraphs (B)(3) and (B)(4) of rule 3745-17-08 of the Administrative Code and any other reasonably available control measures not specifically described in rule 3745-17-08 of the Administrative Code, by December 31, 1982.

(3) Any owner or operator of an air contaminant source, which is subject to the requirements of paragraph (D) of rule 3745-17-08 of the Administrative Code and which is located in Madison township, Sandusky county, Ohio, shall achieve compliance with the requirements of paragraph (B) of rule 3745-17-08 of the Administrative Code as expeditiously as practicable, but in no event later than the deadlines in the following schedules:

(a) For paragraphs (B)(2), (B)(7) and (B)(8) of rule 3745-17-08 of the Administrative Code, by August 1, 1983.

(b) For paragraph (B)(6) of rule 3745-17-08 of the Administrative Code, by January 1, 1984.

(c) For paragraph (B)(3) of rule 3745-17-08 of the Administrative Code and any other reasonably available control measures not specifically described in rule 3745-17-08 of the Administrative Code, by January 1, 1985.

(4) "Columbus and Southern Ohio Electric Company, Conesville Station" or any subsequent owner or operator of the "Columbus and Southern Ohio Electric Company, Conesville Station Facility, Rural Free Delivery 1, Conesville, Ohio" shall achieve compliance with the requirements of paragraph (C)(6)(b) of rule 3745-17-10 of the Administrative Code as expeditiously as practicable, but in no event later than June 19, 1984.

(5) Any owner or operator of an air contaminant source, which is subject to the requirements of rule 3745-17-11 of the Administrative Code, shall achieve compliance with said requirements as expeditiously as practicable, but not later than the deadlines established in the following schedules:

(a) For paragraphs (B)(1) to (B)(3) of rule 3745-17-11 of the Administrative Code, by April 15, 1977.

(b) For paragraph (B)(4) of rule 3745-17-11 of the Administrative Code, by June 14, 1991.

(c) For paragraphs (B)(5) and (B)(6) of rule 3745-17-11 of the Administrative Code, by January 31, 1998.

(6) Any owner or operator of an air contaminant source, which is subject to the requirements of rule 3745-17-12 of the Administrative Code, shall achieve compliance with said requirements as expeditiously as practicable, but not later than the deadlines established in the following schedules:

(a) For paragraphs (B), (C)(3)(c)(i), (F)(3), (G), (I)(3), (I)(4), (I)(11) to (I)(14), (I)(17), (I)(19), (I((20), (I)(22) to (I)(27), (I)(29), (I)(38)(a), (I)(39)(a), (I)(40)(a), (I)(46), (M)(3), (N), (O)(2) to (O)(4), (P)(5), (P)(6), (Q)(2), (R),

(S)(4), (T), (U)(3), (V)(3), (W), (Y)(3), and (Y)(4) of rule 3745-17-12 of the Administrative Code, by June 14, 1991; and for paragraphs (I)(2) and (I)(9) of rule 3745-17-12 of the Administrative Code, by December 6, 1991; and for paragraph (P)(3) of rule 3745-17-12 of the Administrative Code, by November 15, 1995.

(b) For paragraphs (C)(1), (E), (F)(1), (F)(2), (I)(1), (K), (M)(1), (M)(2), (U)(1), (U)(2), (V)(1), (V)(2), (X)(1), (Y)(1), (Y)(2), and (Z) of rule 3745-17-12 of the Administrative Code, by August 1, 1992.

(c) For paragraphs (C)(2) and (X)(4) of rule 3745-17-12 of the Administrative Code, by January 1, 1993.

(d) For paragraphs (C)(3)(a), (C)(3)(b), (C)(3)(c)(ii), (D), (F)(4), (F)(5), (H), (L), (Q)(1), (S)(1) to (S)(3), (V)(4), (X)(2), and (X)(3) of rule 3745-17-12 of the Administrative Code, by December 10, 1993.

(e) For paragraphs (I)(8), (I)(30) and (I)(47)(c) to (I)(47)(e) of rule 3745-17-12 of the Administrative Code, by December 31, 1991.

(f) For paragraphs (I)(1), (I)(16), (I)(28), (I)(30), (I)(38)(b), (I)(39)(b), (I)(45), (I)(47)(a), (J), (O)(1), (O)(5) to (O)(11), (P)(1), (P)(2), (P)(4), and (P)(7) to (P)(13) of rule 3745-17-12 of the Administrative Code, by January 31, 1998.

(g) For paragraphs (I)(5) to (I)(7), (I)(10), (I)(21), (I)(40), (I)(43), and (I)(48) of rule 3745-17-12 of the Administrative Code, by the effective date of this rule.

(7) Any owner or operator of an air contaminant source, which is subject to the requirements of rule 3745-17-13 of the Administrative Code, shall achieve compliance with said requirements as expeditiously as practicable, but not later than the deadlines established in the following schedules:

(a) For paragraph (D)(3) of rule 3745-17-13 of the Administrative Code, by December 6, 1991.

(b) For paragraph (B) of rule 3745-17-13 of the Administrative Code, by November 1, 1992.

(c) For paragraphs (D)(2), (D)(4)(a), (D)(4)(d), (D)(4)(e), (D)(5) and (D)(6) of rule 3745-17-13 of the Administrative Code, by not later than the effective date of this rule.

(d) For paragraphs (D)(4)(a) to (D)(4)(c) of rule 3745-17-13 of the Administrative Code, by December 31, 1993.

(e) For paragraphs (C) and (D)(1) of rule 3745-17-13 of the Administrative Code, by January 31, 1998.

(8) Any owner or operator of a facility, which is subject to the requirements of paragraph (C)(1) of rule 3745-17-03 of the Administrative Code, shall achieve compliance with said requirements by January 31, 1998.

Effective: 02/01/2008

R.C. 119.032 review dates: 09/12/2007 and 02/01/2013

CERTIFIED ELECTRONICALLY
Certification

01/22/2008
Date

Promulgated Under: 119.03
Statutory Authority: 3704.03(E)
Rule Amplifies: 3704.03(A), 3704.03(E)
Prior Effective Dates: 7/28/1975, 9/25/1978, 6/18/1980, 8/1/1982, 10/1/1983, 6/14/1991, 12/6/1991, 11/15/1995, 1/31/1998, 4/14/2003

3745-17-05 (Rescinded as of February 1, 2008)

3745-17-06 (Reserved)

3745-17-07 **Control of visible particulate emissions from stationary sources.**

[Comment: For dates of non-regulatory government publications, publications of recognized organizations and associations, federal rules, and federal statutory provisions referenced in this rule, see the last paragraph of rule 3745-17-01 of the Administrative Code titled "Incorporation by reference."]

(A) Visible particulate emission limitations for stack emissions:

(1) General limitations:

(a) Except as otherwise specified in paragraphs (A)(1)(b), (A)(2) and (A)(3) of this rule, visible particulate emissions from any stack shall not exceed twenty per cent opacity, as a six-minute average.

(b) Except as otherwise specified in paragraphs (A)(2) and (A)(3) of this rule, visible particulate emissions from any stack may exceed twenty per cent opacity, as a six-minute average, for not more than six consecutive minutes in any sixty minutes, but shall not exceed sixty per cent opacity, as a six-minute average, at any time.

(2) It shall be deemed not to be a violation of this rule where the presence of uncombined water is the only reason for failure of a stack emission to meet the requirements of this rule.

(3) The visible particulate emission limitations established in paragraph (A)(1) of this rule shall not apply to the following:

(a) The start-up of the following fuel burning equipment:

(i) For any fuel burning equipment which are equipped with baghouses or electrostatic precipitators, until the exhaust gases have achieved a temperature of two hundred fifty degrees Fahrenheit at the inlet of the baghouses or electrostatic precipitators, provided that the director may incorporate a higher start-up temperature in the permit or variance for such source for which an applicant demonstrates to the satisfaction of the director that the higher temperature is needed for safety considerations or to prevent damage to the control equipment.

(ii) For any fuel burning equipment which are uncontrolled or which are equipped solely with mechanical collectors (including mechanical collectors which are equipped with sidestream separators or similar devices) for the control of particulate emissions, for a period of not more than three hours from the moment of start-up, provided that the director may incorporate a longer start-up time period in the permit or

variance for such source for which an applicant demonstrates to the satisfaction of the director that the longer time period is required.

(b) The shutdown of the following fuel burning equipment:

(i) For any fuel burning equipment which are equipped with baghouses or electrostatic precipitators, after the temperature of the exhaust gases has dropped below two hundred fifty degrees Fahrenheit at the inlet of the baghouses or electrostatic precipitators, provided that the director may incorporate a higher shutdown temperature in the permit or variance for such source for which an applicant demonstrates to the satisfaction of the director that the higher temperature is needed for safety considerations or to prevent damage to the control equipment.

(ii) For any fuel burning equipment which are uncontrolled or which are equipped solely with mechanical collectors (including mechanical collectors which are equipped with sidestream separators or similar devices) for the control of particulate emissions, for a period of not more than three hours, provided that the director may incorporate a longer shutdown time period in the permit or variance for such source for which an applicant demonstrates to the satisfaction of the director that the longer time period is required.

(c) The malfunction of any air contaminant source or the malfunction/shutdown of air pollution control equipment associated with any air contaminant source, if the owner or operator of said air contaminant source or air pollution control equipment complies with the requirements of rule 3745-15-06 of the Administrative Code and none of the conditions listed in paragraph (C) of rule 3745-15-06 of the Administrative Code exists.

(d) Intermittent soot-blowing operations (the cleaning of heat transfer surfaces with pressurized air or steam) for fuel burning equipment which are uncontrolled or which are equipped solely with mechanical collectors (including mechanical collectors which are equipped with sidestream separators or similar devices) for the control of particulate emissions, provided that the owner or operator of such fuel burning equipment maintains a daily record which clearly documents the date, beginning time and ending time for all intermittent soot-blowing operations.

(e) Salt glazing operations conducted in a gas-fired periodic brick or tile kiln, for a period of not more than two hours during any twenty-one consecutive days of operation of said kiln.

(f) Intermittent ash removal operations (the dumping or pulling of ash) for fuel burning equipment which are uncontrolled or which are equipped solely with mechanical collectors (including mechanical collectors which are

equipped with sidestream separators or similar devices) for the control of particulate emissions, provided that the owner or operator of such fuel burning equipment maintains a daily record which clearly documents the date, beginning time and ending time for all intermittent ash removal operations.

(g) The commencement of increased coal firing from a banked condition for fuel burning equipment, for a period not to exceed thirty minutes.

(h) Any air contaminant source which is not subject to any mass emission limitation in paragraphs (B)(3) and (B)(4) of rule 3745-17-08 of the Administrative Code, or rule 3745-17-09, 3745-17-10 or 3745-17-11 of the Administrative Code.

(i) Any air contaminant source for which an equivalent visible particulate emission limitation has been established by the director pursuant to paragraph (C) of this rule.

(j) The following kiln operations at the facility (OEPA premise number 0372000127) located at 755 Lime Road, Woodville, Ohio, provided that "Martin Marietta Magnesia Specialties, Inc.," or any subsequent owner or operator of such facility, maintains daily records that clearly document the dates, beginning times, and ending times for the operations:

(i) The start-up of any kiln equipped with a baghouse, until the time stone feed to the kiln begins.

(ii) The start-up of any kiln equipped with an electrostatic precipitator, from the time the stone feed to the kiln begins until the time a stable firing condition for the solid fuel is achieved, but not longer than six hours from the time firing with the solid fuel begins.

(iii) The shutdown of any kiln equipped with a baghouse, after the time the temperature of the exhaust gases from the kiln has dropped below two hundred fifty degrees Fahrenheit at the inlet of the baghouse.

For the purposes of this paragraph, "start-up" shall be defined as the point of commencement of firing the kiln until such time as the process is operating in a steady-state condition using its primary fuel. A steady-state condition is present when the throughputs of process material, fuel and combustion air have been stabilized in a manner that demonstrates the combustion process will be consistently complete and safe, with an exhausted combustibles concentration within established safety limits.

(B) Visible particulate emission limitations for fugitive dust:

(1) Except as provided in paragraphs (B)(2) to (B)(11) of this rule, visible particulate emissions from any fugitive dust source shall not exceed twenty per cent opacity as a three-minute average.

(2) Except as provided in paragraph (B)(11) of this rule, visible particulate emissions from the fugitive dust sources associated with a coke oven battery shall comply with the following:

(a) There shall be no visible particulate emissions from any charging operations except for a period of time not to exceed one hundred twenty-five seconds during any five consecutive charges. One charge, which represents the charge with the highest visible particulate emissions value of twenty consecutive charges observed, may be exempted from this visible particulate emission limitation.

(b) At no time shall there be visible particulate emissions from more than ten per cent of the offtake piping.

(c) At no time shall there be visible particulate emissions from more than five per cent of the charging hole lids.

(d) For visible particulate emissions from oven doors:

(i) For the Still coke oven battery (OEPA source number B919) at the "Armco Steel Company, L.P., Middletown Works" (OEPA premise number 1409010006), located on Crawford street, Middletown, Ohio, at no time shall there be visible particulate emissions from more than sixteen per cent of the oven doors.

(ii) For all other coke oven batteries, at no time shall there be visible particulate emissions from more than ten per cent of the oven doors. Two oven doors, which represent the last oven charged prior to the commencement of visible particulate emission readings performed in accordance with paragraph (B)(2)(c) of rule 3745-17-03 of the Administrative Code, shall be exempted from this visible emission limitation.

(iii) For purposes of this paragraph, an oven door and the associated chuck door on the pusher side of the battery shall be considered as one door.

(e) Visible particulate emissions during any pushing operations shall not exceed an average of twenty per cent opacity read above the battery top. For purposes of this paragraph, the duration of a pushing operation shall commence with the moving (or pushing) of the coke mass from an oven and shall conclude when the quench car enters the quench tower.

(3) Except as provided in paragraph (B)(11) of this rule, visible particulate emissions of fugitive dust from electric arc furnace shop roof monitors, argon-oxygen decarburization shop roof monitors, blast furnace casthouses and sintering operations shall not exceed twenty per cent opacity as a six-minute average.

(4) Except as provided in paragraphs (B)(7), (B)(8), and (B)(11) of this rule, there shall be no visible particulate emissions from any paved roadway or parking area except for a period of time not to exceed six minutes during any sixty-minute observation period, as determined in accordance with paragraph (B)(4) of rule 3745-17-03 of the Administrative Code.

(5) Except as provided in paragraphs (B)(7), (B)(8), and (B)(11) of this rule, there shall be no visible particulate emissions from any unpaved roadway or parking area except for a period of time not to exceed thirteen minutes during any sixty-minute observation period, as determined in accordance with paragraph (B)(4) of rule 3745-17-03 of the Administrative Code.

(6) Except as provided in paragraphs (B)(7) to (B)(11) of this rule, there shall be no visible particulate emissions from any material storage pile except for a period of time not to exceed thirteen minutes during any sixty-minute observation period, as determined in accordance with paragraph (B)(4) of rule 3745-17-03 of the Administrative Code.

(7) Except as provided in paragraph (B)(11) of this rule, visible particulate emissions from any roadway, parking area, material handling operation, or coal storage pile located at facilities owned or operated by "Buckeye Power, Inc., Cincinnati Gas & Electric Company, The Cleveland Electric Illuminating Company, Columbus Southern Power Company, Dayton Power & Light Company, Ohio Edison Company, Ohio Power Company, and The Toledo Edison Company" or any subsequent owners or operators of such facilities shall not exceed any of the following limitations:

(a) For any paved or unpaved roadway or parking area:

(i) Ten per cent opacity, as determined in Accordance with paragraph (B)(3) of rule 3745-17-03 of the Administrative Code, for the following facilities:

[reserved]

(ii) No visible particulate emissions from any paved roadway or parking area, except for a period of time not to exceed six minutes during any sixty-minute observation period, or from any unpaved roadway or parking area, except for a period of time not to exceed thirteen minutes during any sixty-minute observation period, as determined in accordance with paragraph (B)(4) of rule 3745-17-03 of the

Administrative Code, for all other facilities not identified in paragraph (B)(7)(a)(i) of this rule.

(b) Twenty per cent opacity for any material handling operation (including loading coal into or loading coal out of any coal storage pile), as determined in accordance with paragraph (B)(3) of rule 3745-17-03 of the Administrative Code;

(c) Twenty per cent opacity from the operation of vehicles on top of any coal storage pile (emissions from the combustion of fuels in such vehicles are not subject to this limitation), as determined in accordance with paragraph (B)(3) of rule 3745-17-03 of the Administrative Code; and

(d) No visible particulate emissions from any coal storage pile due to wind erosion, except for a period of time not to exceed thirteen minutes during any sixty-minute observation period, as determined in accordance with paragraph (B)(4) of rule 3745-17-03 of the Administrative Code.

(8) Except as provided in paragraph (B)(11) of this rule, visible particulate emissions from any roadway, parking area, or material storage pile located at iron and steel production facilities owned and operated by "Empire Detroit Steel Company, LTV Steel Company, Republic Engineered Steels, Incorporated, The Timken Company, or USS/KOBE Steel Company" or any subsequent owner or operator of such facilities shall not exceed any of the following limitations:

(a) Ten per cent opacity for any paved or unpaved roadway or parking area, as determined in accordance with paragraph (B)(3) of rule 3745-17-03 of the Administrative Code;

(b) Twenty per cent opacity for any material handling operation (including loading coal into or loading coal out of any coal storage pile), as determined in accordance with paragraph (B)(3) of rule 3745-17-03 of the Administrative Code;

(c) Ten per cent opacity from the operation of vehicles on top of any material storage pile, where such vehicles are employed for the purpose of compacting, grading or transporting materials (emissions from the combustion of fuels in such vehicles are not subject to this limitation), as determined in accordance with paragraph (B)(3) of rule 3745-17-03 of the Administrative Code; and

(d) Ten per cent opacity from wind erosion of any material storage pile, as determined in accordance with paragraph (B)(3) of rule 3745-17-03 of the Administrative Code.

(9) Within thirty days after the effective date of this rule, the "Ford Motor Company, Cleveland Casting Plant" (OEPA premise number 1318120180) or any subsequent owner or operator of the "Ford Motor Company, Cleveland Casting Plant" located at 5600 Henry Ford Boulevard, Brook Park, Ohio shall submit a written notification to the director which indicates whether, for the control of fugitive dust generated from any material storage pile located at such facility, it will comply with either the visible particulate emission limitation in paragraph (B)(6), or the visible particulate emission limitation in paragraph (B)(6) except that fugitive dust emissions from loading material into or out of any material storage pile shall not exceed a visible particulate emission limitation of twenty per cent opacity, as determined in accordance with paragraph (B)(3) of rule 3745-17-03 of the Administrative Code. In such notification, "Ford Motor Company, Cleveland Casting Plant" or any subsequent owner or operator of such facility shall choose between the visible particulate emission limitations. Except as otherwise provided in paragraph (B)(10) of this rule, after submitting such written notification indicating which visible particulate emission limitation it will comply with, "Ford Motor Company, Cleveland Casting Plant" or any subsequent owner or operator of such facility will be subject to and shall comply with such visible particulate emission limitation(s).

(10) After selecting a visible particulate emission limitation(s) option pursuant to paragraph (B)(9) of this rule, in the event that "Ford Motor Company, Cleveland Casting Plant" or any subsequent owner or operator of the "Ford Motor Company, Cleveland Casting Plant" subsequently desires to be subject to and to comply with the other identified visible particulate emission limitation(s) option identified in paragraph (B)(9) of this rule, "Ford Motor Company, Cleveland Casting Plant" or any subsequent owner or operator of such facility may so notify the director by submitting a written notification which clearly indicates that "Ford Motor Company, Cleveland Casting Plant" or any subsequent owner or operator of such facility desires to be subject to and shall comply with the alternative visible particulate emission limitation(s) option. To be effective, any such written notification shall expressly identify the specific date on which "Ford Motor Company, Cleveland Casting Plant" or any subsequent owner or operator of such facility desires to be subject to the alternative option and shall be submitted no later than thirty days prior to such date. In the event that "Ford Motor Company, Cleveland Casting Plant" or any subsequent owner or operator of such facility complies with the written notification provisions contained in this paragraph, "Ford Motor Company, Cleveland Casting Plant" or any subsequent owner or operator of such facility shall become subject to and shall comply with the alternative visible particulate emission limitation(s) option as of the date specifically identified in the written notification.

(11) The visible particulate emission limitations specified in paragraphs (B)(1) to (B)(9) of this rule shall not apply to the following:

(a) Ship loading spouts at grain terminals;

(b) Blasting at mineral extraction operations;

(c) Blowing taps, poling and oxygen lancing of the tap hole and casting operations associated with ferroalloy electric arc furnaces;

(d) Any fugitive dust source which is exempted from the requirements of paragraph (B) of rule 3745-17-08 of the Administrative Code;

(e) Any fugitive dust source which is not located within the geographical areas specified in appendix A of rule 3745-17-08 of the Administrative Code, unless the director, in accordance with paragraph (A)(2) of rule 3745-17-08 of the Administrative Code, requires the owner or operator to submit and implement a control program which will bring the fugitive dust source into compliance with the requirements of paragraph (B) of rule 3745-17-08 of the Administrative Code; and

(f) The malfunction of any air contaminant source or the malfunction/shutdown of air pollution control equipment associated with any air contaminant source, if the owner or operator of said air contaminant source or air pollution control equipment complies with the requirements of rule 3745-15-06 of the Administrative Code and none of the conditions listed in paragraph (C) of rule 3745-15-06 of the Administrative Code exists.

(g) Any fugitive dust for which a visible particulate emission limitation has been established in rule 3745-17-12 or 3745-17-13 of the Administrative Code.

(12) It shall be deemed not to be a violation of this rule where the presence of uncombined water is the only reason for failure of a fugitive dust emission to meet the requirements of this rule.

(C) Equivalent visible particulate emission limitations:

(1) For the purpose of establishing an equivalent visible particulate emission limitation for stack emissions subject to a mass-based, particulate emission limitation, any owner or operator of an air contaminant source which is subject to the requirements of paragraph (A)(1) of this rule may request the director to determine the average opacity of the emissions from said source during any performance test(s) conducted pursuant to paragraph (B) of rule 3745-17-03 of the Administrative Code. Any such request shall be made in writing at the time the test specifications and procedures are submitted to the director pursuant to paragraph (B)(6) of rule 3745-17-03 of the Administrative Code.

(2) If, upon review of such owner's or operator's written report of the results of the performance test(s), it is the director's judgment that the air contaminant source is in compliance with all applicable emission limitations for which the

performance tests were conducted, but fails to comply with the requirements of paragraph (A)(1) of this rule, the director shall notify the owner or operator as expeditiously as practicable that he may request the director to establish an equivalent visible particulate emission limitation for the source. Such request shall be made in writing within thirty days following receipt of the notification from the director.

(3) Any written request for an equivalent visible particulate emission limitation from an owner or operator of an air contaminant source shall include information which demonstrates the following:

(a) That the performance tests were conducted in accordance with the conditions and procedures accepted by the director pursuant to paragraph (B)(6) of rule 3745-17-03 of the Administrative Code; and

(b) That the air contaminant source and any associated air pollution control equipment were operated and maintained in a manner so as to minimize the opacity of the emissions during the performance test(s).

(4) If an owner or operator of an air contaminant source complies with the requirements of paragraphs (C)(1) to (C)(3) of this rule, the director may establish an equivalent visible particulate emission limitation for said source in accordance with the procedures described in the Ohio EPA, Division of Air Pollution Control documents entitled "Engineering Guide #13" and "Engineering Guide #15." Any such equivalent visible particulate emission limitation shall be specified in the terms and conditions of the permit, variance or order issued by the director for said source.

(D) Any revision approved by the director in accordance with paragraphs (A)(3)(a)(i), (A)(3)(a)(ii), (A)(3)(b)(i), and (A)(3)(b)(ii) of this rule shall not revise the federally enforceable requirements of the state implementation plan until approved by the United States environmental protection agency.

Effective: 02/01/2008

R.C. 119.032 review dates: 09/12/2007 and 02/01/2013

CERTIFIED ELECTRONICALLY
Certification

01/22/2008
Date

Promulgated Under: 119.03
Statutory Authority: 3704.03(E)
Rule Amplifies: 3704.03(A), 3704.03(E)
Prior Effective Dates: 2/15/1972, 6/18/1980, 10/1/1983, 6/14/1991, 1/31/1998, 4/14/2003

3745-17-08 **Restriction of emission of fugitive dust.**

[Comment: For dates of non-regulatory government publications, publications of recognized organizations and associations, federal rules, and federal statutory provisions referenced in this rule, see the last paragraph of rule 3745-17-01 of the Administrative Code titled "Incorporation by reference."]

(A) Applicability:

(1) Except as otherwise indicated in paragraph (A)(3) of this rule, the requirements of paragraph (B) of this rule shall apply to any fugitive dust source which is located within the areas identified in appendix A to this rule. Except as additional time for achieving compliance is provided in paragraph (B) of rule 3745-17-04 of the Administrative Code, any such source shall comply with the requirements of paragraph (B) of this rule upon the effective date of this rule.

(2) Notwithstanding the exemptions in paragraph (A)(3) of this rule, the requirements of paragraph (B) of this rule shall apply to any fugitive dust source regardless of location if, in the director's judgment, probable cause exists to believe that such source is causing or contributing to a violation of rule 3745-15-07 or 3745-17-02 of the Administrative Code. In such cases, the director may require the owner or operator of the fugitive dust source to apply for and obtain a permit to operate for the source in accordance with rule 3745-35-02 of the Administrative Code, and/or require the owner or operator to submit and implement a control program which will bring the fugitive dust source into compliance with the requirements of paragraph (B) of this rule as expeditiously as practicable.

(3) The requirements of paragraph (B) of this rule shall not apply to:

(a) Any fugitive dust source which is located at a grain elevator having a permanent storage capacity of less than 2.5 million bushels;

(b) Reserved

(c) Fugitive dust generated from publicly owned roadways and parking lots, provided the fugitive dust is not directly caused by the deposition of materials due to industrial, commercial, or construction activities; and

(d) Fugitive dust generated from the tilling and wind erosion of farm land.

(e) Except as otherwise provided in paragraphs (E) and (F) of this rule, fugitive dust generated from any roadway or parking area at the "Ford Motor Company, Cleveland Casting Plant" or any subsequent owner or operator of the "Ford Motor Company, Cleveland Casting Plant" facility located at

5600 Henry Ford Boulevard, Brook Park, Ohio (OEPA premise number 1318120180) and at the "Wheeling Pittsburgh Steel Corporation" or any subsequent owner or operator of the "Wheeling Pittsburgh Steel Corporation" facilities located at South Third Street, Steubenville, Ohio (OEPA premise number 1741150011) and at McLister avenue, Mingo Junction, Ohio (OEPA premise number 1741090010).

(4) An air contaminant source can be subject to both of the requirements of rule 3745-17-11 of the Administrative Code and this rule if it is a fugitive dust source, as defined in paragraph (B)(7) of 3745-17-01 of the Administrative Code, and also emits, by means of one or more stacks, particulate matter that is subject to a limitation(s) in rule 3745-17-11 of the Administrative Code.

(B) No person shall cause or permit any fugitive dust source to be operated; or any materials to be handled, transported, or stored; or a building or its appurtenances or a road to be used, constructed, altered, repaired, or demolished without taking or installing reasonably available control measures to prevent fugitive dust from becoming airborne. Such reasonably available control measures shall include, but not be limited to, one or more of the following which are appropriate to minimize or eliminate visible particulate emissions of fugitive dust:

(1) The use of water or other suitable dust suppression chemicals for the control of fugitive dust from the demolition of existing buildings or structures, construction operations, the grading of roads or the clearing of land;

(2) The periodic application of asphalt, oil (excluding any used oil as defined in paragraph (A)(12) of rule 3745-279-01 of the Administrative Code), water, or other suitable dust suppression chemicals on dirt or gravel roads and parking lots, and other surfaces which can cause emissions of fugitive dust;

(3) The installation and use of hoods, fans, and other equipment to adequately enclose, contain, capture, vent and control the fugitive dust. Such equipment shall meet the following requirements:

(a) The collection efficiency is sufficient to minimize or eliminate visible particulate emissions of fugitive dust at the point(s) of capture to the extent possible with good engineering design; and

(b) The control equipment achieves an outlet emission rate of not greater than 0.030 grain of particulate emissions per dry standard cubic foot of exhaust gases or there are no visible particulate emissions from the exhaust stack(s), whichever is less stringent;

(4) For ship loading operations at grain terminals:

(a) Except during topping-off periods or during the loading of tween-deckers or tankers, the covering of the hatches and loading spouts with tarpaulin covers, to the extent practicable, and evacuation of the hatches to control equipment which is designed to achieve an outlet emission rate of 0.030 grain of particulate emissions per dry standard cubic foot of exhaust gases; or

(b) The installation and use of control measures such as deadbox or bullet-type loading spouts which are equivalent to or better than the overall control efficiency of the measures described in paragraph (B)(4)(a) of this rule;

(5) The use of adequate containment methods during sandblasting or other similar operations;

(6) The periodic application of water or other suitable dust suppression chemicals, the installation of storage silos, bins or other enclosed structures, or the use of canvas or other suitable coverings, for all materials stockpiles and stockpiling operations, except temporary stockpiles and stockpiling operations for grain and grain products;

(7) The covering, at all times, of open bodied vehicles when transporting materials likely to become airborne;

(8) The paving of roadways and the maintaining of roadways in a clean condition; and

(9) The prompt removal, in such a manner as to minimize or prevent resuspension, of earth or other material from paved streets onto which earth or other material has been deposited by trucking or earth moving equipment or erosion by water or other means.

(C) For purposes of determining compliance with the requirements of paragraph (B) of this rule, the director shall consider a control measure to be adequate if it complies with the following:

(1) The visible particulate emission limitation(s) contained in rule 3745-17-07 of the Administrative Code;

(2) If applicable, the control requirements contained in paragraph (B) of this rule; and

(3) The definition of reasonably available control measures in paragraph (B)(17) of rule 3745-17-01 of the Administrative Code.

(D) Any owner or operator of a facility which contains a fugitive dust source and which is located within any area identified in appendix A to this rule shall submit a

certification and/or application for a permit-to-operate in accordance with paragraphs (A) and (B) of rule 3745-17-04 of the Administrative Code. This paragraph shall not exempt the owner or operator of a fugitive dust source which is not located within an area identified in appendix A to this rule from the requirements of rule 3745-35-02 or 3745-77-02 of the Administrative Code.

(E) Within thirty days after January 31, 1998, the "Ford Motor Company, Cleveland Casting Plant" (OEPA premise number 1318120180) or any subsequent owner or operator of the "Ford Motor Company, Cleveland Casting Plant" located at 5600 Henry Ford Boulevard, Brook Park, Ohio shall submit a written notification to the director which indicates whether it will comply with either the work practice plan in appendix B to this rule or the visible particulate emission limitation in paragraph (B)(5) of rule 3745-17-07 of the Administrative Code and the requirements of paragraph (B)(2) of this rule for the control of fugitive dust generated from any unpaved roadway or parking area located at such facility. In such notification, "Ford Motor Company, Cleveland Casting Plant" or any subsequent owner or operator of such facility shall choose between the requirements of the work practice plan or the requirements of paragraph (B)(5) of rule 3745-17-07 of the Administrative Code and of paragraph (B)(2) of this rule. Except as otherwise provided in paragraph (F) of this rule, after submitting such written notification indicating which control requirements it will comply with, "Ford Motor Company, Cleveland Casting Plant" or any subsequent owner or operator of such facility will be subject to and shall comply with such control requirements.

(F) After selecting a control requirements option pursuant to paragraph (E) of this rule, in the event that "Ford Motor Company, Cleveland Casting Plant" or any subsequent owner or operator of the "Ford Motor Company, Cleveland Casting Plant" subsequently desires to be subject to and to comply with the other identified control requirements option identified in paragraph (E) of this rule, "Ford Motor Company, Cleveland Casting Plant" or any subsequent owner or operator of such facility may so notify the director by submitting a written notification which clearly indicates that "Ford Motor Company, Cleveland Casting Plant" or any subsequent owner or operator of such facility desires to be subject to and shall comply with the alternative control requirements option. To be effective, any such written notification shall expressly identify the specific date on which "Ford Motor Company, Cleveland Casting Plant" or any subsequent owner or operator of such facility desires to be subject to the alternative control requirements option and shall be submitted no later than thirty days prior to such date. In the event that "Ford Motor Company, Cleveland Casting Plant" or any subsequent owner or operator of such facility complies with the written notification provisions contained in this paragraph, "Ford Motor Company, Cleveland Casting Plant" or any subsequent owner or operator of such facility shall become subject to and shall comply with the alternative control requirements option as of the date specifically identified in the written notification.

Effective: 02/01/2008

R.C. 119.032 review dates: 09/12/2007 and 02/01/2013

CERTIFIED ELECTRONICALLY
Certification

01/22/2008
Date

Promulgated Under: 119.03
Statutory Authority: 3704.03(E)
Rule Amplifies: 3704.03(A), 3704.03(E)
Prior Effective Dates: 8/7/1972, 6/18/1980, 3/25/1981, 8/1/1982, 10/1/1983, 6/14/1991, 1/31/1998, 4/14/2003

3745-17-08 Appendix A

AREAS OF THE STATE OF OHIO
WHERE PARAGRAPHS (B) AND (D) OF RULE 3745-17-08
OF THE ADMINISTRATIVE CODE ARE APPLICABLE

COUNTY	DESCRIPTION OF AREA(S)
Allen	City of Lima
Ashtabula	City of Ashtabula; and Ashtabula and Plymouth Townships
Belmont	entire county
Butler	Cities of Hamilton, Middletown and New Miami; and Fairfield, Lemon, Madison and St. Clair Townships
Carroll	entire county
Clark	Cities of New Carlisle and Springfield
Clinton	Cities of Blanchester and Wilmington
Columbiana	entire county
Coshocton	Jackson Township
Cuyahoga	entire county
Defiance	Richland Township
Franklin	City of Columbus
Gallia	City of Gallipolis
Geauga	Cities of Chardon and Middlefield; and Bainbridge Township
Greene	City of Fairborn
Hamilton	Cities of Cincinnati, Norwood, Golf Manor, Amberley, Arlington Heights, Reading, Lockland, Evendale, Sharonville, Springdale, Glendale, Woodlawn, Lincoln Heights, Wyoming, Elmwood Place and St. Bernard; and Miami, Whitewater, Delhi and Springfield Townships
Henry	City of Napoleon
Jackson	City of Jackson
Jefferson	entire county
Lake	Cities of Painesville, Willowick, Willoughby Hills, Wickliffe, Eastlake, Madison and Mentor; and Madison, Leroy and Painesville Townships
Lawrence	Cities of Ironton and Coal Grove
Lorain	Cities of Sheffield, Lorain, Avon and Avon Lake; and Sheffield Township
Lucas	Cities of Maumee, Toledo and Oregon; and Washington and Waterville Townships

COUNTY	DESCRIPTION OF AREA(S)
Mahoning	City of Youngstown
Medina	entire county
Meigs	City of Racine
Miami	City of Piqua; and Concord Township
Monroe	entire county
Montgomery	Cities of Dayton, Kettering, Miamisburg, Moraine, Oakwood, Riverside, Trotwood and West Carrollton; and Butler, Jefferson, Harrison, Mad River, Madison, Miami, Washington and Wayne Townships
Morgan	Center Township
Muskingum	Cities of Philo and Zanesville
Noble	City of Caldwell
Portage	Cities of Kent and Ravenna
Preble	City of Eaton
Richland	City of Mansfield; and Madison, Mifflin and Franklin Townships
Sandusky	Cities of Gibsonburg and Woodville; and Jackson, Madison, Washington and Woodville Townships
Seneca	City of Tiffin
Shelby	City of Sidney
Stark	Cities of Canton, East Canton, Louisville and Meyers Lake; and Canton, Nimishillen, Osnaburg, Perry and Plain Townships
Summit	Cities of Akron, Barberton, Cuyahoga Falls and Norton; and Coventry and Franklin Townships
Trumbull	Cities of Warren and Niles; and Warren Township
Washington	entire county
Wood	City of Perrysburg
Wyandot	City of Carey; and Crawford Township

3745-17-08 Appendix B

WORK PRACTICE PLAN FOR THE CONTROL OF FUGITIVE DUST EMISSIONS FROM UNPAVED ROADWAYS AT THE FORD MOTOR COMPANY CLEVELAND CASTING PLANT

A. Dust control program for unpaved roadways:

1. The facility shall employ the following dust control measures on all of the unpaved roadways identified in Figure I of this Appendix such that the program achieves and maintains a minimum of 75 percent control efficiency, as determined by the methodology set forth in the U.S. Environmental Protection Agency's reference document entitled Control of Open Fugitive Dust Sources (EPA-450/3-88-008), Section 3.0, "Unpaved Roads":

   a. All unpaved roadways shall be treated with a dust suppressant solution, consisting of either a petroleum resin emulsion, asphalt emulsion or acrylic cement in water, and applied at a coverage dilution with water at a ratio of not more than 10 parts of water to one part of concentrate. Such treatments shall be performed in accordance with the following schedule and on a year-round basis, except as otherwise provided in Section A.1.b of this Appendix:

segments	minimum application frequency
UR1	every four and one-half weeks
UR2, UR3	every six and one-half weeks

   b. The requirements of Section A.1.a of this Appendix may be suspended during any one of the following events:

      i. when the unpaved roadways are visibly wetted as a result of a precipitation of equal to or greater than one quarter inch of rainfall as measured by an on-site rain gauge or rainfall data provided by the National Weather Service at Cleveland Hopkins Airport; or

      ii. when the unpaved roadways are covered with snow and/or ice.

      Resumption of the treatment requirements of Section A.1.a of this Appendix shall occur within five (5) days after cessation of the above event(s).

2. Any dust suppressant spray truck used for treating unpaved roadways pursuant to Section A.1.a shall be operated and maintained in order to apply dust suppressant solution at a coverage rate of at least 0.25 gallon per square yard at the specified frequency.
3. The facility shall maintain records and submit reports concerning the dust control program in accordance with the following:
   a. The following information shall be recorded on a daily basis:
      i. for periods during which the treatment requirements of Section A.1.a of this Appendix have been suspended pursuant to the provisions of Section A.1.b of this Appendix:
         a. the date(s) of suspension;
         b. the specific treatment operations suspended;
         c. the daily precipitation in inches of water and/or the presence of snow and/or ice cover, whichever is/are applicable;
      ii. the date each unpaved roadway was treated;
      iii. an identification of each unpaved roadway or portion thereof which was treated;
      iv. an identification of the dust suppressant spray vehicle employed for the treatment;
      v. the name of the operator who performed the treatment;
      vi. the type of chemical dust suppressant applied to each unpaved roadway;
      vii. the dilution ratio (gallons of chemical dust suppressant to gallons of water); and
      viii. the amount of dust suppressant solution applied to each unpaved roadway (gallons per square yard).
   b. The records collected pursuant to Section A.3.a of this Appendix shall be retained by the facility for a period of not less than three years and shall be made available to the Director or his representative upon request.
   c. The facility shall submit to the Director or his representative, within five (5) days of any non-compliance with the requirements of Section (A) of this Appendix, a report which includes a detailed explanation of the cause of such noncompliance, all remedial actions required, and the date by which compliance was or will be reestablished.

B. Change to dust control programs in Section A of this Appendix:
   1. The facility may petition the Ohio EPA for written approval of treatment methods, treatment schedules and procedures or reporting requirements different from those required herein. Such alternative practices must be demonstrated to the Ohio EPA and the U.S. Environmental Protection Agency to result in equivalent dust control effectiveness in accordance with the document entitled Control of Open Fugitive Dust Sources (EPA-

450/3-88-008). The facility reserves the right to contest any disapproval of such petition in the appropriate judicial forum.

2. In the event that the facility certifies that the use of all or a portion of an unpaved roadway identified in Figure I of this Appendix has been discontinued, the dust suppressant solution application program for that roadway may be terminated or reduced. If the facility begins to utilize any new unpaved roadway, parking area, or other vehicular activity area not shown in Figure I of this Appendix, it shall notify the Director in the reports required pursuant to this Appendix and treat the roadway or area in accordance with the procedures contained herein.
3. The Director shall not be precluded from requiring adjustments, including increased chemical suppressant application, if on-site inspections reveal that the program contained herein does not prevent excessive visible dust entrainment and emissions from a particular roadway or surface.
4. In the event that an unpaved roadway that has been chemically treated becomes completely hardened and cemented by such treatment so as to become like a paved road as demonstrated by observation, by compaction tests and silt analyses or in the event that the facility paves any unpaved roadway or area, that roadway or area shall be treated as a paved surface and shall be subject to the requirements of paragraph (I)(1) of rule 3745-17-12 of the Administrative Code.

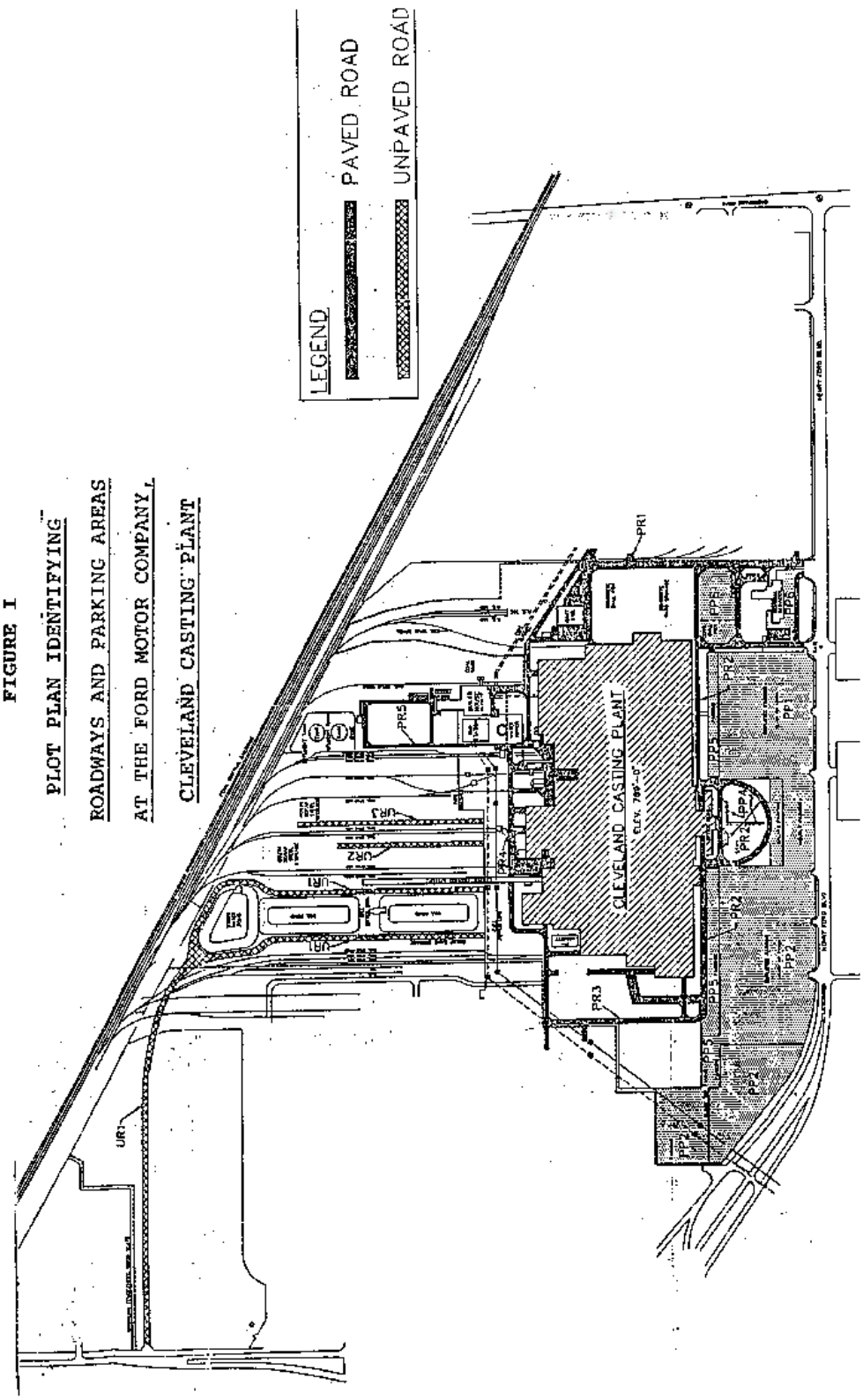

FIGURE I

PLOT PLAN IDENTIFYING

ROADWAYS AND PARKING AREAS

AT THE FORD MOTOR COMPANY,

CLEVELAND CASTING PLANT

3745-17-09 **Restrictions on particulate emissions and odors from incinerators.**

(A) General provisions.

(1) This rule shall apply to any incinerator except those regulated under Chapter 3745-75 of the Administrative Code.

(2) For the purposes of this rule, the total of the capacities of all incinerators which are united either physically or operationally shall be considered as the incineration capacity.

(B) Emission limitation.

No person shall cause, suffer, or allow to be emitted into the ambient air from any incinerators, particulate emissions in the exhaust gases in excess of: 0.10 pound per one hundred pounds of liquid, semi-solid or solid refuse and salvageable material charged, for incinerators having incineration capacities equal to or greater than one hundred pounds per hour; or 0.20 pound per one hundred pounds of liquid, semi-solid or solid refuse and salvageable material charged for incinerators having incineration capacities less than one hundred pounds per hour.

(C) Design-operation requirements.

Incinerators, including all associated equipment and grounds, shall be designed, operated and maintained so as to prevent the emission of objectionable odors.

Effective: 02/01/2008

R.C. 119.032 review dates: 09/12/2007 and 02/01/2013

CERTIFIED ELECTRONICALLY
Certification

01/22/2008
Date

Promulgated Under: 119.03
Statutory Authority: 3704.03(E)
Rule Amplifies: 3704.03(A), 3704.03(E)
Prior Effective Dates: 2/15/1972, 6/18/1980, 10/1/1983, 7/9/1991

3745-17-10 **Restrictions on particulate emissions from fuel burning equipment.**

(A) This rule applies to installations in which fuel, including any product or by-product of a manufacturing process, is burned for the primary purpose of producing heat or power by indirect heat transfer.

(B) For purposes of this rule the actual heat input shall be the aggregate heat content of all fuels whose products of combustion emanate from a single fuel burning unit. The maximum capacity shall be the equipment manufacturer's or designer's guaranteed maximum heat input, whichever is greater. Unless otherwise specified in paragraphs (B)(1) to (B)(4) of this rule, the total heat input of all fuel burning units on a plant or premises which are united either physically or operationally shall be the total of the maximum capacities for all such units. The total heat input shall be used for determining the maximum allowable amount of particulate emissions per million Btu of actual heat input from any single fuel burning unit.

(1) Any new or existing fuel burning equipment which is fired only with gaseous fuels and/or number two fuel oil and which is physically or operationally united with other fuel burning equipment on a plant or premises shall not be included by the director for purposes of determining the total heat input and maximum allowable particulate emissions per million Btu of actual heat input for such other fuel burning equipment. The maximum allowable amount of particulate emissions for any new or existing fuel burning equipment which is fired only with gaseous fuels, excluding blast furnace gas, and/or number two fuel oil shall be 0.020 pound per million Btu of actual heat input. The maximum allowable amount of particulate emissions for any new or existing fuel burning equipment which is fired only with blast furnace gas or any mixture of blast furnace gas with other gaseous fuels and/or number two fuel oil shall be 0.040 pound per million Btu of actual heat input.

(2) Stand-by fuel burning equipment which is physically or operationally united with other fuel burning equipment on a plant or premises shall be exempted by the director for purposes of determining total heat input and maximum allowable particulate emissions per million Btu of actual heat input for such other fuel burning equipment. Except as provided in paragraph (B)(1) of this rule, the total heat input for such other fuel burning equipment shall be used for determining the maximum allowable amount of particulate emissions per million Btu of actual heat input for any stand-by fuel burning equipment.

(3) Derating of fuel burning equipment.

(a) For purposes of this paragraph, fuel burning equipment shall include, where appropriate, all equipment on a plant or premises which are united either physically or operationally.

(b) Upon request, the director may specify the total heat input for fuel burning equipment at a derated value which is less than the total maximum capacity of such equipment if, in the director's judgment, the equipment will not be operated so that the actual heat input exceeds the derated value. Any owner or operator requesting derating of fuel burning equipment shall demonstrate to the director, with such steam charts, records of fuel consumption and fuel quality, and other data as are necessary, that the actual heat input from the equipment will not exceed the derated total heat input value.

(c) The terms and conditions of any permit, variance, or order for equipment which has been granted a derated total heat input value shall prohibit the operation of such equipment at a level in excess of the derated total heat input value. The director may include in any such permit, variance, or order requirements for the monitoring and reporting of the actual heat input of the equipment.

(d) Any derating of fuel burning equipment approved by the director shall not revise the federally enforceable requirements of the state implementation plan until approved by the United States environmental protection agency.

(4) Fuel burning equipment which constitutes a new source and is physically or operationally united with existing fuel burning equipment on a plant or premises shall not be included by the director for purposes of determining total heat input and maximum allowable particulate emissions per million Btu of actual heat input for such existing fuel burning equipment. Except as may be provided in paragraphs (B)(1) and/or (B)(2) of this rule, the total heat input for the new and existing fuel burning equipment shall be used for determining the maximum allowable amount of particulate emissions per million Btu of actual heat input for the new fuel burning equipment.

(C) Emission limitations.

(1) Except as provided in paragraph (B)(1) of this rule (as it pertains to gaseous fuels and number two fuel oil) and paragraphs (C)(3) to (C)(7) of this rule, any owner or operator of fuel burning equipment which is located within the following counties shall operate said equipment so that the particulate emissions do not exceed the allowable emission rate specified by "Curve P-1" of "Figure I" in the appendix to this rule: Adams, Allen, Ashtabula, Athens, Belmont, Brown, Butler, Clark, Clermont, Clinton, Columbiana, Coshocton, Cuyahoga, Darke, Defiance, Delaware, Fairfield, Franklin, Gallia, Geauga, Greene, Hamilton, Henry, Jackson, Jefferson, Lake, Lawrence, Licking, Lorain, Lucas, Madison, Mahoning, Medina, Meigs, Miami, Monroe, Montgomery, Morgan, Muskingum, Noble, Perry, Pickaway, Portage, Preble, Richland, Ross, Sandusky, Scioto, Seneca, Shelby, Stark, Summit, Trumbull, Union, Warren, Washington, Wyandot and Wood.

(2) Except as provided in paragraph (B)(1) of this rule (as it pertains to gaseous fuels and number two fuel oil) and paragraph (C)(7) of this rule, any owner or operator of fuel burning equipment which is located within the following counties shall operate said equipment so that the particulate emissions do not exceed the allowable emission rate specified by "Curve P-2" of "Figure I" in the appendix to this rule: Ashland, Auglaize, Carroll, Champaign, Crawford, Erie, Fayette, Fulton, Guernsey, Hancock, Hardin, Harrison, Highland, Hocking, Holmes, Huron, Knox, Logan, Marion, Mercer, Morrow, Ottawa, Paulding, Pike, Putnam, Tuscarawas, Van Wert, Vinton, Wayne and Williams.

(3) The "Ford Motor Company, Lorain Assembly Plant" (OEPA premise number 1947080234) or any subsequent owner or operator of the "Ford Motor Company, Lorain Assembly Plant Facility, 5401 Baumhart Road, Lorain, Ohio" shall not cause or permit the particulate emissions from boilers number 1 through 3 (OEPA source numbers B001 through B003) to exceed a maximum of 0.20 pounds of particulate emissions per million Btu actual heat input from each boiler.

(4) The "Ford Motor Company, Lima Engine Plant" (OEPA premise number 0302020143) or any subsequent owner or operator of the "Ford Motor Company, Lima Engine Plant Facility, Bible and North Sugar Roads, Lima, Ohio" shall not cause or permit the particulate emissions from boilers number 1 through 3 (OEPA source numbers B001 through B003) to exceed a maximum of 0.24 pounds of particulate emissions per million Btu actual heat input from each boiler.

(5) The emission limitations specified for the "Ford Motor Company" facilities identified in paragraphs (C)(3) and (C)(4) of this rule shall not be construed to preclude the director from establishing alternative emission limitations for such facilities pursuant to paragraphs (B)(1) to (B)(4) of this rule.

(6) The "Columbus and Southern Ohio Electric Company, Conesville Station."

(a) Prior to achieving compliance with the emission limitation specified in paragraph (C)(6)(b) of this rule, the "Columbus and Southern Ohio Electric Company, Conesville Station" (OEPA premise number 0616000000) or any subsequent owner or operator of the "Columbus and Southern Ohio Electric Company, Conesville Station Facility, Rural Free Delivery 1, Conesville, Ohio" shall not cause or permit the particulate emissions from boiler number 4 (OEPA source number B004) to exceed a maximum of 0.43 pound of particulate emissions per million Btu actual heat input.

(b) In accordance with the compliance schedule established in paragraph (C)(4) of rule 3745-17-04 of the Administrative Code, the "Columbus and Southern Ohio Electric Company, Conesville Station" (OEPA) premise number 0616000000) or any subsequent owner or operator of the

"Columbus and Southern Ohio Electric Company, Conesville Station Facility, Rural Free Delivery 1, Conesville, Ohio" shall not cause or permit the particulate emissions from boiler number 4 (OEPA source number B004) to exceed a maximum of 0.10 pound of particulate emissions per million Btu actual heat input.

(7) Alternative emission requirements for small coal-fired fuel burning equipment which is used exclusively for space heating purposes.

(a) Any owner or operator of coal-fired fuel burning equipment, which has an individual maximum capacity of equal to or greater than one million Btu per hour and less than twenty million Btu per hour and which is used exclusively for space heating purposes, may choose to immediately comply with all the following requirements in lieu of the requirements of paragraph (C)(1) or (C)(2) of this rule:

(i) The coal received for use in the fuel burning equipment has an ash content of less than 8.0 per cent by weight and a heat content of greater than thirteen thousand Btu per pound (ash content and heat content shall be determined on a dry basis in accordance with the procedures specified in paragraph (B)(9) of rule 3745-17-03 of the Administrative Code).

(ii) The use of flyash reinjection in the coal-fired fuel burning equipment is prohibited.

(iii) The coal-fired fuel burning equipment employs an overfire air system which is designed, maintained and operated in accordance with good engineering practice and which minimizes visible particulate emissions from the fuel burning equipment.

(iv) Except as otherwise provided in paragraph (A)(3) of rule 3745-17-07 of the Administrative Code, the visible particulate emissions from the coal-fired fuel burning equipment comply with the requirements of paragraph (A)(1) of rule 3745-17-07 of the Administrative Code. No coal-fired fuel burning equipment which is subject to the alternative emission requirements of this rule shall be eligible for an equivalent visible particulate emission limitation pursuant to paragraph (C) of rule 3745-17-07 of the Administrative Code.

(v) The coal-fired fuel burning equipment is operated and maintained in a manner which will optimize combustion efficiency and minimize visible particulate emissions.

(vi) During January and July of each year, the owner or operator shall submit reports to the director which document the quality and quantity

(on a dry basis) of each shipment of coal received during the previous six calendar months for the coal-fired fuel burning equipment and which demonstrate compliance with the requirements of paragraph (C)(7)(a)(i) of this rule. Data provided by the coal supplier(s) may be used for these semi-annual reports if such data are accurate and representative of the quality and quantity of each shipment of coal received for the fuel burning equipment.

(b) Any owner or operator of coal-fired fuel burning equipment who chooses to comply with the requirements of paragraph (C)(7)(a) of this rule in lieu of the requirements of paragraph (C)(1) or (C)(2) of this rule shall notify the director in writing. The written notification shall include sufficient information and commitments to demonstrate compliance with the requirements of paragraph (C)(7)(a) of this rule. If the information and commitments are adequate to demonstrate compliance with all of the requirements of paragraph (C)(7)(a) of this rule on a continuing basis, the alternative emission requirements shall be specified in the terms and conditions of the permit to operate or variance issued for the source.

Effective: 02/01/2008

R.C. 119.032 review dates: 09/12/2007 and 02/01/2013

CERTIFIED ELECTRONICALLY
Certification

01/22/2008
Date

Promulgated Under: 119.03
Statutory Authority: 3704.03(E)
Rule Amplifies: 3704.03(A), 3704.03(E)
Prior Effective Dates: 7/17/1972, 6/18/1980, 10/1/1983, 6/14/1991

3745-17-10 Appendix

FIGURE 1

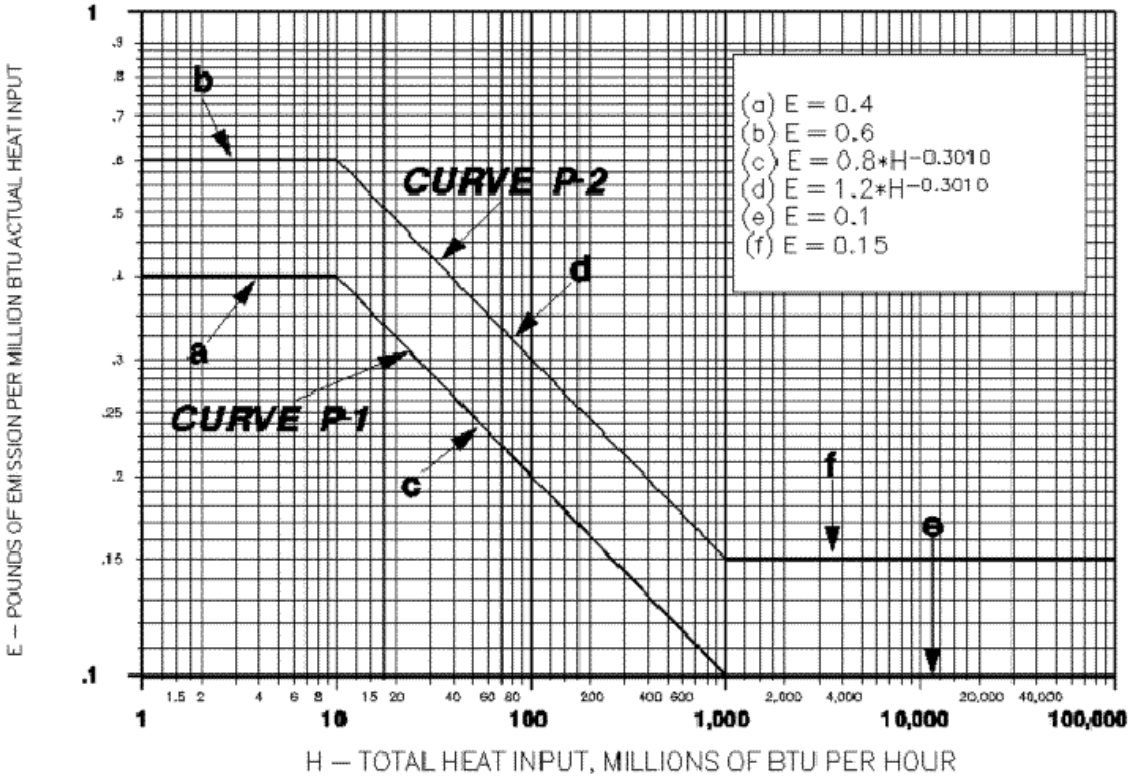

3745-17-11 **Restrictions on particulate emissions from industrial processes.**

(A) General provisions:

(1) This rule applies to any operation, process, or activity which releases or may release particulate emissions into the ambient air except:

(a) The burning of fuel for the primary purpose of producing heat or power by indirect heating in which the products of combustion do not come into direct contact with process materials;

(b) The burning of refuse;

(c) The processing of salvageable material by burning;

(d) The loading of ships and the drying of grain at grain elevator operations;

(e) Salt glazing in a gas-fired periodic brick or tile kiln, for a period of not more than two hours during any twenty-one consecutive days of operation of said kiln;

(f) The generation of fugitive dust which the director has determined is subject to rule 3745-17-08 of the Administrative Code;

(g) Any such operation, process, or activity which is subject to a particulate emission limitation contained in rule 3745-17-12 or 3745-17-13 of the Administrative Code;

(h) Surface coating processes that apply only dip coatings, roll coatings, flow coatings, or brush coatings;

(i) Surface coating processes that use less than five gallons of coatings per day, provided the owner or operator maintains coating usage records, coating purchase records, and/or production records that clearly demonstrate the actual coating usage is less than five gallons per day;

(j) Surface coating processes (e.g., for sealers, adhesives, and deadeners) that employ airless spray and bead-type (extrusion) application methods;

(k) Surface coating processes that employ hand-held cup spray guns;

(l) Surface coating processes for which the owner or operator demonstrates to the satisfaction of the director that, due to the large size of the item(s) being coated, it is technically infeasible and/or economically unreasonable (in terms of cost-effectiveness) to employ an enclosure (or hooding) and

control device for the control of the particulate emissions (any such exemption approved by the director must be approved by the United States environmental protection agency as a revision of the state implementation plan); and

(m) Jet engine test cells and stands.

(2) Emission restriction requirements for sources, which are not subject to the requirements of paragraph (B)(4), (B)(5), (B)(6) or (C) of this rule or which are not exempted under paragraph (A)(1) of this rule, are specified in "Figure II" and in "Table I" in the appendix to this rule. "Figure II" in the appendix to this rule relates uncontrolled mass rate of emission (abscissa) to maximum allowable mass rate of emission (ordinate). A source complies with the requirements of "Figure II" in the appendix to this rule if its particulate emission rate, even during operation at the maximum capacity of the source, is always equal to or less than the allowable mass rate of emission of particulate matter (A) based upon the uncontrolled mass rate of emission (U). "Table I" in the appendix to this rule relates process weight of materials introduced into any specific process (at its maximum capacity) that may result in particulate emissions to maximum allowable mass rate of emission. A source complies with the requirements of "Table I" in the appendix to this rule if its rate of particulate emission, even during operation at the process weight rate (P) which reflects the maximum capacity of the source, is always equal to or less than the allowable rate of particulate emission specified by the appropriate equation appearing at the bottom of "Table I" in the appendix to this rule and incorporating the process weight rate (P) which reflects the maximum capacity of the source. Except as otherwise indicated in paragraphs (A)(2)(a) to (A)(2)(c) of this rule, the more stringent of the two requirements shall apply.

(a) "Figure II" in the appendix to this rule shall not apply:

(i) To any source where the uncontrolled mass rate of emission cannot be ascertained;

(ii) To any source with an uncontrolled mass rate of emission of less than ten pounds per hour; or

(iii) To any fluid catalytic cracking unit at a petroleum refinery.

(b) "Table I" in the appendix to this rule shall not apply:

(i) To any source where the process weight rate cannot be ascertained; or

(ii) To any source which is located within the counties specified in paragraphs (B)(2) and (B)(3) of this rule, except as provided in paragraph (A)(2)(c) of this rule.

(c) "Table I" in the appendix to this rule shall apply to any fluid catalytic cracking unit at a petroleum refinery.

(3) For purposes of "Figure II" in the appendix to this rule, the total uncontrolled mass rate of emission from all similar process units at a plant, such units being united either physically or operationally, or otherwise located in close proximity to each other, shall be used for determining the maximum allowable mass rate of particulate emissions that pass through a stack or stacks from all such units.

(4) For purposes of "Table I" in the appendix to this rule, process weight per hour is the total weight of all materials introduced into any single, specific process (at its maximum capacity) that may cause any emission of particulate matter. Solid fuels charged will be considered as part of the process weight, but liquid and gaseous fuels and combustion air will not. For a cyclical or batch operation, the process weight per hour will be derived by dividing the total process weight by the number of hours in one complete operation from the beginning of any given process to the completion thereof, excluding any time during which the equipment is idle. For a continuous operation, the process weight per hour will be derived by dividing the process weight for a given period of time by the number of hours in that period. For fluid catalytic cracking units at petroleum refineries, "process weight" shall mean the total weight of recirculated catalyst and cold catalyst introduced into the catalyst regenerator.

(5) An air contaminant source can be subject to both of the requirements of rule 3745-17-08 of the Administrative Code and this rule if it is a fugitive dust source, as defined in paragraph (B)(7) of 3745-17-01 of the Administrative Code, and also emits, by means of one or more stacks, particulate matter that is subject to a limitation(s) in rule 3745-17-08 of the Administrative Code.

(B) Emission limitations:

(1) Except as specified in paragraph (B)(4), (B)(5), (B) (6) or (C) of this rule, any owner or operator of a source of particulate emissions which is located within the following counties shall operate said source so that the particulate emissions do not exceed the allowable emission rate specified by "curve P-1" of "Figure II" or by "Table I" in the appendix to this rule, whichever is applicable under paragraph (A)(2) of this rule: Adams, Allen, Ashtabula, Athens, Belmont, Brown, Butler, Clark, Clermont, Clinton, Columbiana, Coshocton, Cuyahoga, Darke, Defiance, Delaware, Fairfield, Franklin, Gallia, Geauga, Greene, Hamilton, Henry, Jackson, Jefferson, Lake, Lawrence, Licking, Lorain, Lucas, Madison, Mahoning, Medina, Meigs, Miami, Monroe, Montgomery, Morgan, Muskingum, Noble, Perry, Pickaway, Portage, Preble, Richland, Ross, Sandusky, Scioto, Seneca, Shelby, Stark, Summit, Trumbull, Union, Warren, Washington, Wyandot and Wood.

(2) Except as otherwise provided in paragraph (B)(4), (B)(5) or (C) of this rule, any owner or operator of a source of emissions which is located within the following counties shall operate said source so that the particulate emissions do not exceed the allowable emission rate specified by "curve P-2" of "Figure II" in the appendix to this rule: Ashland, Auglaize, Carroll, Champaign, Crawford, Fulton, Guernsey, Hancock, Hardin, Harrison, Holmes, Knox, Logan, Marion, Mercer, Morrow, Paulding, Putnam, Tuscarawas, Van Wert, Wayne and Williams.

(3) Except as otherwise provided in paragraph (B)(4), (B)(5) or (C) of this rule, any owner or operator of a source of particulate emissions which is located within the following counties shall operate said source so that the particulate emissions do not exceed the allowable emission rate specified by "curve P-3" of "Figure II" in the appendix to this rule: Erie, Fayette, Highland, Hocking, Huron, Ottawa, Pike and Vinton.

(4) Any owner or operator of a stationary gas turbine shall not cause or permit the particulate emissions from the turbine's exhaust to exceed 0.040 pound per million Btu of actual heat input.

(5) Any owner or operator of a stationary internal combustion engine shall not cause or permit the particulate emissions from the engine's exhaust to exceed the following:

(a) 0.310 pound per million Btu of actual heat input for a stationary small internal combustion engine; and

(b) 0.062 pound per million Btu of actual heat input for a stationary large internal combustion engine.

(6) The "LTV Steel Company" (OEPA premise number 1318001613) or any subsequent owner or operator of the "LTV Steel Company" facility located at 3100 East 45th street, Cleveland, Ohio shall not cause or permit the particulate emissions from the 84-inch hot strip mill reheat furnaces (OEPA source numbers P046 through P048) to exceed 19.8 pounds per hour per furnace.

(C) Requirements for surface coating processes:

(1) Any surface coating process not exempt under paragraphs (A)(1)(h) to (A)(1)(l) of this rule shall be controlled by a dry particulate filter, waterwash, or equivalent control device or devices.

(2) Any surface coating process not exempt under paragraphs (A)(1)(h) to (A)(1)(k) of this rule shall follow all of these work practices:

(a) The owner or operator shall maintain documentation of the manufacturer's recommendations, instructions, or operating manuals for the control devices

with any modifications deemed necessary by the owner or operator during the time period in which the control devices are utilized.

(b) The owner or operator shall operate the control devices in accordance with the manufacturer's recommendations, instructions, or operating manuals with any modifications deemed necessary by the owner or operator.

(c) The owner or operator shall conduct periodic inspections of the control devices to determine whether the devices are operating in accordance with the manufacturer's recommendations, instructions, or operating manuals with any modifications deemed necessary by the owner or operator. The periodic inspections of each control device shall be performed at a frequency that is based upon the recommendation of the manufacturer of the control device, and the owner or operator shall maintain a copy of the manufacturer's recommended inspection frequency. In addition to these periodic inspections, not less than once each calendar year the owner or operator shall conduct a comprehensive inspection of the control device while the emissions unit is shut down and perform any needed maintenance and repair for the control device to ensure that it is able to routinely operate in accordance with the manufacturer's recommendations.

(d) The owner or operator shall document each inspection of a control device by maintaining a record that includes the date of the inspection, a description of each problem identified and the date it was corrected, a description of the maintenance and repairs performed, and the name of the person who performed the inspection.

(e) In the event that the control devices are not operating in accordance with the manufacturer's recommendations, instructions, or operating manuals with any modifications deemed necessary by the owner or operator, the control devices shall be expeditiously repaired or otherwise returned to operation in accordance with such requirements. The owner or operator shall maintain documentation of those periods when the control devices are not operating in accordance with such requirements.

(f) Any documentation required under paragraphs (C)(2)(d) and (C)(2)(e) of this rule shall be maintained for not less than five years.

(g) Any documentation required under paragraphs (C)(2)(a) to (C)(2)(e) of this rule shall be maintained at the facility and shall be made available to Ohio EPA upon request.

(3) Any surface coating process with a permit-to-install issued after January 1, 1990 that identifies particulate emission limitations and control measures based on best available technology, best available control technology, or the lowest

achievable emission rate shall comply with such limitations and measures instead of paragraphs (C)(1) and (C)(2) of this rule.

Effective: 12/23/2011

R.C. 119.032 review dates: 10/06/2011 and 02/01/2013

CERTIFIED ELECTRONICALLY
Certification

12/13/2011
Date

Promulgated Under: 119.03
Statutory Authority: 3704.03(E)
Rule Amplifies: 3704.03(A), 3704.03(E)
Prior Effective Dates: 2/17/72, 6/18/80, 6/14/91, 1/31/98, 4/14/03, 2/01/08

3745-17-11 Appendix

TABLE I AND FIGURE II

TABLE I

Allowable Rate of Particulate Emissions Based On Process Weight At Maximum Capacity (P)

Process Weight Rate At Maximum Capacity (P)		Allowable Rate Of Particulate Emission (E)	Process Weight Rate At Maximum Capacity (P)		Allowable Rate of Particulate Emission (E)
Lb/Hr	Tons/Hr	Lb/Hr	Lb/Hr	Tons/Hr	Lb/Hr
100	0.05	0.551	16,000	8	16.5
200	0.10	0.877	18,000	9	17.9
400	0.20	1.40	20,000	10	19.2
600	0.30	1.83	30,000	15	25.2
800	0.40	2.22	40,000	20	30.5
1,000	0.50	2.58	50,000	25	35.4
1,500	0.75	3.38	60,000	30	40.0
2,000	1	4.10	70,000	35	41.3
2,500	1.25	4.76	80,000	40	42.5
3,000	1.50	5.38	90,000	45	43.6
3,500	1.75	5.96	100,000	50	44.6
4,000	2	6.52	120,000	60	46.3
5,000	2.50	7.58	140,000	70	47.8
6,000	3	8.56	160,000	80	49.0
7,000	3.50	9.49	200,000	100	51.2
8,000	4	10.4	1,000,000	500	69.0
9,000	4.50	11.2	2,000,000	1,000	77.6
10,000	5	12.0	6,000,000	3,000	92.7
12,000	6	13.6			

The allowable rate of particulate emission (E) for process weight rates (P) not specifically listed in this table shall be obtained by use of the following equations: For $0 < (P) \leq 0.05$, $(E) = 0.551$; for $0.05 < (P) \leq 30$, $(E) = 4.10\ (P)^{0.67}$; and for $(P) > 30$, $(E) = 55.0\ (P)^{0.11} - 40.0$.

FIGURE II

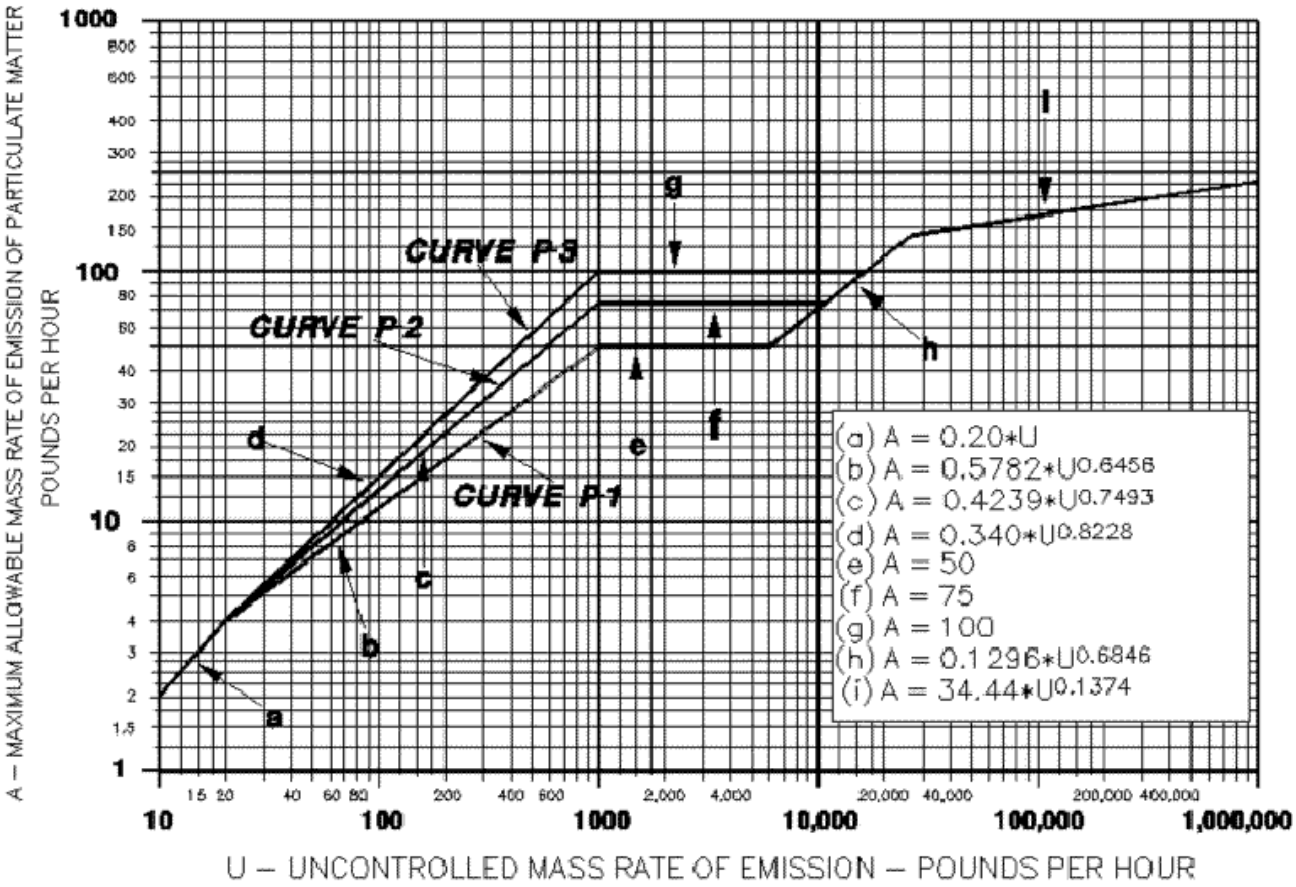
A – MAXIMUM ALLOWABLE MASS RATE OF EMISSION OF PARTICULATE MATTER
POUNDS PER HOUR
U – UNCONTROLLED MASS RATE OF EMISSION – POUNDS PER HOUR
CURVE P-3
CURVE P-2
CURVE P-1
a
b
c
d
e
f
g
h
i
(a) A = 0.20*U
(b) A = 0.5782*U^0.6456
(c) A = 0.4239*U^0.7493
(d) A = 0.340*U^0.8228
(e) A = 50
(f) A = 75
(g) A = 100
(h) A = 0.1296*U^0.6846
(i) A = 34.44*U^0.1374

3745-17-12 **Additional restrictions on particulate emissions from specific air contaminant sources in Cuyahoga county.**

[Comment: For dates of non-regulatory government publications, publications of recognized organizations and associations, federal rules, and federal statutory provisions referenced in this rule, see the last paragraph of rule 3745-17-01 of the Administrative Code titled "Incorporation by reference."]

(A) Compliance with the emission limitations and control requirements specified in this rule shall be achieved in accordance with the time schedules contained in rule 3745-17-04 of the Administrative Code.

(B) The "Aeroquip Corporation" (OEPA premise number 1318176325) or any subsequent owner or operator of the "Aeroquip Corporation" facility located at 5201 Grant Avenue, Cuyahoga Heights, Ohio shall not cause or permit any visible particulate emissions from the polyvinyl chloride resin handling system (OEPA source number F001).

(C) The "Boyas Excavating, Incorporated" (OEPA premise number 1318006023) or any subsequent owner or operator of the "Boyas Excavating, Incorporated" facility located at 2929 Broadway avenue, Cleveland, Ohio shall comply with all the following control requirements for particulate matter:

(1) For the unpaved roadways and parking areas (OEPA source number F001), there shall be no visible particulate emissions except for a period of time not to exceed three minutes during any sixty-minute observation period.

(2) For the crushed concrete storage piles (OEPA source number F002), there shall be no visible particulate emissions except for a period of time not to exceed one minute during any sixty-minute observation period.

(3) For the concrete processing operations (OEPA source numbers F003 and F004):

(a) All of the particulate emissions from source F004 shall either be vented to a baghouse or controlled by a wet suppression system.

(b) If a baghouse is employed to control source F004, the total combined particulate emissions from all stacks associated with source F004 shall not exceed 2.4 pounds per hour.

(c) Visible particulate emissions of fugitive dust from source F003, and from source F004 if a wet suppression system is employed, shall not exceed the following requirements:

(i) For the screening and conveying operations subject to Ohio environmental protection agency permit to install number 13-1430, as issued on September 11, 1985, five per cent opacity as a six-minute average; and

(ii) For all other operations, ten per cent capacity as a six-minute average.

(D) The "Boyas Excavating, Incorporated" (OEPA premise number 1318007300) or any subsequent owner or operator of the "Boyas Excavating, Incorporated" facility located at 2929 Broadway avenue, Cleveland, Ohio shall comply with all the following control requirements for particulate matter from the sand and gravel processing operation (OEPA source number F001):

(1) All of the particulate emissions from this operation shall either be vented to a baghouse or controlled by a wet suppression system.

(2) If a baghouse is employed, the total combined particulate emissions from all stacks shall not exceed 1.2 pounds per hour.

(3) If a wet suppression system is employed, visible particulate emissions of fugitive dust shall not exceed ten per cent opacity as a six-minute average.

(E) The "Boyas Excavating, Incorporated" (OEPA premise number 1318576031) or any subsequent owner or operator of the "Boyas Excavating, Incorporated" facility located at 12101 Rockside road, Valley View, Ohio shall not cause or permit any visible particulate emissions, except for a period of time not to exceed three minutes during any sixty-minute observation period, from the unpaved roadways and parking areas (OEPA source number F001).

(F) The "Cleveland Builders Supply, Incorporated" (OEPA premise number 1318122676) or any subsequent owner or operator of the facility located at Hummel and Engle roads, Brook Park, Ohio shall comply with all the following control requirements for particulate matter:

(1) For the unpaved roadways and parking areas (OEPA source number F001), there shall be no visible particulate emissions except for a period of time not to exceed three minutes during any sixty-minute observation period.

(2) For the paved roadways and parking areas (OEPA source number F001), there shall be no visible particulate emissions except for a period of time not to exceed one minute during any sixty-minute observation period.

(3) For the cement transfer system associated with the concrete block manufacturing plant (OEPA source number F003), there shall be no visible particulate emissions.

(4) For the aggregate handling operation associated with the concrete block manufacturing plant (OEPA source number F003):

(a) All of the particulate emissions from this operation shall either be vented to a baghouse or controlled by a wet suppression system.

(b) If a baghouse is employed, the total combined particulate emissions from all stacks shall not exceed 0.12 pound per hour.

(c) If a wet suppression system is employed, visible particulate emissions of fugitive dust shall not exceed ten per cent opacity as a six-minute average.

(5) For the wet concrete batching operation (OEPA source number F004), the particulate emissions shall not exceed 0.17 pound per hour.

(G) The "Cleveland Trinidad Paving Company" (OEPA premise number 1318001799) or any subsequent owner or operator of the "Cleveland Trinidad Paving Company" facility located at 3601 Trumbull avenue, Cleveland, Ohio shall comply with all the following emission limitations for particulate matter:

(1) For asphalt plant number 1 (OEPA source number P901), the particulate emissions shall not exceed 26.3 pounds per hour.

(2) For asphalt plant number 2 (OEPA source number P902), the particulate emissions shall not exceed 9.3 pounds per hour.

(H) The "Cuyahoga Foundry Company" (OEPA premise number 1318171954) or any subsequent owner or operator of the "Cuyahoga Foundry Company" facility located at 4530 East 71st street, Cuyahoga Heights, Ohio shall not cause or permit the particulate emissions from the casting shakeout operation (OEPA source number F002) to exceed 0.32 pound per hour.

(I) Except as otherwise provided in paragraphs (I)(50) and (I)(51) of this rule, the "Ford Motor Company, Cleveland Casting Plant" (OEPA premise number 1318120180) or any subsequent owner or operator of the "Ford Motor Company, Cleveland Casting Plant" facility located at 5600 Henry Ford boulevard, brook park, Ohio shall comply with all the following control requirements for particulate matter:

(1) For the paved roadways and parking areas (OEPA source number F001), visible particulate emissions shall not exceed five per cent opacity, as determined in accordance with paragraph (B)(3) of rule 3745-17-03 of the Administrative Code.

(2) For the electric induction holding furnace for cupola number 7 (OEPA source number F005), the particulate emissions shall not exceed 5.4 pounds per hour.

(3) For the molding basement refuse pan conveyor, the mold line number 1 shakeout, the mold line number 2 mold conveyor, and the mold line number 3 dredgeout fractionating system (OEPA source numbers F023, P113, P148 and P186), all the following requirements shall be met:

(a) The particulate emissions from the F unit baghouse serving sources F023, P113, P148 and P186 shall not exceed 0.0063 grain per actual cubic foot of the total exhaust gases.

(b) The particulate emissions from the pulse flow baghouse serving source F023 shall not exceed 0.0059 grain per actual cubic foot of the total exhaust gases.

(c) The particulate emissions from the wet collectors 5-2 and 5-3 serving source F023 shall not exceed 0.010 grain per actual cubic foot of total exhaust gases.

(4) For the knockout house refuse system, the number 2 cooling line shakeout and sprue/runner knockoff, the number 3 cooling line shakeout and sprue/runner knockoff (OEPA source numbers F024, P091 and P092), the particulate emissions from each of the knockout house wet collectors serving sources F024, P091 and P092 shall not exceed 0.010 grain per actual cubic foot of exhaust gases.

(5) For the number 3 electric induction holding furnace (OEPA source number F025), the mold line number 2 holding furnace (OEPA source number P160), the exhaust gases from mold line number 7 holding furnace (OEPA source number P290) which were vented to stack D-35 prior to June 14, 1991, and the mold line number 7 iron pouring (OEPA source number P291), all the particulate emissions shall be vented to the D unit baghouse and the emissions from the D unit baghouse shall not exceed 0.0055 grain per actual cubic foot of exhaust gases. Alternatively, the number 3 electric induction holding furnace (F025) and the mold line number 2 holding furnace (P160) currently vented to D unit baghouse may be vented to the AAF unit baghouse; and in such case, the emissions from the AAF unit baghouse shall not exceed 0.005 grain per actual cubic foot of exhaust gases.

(6) For the induction holding furnace number 2 (OEPA source number P026), the particulate emissions shall not exceed 0.005 grain per actual cubic foot of total exhaust gases. Alternatively, the induction holding furnace number 2 (P026) may be vented to the D unit baghouse; and in such case, the emissions from the D unit baghouse shall not exceed 0.005 grain per actual cubic foot of exhaust gases.

(7) For the shot blast cleaning and grinding of castings at the numbers 1, 2, 3, 6, 7, 9 and 10 cleaning lines (OEPA source numbers F024, P091, P092, P027, P028,

P029, P032, P033, P035 and P036), the primary shakeouts at the unhook station numbers 2 and 3 (OEPA source numbers P038 and P039), the primary shakeouts at the dump station numbers 4 through 7 (OEPA source numbers P040 through P042), the reclamation and cleaning of iron scrap using rotary mill in cleaning room (OEPA source number P050), the number 3 cooler V-6 unhook station (OEPA source number P102), the osci-rocker blast (OEPA source number P411), and the shot reclamation and refuse system (OEPA source number P908), all the following requirements shall be met:

(a) The particulate emissions from A unit baghouse serving sources F024, P091, P092, P027, P028, P029, P032, P038, P039, P042, and P908 shall not exceed 0.010 grain per actual cubic foot of total exhaust gases.

(b) The particulate emissions from B unit baghouse serving sources P027 through P029, and P102 shall not exceed 0.014 grain per actual cubic foot of total exhaust gases.

(c) The particulate emissions from C unit baghouse serving sources P029, P032, P033, P035, P036, P040, P041, P050, P411 and P908 shall not exceed 0.014 grain per actual cubic foot of total exhaust gases.

(8) The particulate emissions from each of the following hot-box core machines shall not exceed 0.0082 grain per actual cubic foot of exhaust gases:

(a) The seventeen core machines associated with the number 10 core line (OEPA source number P064); and

(b) The seven core machines associated with the number 11 core line (OEPA source number P066).

(9) For the external desulfurization associated with cupola numbers 1 and 7 and the charge bucket loading operation associated with cupola number 7 (OEPA source numbers P419 and P907), the particulate emissions from D unit baghouse serving these sources shall not exceed 0.0055 grain per actual cubic foot of total exhaust gases.

(10) For the induction holding furnace number 1 (OEPA source number P099), the particulate emissions from the AAF unit baghouse serving this source shall not exceed 0.0050 grain per actual cubic foot of total exhaust gases. Alternatively, the induction holding furnace number 1 (OEPA source number P099) currently vented to the AAF unit baghouse may be vented to the D unit baghouse; and in such case, the emissions from the D unit baghouse shall not exceed 0.0055 grain per actual cubic foot of exhaust gases.

(11) For the mold line number 1 holding furnace (OEPA source number P110), the total particulate emissions shall not exceed 1.3 pounds per hour.

(12) For the mold line number 1 iron pouring (OEPA source number P111), the particulate emissions shall not exceed 0.80 pound per hour.

(13) For the mold line number 1 mold conveyor and No. 1 ML cope and drag punch-up (OEPA source numbers P112 and P114), the total combined particulate emissions from both of these sources shall not exceed 10.5 pounds per hour.

(14) For the mold line number 1 casting hookups, return sand system, mag belt conveyor, new sand transfer belt conveyor, sand storage bins, and sand cooling system (OEPA source numbers P115 through P120), the total combined particulate emissions from all of these sources shall not exceed 9.6 pounds per hour.

(15) Reserved.

(16) For the mold line number 2 iron pouring and mold conveyor (OEPA source numbers P141 and P145), the mold line number 3 iron pouring, cope mold machine, drag mold machine, core handling and mold conveyor (OEPA source numbers P171 through P174, and P177), and the tapping operations associated with cupola number 1 (OEPA source number P901) and with cupola number 2 (OEPA source number P902), the total combined particulate emissions from all of these sources shall not exceed 28.3 pounds per hour.

(17) For the mold line number 2 cope mold machine (OEPA source number P142), the particulate emissions shall not exceed 1.8 pounds per hour.

(18) Reserved.

(19) For the mold line number 2 dredgeout casting split (OEPA source number P146), the particulate emissions shall not exceed 2.2 pounds per hour.

(20) For the mold line number 2 rotary sand cooling screen (OEPA source number P147), the particulate emissions shall not exceed 4.4 pounds per hour.

(21) For the mold line number 2 mold conveyor, casting shakeout, drag punchout, cope punchout, sand transfer, mag belt, and sand preparation (OEPA source numbers P148 through P151, and P156 through P158), the total combined particulate emissions from all of these sources shall not exceed 13.2 pounds per hour.

(22) For the mold line number 2 dredgeout fractionating system (OEPA source number P152), the particulate emissions shall not exceed 1.1 pounds per hour.

(23) For the mold line number 2 sprue removal, hookup, dredgeout, and casting cooling (OEPA source numbers P153 through P155, and P159) and the mold

line number 3 casting splitter, casting hookup, and dredgeout (OEPA source numbers P187, P189 and P190), the total combined particulate emissions from all of these sources shall not exceed 6.1 pounds per hour.

(24) For the mold line number 3 mold conveyor (OEPA source number P178), the total particulate emissions shall not exceed 4.4 pounds per hour.

(25) For the mold line number 3 drag punchout and cope punchout (OEPA source numbers P179 and P180), the particulate emissions shall not exceed 0.0066 grain per actual cubic foot of total exhaust gases.

(26) For the mold line number 3 sand transfer system, new sand chute, rotary sand cooling screen, sand mullers, casting shakeout, sprue removal and mag belt (OEPA source numbers P181 through P185, P188 and P191), the total combined particulate emissions shall not exceed 4.8 pounds per hour.

(27) The exhaust gases from mold line number 7 holding furnace (OEPA source number P290) which are not vented to the D unit baghouse shall be vented to stacks D-33 and E-19 and the total combined particulate emissions from stacks D-33 and E-19 shall not exceed 3.0 pounds per hour.

(28) For the mold line number 7 mold conveyor (OEPA source number P297), the total particulate emissions shall not exceed 3.2 pounds per hour.

(29) For the mold line number 7 primary and secondary shakeouts, automatic castings extractor, return sand system, and fluid bed sand cooler (OEPA source numbers P293 through P296), the total combined particulate emissions shall not exceed 7.7 pounds per hour.

(30) For the mold line number 7 block casting shakeout, sand muller, casting cooling, and conveyor equipment and storage hoppers (OEPA source numbers P298 through P301), the particulate emissions from such sources shall be vented to one or more of the following wet collectors and such emissions from wet collectors 6-1, 6-2 and 6-3, from wet collectors 8-1, 8-2 and 8-3, and from wet collector 9-1 shall not exceed 0.010 grain per actual cubic foot of total exhaust gases.

(31) Reserved.

(32) Reserved.

(33) Reserved.

(34) Reserved .

(35) Reserved.

(36) Reserved.

(37) Reserved.

(38) For the cupola number 1 (OEPA source number P901), both the following requirements shall be met:

(a) The particulate emissions from the wet collector serving this source shall not exceed 29.1 pounds per hour.

(b) The particulate emissions from the tapping operations associated with this source shall be vented to stack G-36.

(39) For the cupola number 2 (OEPA source number P902), both the following requirements shall be met:

(a) The particulate emissions from the wet collector serving this source shall not exceed 27.4 pounds per hour.

(b) The particulate emissions from the tapping operations associated with this source shall be vented to stack G-36.

(40) For the cupola number 3 (OEPA source number P903), both the following requirements shall be met:

(a) The particulate emissions from the wet collector serving this source shall not exceed 27.4 pounds per hour.

(b) The particulate emissions from the tapping operations associated with this source shall be vented to the D-Unit Baghouse and shall not exceed 0.0055 grain per actual cubic foot of exhaust gases.

(41) Reserved

(42) Reserved

(43) For the cupola number 7 (OEPA source number P907), both the following requirements shall be met:

(a) The particulate emissions from the wet collector serving this source shall not exceed 26.8 pounds per hour.

(b) The particulate emissions from stack B-53 serving the tapping operations associated with this source shall not exceed 1.5 pounds per hour.

(44) Reserved

(45) For the sand mullors/sand handling system (OEPA source number P912), the particulate emissions from the core room wet collectors 4 and 6 serving this source shall not exceed 0.010 grain per actual cubic foot of total exhaust gases.

(46) For the bentonite unloading system (OEPA source number P913), the particulate emissions shall not exceed 0.0068 grain per actual cubic foot of total exhaust gases.

(47) Operating hour restrictions and recordkeeping requirements:

(a) The operating hours for sources P027, P028, P029, P032, P033, P035 and P036 shall not exceed a total of 71.4 operating hours during any calendar day.

(b) Reserved

(c) The total operating hours for the cupolas associated with sources P901 through P903 and P907 shall not exceed sixty-four hours during any calendar day. Time intervals during which a cupola is not in a state of blast (standby mode) shall not be included in the determination of daily operating hours. Blast is defined as the period during which air is forced through the tuyeres onto a cupola burden consisting of incandescent coke, limestone and scrap metal.

(d) The total operating hours for mold lines numbers 1 through 3, and 7 shall not exceed 64.4 hours during any calendar day.

(e) Daily records shall be maintained for the operating times of each source identified in paragraph (I)(47) of this rule to document compliance with the specified hourly operating restrictions. These records shall be maintained by the owner or operator for a period of not less than five years.

(48) The height of stack G-36 (serving sources P141, P145, P171, P172, P177, and the tapping operations associated with P901 and P902) shall not be less than one hundred thirty feet above ground level. Alternatively, the number 2 mold line iron pouring (P141) and the number 3 mold line iron pouring (P171) currently vented to stack G-36 may be vented to the G unit baghouse; and in such case, the emissions from the G unit baghouse shall not exceed 0.005 grain per actual cubic foot of exhaust gases.

(49) Reserved.

(50) The director may establish an alternative emission limitation or control requirement for an emissions unit at the "Ford Motor Company, Cleveland

Casting Plant," which is less stringent than, or inconsistent with, an allowable emission limitation or control requirement contained in paragraph (I) of this rule if the alternative emission limitation or control requirement is specified in a valid permit issued pursuant to rule 3745-31-02 or Chapter 3745-77 of the Administrative Code, and the administrator of the United States environmental protection agency is given at least thirty days notice of the director's proposed issuance of such permit if issued pursuant to rule 3745-31-02 of the Administrative Code or at least forty-five days notice of the director's proposed issuance of such permit if issued pursuant to Chapter 3745-77 of the Administrative Code and does not object to such issuance during the applicable review and comment period or, in the event an objection from the administrator is received, the objection is resolved prior to issuance. Compliance with an alternative emission limitation or control requirement in effect pursuant to this paragraph shall not constitute a violation of paragraph (I) of this rule pending amendment of the paragraph in accordance with paragraph (I)(51) of this rule. To obtain an alternative emission limitation or control requirement, "Ford Motor Company, Cleveland Casting Plant" shall demonstrate, using the United States environmental protection agency air quality modeling guidelines in effect at the time that the complete application is received, that the alternative emission limitation or control requirement will result in ambient air quality that complies with the "National Ambient Air Quality Standards" for particulate matter having an aerodynamic diameter less than or equal to ten micrometers, as set forth at 40 CFR 50.6.

(51) After the effective date of any permit to install or Title V permit, as that term is defined by paragraph (KK) of rule 3745-77-01 of the Administrative Code, containing an alternative emission limitation or control requirement which is less stringent than, or inconsistent with, an allowable emission limitation or control requirement contained in paragraph (I) of this rule, the director shall amend paragraph (I) of this rule to reflect such alternative emission limitation or control requirement.

(J) The "General Chemical Corporation" (OEPA premise number 1318222594) or any subsequent owner or operator of the "General Chemical Corporation" facility located at 5000 Warner road, Garfield Heights, Ohio shall not cause or permit the particulate emissions from each of the aluminum sulfate solution production digesters (OEPA source numbers P004, P005, and P006) to exceed 2.2 pounds per hour.

(K) The "Harval, Incorporated" (OEPA premise number 1318005960) or any subsequent owner or operator of the "Harval, Incorporated" facility located at 1971 Carter road, Cleveland, Ohio shall not cause or permit any visible particulate emissions except for a period of time not to exceed three minutes during any sixty-minute observation period, from the unpaved roadways and parking areas (OEPA source number F001).

(L) The "Independence Excavating Incorporated" (OEPA premise number 1318225730) or any subsequent owner or operator of the "Independence Excavating Incorporated"

facility located at 4905 Warner road, Garfield Heights, Ohio shall comply with all the following control requirements for particulate matter from the concrete processing operation (OEPA source number F003):

(1) All of the particulate emissions from this operation shall either be vented to a baghouse or controlled by a wet suppression system.

(2) If a baghouse is employed, the total combined particulate emissions from all stacks shall not exceed 0.87 pound per hour.

(3) If a wet suppression system is employed, visible particulate emissions of fugitive dust shall not exceed ten per cent opacity as a six-minute average.

(M) The "Lake Erie Asphalt Products Company" (OEPA premise number 1318220278) or any subsequent owner or operator of the "Lake Erie Asphalt Products Company" facility located at 8200 Old Granger road, Garfield Heights, Ohio shall comply with all the following emission limitations for particulate matter:

(1) For the unpaved roadways and parking areas (OEPA source number F001), there shall be no visible particulate emissions except for a period of time not to exceed three minutes during any sixty-minute observation period.

(2) For the paved roadways and parking areas (OEPA source number F001), there shall be no visible particulate emissions except for a period of time not to exceed one minute during any sixty-minute observation period.

(3) For the asphaltic concrete plant (OEPA source number P901), the particulate emissions shall not exceed 6.0 pounds per hour.

(N) The "Lincoln Electric Company" (OEPA premise number 1318202137) or any subsequent owner or operator of the "Lincoln Electric Company" facility located at 22801 St. Clair Avenue, Cleveland, Ohio shall comply with all the of following emission limitations for particulate matter:

(1) For boiler number 4 (OEPA source number B003), the particulate emissions shall not exceed 0.11 pound per million Btu of actual heat input.

(2) For boiler number 3 (OEPA source number B004), the particulate emissions shall not exceed 0.12 pound per million Btu of actual heat input.

(3) For the rotary iron powder kiln (OEPA source number P901), the particulate emissions shall not exceed 1.8 pounds per hour.

(4) For the rotary flux kilns A through C (OEPA source numbers P902 through P904), the particulate emissions shall not exceed 2.4 pounds per hour from each kiln.

(O) The "LTV Steel Company" (OEPA premise number 1318000078) or any subsequent owner or operator of the "LTV Steel Company" facility located at 3341 Jennings road, Cleveland, Ohio shall comply with all the following control requirements for particulate matter:

(1) For the paved and unpaved roadways and parking areas (OEPA source number F001), visible particulate emissions shall not exceed five per cent opacity, as determined in accordance with paragraph (B)(3) of rule 3745-17-03 of the Administrative Code.

(2) For the desulfurization operation associated with the hot metal reladling, desulfurization and slag raking station (OEPA source number F009) and the auxiliary desulfurization station (OEPA source number F013), only one of these desulfurization stations shall be operated at any time.

(3) For the hot metal reladling, desulfurization, slag raking, and ladle transfer operations (OEPA source number F009), the total particulate emissions from the baghouse serving this source shall not exceed 21.0 pounds per hour.

(4) For the stove stacks associated with blast furnace C-1 (OEPA source number P903), the particulate emissions shall not exceed 11.2 pounds per hour.

(5) For the electric arc furnaces number 79 and 80 (OEPA source numbers P901 and P904) and the raw material handling, slag handling, and teeming operations associated with the electric arc furnace shop (OEPA source numbers F006 through F008), the total combined particulate emissions shall not exceed 27.3 pounds per hour.

(6) For the machine scarfer (OEPA source number P004), the particulate emissions shall not exceed 0.00 pound per hour.

(7) For boilers 26 through 31 (OEPA source numbers B004 through B009), the particulate emissions shall not exceed 0.00 pound per million Btu of actual heat input from each boiler.

(8) For boilers 32 through 34 (OEPA source numbers B010 through B012):

(a) The particulate emissions shall not exceed 0.040 pound per million Btu of actual heat input from each boiler.

(b) Only one boiler shall be operated at any time.

(9) For blast furnace C-3 (OEPA source number P902), the particulate emissions shall not exceed 0.00 pound per hour.

(10) For the numbers 1 and 2 basic oxygen furnaces (OEPA source numbers P905 and P906) at the number 1 shop, the total particulate emissions from all of the stacks of the electrostatic precipitator serving such sources shall not exceed 39.8 pounds per hour.

(11) There shall be no processing of raw materials at blast furnace C-3 (OEPA source number F004).

(P) The "LTV Steel Company" (OEPA premise number 1318001613) or any subsequent owner or operator of the "LTV Steel Company" facility located at 3100 East 45th street, Cleveland, Ohio shall comply with all the following control requirements for particulate matter:

(1) For boilers A through C (OEPA source numbers B001 through B003), the particulate emissions shall not exceed 0.086 pound per million Btu of actual heat input from each boiler.

(2) For the paved and unpaved roadways and parking areas (OEPA source number F001), visible particulate emissions shall not exceed five per cent opacity, as determined in accordance with paragraph (B)(3) of rule 3745-17-03 of the Administrative Code.

(3) For the number 2 coke plant quench station (OEPA source number P057):

(a) The weekly average concentration of total dissolved solids of the quench water shall not exceed twelve hundred milligrams per liter of water; and

(b) The interior of the quench tower shall be equipped with a baffle system which is designed and maintained in accordance with good engineering practice and which provides coverage of not less than ninety-five per cent of the cross-sectional area of the tower.

(4) For the blast furnaces C-2 and C-4 (OEPA source numbers P901 and P902), the particulate emissions shall not exceed 0.00 pound per hour from each source.

(5) For the stove stacks associated with blast furnaces C-5 and C-6 (OEPA source numbers P903 and P904), the particulate emissions shall not exceed 11.7 pounds per hour from each source.

(6) For the charging and tapping operations associated with the numbers 1 and 2 basic oxygen furnaces (OEPA source numbers P905 and P906), the hot metal desulfurization and hot metal transfer station (OEPA source number F011), and the teeming operation (OEPA source number F013), the particulate emissions from the stack of the secondary emission control baghouse serving such sources shall not exceed 10.3 pounds per hour.

(7) For boiler 234 (OEPA source number B009), the particulate emissions shall not exceed 0.00 pound per million Btu of actual heat input.

(8) For the coke oven batteries numbers 1 through 3 at the number 1 coke plant (OEPA source numbers B901 through B903), the particulate emissions shall not exceed 0.00 pound per hour per battery.

(9) There shall be no processing of raw materials at blast furnaces C-2 and C-4 (OEPA source number F009).

(10) For the number 1 and 2 basic oxygen furnaces (OEPA source numbers P905 and P906) at the number 2 shop, the particulate emissions from the suppressed combustion systems serving these sources shall not exceed 15.0 pounds per hour from each system.

(11) For the number 1 coke plant quench stations numbers 1 and 4 (OEPA source numbers P066 and P067), the particulate emissions shall not exceed 0.00 pound per hour.

(12) For the coal handling and processing operations at the number 2 coke plant (OEPA source number F006), the total operating hours shall not exceed 16 hours during any calendar day. Daily records shall be maintained of the operating time to document compliance with this restriction. These records shall be maintained by the owner or operator for a period of not less than three years.

(13) There shall be no coke handling or processing at the number 1 coke plant (OEPA source number F007).

(Q) The "Luria Brothers" (OEPA premise number 1318122776) or any subsequent owner or operator of the "Luria Brothers" facility located at 18951 Snow road, Brook Park, Ohio shall comply with both the following emission limitations for particulate matter:

(1) For the material handling operation (OEPA source number F003) and the material handling operation associated with the automobile shredding line (OEPA source number P901), there shall be no visible particulate emissions.

(2) For the automobile shredding line (OEPA source number P901), the particulate emissions shall not exceed 4.0 pounds per hour.

(R) The "Meech Foundry, Incorporated" (OEPA premise number 1318224005) or any subsequent owner or operator of the "Meech Foundry, Incorporated" facility located at 4730 Warner road, Garfield Heights, Ohio shall comply with all the following control requirements for particulate matter and recordkeeping requirements:

(1) For the cupola furnace (OEPA source number P901), the particulate emissions shall not exceed 10.8 pounds per hour.

(2) For the inoculation operation associated with the cupola furnace (OEPA source number P901), the operating hours shall not exceed 0.1 hour during any calendar day.

(3) For the iron pouring and cooling operation associated with the cupola furnace (OEPA source number P901), the operating hours shall not exceed 3.0 hours during any calendar day.

(4) Daily records shall be maintained for the operations identified in paragraphs (R)(2) and (R)(3) of this rule to document compliance with the specified hourly operating restrictions.

(S) The "Ohio Aluminum Industries, Incorporated" (OEPA premise number 1318226416) or any subsequent owner or operator of the "Ohio Aluminum Industries, Incorporated" facility located at 4840 Warner road, Garfield Heights, Ohio shall comply with all the following emission limitations for particulate matter:

(1) For the sand handling operation associated with the sand reclamation process (OEPA source number F001), the particulate emissions shall not exceed 0.90 pound per hour.

(2) For the mold making operation associated with the sand reclamation process (OEPA source number F001), the particulate emissions shall not exceed 0.0055 pound per hour.

(3) For the casting shakeout operation associated with the sand reclamation process (OEPA source number F001), the particulate emissions shall not exceed 0.016 pound per hour.

(4) For the cleaning and finishing process (OEPA source number P901):

(a) The total combined particulate emissions from the control equipment shall not exceed 0.11 pound per hour.

(b) There shall be no visible particulate emissions from the cleaning room.

(T) The "Reilly Industries" (OEPA premise number 1318002735) or any subsequent owner or operator of the "Reilly Industries" facility located at 3201 Independence road, Cleveland, Ohio shall not cause or permit the total combined emission of particulate matter from the coal tar pitch cooling tanks number 50, 52, 127, and 130 through 133 (OEPA source numbers P014 through P017, and P019) to exceed 0.40 pound per hour.

(U) The "Schloss Paving Company" (OEPA premise number 1318224741) or any subsequent owner or operator of the "Schloss Paving Company" facility located at 13700 McCracken road, Cleveland, Ohio shall comply with all the following emission limitations for particulate matter:

(1) For the unpaved roadways and parking areas (OEPA source number F001), there shall be no visible particulate emissions except for a period of time not to exceed three minutes during any sixty-minute observation period.

(2) For the paved roadways and parking areas (OEPA source number F001), there shall be no visible particulate emissions except for a period of time not to exceed one minute during any sixty-minute observation period.

(3) For the asphaltic concrete plant (OEPA source number P901), the particulate emissions shall not exceed 6.0 pounds per hour.

(V) The "Standard Slag Company" (OEPA premise number 1318002662) or any subsequent owner or operator of the "Standard Slag Company" facility located at Campbell road and Harvard avenue, Cleveland, Ohio shall comply with all the following control requirements for particulate matter:

(1) For the unpaved roadways and parking areas (OEPA source number F001), there shall be no visible particulate emissions except for a period of time not to exceed three minutes during any sixty-minute observation period.

(2) For the paved roadways and parking areas (OEPA source number F001), there shall be no visible particulate emissions except for a period of time not to exceed one minute during any sixty-minute observation period.

(3) For the slag storage piles (OEPA source number F002), there shall be no visible particulate emissions except for a period of time not to exceed one minute during any sixty-minute observation period.

(4) For the slag processing operations (OEPA source number F005):

(a) All of the particulate emissions from this operation shall either be vented to a baghouse or controlled by a wet suppression system.

(b) If a baghouse is employed, the total combined particulate emissions from all stacks shall not exceed 4.9 pounds per hour.

(c) If a wet suppression system is employed, visible particulate emissions of fugitive dust shall not exceed ten per cent opacity as a six-minute average.

(W) The "Stein, Incorporated" (OEPA premise number 1318003929) or any subsequent owner or operator of the "Stein, Incorporated" facility located at 3100 East 45th

street, Cleveland, Ohio shall comply with both the following emission limitations for particulate matter:

(1) For the slag storage piles (OEPA source number F005), there shall be no visible particulate emissions except for a period of time not to exceed one minute during any sixty-minute observation period.

(2) For the slag processing operations (OEPA source numbers F006 and F007), visible particulate emissions of fugitive dust shall not exceed ten per cent opacity as a six-minute average.

(X) The "Stein, Incorporated" (OEPA premise number 1318005076) or any subsequent owner or operator of the "Stein, Incorporated" facility located at 3341 Jennings road, Cleveland, Ohio shall comply with all the following emission limitations for particulate matter:

(1) For the unpaved roadways and parking areas (OEPA source number F001), there shall be no visible particulate emissions except for a period of time not to exceed three minutes during any sixty-minute observation period.

(2) For the slag unloading operation (OEPA source number F002), visible particulate emissions of fugitive dust shall not exceed ten per cent opacity as a six-minute average.

(3) For the slag processing operation (OEPA source number F003), visible particulate emissions of fugitive dust shall not exceed ten per cent opacity as a six-minute average.

(4) For the slag storage piles (OEPA source number F004), there shall be no visible particulate emissions except for a period of time not to exceed one minute during any sixty-minute observation period.

(Y) The "T & B Foundry Company" (OEPA premise number 1318000504) or any subsequent owner or operator of the "T & B Foundry Company" facility located at 2469 East 71st street, Cleveland, Ohio shall comply with all the following emission limitations for particulate matter:

(1) For the unpaved roadways and parking areas (OEPA source number F001), there shall be no visible particulate emissions except for a period of time not to exceed three minutes during any sixty-minute observation period.

(2) For the paved roadways and parking areas (OEPA source number F001), there shall be no visible particulate emissions except for a period of time not to exceed one minute during any sixty-minute observation period.

(3) For the iron pouring and cooling operations (OEPA source number F003), there shall be no visible emissions.

(4) For the cupola furnace (OEPA source number P901), the particulate emissions shall not exceed 14.0 pounds per hour.

(Z) If any unpaved roadways and parking areas, or portions thereof, identified in paragraphs (C)(1), (E), (K), and (X)(1) of this rule are paved, the paved portions of the roadways and parking areas shall be subject to a limitation of no visible particulate emissions except for a period of time not to exceed one minute during any sixty-minute observation period.

Effective: 02/01/2008

R.C. 119.032 review dates: 09/12/2007 and 02/01/2013

CERTIFIED ELECTRONICALLY
Certification

01/22/2008
Date

Promulgated Under: 119.03
Statutory Authority: 3704.03(E)
Rule Amplifies: 3704.03(A), 3704.03(E)
Prior Effective Dates: 6/14/1991, 12/6/1991, 11/15/1995, 1/31/1998

3745-17-13 **Additional restrictions on particulate emissions from specific air contaminant sources in Jefferson county.**

[Comment: For dates of non-regulatory government publications, publications of recognized organizations and associations, federal rules, and federal statutory provisions referenced in this rule, see the last paragraph of rule 3745-17-01 of the Administrative Code titled "Incorporation by reference."]

(A) Compliance with the emission limitations and control requirements specified in this rule shall be achieved in accordance with the time schedules contained in rule 3745-17-04 of the Administrative Code.

(B) The "Satralloy, Incorporated" (OEPA premise number 1741000060) or any subsequent owner or operator of the "Satralloy, Incorporated" facility located at Mingo Junction-Goulds road, Cross Creek township, Jefferson county, Ohio shall comply with the following emission limitations for particulate matter:

(1) For the unpaved roadways and parking areas (OEPA source number F001), there shall be no visible particulate emissions except for a period of time not to exceed three minutes during any sixty-minute observation period.

(2) For the paved roadways and parking areas (OEPA source number F001), there shall be no visible particulate emissions except for a period of time not to exceed one minute during any sixty-minute observation period.

(C) The "Wheeling-Pittsburgh Steel Corporation" (OEPA premise number 0641090010) or any subsequent owner or operator of the "Wheeling-Pittsburgh Steel Corporation" facility located at South Third street, Steubenville, Ohio shall comply with the work practice plan in the appendix to this rule for the control of fugitive dust from the roadways and parking areas (OEPA source number F101).

(D) The "Wheeling-Pittsburgh Steel Corporation" (OEPA premise number 0641090010) or any subsequent owner or operator of the "Wheeling-Pittsburgh Steel Corporation" facility located at McLister avenue, Mingo Junction, Ohio shall comply with all the following control requirements for particulate matter:

(1) For the roadways and parking areas (OEPA source number F001), this facility shall comply with the work practice plan in the appendix to this rule for the control of fugitive dust.

(2) For the hot metal transfer operation from railcar to charge ladle (OEPA source number F009), the particulate emissions from the baghouse serving this source shall not exceed 3.5 pounds per hour.

(3) For the reheat furnaces number 2 through 4 (OEPA source numbers P006 through P008), the particulate emissions from each furnace shall not exceed 6.0 pounds per hour.

(4) For the blast furnace number 5 (OEPA source number P903):

(a) Visible particulate emissions from the casthouses shall not exceed fifteen per cent opacity as a six-minute average at all times.

(b) The total particulate emissions from the baghouse serving the casthouses shall not exceed 2.52 pounds per hour.

(c) For the clean gas bleeders, all the blast furnace gases shall be vented to a flare system which is designed and operated in accordance with good engineering practice and capable of efficiently combusting the gases. The particulate emissions from the flare system, which are attributable to the uncombusted blast furnace gases, shall not exceed 1.63 pounds per hour.

(d) The total particulate emissions from the stove stacks serving source P903 shall not exceed 2.95 pounds per hour.

(e) The maximum daily production rate for the blast furnace shall not exceed four thousand five hundred net tons of metal per day. Daily records shall be maintained for the production rate to document compliance with this production restriction. These records shall be maintained by the owner or operator for a period of not less than three years.

(5) For the basic oxygen furnaces (OEPA source numbers P904 and P905), the total particulate emissions from the scrubbers serving these sources shall not exceed 8.86 pounds per hour.

(6) For the desulfurization station (OEPA source number P907), the particulate emissions from the baghouse serving this source shall not exceed 3.71 pounds per hour.

Effective: 02/01/2008

R.C. 119.032 review dates: 09/12/2007 and 02/01/2013

CERTIFIED ELECTRONICALLY
Certification

01/22/2008
Date

Promulgated Under: 119.03
Statutory Authority: 3704.03(E)
Rule Amplifies: 3704.03(A), 3704.03(E)
Prior Effective Dates: 6/14/1991, 12/6/1991, 11/15/1995, 1/31/1998

3745-17-13 Appendix

Work Practice Plan for the Control of Fugitive Dust Emissions
From Roadways and Parking Areas at the Wheeling-Pittsburgh Steel Corporation,
Steubenville and Mingo Junction Facilities

A. Allowable Emission Rates

1. Total combined emissions of particulate matter with an aerodynamic diameter less than or equal to a nominal ten micrometers ("PM_{10}") from unpaved roads, parking lots, laydown, entrance, unloading areas and berms, and irregular paved surfaces, and from paved roads, which are located at the Steubenville facility and are identified in Sections B and C of this Appendix, shall not exceed 1.72 pounds per hour.

2. Total combined emissions of PM_{10} from unpaved roads, parking lots, laydown, entrance, unloading areas and berms, and irregular paved surfaces, and from paved roads, which are located at the Mingo Junction facility and are identified in Sections B and C of this Appendix, shall not exceed 7.67 pounds per hour.

3. Compliance with the emission limitations specified in Section A.1. and A.2. of this Appendix shall be determined by the methodology set forth in the U.S. Environmental Protection Agency reference document Control of Open Fugitive Dust Sources (EPA-450/3-88-008), Sections 2.0 and 3.0, and using the dust control plans identified in Sections B and C of this Appendix.

B. Unpaved Roads, Parking Lots, Laydown, Entrance, Unloading Areas and Berms, and Irregular Paved Surfaces–Chemical Suppression

1. The Company shall employ dust control measures on all unpaved surfaces, and irregular paved surfaces that cannot be adequately cleaned under the provisions of Section C of this Appendix, identified in this Section and in accordance with the following:

    a. All unpaved surfaces and irregular paved surfaces identified in Attachment 1 (map) shall be treated in accordance with the schedule in Attachment 1, following the initial establishment of chemical ground inventory, with a chemical dust suppressant (petroleum resin emulsions, asphalt emulsions or acrylic cements) on a year-round (twelve-month) basis, except as provided under Sections B.1.e., B.1.f. and D below. The dust suppressant application intensity and frequency during the first two months of this program shall be sufficient to achieve the ground inventory specified in Section B.1.d. by the end of the two-month period.

b. Tri-weekly, monthly and quarterly applications shall be accomplished before the end of the first full week of the tri-week/month/quarter except as provided under Sections B.1.e., B.1.f. and D below.

c. For each dust suppressant application during the initial two-month period of the dust control program, the concentrated dust suppressant shall be diluted at a ratio of not more than five (5) parts water to one (1) part concentrate and the resulting solution shall be applied at a minimum rate of 1.0 gallon per square yard of unpaved or irregular paved surface. The dust suppressant shall be applied at sufficient intervals and intensities after the initial two-month period as to maintain the ground inventory. Except as provided in Sections B.1.f. and D below, the continuing program shall provide for the application of dust

d. suppressant specified in Attachment 1 diluted by no more than seven (7) parts water to one part chemical and applied at a rate of not less than 0.5 gallon per square yard of unpaved or irregular paved surface.

e. A minimum ground inventory of 0.25 gallon of concentrate per square yard of road surface, as specified in Section 3.0 of the USEPA reference document Control of Open Fugitive Dust Sources (EPA-450/3-88-008) shall be maintained.

f. Applications of dust suppressant may be delayed by not more than three (3) days for any scheduled date upon which the unpaved or irregular paved surface is snow and/or ice covered or has experienced>0.25 inch of rainfall.

In the event of persistent adverse weather conditions such as snow and/or ice cover or excessive rainfall, the Company may petition the Director or his representative verbally with written confirmation within three (3) days for extended exemptions which may be granted as deemed appropriate by the Director or his representative.

g. Applications of chemical dust suppressant for the second year (after establishment of the ground inventory specified in Section B.1.d.) and beyond may follow the revised schedule, application intensities, and application concentrations shown in Table 11 of Attachment 1.

2. Compliance with Section B.1. shall be determined in accordance with procedures set forth in this Appendix.

3. Control Equipment

The Company shall ensure the availability, required scheduling, and proper maintenance of spray trucks that are designed and equipped, at minimum, with a 2,000 gallon capacity tank, a spray bar system capable of applying the dust

suppressant solution at a coverage rate of at least 1.3 gallons per square yard of surface, a certified flow metering device calibrated in units of gallons per minute, and an apparatus that will facilitate manual applications of the solution to areas not readily accessible by the spray truck.

4. Recordkeeping and Reporting

   a. The Company shall maintain records relative to the program to control emissions from unpaved roads, parking lots, laydown, entrance, unloading areas and berms, and irregular paved surfaces identified in Attachment 1. These records shall include, at a minimum, the following information:

      i. Control equipment maintenance records.

      ii. Scheduled and unscheduled equipment malfunctions and downtime.

      iii. Meteorological log to include average daily temperature, daily precipitation and unusual meteorological occurrences.

      iv. The date, type and quantity received for each delivery of chemical dust suppressant.

      v. For each dust suppressant application date and for each unpaved road, area, or berm, or irregular paved surface identified in Attachment 1, start and stop times, average truck speed, number of passes, amount of solution applied, and the dilution ratio of the solution.

      vi. Identification of areas where manual spraying was utilized.

   b. These records shall be retained by the Company for five (5) years and shall be made available to the Director or his representative upon request.

   c. A calendar quarterly report shall be submitted to the Director or his representative. The report shall contain the information cited above and a description of any deviations from the control program and the reasons for such deviations. The report shall be certified to be accurate by management and shall be submitted within fifteen (15) days after the end of the quarter.

   d. The Company shall notify the Director or his representative, in writing, of any noncompliance with Section B of this Appendix. Such notice shall be submitted within five (5) days of the non-compliance occurrence and shall include a detailed explanation of the cause of such noncompliance, all remedial actions required, and the date by which compliance was or will be reestablished.

e. The Company shall submit to the Director or his representative an annual report which demonstrates compliance with the PM_{10} emission rates specified in Sections A.1. and A.2. of this Appendix for the unpaved surfaces, and the irregular paved surfaces that cannot be adequately cleaned under the provisions of Section B of this Appendix, at the Mingo Junction and Steubenville facilities. The PM_{10} emission rate for each individual network segment identified in Attachment 1 shall be reported along with the total PM_{10} emission rate for each facility. The PM_{10} emission rates shall be calculated using the methodology specified in Section A.3. of this Appendix and shall reflect the road network as it exists at the end of each calendar year. Each annual report shall be submitted by no later than January 31 of the succeeding year.

5. The Company shall implement the dust control measures of Section B no later than the effective date of this rule.

C. Paved Roads–Vacuum Sweeping

1. The Company shall employ dust control measures on all paved roads identified in this Section and in accordance with the following:

a. All paved roads identified in Attachment 1 (map) of this Appendix shall be cleaned via vacuum sweeping on a daily, year-round (twelve-month) basis except as provided under Sections C.1.a.i., C.1.a.ii., and D below.

i. Daily sweeping may be suspended only when there is snow, ice cover, or standing water on the surface. All such suspensions shall be reported and verified as required under Section C.4. (Recordkeeping and Reporting).

ii. Irregular paved surfaces that cannot feasibly or adequately be cleaned by vacuum sweeping shall be chemically sprayed in accordance with provisions of Section B.

2. Compliance with Section C.1. shall be determined in accordance with procedures set forth in this Appendix.

3. Control Equipment

a. The Company shall ensure the availability, required scheduling, and proper maintenance of vacuum sweeping trucks. The collection hopper of the vacuum truck shall be designed and maintained so as to prevent fugitive dust emissions.

b. Material collected by the vacuum sweeping truck shall be handled and disposed of in a manner that minimizes fugitive dust emissions, including but not limited to, wet dumping and chemical treatment or stabilization of

stored material.

4. Recordkeeping and Reporting

a. The Company shall maintain daily records for the paved road cleaning program. These records shall include, at a minimum, the following information:

i. Control equipment maintenance records.

ii. Scheduled and unscheduled equipment malfunctions and downtime.

iii. Meteorological log to include average daily temperature, daily precipitation and unusual meteorological occurrence.

iv. Qualitative description of the road surface conditions.

v. Start and stop time, average truck speed, number of passes for each paved road identified in Attachment 1.

vi. Identification of areas where chemical treatment was utilized.

vii. Qualitative descriptions of areas of unusually high silt loadings from spills and track-ons.

viii. Total amount of dust collected by vacuum trucks in pounds or tons.

b. These records shall be retained by the Company for five (5) years and shall be made available to the Director or his representative upon request.

c. A calendar quarterly report shall be submitted to the Director or his representative. The report shall contain all of the information cited above and a description of any deviation from the control program and the reasons for such deviation. The report shall be certified to be accurate by Company management and shall be submitted within fifteen (15) days after the end of the quarter.

d. The Company shall notify the Director or his representative, in writing, of any non-compliance with Section C of this Appendix. Such notice shall be submitted within five (5) days of the non-compliance occurrence and shall include a detailed explanation of the cause of such non-compliance, all remedial actions required and the date by which compliance was or will be reestablished.

e. The Company shall submit to the Director or his representative an annual report which demonstrates compliance with the PM_{10} emission rates specified in Sections A.1. and A.2., of this Appendix for the paved roads

(excluding irregular paved surfaces that cannot be adequately cleaned under the provisions of Section C of this Appendix) at the Mingo Junction and Steubenville facilities. The PM_{10} emission rate for each individual network segment identified in Attachment 1 shall be reported along with the total PM_{10} emission rate for each facility. The PM_{10} emission rates shall be calculated using the methodology specified in Section A.3. of this Appendix and shall reflect the road network as it exists at the end of each calendar year. Each annual report shall be submitted by no later than January 31 of the succeeding year.

5. The Company shall implement the dust control measures of Section C no later than the effective date of this rule.

D. Changes to Paved and Unpaved Road/Area Dust Control Programs

1. The Company has the right to petition the Ohio EPA for written approval of definitive treatment methods, treatment schedules and procedures or reporting requirements different from those required herein. No action shall be taken by the Company in employing the alternative practices until the Director or his representative issues a written approval to the Company. Such alternative practices must be demonstrated to the Director or his representative to result in equivalent dust control effectiveness in accordance with Control of Open Fugitive Dust Sources (EPA-450/3-88-008). The Company reserves the right to contest any disapproval of such petition in the appropriate judicial forum.

2. In the event that the Company certifies that all of a roadway or area identified in Attachment 1 has been discontinued, the dust suppression or surface cleaning program for that road or area may be terminated or reduced. If the Company begins to utilize any new roadway, parking lot or other vehicular activity area not shown in Attachment 1, it shall notify the Director or his representative in the reports required under this Appendix and treat or clean the road or area in accordance with the procedures contained herein, unless more stringent requirements are specified in any permit to install issued by the Ohio EPA for such roadway or area.

3. The Director or his representative shall not be precluded from requesting adjustments, including increased chemical suppressant application or cleaning, if on-site inspections reveal that the program contained herein does not prevent excessive visible dust entrainment and emissions from a particular road or area.

4. In the event that an unpaved road or area that has been chemically treated becomes completely hardened and cemented by such treatment so as to become like a paved road as demonstrated by observation, by compaction tests and silt analyses, or in the event that the Company paves any unpaved road or area, that road or area may be treated as a paved surface and cleaned in accordance with the procedures outlined in Section C.

Attachment 1

Figure 1: Drawing Description: Layout of the Roads at Steubenville North Plant

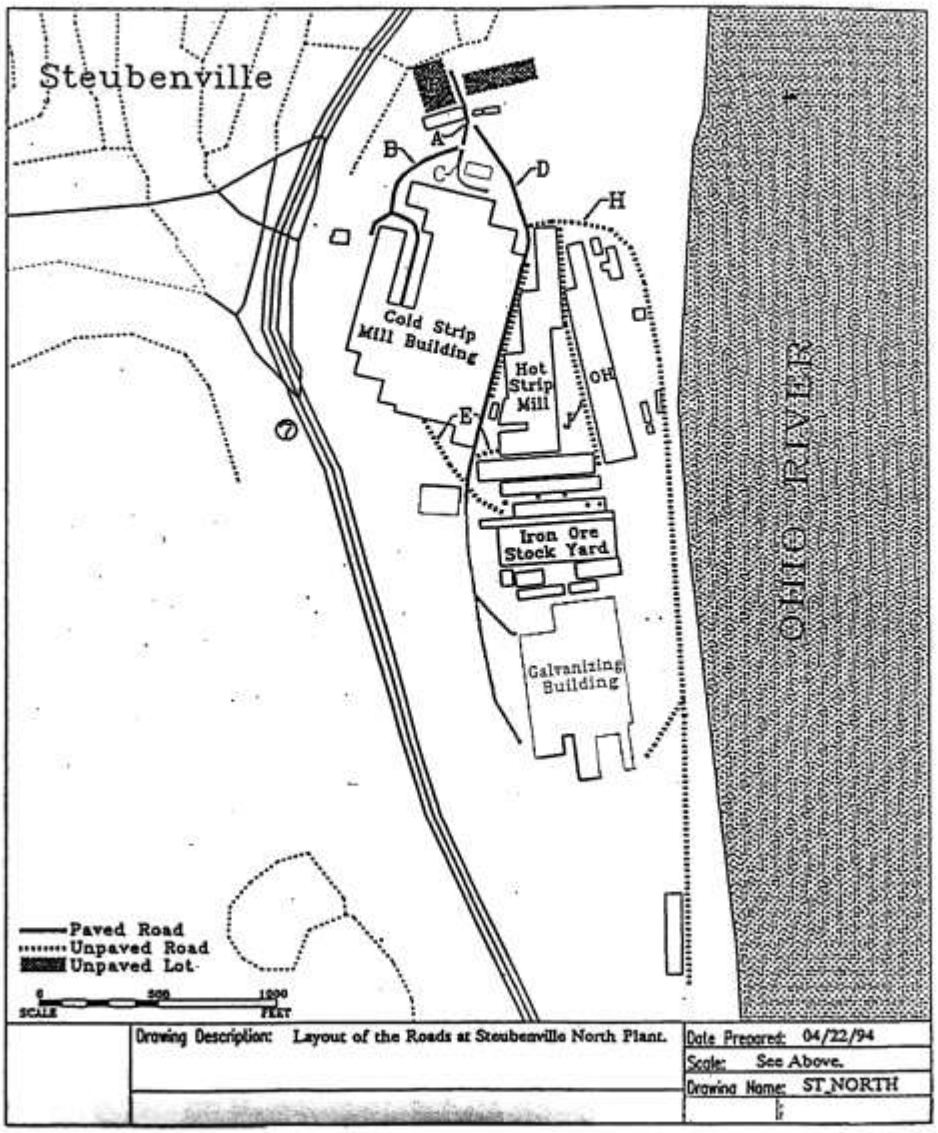

Attachment 1 Continued

Tables 1 and 2

Wheeling Pittsburgh Steel Corporation, Steubenville

Paved Roads

Road Section	Length (feet)	Width (feet)	Area (sq. yds)	Description
A	350	16	622	Entrance Road
B	1088	16	1934	Cold Strip Mill Road
C	250	16	444	Cold Strip Mill Entrance Road
D	3250	16	5778	Plant Center Road–Wide berms at indicated places

Unpaved Roads, Areas and Wide Berms

Road Section	Length (feet)	Width (feet)	Area (sq. yds)	Description
D	1584	8	1408	Plant Center Road–Wide berms at indicated places
E	288	16	512	Small Unpaved Roads from Center Road
F	215	140	3344	West Parking Lot
G	315	95	3325	East Parking Lot
H	5280	30	17600	Open Hearth–Hot Strip Mill Road
J	1056	30	3520	Strip Mill Road–Two 15' Lanes

Attachment 1 Continued

Table 3: Initial Application of Chemical Dust Suppressant at the Wheeling-Pittsburgh Steel Corporation Steubenville North Facility

Wheeling Pittsburgh Steel Corporation, Steubenville
Dust Suppressant Initial Application

Mixture = 1 part Chemical
5 part Water

Application Intensity = 1 gal./yd.**2

Road Section	Area (sq.yds.)	Chemical (gal./appl.)	Mixture (gal./appl.)	Application Frequency	Initial Application (gal.)	
					Chemical	Mixture
D	1,408	235	1,408	1	235	1,408
E	512	85	512	3	256	1,536
F	3,344	557	3,344	2	1,115	6,688
G	3,325	554	3,325	2	1,108	6,650
H	17,600	2,933	17,600	2	5,867	35,200
J	3,520	587	3,520	2	1,173	7,040
Total gal./application =		4,952	29,709	gal/inital ap	9,754	58,522

Attachment 1 Continued

Table 4: Follow-up Applications of Chemical Dust Suppressant at the Wheeling-Pittsburgh Steel Corporation Steubenville North Facility Based on a 52 Week/Year Season

Mixture = 1 part Chemical
7 part Water

Application Intensity= 0.5 gal./yd.**2

Road Section	Area (sq.yds.)	Chemical (gal./appl.)	Mixture (gal./appl.)	Application Frequency	Yearly Totals (gal.)	
					Chemical	Mixture
D	1,408	88	704	4 /yr.-Quarterly application	352	2,816
E	512	32	256	17 /yr.-Tri-weekly application	544	4,352
F	3,344	209	1,672	12 /yr.-Monthly application	2,508	20,064
G	3,325	208	1,663	12 /yr.-Monthly application	2,494	19,950
H	17,600	1,100	8,800	12 /yr.-Monthly application	13,200	105,600
J	3,520	220	1,760	12 /yr.-Monthly application	2,640	21,120
Total gal./application 0		1857	14855	Total gal./yr. =	21,738	173,902

Attachment 1 Continued

Figure 2: Layout of the Roads at Mingo Junction South Plant

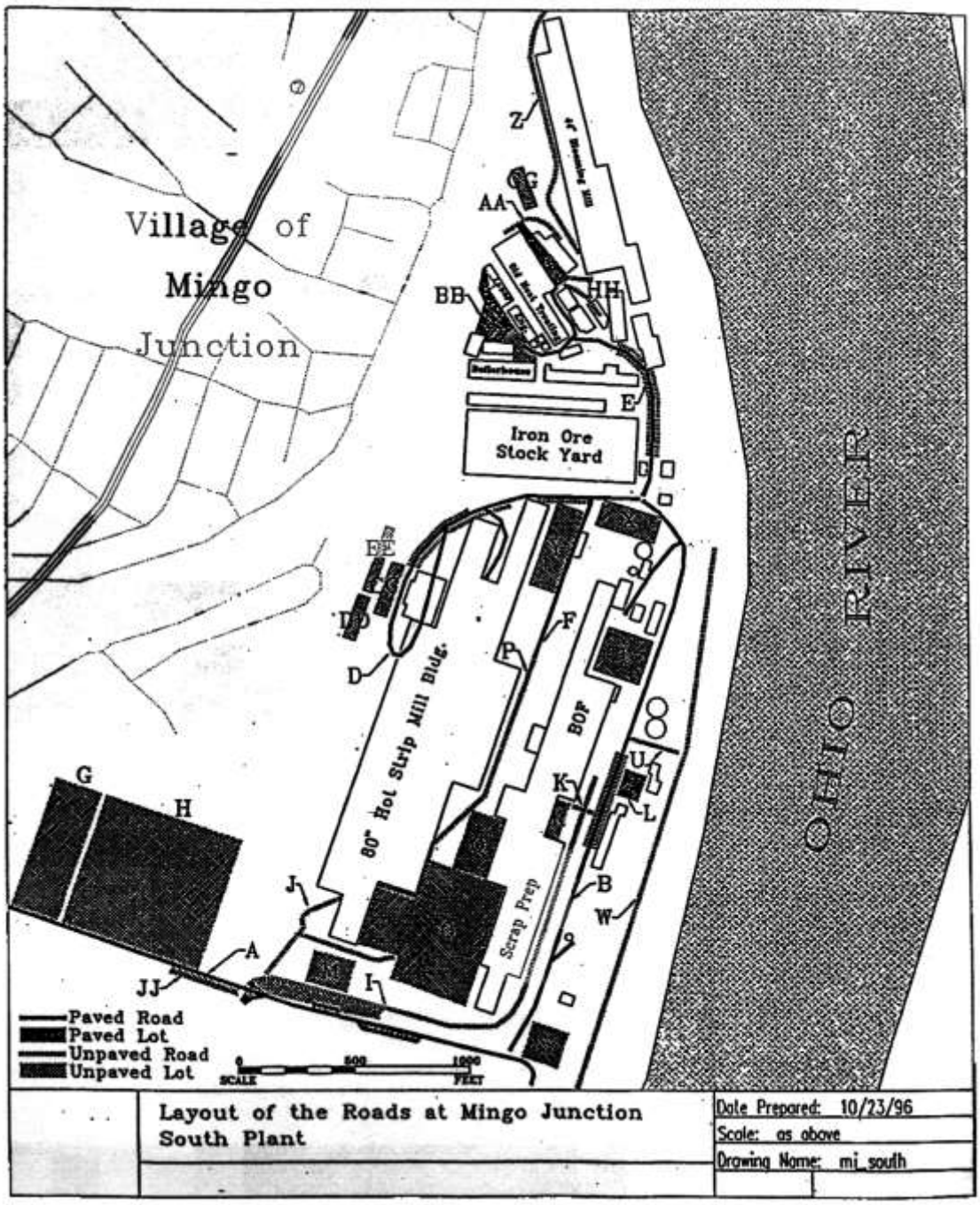

Attachment 1 Continued

Tables 5 and 6: Wheeling Pittsburgh Steel Corporation, Mingo Junction
Mingo Junction South Plant Roads

Paved Roads

Road Section	Length (feet)	Width (feet)	Area (sq. yds)	Description
A	2,700	25	7,500	Entrance Road
B	1,165	16	2,071	BOF–Scrap Handling Road
D	1,800	16	3,200	80" Hot Strip Mill Road
E	900	16	1,600	Blast Furnace–Labor Office Road
F	375	16	667	Center Road Section
BB	600	16	1,067	Office Road
HH	700	15	1,167	Fork Truck Road, paved section

Unpaved Roads, Areas and Wide Berms

Road Section	Length (feet)	Width (feet)	Area (sq. yds)	Description
B	980	6	653	Scrap Handling Road Berms
D	1,650	6	1,100	80" Hot Strip Mill Road Wide Berms
E	590	8	524	BF–Labor Ofc. Road Berms
G	600	200	13,333	Truck Turnaround Area
H	650	600	43,333	Main Parking Lot
I	2,630	40	11,689	Slag Haul Road & Berms
J	513	30	1,710	Strip Mill Road
K	80	20	178	Caster Access Road
M	138	180	2,760	Strip Mill Area
O	2,340	12	3,120	Slab Laydown
P	1,614	12	2,152	Middle Road
Q	175	75	1,458	Lab Parking
R	170	60	1,133	BOF 4 Parking
S	160	160	2,844	IMS Corner
T	200	200	4,444	Lime Area
U	225	15	375	Short Road
W	2,700	12	3,600	River Road
X	260	115	3,322	Used Machine Parts Storage Yard
Y	380	120	5,067	Cooling Tower Area
Z	1,070	20	2,378	44" Blooming Mill Road
AA	200	20	444	Old Heat Treat Road
CC	240	55	1,467	Coil Storage Yard
DD	200	50	1,111	State Street Parking Lot 1
EE	300	40	1,333	State Street Parking Lot 2
GG	185	55	1,131	44" Blooming Mill Storage Yard
HH	275	15	458	Fork Truck Road, Unpaved Section
JJ	300	30	1,000	Visitors' Parking Area

Attachment 1 Continued

Table 7: Initial Application of Chemical Dust Suppressant at the Wheeling-Pittsburg Steel Corporation Mingo Junction Facility

Mixture = 1 part Chemical
5 part Water

Application Intensity= 1 gal./yd.**2

Road Section	Area (sq.yds.)	Chemical (gal./appl.)	Mixture (gal./appl.)	Application Frequency	Initial Application (gal.)	
					Chemical	Mixture
B	653	109	653	1	109	653
D	1,100	183	1,100	1	183	1,100
E	524	87	524	1	87	524
G	13,333	2,222	13,333	1	2,222	13,333
H	9,285	1,547	9,285	3	4,642	27,855
I*	11,689	1,948	11,689	2	3,896	23,378
J	2,338	390	2,338	3	1,169	7,015
K	178	30	178	2	59	356
M	2,760	460	2,760	1	460	2,760
O	3,120	520	3,120	1	520	3,120
P	1,818	303	1,818	1	303	1,818
Q	1,458	243	1,458	2	486	2,917
R	1,133	189	1,133	2	378	2,267
S	2,844	474	2,844	3	1,422	8,533
T	4,444	741	4,444	3	2,222	13,333
U	375	63	375	3	188	1,125
W	3,600	600	3,600	3	1,800	10,800
X	3,322	554	3,322	1	554	3,322
Y	5,067	844	5,067	1	844	5,067
Z	2,378	396	2,378	3	1,189	7,133
AA	444	74	444	3	222	1,333
CC	1,467	244	1,467	1	244	1,467
DD	1,111	185	1,111	2	370	2,222
EE	1,333	222	1,333	2	444	2,667
GG	1,131	188	1,131	1	188	1,131
HH	458	76	458	3	229	1,375
JJ	1,000	167	1,000	2	333	2,000
Total gal./application		12,952	77,712	gal/initial appl	24,658	147,950

* This road is treated as a paved road supplemented with chemical dust suppressant.

Attachment 1 Continued

Table 8: Follow-up Application of Chemical Dust Suppressant at the Wheeling-Pittsburgh Steel Corporation Mingo Junction Facility
Based on 52 Week/Year Season During Initial Year

Mixture = 1 part Chemical
7 part Water

Application Intensity= 0.5 gal./yd.**2

Road Section	Area (sq.yds.)	Chemical (gal./appl.)	Mixture (gal./appl.)	Application Frequency	Yearly Totals (gal.)	
					Chemical	Mixture
B	653	41	327	4 /yr.–Quarterly application	163	1,307
D	1,100	69	550	4 /yr.–Quarterly application	275	2,200
E	524	33	262	4 /yr.–Quarterly application	131	1,049
G	13,333	833	6,667	4 /yr.–Quarterly application	3,333	26,667
H	9,285	580	4,642	4 /yr.–Quarterly application	2,321	18,570
I*	11,689	731	5,844	4 /yr.–Quarterly application	2,922	23,378
J	2,338	146	1,169	15 /yr.–24 day application	2,192	17,538
K	178	11	89	15 /yr.–24 day application	167	1,333
M	2,760	173	1,380	15 /yr.–24 day application	2,588	20,700
O	3,120	195	1,560	15 /yr.–24 day application	2,925	23,400
P	1,818	114	909	15 /yr.–24 day application	1,704	13,632
Q	1,458	91	729	4 /yr.–Quarterly application	365	2,917
R	1,133	71	567	4 /yr.–Quarterly application	283	2,267
S	2,844	178	1,422	15 /yr.–24 day application	2,667	21,333
T	4,444	278	2,222	15 /yr.–24 day application	4,167	33,333
U	375	23	188	12 /yr.–Monthly application	281	2,250
W	3,600	225	1,800	12 /yr.–Monthly application	2,700	21,600
X	3,322	208	1,661	4 /yr.–Quarterly application	831	6,644
Y	5,067	317	2,533	4 /yr.–Quarterly application	1,267	10,133
Z	2,378	149	1,189	15 /yr.–24 day application	2,229	17,833
AA	444	28	222	12 /yr.–Monthly application	333	2,667
CC	1,467	92	733	4 /yr.–Quarterly application	367	2,933
DD	1,111	69	556	4 /yr.–Quarterly application	278	2,222
EE	1,333	83	667	12 /yr.–Monthly application	1,000	8,000
GG	1,131	71	565	12 /yr.–Monthly application	848	6,783
HH	458	29	229	4 /yr.–Quarterly application	115	917
JJ	1,000	63	500	15 /yr.–24 day application	938	7,500
Total gal./application=		4,898	39,183	Total gal./yr. =	37,388	299,106

* This road is treated as a paved road supplemented with chemical dust suppressant.

Attachment 1 Continued

Table 9 and 10: Control Efficiencies for On-going Control Programs

Control Efficiencies for Monthly Applications				
Averaging Period	Application Concentration	Ground Inventory (gal/yd^2 chemical) at start of period	1-Month Average Control Efficiency from EPA-450/3-88-008 Figure 3-4 (%)	Running Average Control Efficiency (%)
Jan 1–Feb 1	1.00 gal/yd^2 of 1.6 solution	0.143	78	78
Feb 1–Mar 1	0.50 gal/yd^2 of 1: 12 solution	0.181	84	81
Mar 1–Apr 1	0.50 gal/yd^2 of 1: 12 solution	0.220	89	84
Apr 1–May 1	0.50 gal/yd^2 of 1: 12 solution	0.258	90	85
May 1–Jun 1	0.50 gal/yd^2 of 1: 12 solution	0.297	90	86
Jun 1–Jul 1	0.50 gal/yd^2 of 1: 12 solution	0.335	90	87
Jul 1–Aug 1	0.50 gal/yd^2 of 1: 12 solution	0.374	90	87
Aug 1–Sep 1	0.50 gal/yd^2 of 1: 12 solution	0.412	90	88
Sep 1–Oct 1	0.50 gal/yd^2 of 1: 12 solution	0.451	90	88
Oct 1–Nov 1	0.50 gal/yd^2 of 1: 12 solution	0.489	90	88
Nov 1–Dec 1	0.50 gal/yd^2 of 1: 12 solution	0.527	90	88
Dec 1–Jan 1	0.50 gal/yd^2 of 1: 12 solution	0.566	90	89

Control Efficiencies for Bimonthly Applications				
Averaging Period	Application Concentration	Ground Inventory (gal/yd^2 chemical) at start of period	2-Month Average Control Efficiency from EPA-450/3-88-008 & MECH@X@Y (%)	Running Average Control Efficiency (%)
Jan 1–Mar 1	1.00 gal/yd^2 of 1.6 solution	0.143	58	58
Mar 1–May 1	0.50 gal/yd^2 of 1: 12 solution	0.181	62	60
May 1–Jul 1	0.50 gal/yd^2 of 1: 12 solution	0.220	67	62
Jul 1–Sep 1	0.50 gal/yd^2 of 1: 12 solution	0.258	67	64
Sep 1–Nov 1	0.50 gal/yd^2 of 1: 12 solution	0.297	67	64
Nov 1–Jan 1	0.50 gal/yd^2 of 1: 12 solution	0.335	67	65

Attachment 1 Continued

Table 11: Chemical Applications for On-going Programs Based on "Control of Open Fugitive Dust Sources"

Road	Description	Daily Vehicle Passes[1] A	B	C	D	Total	Length (mi)	VMT /day	Speed (mph)	Avg. No. Wheels	Avg. Weight (Tons)	Application Frequency	Worst Case Uncontrolled PM10 (g/s)	Control Efficiency (%)	Controlled PM10 (g/s) Worst Case	Annual
	SOUTH PLANT															
B	Scrap Handling Road Berms	7	3	11		21	0.1856	3.90	5	8	24	Bimonthly	2.602597E-02	65	9.176779E-03	5.067222E-03
D	80" Hot Strip Mill Road Wide Berms	2		6		8	0.3125	2.50	5	9	31	Bimonthly	2.125125E-02	65	7.493210E-03	4.137591E-03
E	BF - Labor Office Road Berms	56				56	0.1117	6.26	5	4	2	Bimonthly	5.194226E-03	65	1.831489E-03	1.011309E-03
G	Scrap Handling Road Berms	229				229	0.1136	26.01	5	4	2	Bimonthly	2.159377E-02	65	7.613984E-03	4.204279E-03
H	80" Hot Strip Mill Road Wide Berms	213	34			247	0.0609	15.04	5	3	4	Bimonthly	1.691390E-02	65	5.963857E-03	3.293115E-03
J	Strip Mill Road				84	84	0.1329	11.16	5	4	92	Monthly	1.351196E-01	89	1.551779E-02	8.568593E-03
K	Caster Access Road		13	114	3	130	0.0151	1.97	5	11	37	Monthly	2.065485E-02	89	2.372103E-03	1.309825E-03
M	Strip Mill Area [3]				12	12	0.0261	0.31	15	4	92	Monthly	1.139181E-02	89	1.308291E-03	7.224106E-04
O	Slab Laydown [3]				72	72	0.1108	7.98	5	4	92	Monthly	9.658277E-02	89	1.109204E-02	6.124786E-03
P	Center Road Section [2]	44				44	0.2582	11.36	15	4	2	Bimonthly	2.829078E-02	65	9.975354E-03	5.508177E-03
Q	Lab Parking [2]	20				20	0.0331	0.66	5	4	2	Bimonthly	5.502358E-04	65	1.940136E-04	1.071302E-04
R	BOF 4 Parking [2]	66	30			96	0.0322	3.09	5	5	6	Bimonthly	6.195263E-03	65	2.184455E-03	1.206210E-03
S	IMS Corner	273	46	229		548	0.0303	16.61	15	7	19	Monthly	2.675367E-01	89	3.072522E-02	1.696581E-02
T	Line Area	7		86		93	0.0379	3.52	15	10	37	Monthly	1.097210E-01	89	1.260089E-02	6.957943E-03
U	Short Road	2				2	0.0426	0.09	15	4	2	Monthly	2.122338E-04	89	2.437397E-05	1.345878E-05
W	River Road	2				2	0.5114	1.02	15	4	2	Bimonthly	2.546806E-03	65	8.980060E-04	4.958597E-04
X	Used Machine Parts Storage Yard [2]	10	5			15	0.0492	0.74	5	5	6	Bimonthly	1.538109E-03	65	5.416335E-04	2.990784E-04
Y	Cooling Tower Area [2]	15	8			23	0.0720	1.66	5	5	7	Monthly	3.529074E-03	89	4.052960E-04	2.237958E-04
Z	44" Blooming Mill Road	9				9	0.2027	1.82	15	4	2	Monthly	4.541803E-03	89	5.216029E-04	2.880180E-04
AA	Old Heat Treat Road	18				18	0.0379	0.68	15	4	2	Bimonthly	1.698821E-03	65	5.990059E-04	3.307583E-04
CC	Cold Storage Yard [2]	5				5	0.0455	0.23	5	4	2	Bimonthly	1.886523E-04	65	6.651896E-05	3.673035E-05
DD	State Street Parking Lot 1 [4]	20				20	0.0379	0.75	5	4	2	Monthly	6.288409E-04	89	7.221916E-05	3.987788E-05
EE	State Street Parking Lot 2 [4]	30				30	0.0568	1.70	5	4	2	Monthly	1.414892E-03	89	1.624931E-04	8.972523E-05
GG	44" Blooming Mill Storage Yard [2]	18				18	0.0350	0.63	5	4	2	Bimonthly	5.235101E-04	65	1.845901E-04	1.019267E-04
HH	Fork Truck Road, Unpaved Section	27				27	0.0521	1.41	15	4	2	Monthly	3.501858E-03	89	4.021705E-04	2.220699E-04
JJ	Visitors' Parking Area [2]	60	12			72	0.0568	4.09	5	5	4	Monthly	6.020630E-03	89	6.914386E-04	3.817976E-04
													7.933652E-01		1.226188E-01	6.770749E-02
	NORTH PLANT															
D	Plant Center Road Wide Berms	35				35	0.3000	10.50	5	4	2	Bimonthly	8.715735E-03	65	3.073176E-03	1.696942E-03
E	Small Unpaved Roads from Center Road	27	30			57	0.0545	3.11	15	6	9	Monthly	2.588115E-02	89	2.972317E-03	1.641250E-03
F	West Parking Lot	100				100	0.0407	4.07	5	4	2	Monthly	3.380020E-03	89	3.881780E-04	2.143436E-04
G	East Parking Lot	120				120	0.0597	7.16	5	4	2	Monthly	5.942547E-03	89	6.824711E-04	3.768460E-04
H	Open Hearth-Hot Strip Mill Road	2	5			7	1.0000	7.00	15	6	11	Monthly	7.253349E-02	89	6.330100E-03	4.599703E-03
J	Strip Mill Road - Two 15" Lanes	2	5			7	0.2000	1.40	15	6	11	Monthly	1.450670E-02	89	1.666020E-03	9.199407E-04
													1.309596E-01		1.711226E-02	9.449026E-03

1. Vehicle types and specifications are as follows:

Type	Weight (tons)	Wheels
A	2	4
B	15	7
C	40	11
D	55 empty 130 full	4

2. Parking lot traffic is based on Daily Vehicle Passes of nearest road.
3. Type D vehicles (slab handlers) travel these areas only.
4. Capacity estimated by size.

153 Mean Annual Days With Rain
347 Working Days per Year
Bimonthly means every two months.

3745-17-14 **Contingency plan requirements for Cuyahoga and Jefferson counties.**

(A) By not later than April 1, 1992, the owner or operator of each facility identified below shall submit to the Ohio EPA approvable control strategies and compliance schedules which meet the following requirements:

(1) The control strategies shall be capable of reducing the particulate emissions from each of the facilities identified below by each of the two levels specified below for each facility:

--

Facility Name (premise number)	Total, required particulate emission reductions for the facility (in pounds per hour at the maximum operating rates)	
	Fifteen per cent reduction level	Twenty-five per cent reduction level
Ford Motor Company (1318120180)	5.7	9.5
United Ready Mix (1318005960)	1.1	1.1
International Mill Service, Incorporated (1741090068)	0.8	0.8
Luria Brothers (1318122776)	4.6	6.7
T & B Foundry Company (1318000504)	1.7	2.8

(2) Except as otherwise provided in this paragraph, the particulate emission reductions specified in paragraph (A)(1) of this rule shall be obtained from the sources identified for each affected facility in rules 3745-17-12 and 3745-17-13 of the Administrative Code. If the required reductions cannot reasonably be obtained from those sources, control strategies may be developed for other sources at the facility in order to meet the required reductions for the facility.

(3) In calculating the control strategy, hourly particulate emission rate for a source, the maximum operating rate for the source shall be used. In addition, for a source identified in rule 3745-17-12 or 3745-17-13 of the Administrative Code, the baseline, hourly particulate emission rate shall be based upon the allowable emission rate specified in those rules and the maximum operating rate; and the control strategy must be designed to reduce the particulate emissions below that baseline, hourly particulate emission rate. For a source which is not identified in rule 3745-17-12 or 3745-17-13 of the Administrative Code, the baseline, hourly particulate emission rate shall be based upon the actual or allowable emission rate, whichever is lower, and the maximum operating rate; and the control strategy must be designed to reduce the particulate emissions below that baseline, hourly particulate emission rate.

(4) The following information shall be submitted for each source for which a control strategy is developed:

(a) A description of the source and the existing control equipment and/or control measures;

(b) The Ohio EPA application number;

(c) The hourly, baseline particulate emission rate, and the assumptions and calculations which were used to derive the emission rate;

(d) A description of the type of control equipment and/or control measures which will be employed to reduce the hourly emission rate, including the general design specifications and/or operating parameters;

(e) The hourly particulate emission rate that will be achieved by employing the proposed control equipment and/or control measures, and the assumptions and calculations which were used to derive the emission rate; and

(f) The approximate total installed cost and annual operating cost for the proposed control equipment and/or control measures, and the assumptions and calculations which were used to derive the costs.

(5) The schedule for implementing each control strategy shall commence upon a formal determination and notification by the Ohio EPA or the United States environmental protection agency that the county where the facility is located is not in compliance with the ambient air quality standards for PM_{10}, as specified in rule 3745-25-02 of the Administrative Code. The schedule shall include dates for the following milestones:

(a) Award contracts for emission control systems or process modifications, or issue orders for the purchase of component parts to accomplish emission control or process modification.

(b) Initiate on-site construction or installation of emission control equipment or process change.

(c) Complete on-site construction or installation of emission control equipment or process change.

(d) Achieve final compliance.

The owner or operator shall demonstrate to the satisfaction of the director that the schedule is as expeditious as practicable.

(B) The control strategies and compliance schedules submitted in accordance with paragraph (A) of this rule shall be approved by the director through the issuance, pursuant to division (R) of section 3704.03 of the Ohio Revised Code, of

administrative findings and orders. The findings and orders shall be submitted to and approved by the United States environmental protection agency as a revision to the Ohio state implementation plan for particulates.

(C) Upon a formal determination and notification by the Ohio EPA or the United States environmental protection agency that Cuyahoga county or Jefferson county is not in compliance with the ambient air quality standards for PM_{10}, as specified in rule 3745-25-02 of the Administrative Code, the owner or operator of each facility identified in paragraph (A)(1) of this rule shall implement the control strategies and schedules which have been approved by the director. (Such formal determination and notification of nonattainment shall not occur prior to January 1, 1994.) If the determination and notification of nonattainment are based upon a twenty-four-hour average ambient air concentration of PM_{10} of greater than one hundred fifty micrograms per cubic meter and less than or equal to one hundred seventy-two and one half micrograms per cubic meter, the owner or operator of each affected facility shall implement the set of approved control strategies and compliance schedules which are designed to reduce the hourly particulate emission rate by fifteen per cent or more. If the determination and notification of nonattainment are based upon a twenty-four-hour average ambient air concentration of PM_{10} of greater than one hundred seventy-two and one half micrograms per cubic meter, the owner or operator of each affected facility shall implement the approved control strategies and compliance schedules which are designed to reduce the hourly particulate emission rate by twenty-five per cent or more.

(D) Notwithstanding the requirements of paragraph (C) of this rule, if the determination and notification of nonattainment referenced in paragraph (C) of this rule reflects continued nonattainment in only a portion of the county, the director may limit the requirement for implementation of contingency measures to those facilities which are identified in paragraph (A)(1) of this rule and which are located either in that portion of Jefferson County within a two-kilometer radius from the ambient air quality monitor(s) showing continued nonattainment or in that portion of Cuyahoga County within a three-kilometer radius from the ambient air quality monitor(s) showing continued nonattainment.

(E) For purposes of this rule, PM_{10} shall be defined and determined in accordance with paragraph (B)(16) of rule 3745-17-01 of the Administrative Code.

Effective: 04/18/2009

R.C. 119.032 review dates: 02/01/2013

CERTIFIED ELECTRONICALLY
Certification

04/08/2009
Date

Promulgated Under: 119.03
Statutory Authority: 3704.03(E)
Rule Amplifies: 3704.03(A), 3704.03(E)
Prior Effective Dates: 6/14/91, 12/6/91, 11/15/95, 1/31/98, 2/1/08

Chapter 3745-18: Sulfur Dioxide Regulations

Contact: Jennifer Van Vlerah 614-644-3696
Jennifer.VanVlerah@epa.ohio.gov

3745-18-01 **Definitions and incorporation by reference.**

(A) Except as otherwise provided in paragraph (B) of this rule, the definitions in rule 3745-15-01 of the Administrative Code shall apply to this chapter.

(B) The following definitions shall apply exclusively to this chapter:

(1) "By-product coke oven gas" means the gas produced during the production of metallurgical coke in slot-type, by-product coke ovens.

(2) "Calendar day" means the period of twenty-four hours from midnight to midnight.

(3) "First quarter" means calendar January, February and March.

(4) "Fuel burning equipment" or "fossil fuel fired steam generator" means any furnace, boiler, apparatus, stack, and all appurtenances thereto, used in the process of burning fuel for the primary purpose of producing heat or power by indirect heat transfer.

(5) "Fossil fuel" means natural gas, coke oven gas, petroleum, coal and any form of solid, liquid, or gaseous fuel derived from such materials.

(6) "Fourth quarter" means calendar October, November and December.

(7) "Incinerator" means any equipment, machine, device, article, contrivance, structure, or part of a structure used to burn refuse or to process refuse material by burning other than by open burning.

(8) "MM Btu" means million(s) of British thermal units.

(9) "Natural gas" means a naturally occurring mixture of hydrocarbon and nonhydrocarbon gases found in geologic formations beneath the earth's surface, of which the principal constituent is methane.

(10) "Owner or operator" means any person who owns, leases, operates, controls, or supervises a facility, building, structure, or installation which directly or indirectly results or may result in emissions of sulfur dioxide.

(11) "OEPA" means the Ohio environmental protection agency.

(12) "Primary zinc smelter" means any installation engaged in the production of zinc or zinc oxide from zinc sulfide ore concentrates through the use of pyrometallurgical techniques.

(13) "Process" means any source operation including any equipment, devices, or contrivances and all appurtenances thereto, for changing any material whatever or for storage or handling of any material, the use of which may cause the discharge of an air contaminant into the open air, but not including that equipment defined as a fossil fuel fired steam generator.

(14) "Process weight" means the total weight of all materials introduced into the source operation including solid fuels, but excluding gaseous fuels and liquid fuels when they are used solely as fuels and excluding air introduced for the purpose of combustion.

(15) "Rated capacity" or "rated heat input capacity" means the maximum capacity guaranteed by the equipment manufacturer or the maximum normally achieved during use as determined by the director, whichever is greater.

(16) "Run" means the net period of time during which an emission sample is collected. Unless otherwise specified, a run may be either intermittent or continuous within the limits of good engineering practice as determined by the director.

(17) "Second quarter" means calendar April, May and June.

(18) "Stationary gas turbine" means an engine in which a turbine is driven by expanding hot combustion gases. Such an engine typically consists of an axial-flow air compressor, one or more combustion chambers, and the turbine.

(19) "Stationary internal combustion engine" means a stationary engine in which combustion occurs within one or more cylinders, converting heat energy into mechanical energy, which in turn drives an electric generator or other mechanical equipment.

(20) "Sulfur recovery plant" means any plant that recovers elemental sulfur from any gas stream.

(21) "Sulfuric acid production unit" means any facility producing sulfuric acid by the contact process by burning elemental sulfur, alkylation acid, hydrogen sulfide, organic sulfides and mercaptans, or acid sludge.

(22) "Third quarter" means calendar July, August and September.

(23) "Total rated capacity" means the sum of the rated capacities of all fuel burning equipment connected to a common stack.

(C) Referenced materials. This chapter includes references to certain matter or materials. The text of the referenced materials is not included in the rules contained in this chapter. Information on the availability of the referenced materials as well as the date of, and/or the particular edition or version of the material is included in this rule. For materials subject to change, only the specific versions specified in this rule are

referenced. Material is referenced as it exists on the effective date of this rule. Except for subsequent annual publication of existing (unmodified) Code of Federal Regulation compilations, any amendment or revision to a referenced document is not applicable unless and until this rule has been amended to specify the new dates.

(1) Availability. The referenced materials are available as follows:

(a) Code of Federal Regulations (CFR). Information and copies may be obtained by writing to: "Superintendent of Documents, Attn: New Orders, PO Box 371954, Pittsburgh, PA 15250-7954." The full text of the CFR is also available in electronic format at www.access.gpo.gov//ecfr/. The CFR compilations are also available for inspection and copying at most public libraries and "The State Library of Ohio."

(b) "American Society for Testing and Materials (ASTM)." Information and copies may be obtained by writing to: "ASTM International, 100 Bar Harbor Drive, P.O. Box C700, West Conshohocken, Pennsylvania 19426-2959." These documents are available for purchase at www.astm.org. ASTM documents are also generally available at local public libraries and "The State Library of Ohio."

(2) Referenced materials:

(a) 40 CFR 52.1881; "Control strategy: Sulfur oxides (sulfur dioxide);" as published in the July 1, 2010 Code of Federal Regulations.

(b) 40 CFR 60.45; "Subpart 'D' -- Standards of Performance for Fossil-Fuel-Fired Steam Generators for Which Construction is Commenced After August 17, 1971, Emission and Fuel Monitoring;" 40 FR 46256, Oct. 6, 1975 as amended at 65 FR 61752, Oct. 17, 2000.

(c) 40 CFR 60.46; "Subpart 'D' -- Standards of Performance for Fossil-Fuel-Fired Steam Generators for Which Construction is Commenced After August 17, 1971, Test Methods and Procedures;" 54 FR 6662, Feb. 14, 1989; 54 FR 21344, May 17, 1989, as amended at 55 FR 5212, Feb. 14, 1990; 65 FR 61752, Oct. 17, 2000.

(d) 40 CFR 60.47a; "Subpart 'Da' -- Standards of Performance for Electric Utility Steam Generating Units for Which Construction Commenced After September 18, 1978, Emission Monitoring;" 44 FR 33613, June 11, 1979, as amended at 54 FR 6664, Feb. 14, 1989; 55 FR 5212, Feb. 14, 1990; 55 FR 18876, May 7, 1990; 63 FR 49454, Sept. 16, 1998; 65 FR 61752, Oct. 17, 2000; 66 FR 18553, Apr. 10, 2001.

(e) 40 CFR 60.47b; "Subpart 'Db' -- Standards of Performance for Industrial - Commercial - Institutional Steam Generating Units, Emission Monitoring for Sulfur Dioxide;" 52 FR 47842, Dec. 16, 1987, as amended at 54 FR

51820, Dec. 18, 1989; 55 FR 5212, Feb. 14, 1990; 55 FR 18876, May 7, 1990.

(f) 40 CFR 60.47c; "Subpart 'Dc' -- Standards of Performance for Small Industrial - Commercial - Institutional Steam Generating Units, Emission Monitoring for Sulfur Dioxide;" 55 FR 37683, Sept. 12, 1990, as amended at 65 FR 61753, Oct. 17, 2000.

(g) 40 CFR 60.85; "Subpart 'H' -- Standards of Performance for Sulfuric Acid Plants, Test Methods and Procedures;" 54 FR 6666, Feb. 14, 1989.

(h) 40 CFR Part 50, Appendix A; "Reference Method for the Determination of Sulfur Dioxide in the Atmosphere (Pararosaniline Method;" 47 FR 54899, Dec. 6, 1982; 48 FR 17355, Apr. 22, 1983.

(i) 40 CFR Part 53; "Ambient Air Monitoring Reference and Equivalent Methods;" as published in the July 1, 2010 Code of Federal Regulations.

(j) 40 CFR Part 60; "Standards of Performance for New Stationary Sources;" as published in the July 1, 2010 Code of Federal Regulations.

(k) 40 CFR Part 60, Appendix F; "Quality Assurance Procedures;" as published in the July 1, 2010 Code of Federal Regulations.

(l) 40 CFR Part 60, Subpart J; "Standards of Performance for Petroleum Refineries;" as published in the July 1, 2010 Code of Federal Regulations.

(m) Method 1; contained in 40 CFR Part 60, Appendix A; "Sample and Velocity Traverses for Stationary Sources;" as published in the July 1, 2010 Code of Federal Regulations.

(n) Method 2; contained in 40 CFR Part 60, Appendix A; "Determination of Stack Gas Velocity and Volumetric Flow Rate (Type 'S' Pitot Tube);" as published in the July 1, 2010 Code of Federal regulations.

(o) Method 3; contained in 40 CFR Part 60, Appendix A; "Gas Analysis for the Determination of Dry Molecular Weight;" as published in the July 1, 2010 Code of Federal Regulations.

(p) Method 4; contained in 40 CFR Part 60, Appendix A; "Determination of Moisture Content in Stack Gases;" as published in the July 1, 2010 Code of Federal Regulations.

(q) Method 6; contained in 40 CFR Part 60, Appendix A; "Determination of Sulfur Dioxide Emissions from Stationary Sources;" as published in the July 1, 2010 Code of Federal Regulations.

(r) Method 6A; contained in 40 CFR Part 60, Appendix A; "Determination of Sulfur Dioxide, Moisture, and Carbon Dioxide from Fuel Combustion Sources;" as published in the July 1, 2010 Code of Federal Regulations.

(s) Method 6B; contained in 40 CFR Part 60, Appendix A; "Determination of Sulfur Dioxide and Carbon Dioxide Daily Average Emissions from Fossil Fuel Combustion Sources;" as published in the July 1, 2010 Code of Federal Regulations.

(t) Method 6C; contained in 40 CFR Part 60, Appendix A; "Determination of Sulfur Dioxide Emissions from Stationary Sources (Instrumental Analyzer Procedure);" as published in the July 1, 2010 Code of Federal Regulations.

(u) Method 19; contained in 40 CFR Part 60, Appendix A; "Determination of Sulfur Dioxide Removal Efficiency and Particulate Matter, Sulfur Dioxide, and Nitrogen Dioxide Emission Rates;" as published in the July 1, 2010 Code of Federal Regulations.

(v) Performance Specification 2; contained in of 40 CFR Part 60, Appendix B; "Specifications and Test Procedures for Sulfur Dioxide and Nitric Oxides Continuous Emission Monitoring Systems in Stationary Sources;" as published in the July 1, 2010 Code of Federal Regulations.

Effective: 04/03/2011

R.C. 119.032 review dates: 11/30/2010 and 11/30/2015

CERTIFIED ELECTRONICALLY
Certification

03/24/2011
Date

Promulgated Under: 119.03
Statutory Authority: 3704.03(E)
Rule Amplifies: 3704.03(A), 3704.03(E)
Prior Effective Dates: 12/28/79, 5/11/87, 9/01/03, 1/23/06

3745-18-02 **Ambient air quality standards; sulfur dioxide.**

This rule was rescinded as of 4/18/09.

The rule language was moved to OAC Rule 3745-25-02

3745-18-03 **Compliance time schedules.**

(A) [Reserved]

(B) Certification and permit application requirements.

(1) Except as otherwise provided in paragraph (B)(2) and paragraphs (B)(4) to (B)(8) of this rule, no later than December 1, 1979, any owner or operator of any sulfur dioxide emissions source subject to, and not specifically exempted from, rules 3745-18-06 to 3745-18-94 of the Administrative Code shall either:

(a) Certify in writing to the director that such source is in full compliance with all requirements of this chapter. Such certification shall include: equipment description, OEPA permit application number (if assigned), and all necessary data (consistent with the appropriate permit application appendices) and calculations which confirm the compliance status. The certification shall also include an application for a permit-to-operate such source in accordance with rule 3745-35-02 of the Administrative Code if such source does not possess an effective permit; or

(b) Submit an application for a permit-to-operate or an application for a modification to a permit-to-operate in accordance with rule 3745-35-02 of the Administrative Code. Such application shall include a compliance program which will bring the source into full compliance with all the requirements of this chapter as expeditiously as practicable but in no event later than the dates specified in paragraph (C) of this rule, and identify all reasonable interim control measures.

(2) No later than December 1, 1979, any owner or operator of any sulfur dioxide emissions source subject to, and not specifically exempted from, rule 3745-18-56 of the Administrative Code (Mahoning county) shall certify in writing to the director, in a form and manner the director shall specify, all data necessary to establish sulfur dioxide emission limitations based on calendar year 1978 operations.

(3) For fuel burning equipment, the certification and/or permit applications required by paragraphs (B)(1) and (B)(2) of this rule shall include the test method for determining compliance as specified in paragraph (D) or (E) of rule 3745-18-04 of the Administrative Code, whichever is applicable.

(4) No later than December 1, 1984, the "United States Steel Corporation, Lorain-Cuyahoga Works" (OEPA premise number 0247080229), shall submit an application for a permit-to-operate or an application for a modification to a permit-to-operate in accordance with rule 3745-35-02 of the Administrative Code, which application shall include a compliance program which will bring

the source into full compliance with all the requirements of paragraphs (E)(5) and (E)(6) of rule 3745-18-53 of the Administrative Code as expeditiously as practicable but in no event later than the date specified in paragraph (C)(5) of this rule, and identify all reasonable interim control measures.

(5) [Reserved]

(6) No later than July 15, 1989, any owner or operator of the "LTV Steel Company" (OEPA premise numbers 1318000078 and 1318001613) shall:

(a) Submit a compliance program that will bring the facility into compliance with all the requirements of paragraphs (B) and (N) of rule 3745-18-24 of the Administrative Code as expeditiously as practicable, but in no event later than the date specified in paragraph (C)(7) of this rule; and

(b) Identify all reasonable interim control measures.

(7) No later than November 30, 1991, any owner or operator of any sulfur dioxide emissions source subject to, and not specifically exempted from, rule 3745-18-37 of the Administrative Code, Hamilton county emissions limits, shall:

(a) Submit a compliance program that will bring the source into full compliance with all the requirements of rule 3745-18-37 of the Administrative Code as expeditiously as practicable, but in no event later than December 22, 1993; and

(b) Identify all reasonable interim control measures.

(8) No later than April 20, 2000, any owner or operator of any sulfur dioxide emissions source subject to, and not specifically exempted from, rule 3745-18-15 of the Administrative Code, Butler county emissions limits, shall:

(a) Submit a compliance program that will bring the source into full compliance with all the requirements of rule 3745-18-15 of the Administrative Code as expeditiously as practicable, but in no event later than the date specified in paragraph (C)(6) of this rule; and

(b) Identify all reasonable interim control measures.

(C) Compliance time schedules.

(1) Except as otherwise provided in paragraphs (C)(2) to (C)(10) of this rule, no owner or operator shall cause, permit, or allow the operation or other use of any air contaminant source in violation of the limitations specified in rules 3745-18-06 to 3745-18-94 of the Administrative Code beyond August 27, 1979.

(2) No owner or operator shall cause, permit, or allow the operator or other use of any air contaminant source in violation of the limits specified in rules 3745-18-15 and 3745-18-83 of the Administrative Code beyond September 1, 1982.

(3) No owner or operator shall cause, permit, or allow the operation or other use of any air contaminant source at the following facilities in violation of the limitations specified in rules 3745-18-06 to 3745-18-94 of the Administrative Code beyond June 17, 1980:

(a) "Allied Chemical Corporation":

(i) [Reserved]

(ii) Lawrence county / South Point / OEPA premise number 0744000009;

(iii) Lawrence county / "Semet Solvay Ironton Tar Plant" / OEPA premise number 0744010002;

(b) "Aluminum Company of America": Cuyahoga county / "Cuyahoga Heights Facility" / OEPA premise number 1318170314.

(c) "Armco Steel Corporation": Muskingum county /"Zanesville Works" / OEPA premise number 0660010006.

(d) "Ashland Oil, Incorporated":

(i) Hancock county / "Findlay Plant" / OEPA premise number 0332010020;

(ii) Stark county / "Canton Plant" / OEPA premise number 1576000301.

(e) [Reserved]

(f) [Reserved]

(g) "Coulton Chemical Corporation": Lucas county / Oregon /OEPA premise number 1677010027.

(h) "E. I. duPont deNemours and Company":

(i) Cuyahoga county / Independence road, Cleveland /OEPA premise number 1318000151;

(ii) Hamilton county / "Fort Hill Plant" / OEPA premise number 1431350817;

(iii) Lucas county / Tremainsville road, Toledo / OEPA premise number 0448010058.

(i) "Federal Paper Board Company": Jefferson county / North Third street, Steubenville / OEPA premise number 1741050009.

(j) "General Motors Corporation":

(i) [Reserved]

(ii) Cuyahoga county / "Chevrolet Motor Division," Brookpark / OEPA premise number 1318451029;

(iii) Erie county / "New Departure-Hyatt" / OEPA premise number 0322020045;

(iv) Franklin county / "Fisher Body," Columbus / OEPA premise number 0125040057;

(v) [Reserved]

(vi) Lorain county / "Fisher Body," Elyria / OEPA premise number 1947040038;

(vii) [Reserved]

(viii) Montgomery county / "Inland Division" / OEPA premise number 0857040927;

(ix) Montgomery county / "Delco Air Conditioning" /OEPA premise number 0857100028;

(x) Richland county / "Fisher Body," Mansfield / OEPA premise number 0370000140;

(xi) Trumbull county / "Packard Electric," North River road / OEPA premise number 0278080051;

(xii) Trumbull county / "Packard Electric," Dana street /OEPA premise number 0278080052.

(k) "The Goodyear and Tire Rubber Company": Auglaize county / "St. Marys Facility" / OEPA premise number 0306010138.

(l) "The Gulf Oil Company":

(i) Hamilton county / Hooven / OEPA premise number 1431080082;

(ii) Lucas county / Front street / Toledo / OEPA premise number 0448010060.

(m) "The Hoover Company": Stark county / "Plant I" / OEPA premise number 1576170258.

(n) "Interlake Incorporated": Lucas county / Toledo / OEPA premise number 0448010397.

(o) "Koppers Company, Incorporated": Mahoning county /Youngstown / OEPA premise number 0250110146.

(p) "Ohio Greenhouse Association":

(i) Erie county / "Charles J. Otto Greenhouse" / Berlin township / OEPA premise number 0322000173;

(ii) Erie county / "Jacob H. Otto Greenhouse" / Huron /OEPA premise number 0322010174;

(iii) [Reserved]

(iv) Mahoning county / "Canfield Gardens" / OEPA premise number 0250030438.

(q) "Republic Steel Corporation":

(i) Cuyahoga county / 3100 East 45th street / OEPA premise number 1318001613;

(ii) Lake county / "Lime Plant" / OEPA premise number 0243030257;

(iii) Mahoning county / Youngstown / OEPA premise number 0250110464;

(iv) [Reserved]

(v) Stark county / "Union Drawn Division," Massillon /OEPA premise number 1576130697;

(vi) Stark county / "Central Alloy," Canton / OEPA premise number 1576050694;

(vii) Trumbull county / "Warren Township Facility" /OEPA premise number 0278080463.

(r) "Shell Oil Company":

(i) Allen county / "Lima Refinery" / OEPA premise number 0302020012;

(ii) Washington county / "Shell Chemical Corporation" / OEPA premise number 0684010011.

(s) "The Standard Oil Company":

(i) Allen county / "Lima Refinery" / OEPA premise number 0302020012;

(ii) Cuyahoga county / "Cleveland Asphalt Plant" /OEPA premise number 13180001871;

(iii) Lucas county / Oregon / OEPA premise number 0448020007.

(t) "The Sun Petroleum Products": Lucas county / "Oregon Facility" / OEPA premise number 044801010246.

(u) "The Timken Company":

(i) Crawford county / "Bucyrus Plant" / OEPA premise number 0317010168;

(ii) Stark county / "Canton Plant Number 5" / OEPA premise number 1576050614;

(iii) Stark county / "Canton Gambrinus Plant" / OEPA premise number 1576000613.

(v) "United States Steel Company":

(i) Ashtabula county / "Conneaut Plant" / OEPA premise number 0204020081;

(ii) Cuyahoga county / "Cuyahoga Works" / OEPA premise number 1318171623;

(iii) Cuyahoga county / "Lorain-Cuyahoga Works" /OEPA premise number 1318001622;

(iv) Lorain county / "Lorain-Cuyahoga Works" / OEPA premise number 1947080229;

(v) Mahoning county / "Youngstown Facilities" /OEPA premise number 0250110469;

(vi) Scioto county / "United States Steel Chemicals" /OEPA premise number 0773000080;

(vii) [Reserved]

(w) "Wheeling-Pittsburgh Steel Corporation":

(i) Belmont county / Martins Ferry / OEPA premise number 1707090013;

(ii) Jefferson county / "Mingo Junction Facility" /OEPA premise number 1741090010;

(iii) Jefferson county / "Yorkville Plant" / OEPA premise number 1741120012;

(x) "White-Westinghouse Corporation":

(i) Franklin county / "Columbus Products Company" /OEPA premise number 0125040258;

(ii) Richland county / "Mansfield Products" / OEPA premise number 0370010182.

(y) [Reserved]

(z) "Cardinal Operating Company and Buckeye Power, Incorporated": Jefferson county / "Cardinal Plant" / OEPA premise number 0641050002 and 1741050129.

(aa) "Cincinnati Gas and Electric Company":

(i) Clermont county / "Beckjord Station" / OEPA premise number 113100008;

(ii) Hamilton county / "Miami Fort Station" / OEPA premise number 1431350093.

(bb) "Cleveland Electric Illuminating Company":

(i) [Reserved]

(ii) Ashtabula county / "Ashtabula Plant" / OEPA premise number 0204010000;

(iii) Cuyahoga county / Canal road, "Steam Heat Plant" /OEPA premise number 1318000244;

(iv) Cuyahoga county / "Hamilton Avenue Steam Heat Plant" / OEPA premise number 1318000246;

(v) Cuyahoga county / "Lake Shore Plant" / OEPA premise number 1318000245;

(vi) Lake county / "Eastlake Plant" / OEPA premise number 0243160009;

(vii) Lorain county / "Avon Lake Plant" / OEPA premise number 1947030013.

(cc) "Columbus Southern Power Company":

(i) [Reserved]

(ii) Coshocton county / "Conesville Generating Station" / OEPA premise number 0616000000;

(iii) [Reserved]

(iv) Pickaway county / "/"Picway Power Plant" OEPA premise number 0165000006

(dd) "Dayton Power and Light Company":

(i) Adams county / "J.M. Stuart Station" / OEPA premise number 0701000007;

(ii) [Reserved]

(iii) [Reserved]

(iv) Montgomery county / "Tait Station" / OEPA premise number 0857100012;

(v) Montgomery county / "Hutching Station" / OEPA premise number 0857780013;

(vi) Montgomery county / "Yankee Station" / OEPA premise number 0857810015.

(ee) "Ohio Edison Company":

(i) Belmont county / "R. E. Burger Plant" / OEPA premise number 0607130015;

(ii) Clark county / "Mad River Plant" / OEPA premise number 0812790035;

(iii) [Reserved]

(iv) [Reserved]

(v) Huron county / "Norwalk Plant" / OEPA premise number 0339020181;

(vi) Jefferson county / "W. H. Sammis Plant" / OEPA premise number 041160017;

(vii) [Reserved]

(viii) Lorain county / "Edgewater Plant" / OEPA premise number 0247080049;

(ix) Lorain county / "West Lorain Plant" / OEPA premise number 0247080487;

(x) Trumbull county / "Niles Plant" / OEPA premise number 0278060023.

(ff) "Ohio Power Company":

(i) Allen county / "Woodcock Plant" / OEPA premise number 0302000010;

(ii) Gallia county / "Gavin Plant" / OEPA premise number 0627010056;

(iii) [Reserved]

(iv) Jefferson county / "Cardinal Plant" / OEPA premise number 0641050002;

(v) [Reserved]

(vi) Washington county / "Muskingum River Plant" / OEPA premise number 0684000000.

(gg) "Ohio Valley Electric Company": Gallia county / "Kyger Creek Station" / OEPA premise number 0627000003.

(hh) "Toledo Edison Company":

(i) Defiance county / Carpenter road, Defiance / OEPA premise number 0320010006;

(ii) [Reserved]

(iii) Lucas county / "Water Street Station" / OEPA premise number 0448010087;

(iv) Lucas county / Bay Shore Station" / OEPA premise number 0448020006;

(v) Williams county / "Stryker Substation" / OEPA premise number 0386000006.

(ii) "Youngstown Thermal Corporation": Mahoning county / OEPA premise number 0250110024.

(4) Notwithstanding the provisions of paragraph (C)(2) of this rule, no owner or operator shall cause, permit, or allow the operation or other use of any air contaminant source in violation of the limit specified in paragraph (S) of rule 3745-18-83 of the Administrative Code beyond April 30, 1983.

(5) Notwithstanding the provisions of paragraph (C)(1) of this rule, no owner or operator shall cause, permit, or allow the operation or other use of any air contaminant source in violation of the limits specified in paragraphs (E)(5) and (E)(6) of rule 3745-18-53 of the Administrative Code beyond December 31, 1985.

(6) Notwithstanding the provisions of paragraph (C)(1) of this rule, any owner or operator utilizing low sulfur fuel, including blended or washed coal, or who installs new emission control systems, or who modifies existing emission control systems, or who ceases operation in order to comply with the specified emission limitations, shall bring any air contaminant source specified in paragraph (C)(6)(a) of this rule into compliance with the limitations specified in rules 3745-18-06 to 3745-18-94 of the Administrative Code as expeditiously as practicable but in no event later than the compliance schedule identified in paragraph (C)(6)(b) of this rule. The compliance time schedule for each source shall commence on the effective date of the applicable emission as specified in rules 3745-18-06 to 3745-18-94 of the Administrative Code.

(a) Air contaminant sources.

(i) [Reserved]

(ii) "Columbus Southern Power Company": Coshocton county / "Conesville Generating Station" / OEPA premise number 0616000000 / OEPA source numbers B007 and B008; and

(iii) Sources subject to rule 3745-18-15 of the Administrative Code.

(b) Compliance time schedule.

(i) No more than eight weeks after the commencement date specified in paragraph (C)(6) of this rule, the owner or operator of a facility specified in paragraph (C)(6)(a) of this rule shall notify the director of the intent to utilize low sulfur fuels, install new emission control systems, modify existing emission control systems, or cease operation to achieve compliance, and if utilizing low sulfur fuel to achieve compliance, the owner or operator shall submit to the director a ten year projection of the amount of fuels by types that will be substantially adequate to enable compliance with the applicable limitation;

(ii) No more than thirty-two weeks after the commencement date specified in paragraph (C)(6) of this rule, the owner or operator of a facility specified in paragraph (C)(6)(a) of this rule shall submit to the director, if applicable, data demonstrating the availability of the low sulfur fuel projected to meet the emission limits contained in rules 3745-18-07 to 3745-18-94 of the Administrative Code;

(iii) No more than thirty-six weeks after the commencement date specified in paragraph (C)(6) of this rule, the owner or operator of a facility specified in paragraph (C)(6)(a) of this rule shall submit to the director a statement as to whether modifications to boiler or emission control equipment will be necessary, and if modifications will be necessary, submit preliminary plans for such modifications;

(iv) No more than forty-two weeks after the commencement date specified in paragraph (C)(6) of this rule, the owner or operator of a facility specified in paragraph (C)(6)(a) of this rule shall submit to the director final plans for equipment modifications necessary to achieve compliance;

(v) No more than fifty weeks after the commencement date specified in paragraph (C)(6) of this rule, the owner or operator of a facility specified in paragraph (C)(6)(a) of this rule shall award contracts for necessary boiler or emission control modifications, if applicable, and notify the director in writing that such action was taken or, if applicable, submit to the director a detailed schedule for final closure;

(vi) No more than sixty weeks after the commencement date specified in paragraph (C)(6) of this rule, the owner or operator of a facility specified in paragraph (C)(6)(a) of this rule shall initiate on-site modifications, if applicable, and notify the director that such action was taken;

(vii) No more than one hundred eighteen weeks after the commencement date specified in paragraph (C)(6) of this rule, the owner or operator utilizing low sulfur fuel to achieve compliance at a facility specified in paragraph (C)(6)(a) of this rule shall complete on-site modifications, if applicable, and notify the director in writing that such action was taken;

(viii) No more than one hundred twenty-two weeks after the commencement date specified in paragraph (C)(6) of this rule, the owner or operator using low sulfur fuels to achieve compliance at a facility specified in paragraph (C)(6)(a) of this rule shall achieve final compliance with the applicable emission limitations specified in rules 3745-18-06 to 3745-18-94 of the Administrative Code and certify compliance to the director in accordance with rule 3745-18-04 of the Administrative Code;

(ix) No more than one hundred forty-four weeks after the commencement date specified in paragraph (C)(6) of this rule, the owner or operator installing new emission control systems, or modifying existing emission control systems in order to comply with the emission limitations at a facility specified in paragraph (C)(6)(a) of this rule shall complete on-site modifications or installations and notify the director in writing that such action was taken; and

(x) No more than one hundred fifty-six weeks after the commencement date specified in paragraph (C)(6) of this rule, the owner or operator installing new emission control systems, or modifying existing emission control systems in order to comply with the emission limitations at a facility specified in paragraph (C)(6)(a) of this rule shall achieve final compliance with the applicable emission limits specified in rules 3745-18-06 to 3745-18-94 of the Administrative Code and certify compliance to the director in accordance with rule 3745-18-04 of the Administrative Code.

(7)

(a) Notwithstanding the provisions of paragraph (C)(1) of this rule, any owner or operator who utilizes low sulfur fuels, or who installs new emission control systems, or who modifies existing emission control systems, or who ceases operation in order to comply with the specified emission limits, shall bring any subject air contaminant source into compliance with the limits specified

in paragraphs (B) and (N) of rule 3745-18-24 of the Administrative Code as expeditiously as practicable but in no event later than the compliance schedule identified in paragraph (C)(7)(b) of this rule. The commencement date of the compliance time schedule shall be the effective date of this rule.

(b) Compliance time schedule.

(i) No more than eight weeks after the commencement date specified in paragraph (C)(7)(a) of this rule, the owner or operator of a facility specified therein shall notify the director of the intent to utilize low sulfur fuels, install new emission control systems, modify existing emission control systems, or cease operation to achieve compliance, and if utilizing low sulfur fuel to achieve compliance, the owner or operator shall submit to the director a ten year projection of the amount of fuels by types that will be substantially adequate to enable compliance with the applicable emission limits;

(ii) No more than sixteen weeks after the commencement date specified in paragraph (C)(7)(a) of this rule, the owner or operator of a facility specified therein shall submit to the director, if applicable, data demonstrating the availability of the low sulfur fuel projected to meet the applicable emission limits;

(iii) No more than twenty-five weeks after the commencement date specified in paragraph (C)(7)(a) of this rule, the owner or operator of a facility specified therein shall submit to the director a statement as to whether modifications to boiler or emission control equipment will be necessary to achieve compliance, and if modifications will be necessary, submit preliminary plans for such modifications;

(iv) No more than thirty-two weeks after the commencement date specified in paragraph (C)(7)(a) of this rule, the owner or operator of a facility specified therein shall submit to the director final plans for equipment modifications necessary to achieve compliance;

(v) No more than forty-eight weeks after the commencement date specified in paragraph (C)(7)(a) of this rule, the owner or operator of a facility specified therein shall award contracts for necessary boiler or emission control modifications, if applicable, and notify the director in writing that such action was taken or, if applicable, submit to the director a detailed schedule for final closure;

(vi) No more than sixty weeks after the commencement date specified in paragraph (C)(7)(a) of this rule, the owner or operator of a facility specified therein shall initiate on-site modifications, if applicable, and notify the director that such action was taken;

(vii) No more than one hundred twelve weeks after the commencement date specified in paragraph (C)(7)(a) of this rule, the owner or operator utilizing low sulfur fuel to achieve compliance at a facility specified therein shall complete on-site modifications, if applicable, and notify the director in writing that such action was taken;

(viii) No more than one hundred twenty-four weeks after the commencement date specified in paragraph (C)(7)(a) of this rule, the owner or operator utilizing low sulfur fuel to achieve compliance at a facility specified therein shall achieve final compliance with the applicable emission limits and certify compliance to the director in accordance with paragraph (B) of this rule;

(ix) No more than one hundred forty-four weeks after the commencement date specified in paragraph (C)(7)(a) of this rule, the owner or operator installing new emission control systems, or modifying existing emission control systems in order to achieve compliance at a facility specified therein shall complete on-site modifications or installations and notify the director in writing that such action was taken; and

(x) No more than one hundred fifty-six weeks after the commencement date specified in paragraph (C)(7)(a) of this rule, the owner or operator installing new emission control systems or modifying existing emission control systems in order to achieve compliance at a facility specified therein shall achieve final compliance with the applicable emission limits specified in rules 3745-18-06 to 3745-18-94 of the Administrative Code and certify compliance to the director in accordance with rule 3745-18-04 of the Administrative Code.

(8)

(a) Notwithstanding the provisions of paragraph (C)(1) of this rule and except as provided in paragraph (C)(9) of this rule, any owner or operator who utilizes low sulfur fuels, or who installs new emission control systems, or who modifies existing emission control systems, or who ceases operation in order to comply with the specified emission limits, shall bring any subject air contaminant source into compliance with the limits specified in rule 3745-18-37 of the Administrative Code, Hamilton county emission limits, as expeditiously as practicable but in no event later than the compliance schedule identified in paragraph (C)(8)(b) of this rule. The commencement date of the compliance time schedule shall be the effective date of this rule.

(b) Compliance time schedule.

(i) No later than July 31, 1992, the owner or operator of a facility specified in paragraph (C)(8)(a) of this rule shall notify the director of the intent to utilize low sulfur fuels, install new emission control systems, modify existing emission control systems, or cease operation to achieve compliance, and if utilizing low sulfur fuel to achieve compliance, the owner or operator shall submit to the director a ten year projection of the amount of fuels by types that will be substantially adequate to enable compliance with the applicable emission limits;

(ii) No later than September 25, 1992, the owner or operator of a facility specified in paragraph (C)(8)(a) of this rule shall submit to the director, if applicable, data demonstrating the availability of the low sulfur fuel projected to meet the applicable emission limits;

(iii) No later than October 9, 1992, the owner or operator of a facility specified in paragraph (C)(8)(a) of this rule shall submit to the director a statement as to whether modifications to boiler or emission control equipment will be necessary to achieve compliance, and if modifications will be necessary, submit preliminary plans for such modifications;

(iv) No later than January 20, 1993, the owner or operator of a facility specified in paragraph (C)(8)(a) of this rule shall submit to the director final plans for equipment modifications necessary to achieve compliance;

(v) No later than February 7, 1993, the owner or operator of a facility specified in paragraph (C)(8)(a) of this rule shall award contracts for necessary boiler or emission control modifications, if applicable, and notify the director in writing that such action was taken or, if applicable, submit to the director a detailed schedule for final closure;

(vi) No later than June 9, 1993, the owner or operator of a facility specified in paragraph (C)(8)(a) of this rule shall initiate on-site modifications, if applicable, and notify the director that such action was taken;

(vii) No later than August 4, 1993, the owner or operator utilizing low sulfur fuel to achieve compliance at a facility specified in paragraph (C)(8)(a) of this rule shall complete on-site modifications, if applicable, and notify the director in writing that such action was taken;

(viii) No later than September 15, 1993, the owner or operator utilizing low sulfur fuel to achieve compliance at a facility specified in paragraph (C)(8)(a) of this rule shall achieve final compliance with the applicable emission limits and certify compliance to the director in accordance with paragraph (B) of this rule;

(ix) No later than November 10, 1993, the owner or operator installing new emission control systems, or modifying existing emission control systems in order to achieve compliance at a facility specified in paragraph (C)(8)(a) of this rule shall complete on-site modifications or installations and notify the director in writing that such action has been taken; and

(x) No later than December 22, 1993, the owner or operator installing new emission control systems or modifying existing emission control systems in order to achieve compliance at a facility specified in paragraph (C)(8)(a) of this rule shall achieve final compliance with the applicable emission limits specified in rules 3745-18-06 to 3745-18-94 of the Administrative Code and certify compliance to the director in accordance with rule 3745-18-04 of the Administrative Code.

(9)

(a) Notwithstanding the provisions of paragraph (C)(1) of this rule, any owner or operator who utilizes low sulfur fuels, or who installs new emission control systems, or who modifies existing emission control systems, or who ceases operation in order to comply with the specified emission limits, shall bring any subject air contaminant source into compliance with the limits specified in paragraph (BB) of rule 3745-18-37 of the Administrative Code as expeditiously as practicable but in no event later than the compliance schedule identified in paragraph (C)(9)(b) of this rule. The commencement date of the compliance time schedule shall be October 31, 1991.

(b) Compliance time schedule.

(i) No later than November 6, 1991, the owner or operator of the facility shall submit to the director a final control plan that describes at a minimum the steps which will be taken to achieve compliance; and if utilizing low sulfur fuel to achieve compliance, the owner or operator shall submit to the director a ten year projection of the amount of fuels by types that will be substantially adequate to enable compliance with the applicable emission limits;

(ii) No later than January 1, 1992, the owner or operator of the facility shall submit to the director, if applicable, data demonstrating the availability of the low sulfur fuel projected to meet the applicable emission limits;

(iii) No later than August 6, 1992, the owner or operator of the facility shall negotiate and sign all necessary contracts, or issue orders for the purchase of component parts and notify the director in writing that such action was taken;

(iv) No later than October 6, 1992, the owner or operator of the facility shall initiate on-site construction or installation and notify the director that such action was taken;

(v) No later than November 22, 1993, the owner or operator of the facility shall complete construction, or cease operation of OEPA source number B005, B006 and B007, and shall certify compliance to the director in accordance with paragraph (B) of this rule; and

(vi) After December 22, 1993, sources B005, B006 and B007 shall not be operated except in compliance with the requirements of paragraph (BB) of rule 3745-18-37 of the Administrative Code.

(10) Notwithstanding the provisions of paragraphs (C)(1) to (C)(9) of this rule, the "Columbus Southern Power Company, Picway Power Plant," or any owner or operator of the sources subject to the emission limit specified in paragraph (B)(1) of rule 3745-18-71 of the Administrative Code, shall bring the subject air contaminant sources into compliance with that limit as expeditiously as practicable, but in no event later than June 30, 2001.

(D) Alternative emission limits.

(1) Any owner or operator of an air contaminant source specified in paragraphs (D)(1)(a) to (D)(1)(c) of this rule having alternative sulfur dioxide emission limits specified in rules 3745-18-06 to 3745-18-94 of the Administrative Code shall notify the director of the selected emission limits in accordance with the requirements of paragraphs (D)(2)(a) and (D)(2)(b) of this rule.

(a) "Henkel Corporation, Emery Group" (OEPA premise number 1431070035); paragraph (D)(1) or (D)(2) of rule 3745-18-37 of the Administrative Code.

(b) "Ford Motor Company" (OEPA premise number 1431140861); paragraph (V)(1) or (V)(2) of rule 3745-18-37 of the Administrative Code.

(c) "Cincinnati Gas and Electric Company, Miami Fort Station" (OEPA premise number 1431350093); paragraphs (BB)(2) and (BB)(3) or paragraphs (BB)(7) and (BB)(8) of rule 3745-18-37 of the Administrative Code.

(2)

(a) No more than eight weeks after the effective date of the applicable emission limits the owner or operator shall notify the director of the selected alternative emission limits and shall bring any subject source into compliance with the selected alternative emission limits as expeditiously as

practicable, but in no event later than the compliance schedule specified in paragraph (C)(8) or (C)(9) of this rule.

(b) If, after the final compliance date, any owner or operator of an air contaminant source specified in paragraphs (D)(1)(a) to (D)(1)(c) of this rule elects to comply with an alternative emission limit not selected under the provisions of paragraph (D)(2)(a) of this rule, such owner or operator shall notify the director at least ninety days prior to the intended date of final compliance with the new limits. Any air contaminant source having alternative emission limits shall continuously comply with one of the alternative emission limits at all times after the final compliance date.

Effective: 08/26/2011

R.C. 119.032 review dates: 11/30/2015

CERTIFIED ELECTRONICALLY
Certification

08/16/2011
Date

Promulgated Under: 119.03
Statutory Authority: 3704.03(E)
Rule Amplifies: 3704.03(A), 3704.03(E)
Prior Effective Dates: 12/28/79, 10/1/82, 12/15/82, 11/1/84, 5/11/87, 6/15/89, 10/31/9, 12/31/00, 1/23/06, 4/18/09, 2/17/2011

3745-18-04 **Measurement methods and procedures.**

[Comment: For dates of non-regulatory government publications, publications of recognized organizations and associations, federal rules, and federal statutory provisions referenced in this rule, see paragraph (C) of rule 3745-18-01 of the Administrative Code titled "Referenced materials."]

(A) Unless otherwise specified in paragraphs (B) to (E) of this rule, the non-continuous test methods used for determining compliance with the allowable emission limits in rules 3745-18-06 to 3745-18-94 of the Administrative Code shall be those specified in 40 CFR Part 60.

(B) The test methods and procedures used for determining compliance with the allowable emission limits for any sulfur recovery plant shall be those specified in 40 CFR 60.46.

(C) The test methods and procedures used for determining compliance with the allowable emission limit for any sulfuric acid production unit or any primary zinc smelter shall be those specified in 40 CFR 60.85.

(D) Unless otherwise specified in this rule, the test methods and procedures used for determining compliance with the allowable emission limit for any fuel burning equipment burning coal shall be one of the following:

(1) Stack gas sampling using Methods 1 through 4, and 6, 6A, 6B or 6C as specified in 40 CFR Part 60, Appendix A and 40 CFR 60.46, at a frequency to be determined by the director; or

(2) Continuous emission monitoring using continuous monitoring systems meeting the requirements of "Performance Specification 2" in 40 CFR Part 60, Appendix B and 40 CFR Part 60, Appendix F with any necessary modifications approved by the director. Emission rates shall be determined using methods specified in 40 CFR 60.45 and 40 CFR 60.47a, 40 CFR 60.47b or 40 CFR 60.47c. Compliance with the applicable sulfur dioxide emission limitation shall be based on daily calculations using an arithmetic average of all data available for the preceding thirty-day period; or

(3) Coal sampling and analysis in accordance with Method 19 as specified in 40 CFR Part 60, Appendix A or equivalent methods as approved by the director. The representative sulfur dioxide emission rate from any sample shall be calculated using the formulas in paragraph (F) of this rule. Coal monitoring and compliance determination procedures shall be:

(a) Except as specified by the director, for all facilities greater than one thousand MM Btus per hour heat input capacity, daily as-fired fuel sampling. Compliance with the applicable sulfur dioxide emission limit shall be determined based on the weighted arithmetic average of the preceding thirty consecutive daily sample analyses.

(b) For all facilities greater than one hundred MM Btus per hour heat input capacity and less than or equal to one thousand MM Btus per hour heat input capacity, monthly composite sampling. Such composite samples shall be composed of either periodic as-fired samples, with the collection frequency determined by the director, or as-received samples with a minimum of one sample per truckload or carload. Compliance with the applicable sulfur dioxide emission limit shall be determined based on the analysis of each monthly composite sample.

(c) For all facilities greater than ten MM Btus per hour heat input capacity and less than or equal to one hundred MM Btus per hour heat input capacity, either monthly composite sampling consistent with paragraph (D)(3)(b) of this rule, or monthly average fuel analysis based on fuel supplier analyses. Fuel supplier analyses shall be obtained for each shipment received during the calendar month. Compliance with the applicable sulfur dioxide emission limit shall be determined based on the weighted arithmetic average of all fuel supplier analyses for each calendar month.

(4) For the "Cardinal Operating Company and Buckeye Power, Incorporated" (OEPA premise numbers 0641050002 and 1741050129) facilities located at Brilliant, Ohio, fuel analysis using any method approved by the director for determining heat content of the fuel and decimal fraction of sulfur in the fuel utilized during any calendar day period. Alternative methods may be submitted with the certification required by paragraph (B) of rule 3745-18-03 of the Administrative Code. The representative sulfur dioxide emission rate from any sample shall be calculated using the formulas in paragraph (F) of this rule. Compliance with the applicable sulfur dioxide emission limit shall be based on two allowed exceedances in any consecutive thirty-day period. Each day completes a new thirty-day period.

(5)

(a) For any fuel burning equipment burning coal at the sources described below, compliance with the applicable sulfur dioxide emission limits shall be determined using the methods described in paragraphs (D)(5)(b) and (D)(5)(c) of this rule. A determination of noncompliance pursuant to either of these methods shall not be refuted by evidence of compliance pursuant to the other method:

(i) [Reserved]

(ii) Coshocton county / "Columbus Southern Power Company, Conesville Generating Station" / OEPA premise number 0616000000 / unit numbers 5 and 6 / OEPA source numbers B007 and B008.

(b) Compliance shall be determined by stack gas sampling using method specified in 40 CFR 60.46, at a frequency to be determined by the director; or

(c) Compliance shall be determined by coal sampling and analysis in accordance with method 19 as specified in 40 CFR Part 60, Appendix A or equivalent methods as approved by the director. The representative sulfur dioxide emission rate from any sample shall be calculated using the formulas in paragraph (F) of this rule. Coal monitoring and compliance determination procedures shall be:

(i) Except as specified by the director, for all facilities greater than one thousand MM Btus per hour heat input capacity, daily as-fired fuel sampling. Compliance with the applicable sulfur dioxide emission limit shall be determined based on the weighted arithmetic average of the preceding thirty consecutive daily sample analyses;

(ii) For all facilities greater than one hundred MM Btus per hour heat input capacity and less than or equal to one thousand MM Btus per hour heat input capacity, monthly composite sampling. Such composite samples shall be composed of either periodic as-fired samples, with the collection frequency determined by the director, or as-received samples with a minimum of one sample per truckload or carload. Compliance with the applicable sulfur dioxide emission limit shall be determined based on the analysis of each monthly composite sample; and

(iii) For all facilities greater than ten MM Btus per hour heat input capacity and less than or equal to one hundred MM Btus per hour heat input capacity, either monthly composite sampling consistent with paragraph (D)(3)(b) of this rule, or monthly average fuel analysis based on fuel supplier analyses. Fuel supplier analyses shall be obtained for each shipment received during the calendar month. Compliance with the applicable sulfur dioxide emission limit shall be determined based on the weighted arithmetic average of all fuel supplier analyses for each calendar month.

(6) For any fuel burning equipment burning coal at the "ISG Cleveland Incorporated" (OEPA premise number 1318001613) facility located in Cleveland, Ohio, compliance shall be determined using the methods described in paragraphs (D)(6)(a) to (D)(6)(c) of this rule.

(a) Stack gas sampling using methods specified in 40 CFR 60.46, at a frequency to be determined by the director; or

(b) Continuous emission monitoring using continuous monitoring systems meeting the requirements of "Performance Specification 2" in 40 CFR Part 60, Appendix B and 40 CFR Part 60, Appendix F with any necessary modifications approved by the director. Emission rates shall be determined using methods specified in 40 CFR 60.45 and 40 CFR 60.47a. Compliance with the applicable sulfur dioxide emission limits shall be based on daily average calculations; or

(c) Coal sampling and analysis in accordance with method 19 as specified in 40 CFR, Part 60, Appendix A, or equivalent methods as approved by the director. Coal monitoring and compliance determination procedures shall consist of daily, as-fired fuel sampling for all sources greater than one hundred MM Btus per hour actual heat input capacity. The representative sulfur dioxide emission rate from any sample shall be calculated using the formulas in paragraph (F) of this rule. Compliance with the applicable sulfur dioxide emission limits shall be determined based on a daily average.

(7) For any fuel burning equipment burning coal at any sulfur dioxide emissions source subject to, and not specifically exempted from, rule 3745-18-37 of the Administrative Code, Hamilton county emission limits, compliance with the applicable sulfur dioxide emission limits shall be determined using stack gas sampling using methods 1 through 4, and 6, 6A, 6B or 6C as specified in 40 CFR 60.46.

(8) For any fuel burning equipment burning coal at any sulfur dioxide emissions source subject to, and not specifically exempted from, rule 3745-18-37 of the Administrative Code, Hamilton county emission limits, emission tracking, recordkeeping, and reporting requirements shall be those described in paragraphs (D)(8)(a) to (D)(8)(e) of this rule.

(a) Continuous emission monitoring using continuous monitoring systems meeting the requirements of "Performance Specification 2" in 40 CFR Part 60, Appendix B and 40 CFR Part 60, Appendix F . Emission rates shall be determined using methods specified in 40 CFR 60.45 and 40 CFR 60.47a, 40 CFR 60.47b or 40 CFR 60.47c; or

(b) Coal sampling and analysis in accordance with method 19 as specified in 40 CFR Part 60, Appendix A. Emission tracking procedures shall consist of weekly, as-fired fuel sampling for all sources greater than one hundred MM Btus per hour actual heat input capacity. The representative sulfur dioxide emission rate from any sample shall be calculated using the formulas in paragraph (F) of this rule; or

(c) Either monthly composite sampling consistent with paragraph (D)(8)(b) of this rule, or fuel supplier analyses, for all sources greater than ten MM Btus per hour heat input capacity and less than one hundred MM Btus per hour heat input capacity. Fuel supplier analyses shall be obtained for each shipment received. The representative sulfur dioxide emission rate from any sample or fuel supplier analysis shall be calculated using the formulas in paragraph (F) of this rule.

(d) In lieu of the emission tracking requirements in paragraphs (D)(8)(a) to (D)(8)(c) of this rule, the owners or operators of the following sources shall provide coal sampling and analysis in accordance with method 19 as specified in 40 CFR Part 60, Appendix A and in accordance with the requirements indicated:

(i) "Henkel Corporation, Emery Group" (OEPA premise number 1431070035); boiler numbers 1 and 2 (OEPA source numbers B027 and B028); one representative coal sample per day for analysis. The coal sample shall consist of at least twenty-four sample increments weighing a minimum of two pounds each.

(ii) "DEGS of St. Bernard, LLC" (OEPA premise number 1431394148); boiler 4 (OEPA source B022); one representative coal sample per day for analysis. The coal sample shall consist of at least fourteen sample increments weighing a minimum of two pounds each.

(iii) [Reserved]

(iv) "PMC Specialties Group, Division of PMC Incorporated" (OEPA premise number 1431390137); boiler number 2 (OEPA source number B003); one representative coal sample per week for analysis. The coal sample shall consist of at least six sample increments weighing a minimum of 1.5 pounds each.

(v) "University Hospital" (OEPA premise number 1431070207); boiler numbers 3 and 4 (OEPA source numbers B008 and B003); one representative coal sample per week for analysis. The coal sample shall consist of at least one sample increment per boiler and each increment shall weigh a minimum of five pounds each.

(vi) Until December 22, 1993, "University of Cincinnati" (OEPA premise number 1431070849); boiler numbers 1 and 4 (OEPA source numbers B001 and B004); one representative coal sample per week for analysis. The coal sample shall consist of at least one sample increment per boiler and each increment shall weigh a minimum of five pounds each.

(vii) "Duke Energy of Ohio, Miami Fort Station" (OEPA premise number 1431350093); unit numbers 6, 7 and 8 (OEPA source numbers B007, B015 and B016); one representative coal sample per day for analysis which shall be conducted according to the appropriate ASTM method.

(e) Any owner or operator required to perform emissions tracking pursuant to paragraph (D)(8) of this rule shall maintain such records for a period of not less than three years and shall make such records available for inspection by and submittal to the director upon request.

(9) For any fuel burning equipment burning coal at any sulfur dioxide emissions source subject to, and not specifically exempted from, rule 3745-18-15 of the Administrative Code compliance with the applicable sulfur dioxide emission limits shall be determined using the methods described in paragraphs (D)(9)(a) to (D)(9)(c) of this rule. A determination of noncompliance pursuant to any of these methods shall not be refuted by evidence of compliance pursuant to any other of these methods.

(a) Stack gas sampling using methods 1 through 4, and 6, 6A, 6B or 6C as specified in 40 CFR Part 60, Appendix A and 40 CFR 60.46, at a frequency to be determined by the director; or

(b) Continuous emission monitoring using continuous monitoring systems meeting the requirements of "Performance Specification 2" as specified in 40 CFR Part 60, Appendix B and the requirements specified in 40 CFR Part 60, Appendix F, with any necessary modifications approved by the director. Emission rates shall be determined using methods specified in 40 CFR 60.45 and 40 CFR 60.47a, 40 CFR 60.47b or 40 CFR 60.47c. Compliance with the applicable sulfur dioxide emission limits shall be based on daily average calculations; or

(c) Coal sampling and analysis in accordance with method 9 as specified in 40 CFR Part 60, Appendix A, or equivalent methods as approved by the director. The representative sulfur dioxide emission rate from any sample shall be calculated using the formulas in paragraph (F) of this rule. Coal monitoring and compliance determination procedures shall be:

(i) Except as specified by the director, for all facilities greater than one thousand MM Btus per hour heat input capacity, daily as-fired fuel sampling. Compliance with the applicable sulfur dioxide emission limits shall be determined based on a daily average.

(ii) For all facilities greater than one hundred MM Btus per hour heat input capacity and less than or equal to one thousand MM Btus per hour heat input capacity, monthly composite sampling. Such composite samples shall be composed of either periodic as-fired samples, with the

collection frequency determined by the director, or as-received samples with a minimum of one sample per truckload or carload. Compliance with the applicable sulfur dioxide emission limit shall be determined based on the analysis of each monthly composite sample.

(iii) For all facilities greater than ten MM Btus per hour heat input capacity and less than or equal to one hundred MM Btus per hour heat input capacity, either monthly composite sampling consistent with paragraph (D)(9)(c)(ii) of this rule, or monthly average fuel analysis based on fuel supplier analyses. Fuel supplier analyses shall be obtained for each shipment received during the calendar month. Compliance with the applicable sulfur dioxide emission limit shall be determined based on the weighted arithmetic average of all fuel supplier analyses for each calendar month.

(E) Unless otherwise specified in this rule, the test methods and procedures used for determining compliance with the allowable emission limit for any fuel burning equipment burning fuels other than coal shall be one of the following:

(1) Stack gas sampling using methods 1 through 4, and 6, 6A, 6B or 6C as specified in 40 CFR Part 60, Appendix A and 40 CFR 60.46, at a frequency to be determined by the director; or

(2) Continuous emission monitoring using continuous monitoring systems meeting the requirements of "Performance Specification 2" as specified in 40 CFR Part 60, Appendix B and the requirements of 40 CFR Part 60, Appendix F with any necessary modifications approved by the director. Emissions rates shall be determined using methods specified in 40 CFR 60.45 and 40 CFR 60.47a, 40 CFR 60.47b or 40 CFR 60.47c. Compliance with the applicable sulfur dioxide emission limitation shall be based on daily calculations using an arithmetic average of all data available for the preceding thirty-day period; or

(3) Fuel sampling and analysis in accordance with method 19 as specified in 40 CFR Part 60, Appendix A or the appropriate ASTM methods, or equivalent methods as approved by the director. In lieu of performing onsite sampling, representative fuel analyses performed by fuel suppliers may be acceptable. The representative sulfur dioxide emission rate from any sample shall be calculated using the formulas in paragraph (F) of this rule. The sampling frequency shall be, at a minimum, such that a sulfur dioxide emission rate representative of the thirty-day average emission rate can be determined.

(4) For any fuel burning equipment burning fuels other than coal at the "LTV Steel Company, Incorporated" (OEPA premise numbers 1318000078 and 1318001613) facilities located in Cleveland, Ohio, compliance shall be determined using the methods described in paragraphs (E)(4)(a) to (E)(4)(c) of this rule:

(a) Stack gas sampling using methods 1 through 4, and 6 as specified in 40 CFR 60.46, at a frequency to be determined by the director; or

(b) Continuous emission monitoring using continuous monitoring systems meeting the requirements of "Performance Specification 2" as specified in 40 CFR Part 60, Appendix B and Appendix F with any necessary modifications approved by the director. Emission rates shall be determined using methods specified in 40 CFR 60.45 and 40 CFR 60.47a. Compliance with the applicable sulfur dioxide emission limits shall be based on daily average calculations; or

(c) Fuel sampling and analysis in accordance with method 19 as specified in 40 CFR Part 60, Appendix A or the appropriate ASTM methods, or equivalent methods as approved by the director. In lieu of performing on-site sampling, representative fuel analyses performed by the fuel suppliers may be acceptable. The representative sulfur dioxide emission rate from any sample shall be calculated using the formulas in paragraph (F) of this rule. The sampling frequency shall be, at a minimum, such that a sulfur dioxide emission rate representative of the daily average emission rate can be determined.

(5) For any fuel burning equipment burning fuels other than coal at any sulfur dioxide emissions source subject to, and not specifically exempted from, rule 3745-18-37 of the Administrative Code, Hamilton county emission limits, compliance with the applicable sulfur dioxide emission limits shall be determined using stack gas sampling using methods 1 through 4 and 6, 6A, 6B or 6C as specified in 40 CFR Part 60, Appendix A and 40 CFR 60.46.

(6) For any fuel burning equipment burning fuels other than coal at any sulfur dioxide emissions source subject to, and not specifically exempted from, rule 3745-18-37 of the Administrative Code, Hamilton county emission limits, emission tracking, recordkeeping and reporting requirements shall be those described in paragraphs (E)(6)(a) and (E)(6)(b) of this rule.

(a) Continuous emission monitoring using continuous monitoring systems meeting the requirements of "Performance Specification 2" as specified in 40 CFR Part 60, Appendix B and 40 CFR Part 60, Appendix F. Emission rates shall be determined using methods specified in 40 CFR 60.45 and 40 CFR 60.47a, 40 CFR 60.47b or 40 CFR 60.47c; or

(b) Fuel sampling and analysis in accordance with method 19 as specified in 40 CFR Part 60, Appendix A, or the appropriate ASTM methods. In lieu of performing on-site sampling, representative fuel analyses performed by the fuel suppliers may be acceptable. The representative sulfur dioxide emission rate from any sample shall be calculated using the formulas in

paragraph (F) of this rule. The sampling frequency shall be, at a minimum, such that at least one analysis is obtained from each shipment of fuel.

(7) For any fuel burning equipment burning fuels other than coal at any sulfur dioxide emissions source subject to, and not specifically exempted from, rule 3745-18-15 of the Administrative Code, Butler county emission limits, compliance with the applicable sulfur dioxide emission limits shall be determined using the methods described in paragraphs (E)(7)(a) to (E)(7)(c) of this rule. A determination of noncompliance pursuant to any of these methods shall not be refuted by evidence of compliance pursuant to any other of these methods:

(a) Stack gas sampling using methods 1 through 4, and 6, 6A, 6B or 6C as specified in 40 CFR Part 60, Appendix A and 40 CFR 60.46, at a frequency to be determined by the director; or

(b) Continuous emission monitoring using continuous monitoring systems meeting the requirements of "Performance Specification 2" as specified in 40 CFR Part 60, Appendix B and 40 CFR Part 60, Appendix F with any necessary modifications approved by the director. Emission rates shall be determined using methods specified in 40 CFR 60.45 and 40 CFR 60.47a, 40 CFR 60.47b or 40 CFR 60.47c. Compliance with the applicable sulfur dioxide emission limits shall be based on daily average calculations; or

(c) Fuel sampling and analysis in accordance with method 19 as specified in 40 CFR Part 60, Appendix A or the appropriate ASTM methods, or equivalent methods as approved by the director. In lieu of performing on-site sampling, representative fuel analyses performed by the fuel suppliers may be acceptable. The representative sulfur dioxide emission rate from any sample shall be calculated using the formulas in paragraph (F) of this rule. The sampling frequency shall be, at a minimum, such that a sulfur dioxide emission rate representative of the thirty-day average emission rate can be determined.

(F) Sulfur dioxide emissions from fuel samples shall be calculated as follows:

(1) From solid fuels:

$ER = (1 \times 10^6)/H \times S \times 1.9$

where: ER = the emission rate in pounds of sulfur dioxide per MM Btu;

H = the heat content of the solid fuel in Btu per pound;

S = the decimal fraction of sulfur in the solid fuel.

(2) From liquid fuels:

$ER = (1 \times 10^6)/H \times D \times S \times 1.974$

where: ER = the emission rate in pounds of sulfur dioxide per MM Btu;

H = the heat content of the liquid fuel in Btu per gallon;

D = the density of the liquid fuel in pounds per gallon; and

S = the decimal fraction of sulfur in the liquid fuel.

(3) From gaseous fuels other than natural gas as specified in paragraph (F)(4) of this rule:

$ER = (1 \times 10^6)/H \times D \times S \times 1.998$

where: ER = the emission rate in pounds of sulfur dioxide per MM Btu;

H = the heat content of the gaseous fuel in Btu per standard cubic foot;

D = the density of the gaseous fuel in pounds per standard cubic foot; and

S = the decimal fraction of sulfur in the gaseous fuel.

(4) From natural gas, the sulfur dioxide emission rate shall be considered to be equal to 0.0 pounds of sulfur dioxide per MM Btu.

(G) All data, calculations and reports from any performance test, continuous monitor and/or fuel sample developed for the purpose of demonstrating compliance with rules 3745-18-06 to 3745-18-94 of the Administrative Code shall be retained for a minimum of three years and shall be available for inspection by the director or the director's representative.

(H) Any owner or operator of any sulfur dioxide emissions source subject to, and not specifically exempted from, rule 3745-18-37 of the Administrative Code, Hamilton county emission limits, shall document any compliance test or applicable emission tracking procedure, shall document compliance with any applicable operating rate limits and shall retain all data, calculations and reports from any performance test, continuous emission monitor, fuel sample, and/or operating rate monitor utilized for the purpose of demonstrating compliance with the applicable emission limits, emission tracking requirements, and/or operating rate limits for a period of not less than three years and shall make such records available for inspection by and submittal to the director upon request.

(I) Nothing in this rule shall be interpreted to prevent the director from issuing orders pursuant to section 3704.03 of the Revised Code to require performance testing, continuous emission monitoring, or fuel sampling and/or to require record-keeping and reporting of emission information. Any such data may be used to further evaluate compliance with the requirements of rules 3745-18-06 to 3745-18-94 of the Administrative Code.

(J) Any owner or operator of any sulfur dioxide source subject to, and not specifically exempted from, paragraphs (B)(4), (B)(5), (B)(6), (B)(7), (B)(8), (B)(11), (B)(13) and (B)(14) of rule 3745-18-49 of the Administrative Code, "Lubrizol Corporation" processes "L", "M", "N", "O", "W" and "AC" (OEPA source numbers P011, P012, P013, P014, P022 and P030), shall demonstrate compliance with the combined hourly emission limits by performing emission tests in accordance with method 6 or method 6C in 40 CFR Part 60, Appendix A, and by employing the continuous emission rate monitoring system. The combined allowable sulfur dioxide emission limit for these processes for any hour shall be the sum of the individual allowable sulfur dioxide emissions limits for those processes that are in operation during any part of that hour. The combined allowable sulfur dioxide emission limit for these processes for any rolling three hour period shall be the average of the three, one hour allowable limits comprising the three hour period.

Effective: 02/17/2011

R.C. 119.032 review dates: 11/30/2010 and 11/30/2015

CERTIFIED ELECTRONICALLY
Certification

02/07/2011
Date

Promulgated Under: 119.03
Statutory Authority: 3704.03(E)
Rule Amplifies: 3704.03(A), 3704.03(E)
Prior Effective Dates: 12/28/79, 11/1/84, 5/11/87, 6/15/89, 10/31/91, 3/21/00, 9/1/03, 1/23/06

3745-18-05 **Ambient and meteorological monitoring requirements.**

(A) The director may require, under the authority of section 3704.03 of the Revised Code, any owner or operator responsible for any source of sulfur dioxide emissions which may be contributing to air pollution to install, operate, and maintain monitoring devices; to maintain records; and file periodic reports with the director.

(B) Within three months of the receipt of any order under this rule, or within another time period that such order may specify, the owner or operator shall submit to the director an "Ambient Air Quality Monitoring Plan." Such plan shall include an air quality and meteorological measurement network consistent with the objective of obtaining an accurate assessment of the sulfur dioxide air quality and meteorology within the zone impacted by sulfur dioxide emissions from the source. The plan shall follow criteria guidelines furnished by the director for number of instruments; site location; monitoring methods; equipment performance specifications; equipment operation and maintenance; analytical and data reduction quality assurance; and data reporting. The director may issue additional orders pursuant to this paragraph to require that a previously submitted plan be clarified, updated, corrected, supplemented, or otherwise amended.

(C) Owners or operators of sources with interacting and/or overlapping zones of sulfur dioxide emissions impact may join in cooperative arrangements to satisfy orders issued pursuant to paragraph (B) of this rule.

(D) The director shall give consideration to any plan submitted by an owner or operator pursuant to paragraph (B) of this rule prior to ordering the owner or operator to install, operate, and maintain monitoring devices and/or keep records and report information.

(E) Nothing in this rule shall be interpreted to prevent the director from issuing orders pursuant to section 3704.03 of the Revised Code to require the installation, operation, and maintenance of monitoring devices; and/or to require record keeping and reporting of information without first issuing an order pursuant to paragraph (B) of this rule.

Effective: 02/17/2011

R.C. 119.032 review dates: 11/30/2010 and 11/30/2015

CERTIFIED ELECTRONICALLY
Certification

02/07/2011
Date

Promulgated Under: 119.03
Statutory Authority: 3704.03(E)
Rule Amplifies: 3704.03(A), 3704.03(E)
Prior Effective Dates: 12/28/79

3745-18-06 **General emission limit provisions.**

[Comment: For dates of non-regulatory government publications, publications of recognized organizations and associations, federal rules, and federal statutory provisions referenced in this rule, see paragraph (C) of rule 3745-18-01 of the Administrative Code titled "Referenced materials."]

(A) Fuel burning equipment, stationary gas turbines, jet engine test stands and stationary internal combustion engines are exempt from paragraphs (D), (F) and (G) of this rule and from rules 3745-18-07 to 3745-18-94 of the Administrative Code during any calendar day in which natural gas is the only fuel burned.

(B) Fuel burning equipment, stationary gas turbines, jet engine test stands and stationary internal combustion engines which have rated heat input capacities equal to, or less than, ten MM Btu per hour total rated capacity are exempt from paragraphs (D), (F) and (G) of this rule and from rules 3745-18-07 to 3745-18-94 of the Administrative Code.

(C) Process equipment which has a rated capacity equal to, or less than, one thousand pounds per hour process weight input is exempt from paragraph (E) of this rule and from rules 3745-18-07 to 3745-18-94 of the Administrative Code.

(D) Except as otherwise indicated in paragraph (H) of this rule or in rules 3745-18-07 to 3745-18-94 of the Administrative Code, no owner or operator of any oil-fired steam generating unit shall cause or permit the maximum emission of sulfur dioxide from any source to exceed 1.6 pounds of sulfur dioxide per MM Btu actual heat input.

(E) Except as otherwise indicated in paragraph (H) of this rule or in rules 3745-18-07 to 3745-18-94 of the Administrative Code, no owner or operator of any process equipment shall cause or permit the maximum emission of sulfur dioxide from any source to exceed the amounts indicated by the following equations:

(1) In Cuyahoga, Lake, Stark, Summit and Trumbull counties:

$$AER = 20\ P^{0.67}$$

Where P is the process weight rate in tons per hour and AER is the allowable emission rate in pounds of sulfur dioxide per hour.

(2) In all counties not listed in paragraph (E)(1) of this rule:

$$AER = 30\ P^{0.67}$$

Where P is the process weight rate in tons per hour and AER is the allowable emission rate in pounds of sulfur dioxide per hour.

(F) Except as otherwise indicated in paragraph (H) of this rule or in rules 3745-18-07 to 3745-18-94 of the Administrative Code, no owner or operator of any stationary gas turbine shall cause or permit the maximum emission of sulfur dioxide from any source to exceed 0.5 pounds of sulfur dioxide per MM Btu actual heat input.

(G) Except as otherwise indicated in paragraph (H) of this rule or in rules 3745-18-07 to 3745-18-94 of the Administrative Code, no owner or operator of any stationary internal combustion engine shall cause or permit the maximum emission of sulfur dioxide from any source to exceed 0.5 pounds of sulfur dioxide per MM Btu actual heat input.

(H) Notwithstanding the provisions of paragraphs (D) to (G) of this rule, the requirements of 40 CFR Part 60 shall be followed where applicable.

Effective: 02/17/2011

R.C. 119.032 review dates: 11/30/2010 and 11/30/2015

CERTIFIED ELECTRONICALLY
Certification

02/07/2011
Date

Promulgated Under: 119.03
Statutory Authority: 3704.03(E)
Rule Amplifies: 3704.03(A), 3704.03(E)
Prior Effective Dates: 12/28/79, 5/11/87, 10/31/96, 9/01/03, 1/23/06

3745-18-07 **Adams county emission limits.**

(A) No owner or operator of any coal-fired steam generating unit, unless otherwise specified below, shall cause or permit the emission of sulfur dioxide from any source to exceed a maximum of 3.6 pounds of sulfur dioxide per MM Btu actual heat input.

(B) The "Dayton Power and Light Company, J. M. Stuart Electric Generating Station" (OEPA premise number 0701000007) or any subsequent owner or operator of the "Dayton Power and Light Company, J. M. Stuart Electric Generating Station," Aberdeen, Ohio shall not cause or permit the emission of sulfur dioxide from the following sources to exceed the amounts indicated:

(1) Auxiliary boiler and diesel unit numbers 1 through 4 (OEPA source numbers B005 through B009); a maximum of 0.5 pounds of sulfur dioxide per MM Btu actual heat input from each unit.

(2) Boiler numbers 1 through 4 (OEPA source numbers B001 through B004); a maximum of 3.16 pounds of sulfur dioxide per MM Btu actual heat input from each boiler.

(C) The "Dayton Power and Light Company, Killen Electric Generating Station" (OEPA premise number 0701000060) or any subsequent owner or operator of the "Dayton Power and Light Company, Killen Electric Generating Station," Monroe Township, Ohio shall not cause or permit the emission of sulfur dioxide from boiler unit number 2 (OEPA source number B001) to exceed a maximum of 1.2 pounds of sulfur dioxide per MM Btu actual heat input.

Effective: 02/17/2011

R.C. 119.032 review dates: 11/30/2010 and 11/30/2015

CERTIFIED ELECTRONICALLY
Certification

02/07/2011
Date

Promulgated Under: 119.03
Statutory Authority: 3704.03(E)
Rule Amplifies: 3704.03(A), 3704.03(E)
Prior Effective Dates: 12/28/79

3745-18-08 **Allen county emission limits.**

(A) No owner or operator of any coal-fired steam generating unit, unless otherwise specified below, shall cause or permit the emission of sulfur dioxide from any source to exceed a maximum of 2.6 pounds of sulfur dioxide per MM Btu actual heat input.

(B) The "Ohio Power Company" (OEPA premise number 0302000010) or any subsequent owner or operator of the "Ohio Power Company, County Line Road and Lake Street, Bluffton, Ohio" shall not cause or permit the emission of sulfur dioxide from boiler numbers 1 through 5 (OEPA source numbers B001 through B005) to exceed a maximum of 1.8 pounds of sulfur dioxide per MM Btu actual heat input from each boiler.

(C) The "Premcor Refining Group, Inc." (OEPA premise number 0302020012) or any subsequent owner or operator of the "Premcor Refining Group, Inc," Lima, Ohio shall not cause or permit the emission of sulfur dioxide from the following sources to exceed the amounts indicated:

(1) Vacuum II heater (OEPA source number B001),

ISO I and II process heaters (OEPA source number B003),

PRE 1, 2, 3 process heaters (OEPA source number B006),

HDS process heater (OEPA source number B008),

Riley boiler (OEPA source number B009),

FCC south process heater (OEPA source number B015),

FCC north process heater (OEPA source number B016),

Trolumen furnace (OEPA source number B018),

CO boiler super-heater (OEPA source number B021), and

V/F regenerator heater (OEPA source number B007),

A maximum of 0.15 pounds of sulfur dioxide per MM Btu actual heat input from each boiler.

(2) MEK dewaxing section heater (OEPA source number B013),

Furforal extraction process heater (OEPA source number B014),

Boiler house boilers (OEPA source number B020),

ISO stabilizer and splitter heater (OEPA source number B002),

Crude II process heaters (OEPA source number B004),

Crude I process heater (OEPA source number B010),

Coke process heater (OEPA source number B011),

Vacuum I process heater (OEPA source number B012), and

Detailer (OEPA source number B005);

A maximum of 1.0 pounds of sulfur dioxide per MM Btu actual heat input from each heater.

(3) Sulfur recovery unit (OEPA source number P040); a maximum of one hundred pounds of sulfur dioxide per one thousand pounds of sulfur processed at the Claus unit.

(4) Trolumen unit (OEPA source number P004); a maximum of 11.0 pounds of sulfur dioxide per ton of product.

(5) FCC/CO boiler (OEPA source number P010); a maximum of 0.92 pounds of sulfur dioxide per one thousand pounds of fresh feed.

(D) The "PCS Nitrogen Ohio L.P." (OEPA premise number 0302020015) or any subsequent owner or operator of the "PCS Nitrogen Ohio L.P, Fort Amanda and Adgate Roads, Lima, Ohio" shall not cause or permit the emission of sulfur dioxide from the following sources to exceed the amounts indicated:

(1) P.R. numbers 3430 and 3431 (OEPA source numbers B501 and B502); a maximum of 1.27 pounds of sulfur dioxide per MM Btu actual heat input from each boiler.

(2) Reforming furnace (OEPA source number B503); a maximum of 1.27 pounds of sulfur dioxide per MM Btu actual heat input.

(E) The "Ford Motor Company" (OEPA premise number 0302020143) or any subsequent owner or operator of the "Ford Motor Company, Bible Road and North Sugar Street, Lima, Ohio" shall not cause or permit the emission of sulfur dioxide from boiler numbers 104878, 107564, and 107565 (OEPA source numbers B001 through B003) to exceed a maximum of 3.4 pounds of sulfur dioxide per MM Btu actual heat input from each boiler.

(F) The "Clark Equipment Company" (OEPA premise number 0302020245) or any subsequent owner or operator of the "Clark Equipment Company, 1046 South Main Street, Lima, Ohio" shall not cause or permit the emission of sulfur dioxide from boiler numbers 15047-1 and 15047-2 (OEPA source numbers B001 and B002) to exceed a maximum of 2.54 pounds of sulfur dioxide per MM Btu actual heat input from each boiler.

(G) The "Oakwood Correctional Facility" (OEPA premise number 0302020256) or any subsequent owner or operator of the "Oakwood Correctional Facility, State Route 65N, Lima, Ohio," shall not cause or permit the emission of sulfur dioxide from boiler numbers 1, 2, and 3 (OEPA source numbers B001 through B003) to exceed a maximum of 5.39 pounds of sulfur dioxide per MM Btu actual heat input from each boiler.

(H) The "Chemtrade Logistics, Inc." (OEPA premise number 0302000001) or any subsequent owner or operator of the "Chemtrade Logistics, Inc.," Cairo, Ohio shall not cause or permit the emission of sulfur dioxide from the sulfuric acid plant (OEPA source number P001) to exceed a maximum of 35.0 pounds of sulfur dioxide per ton of one hundred per cent acid produced.

(I) The "Joint Systems Manufacturing Center" (OEPA premise number 0302020027) or any subsequent owner or operator of the "Joint Systems Manufacturing Center," Lima, Ohio shall not cause or permit the emission of sulfur dioxide from boiler numbers 4, 2 and 3 (OEPA source numbers B001 through B003); to exceed a maximum of 4.5 pounds of sulfur dioxide per MM Btu actual heat input from each boiler.

Effective: 02/17/2011

R.C. 119.032 review dates: 11/30/2010 and 11/30/2015

CERTIFIED ELECTRONICALLY
Certification

02/07/2011
Date

Promulgated Under: 119.03
Statutory Authority: 3704.03(E)
Rule Amplifies: 3704.02(A), 3704.03(E)
Prior Effective Dates: 12/28/79, 3/27/06

3745-18-09 **Ashland county emission limits.**

No owner or operator of any coal-fired steam generating unit shall cause or permit the emission of sulfur dioxide from any source to exceed a maximum of 7.2 pounds of sulfur dioxide per MM Btu actual heat input.

Effective: 02/17/2011

R.C. 119.032 review dates: 11/30/2010 and 11/30/2015

CERTIFIED ELECTRONICALLY
Certification

02/07/2011
Date

Promulgated Under: 119.03
Statutory Authority: 3704.03(E)
Rule Amplifies: 3704.03(A), 3704.03(E)
Prior Effective Dates: 12/28/79

3745-18-10 **Ashtabula county emissions limits.**

(A) No owner or operator of any coal-fired steam generating unit, unless otherwise specified below, shall cause or permit the emission of sulfur dioxide from any source to exceed a maximum of 7.2 pounds of sulfur dioxide per MM Btu actual heat input.

(B) The "Millenium Inorganic Chemicals, Inc.- Plant 2" (OEPA premise number 0204010193) or subsequent owner or operator of the "Millenium Inorganic Chemicals, Inc.- Plant 2" facilty located on Middle Road, Ashtabula, Ohio shall not cause or permit the emission of sulfur dioxide from boiler BF-101 (OEPA source number B004) to exceed a maximum of 5.9 pounds of sulfur dioxide per MM Btu actual heat input.

(C) [Reserved]

(D) [Reserved]

(E) The "Cleveland Electric Illuminating Company, Ashtabula Plant" (OEPA premise number 0204010000) or any subsequent owner or operator of the "Cleveland Electric Illuminating Company, Ashtabula Plant" facility located at 2133 Lake Road, Ashtabula, Ohio shall not cause or permit the emission of sulfur dioxide from the following sources to exceed the amounts indicated:

(1) Boiler numbers 1 through 6 (OEPA source numbers B001 through B006); a maximum of 2.4 pounds of sulfur dioxide per MM Btu actual heat input from each boiler.

(2) Package boiler (OEPA source number B007); a maximum of 2.4 pounds of sulfur dioxide per MM Btu actual heat input.

(3) Boiler 7 unit number 5 (OEPA source number B008); a maximum of 9.1 pounds of sulfur dioxide per MM Btu actual heat input.

(F) [Reserved]

(G) The "United States Steel Corporation, Conneaut Plant" (OEPA premise number 0204020081) or any subsequent owner or operator of the "United States Steel Corporation, Conneaut Plant" facility located in Conneaut, Ohio shall not cause or permit the emission of sulfur dioxide from the limestone dryer (OEPA source number P004) to exceed a maximum of 0.45 pounds of sulfur dioxide per ton of process weight.

(H) The "Elkem Metals Company" (OEPA premise number 0204010003) or any subsequent owner or operator of the "Elkem Metals Company" facility located in Ashtabula, Ohio shall not cause or permit the emission of sulfur dioxide from the

vertical lime kiln numbers 3 and 2 (OEPA source numbers P009, P010) to exceed a maximum of 3.1 pounds of sulfur dioxide per ton of process weight input.

Effective: 02/17/2011

R.C. 119.032 review dates: 11/30/2010 and 11/30/2015

CERTIFIED ELECTRONICALLY
Certification

02/07/2011
Date

Promulgated Under: 119.03
Statutory Authority: 3704.03(E)
Rule Amplifies: 3704.03(A), 3704.03(E)
Prior Effective Dates: 12/28/79, 1/23/06

3745-18-11 **Athens county emission limits.**

(A) No owner or operator of any coal-fired steam generating unit, unless otherwise specified in this rule, shall cause or permit the emission of sulfur dioxide from any source to exceed a maximum of 4.5 pounds of sulfur dioxide per MM Btu actual heat input.

(B) [Reserved]

(C) The "Ohio University-Lausche Heating Plant" (OEPA premise number 0605010016) or any subsequent owner or operator of the "Ohio University-Lausche Heating Plant, Factory Street, Athens, Ohio" shall not cause or permit the emission of sulfur dioxide from boiler numbers 136641, 136642, and 136643 (OEPA source numbers B041 through B043) to exceed a maximum of 4.7 pounds of sulfur dioxide per MM Btu actual heat input from each boiler.

Replaces: 3745-18-11

Effective: 02/17/2011

R.C. 119.032 review dates: 11/30/2015

CERTIFIED ELECTRONICALLY
Certification

02/07/2011
Date

Promulgated Under: 119.03
Statutory Authority: 3704.03(E)
Rule Amplifies: 3704.03(A), 3704.03(E)
Prior Effective Dates: 12/28/79, 6/15/89, 1/23/06

3745-18-12 **Auglaize county emission limits.**

(A) No owner or operator of any coal-fired steam generating unit, unless otherwise specified in this rule, shall cause or permit the emission of sulfur dioxide from any source to exceed a maximum of 2.6 pounds of sulfur dioxide per MM Btu actual heat input.

(B) The "St. Marys Municipal Light and Power" (OEPA premise number 0306010010) or any subsequent owner or operator of the "St. Marys Municipal Light and Power" facility located at 101 East Spring Street, St. Marys, Ohio shall not cause or permit the emission of sulfur dioxide from boiler numbers 6 and 5 (OEPA source numbers B001 and B002) to exceed a maximum of 5.9 pounds of sulfur dioxide per MM Btu actual heat input.

(C) The "Goodyear Tire & Rubber Company" (OEPA premise number 0306010138) or any subsequent owner or operator of the "Goodyear Tire & Rubber Company" facility located on South Wayne Street, St. Marys, Ohio shall not cause or permit the emission of sulfur dioxide from the following sources to exceed the amounts indicated:

(1) Boiler numbers 3, 5, and 6 (OEPA source numbers B003, B005, and B007); a maximum of 4.2 pounds of sulfur dioxide per MM Btu actual heat input from each boiler.

(2) Boiler numbers 1, 2, and 4 (OEPA source numbers B001, B002, and B004); a maximum of 0.0 pounds of sulfur dioxide per MM Btu actual heat input from each boiler.

Effective: 02/17/2011

R.C. 119.032 review dates: 11/30/2010 and 11/30/2015

CERTIFIED ELECTRONICALLY
Certification

02/07/2011
Date

Promulgated Under: 119.03
Statutory Authority: 3704.03(E)
Rule Amplifies: 3704.03(A), 3704.03(E)
Prior Effective Dates: 12/28/79, 1/23/06

3745-18-13 **Belmont county emission limits.**

(A) No owner or operator of any coal-fired steam generating unit, unless otherwise specified below, shall cause or permit the emission of sulfur dioxide from any source to exceed a maximum of 4.5 pounds of sulfur dioxide per MM Btu actual heat input.

(B) The "Ohio Edison Company, R.E. Burger Plant" (OEPA premise number 0607130015) or any subsequent owner or operator of the "Ohio Edison Company, R.E. Burger Plant" facility located in Shadyside, Ohio shall not cause or permit the emission of sulfur dioxide from the following sources to exceed the amounts indicated:

(1) Diesel numbers A, B1, and B2 (OEPA source numbers B001, B002, and B003); a maximum of 1.2 pounds of sulfur dioxide per MM Btu actual heat input from each diesel.

(2) Auxiliary heating boiler (OEPA source number B004); A maximum of 1.2 pounds of sulfur dioxide per MM Btu actual heat input.

(3) Boiler numbers 1 through 8 (OEPA source numbers B005 through B012); a maximum of 9.02 pounds of sulfur dioxide per MM Btu actual heat input from each boiler.

(C) The "Wheeling-Pittsburgh Steel Corporation" (OEPA premise number 0607090013) or any subsequent owner or operator of the "Wheeling-Pittsburgh Steel Corporation" facility located in Martins Ferry, Ohio shall not cause or permit the emission of sulfur dioxide from the following sources to exceed the amounts indicated and shall limit the operation of said sources such that the indicated average operating rates are not exceeded for any calendar day:

(1) Boiler number 1 (OEPA source number B001); a maximum of 5.78 pounds of sulfur dioxide per MM Btu actual heat input.

(2) Boiler numbers 2, 3, and 4 (OEPA source numbers B002 through B004); a maximum of 5.78 pounds of sulfur dioxide per MM Btu actual heat input.

Effective: 02/17/2011

R.C. 119.032 review dates: 11/30/2010 and 11/30/2015

CERTIFIED ELECTRONICALLY
Certification

02/07/2011
Date

Promulgated Under: 119.03
Statutory Authority: 3704.03(E)
Rule Amplifies: 3704.03(A), 3704.03(E)
Prior Effective Dates: 12/28/79

3745-18-14 **Brown county emission limits.**

No owner or operator of any coal-fired steam generating unit shall cause or permit the emission of sulfur dioxide from any source to exceed a maximum of 3.6 pounds of sulfur dioxide per MM Btu actual heat input.

Effective: 02/17/2011

R.C. 119.032 review dates: 11/30/2010 and 11/30/2015

CERTIFIED ELECTRONICALLY
Certification

02/07/2011
Date

Promulgated Under: 119.03
Statutory Authority: 3704.03(E)
Rule Amplifies: 3704.03(A), 3704.03(E)
Prior Effective Dates: 12/28/79

3745-18-15 **Butler county emission limits.**

(A) No owner or operator of any coal-fired steam generating unit, unless otherwise specified below, shall cause or permit the emission of sulfur dioxide from any source to exceed a maximum of 2.4 pounds of sulfur dioxide per MM Btu actual heat input.

(B) [Reserved]

(C) The "AK Steel Corporation, Middletown Works" (OEPA premise number 1409010006) or any subsequent owner or operator of the "AK Steel Corporation, Middletown Works, Crawford Street, Middletown, Ohio" shall not cause or permit the emission of sulfur dioxide from the following sources to exceed the amounts indicated:

(1) Boiler numbers 1 through 4 (OEPA source numbers B007 through B010); a maximum of 0.90 pounds of sulfur dioxide per MM Btu actual heat input from each boiler.

(2) Slab furnace numbers 1 through 4 (OEPA source numbers P009 through P012); a maximum of 1.1 pounds of sulfur dioxide per MM Btu actual heat input from each furnace.

(3) Number 2 coke plant (OEPA source number B918);

(a) From the combustion of coke oven gas containing hydrogen sulfide, two hundred eighty grains of hydrogen sulfide per one hundred dry standard cubic feet of coke oven gas; and,

(b) From the production of sulfuric acid at the acid plant, a maximum of 26.0 pounds of sulfur dioxide per ton of one hundred per cent acid produced. Operation of the acid plant shall not be required to control emissions from the coke plant as long as coke plant emissions are in compliance with paragraph (C)(3)(a) of this rule.

(4) Number 3 coke plant (OEPA source number B919); from the combustion of coke oven gas containing hydrogen sulfide, one hundred grains of hydrogen sulfide per one hundred dry standard cubic feet of coke oven gas.

(5) Sinter recovery plant (OEPA source number P908); a maximum of 9.8 pounds of sulfur dioxide per ton of product.

(6) Number eighty-four building annealing furnaces, open coil annealing furnaces and number sixty-four building annealing furnaces (OEPA source numbers B021 through B023); a maximum of 0.50 pounds of sulfur dioxide per MM Btu actual heat input.

(7) Number ninety-four building annealing furnaces (OEPA source number B026); a maximum of 1.6 pounds of sulfur dioxide per MM Btu actual heat input from each furnace.

(8) Coke oven gas holder/flare (OEPA source number P067); from the combustion of coke oven gas containing hydrogen sulfide, two hundred eighty grains of hydrogen sulfide per one hundred dry standard cubic feet of coke oven gas.

(9) Hot metal desulfurization station (OEPA source number P956); 0.29 pounds of sulfur dioxide per ton of product from the station, and the station is not to be operated simultaneously with P047.

(10) Molten iron transfer and desulfurization station (OEPA source number P047); 0.40 pounds of sulfur dioxide per ton of product from the station, and the station is not to be operated simultaneously with P956.

(D) [Reserved]

(E) The "Smurfit-Stone Corporation, Middletown Mill" (OEPA premise number 1409010021) or any subsequent owner or operator of the "Smurfit-Stone Corporation, Middletown Mill, 407 Charles Street, Middletown, Ohio" shall not cause or permit the emission of sulfur dioxide from the following sources to exceed the amounts indicated and shall use a stack no lower than the height indicated:

(1) Boiler number two hundred five (OEPA source number B003); a maximum of 1.6 pounds of sulfur dioxide per MM Btu actual heat input and a minimum stack height of one hundred twenty feet above ground level.

(2) Boiler number three hundred fifteen (OEPA source number B004); a maximum of 0.31 pounds of sulfur dioxide per MM Btu actual heat input.

(F) "Mosinee Holdings, Incorporated" (OEPA premise number 1409010043) or any subsequent owner or operator of "Mosinee Holdings, Incorporated, 901 Manchester Avenue, Middletown, Ohio" shall not cause or permit the emission of sulfur dioxide from boiler numbers 1 through 4 (OEPA source numbers B001 through B004) to exceed a maximum of 1.4 pounds of sulfur dioxide per MM Btu actual heat input from each boiler and shall use a stack no lower than two hundred feet above ground level for each boiler.

(G) [Reserved]

(H) The "Cincinnati Gas and Electric Company, Dick's Creek Station" (OEPA premise number 1409010078) or any subsequent owner or operator of the "Cincinnati Gas and Electric Company, Dick's Creek Station, 632 Todhunter Road, Middletown,

Ohio" shall not cause or permit the emission of sulfur dioxide from the following sources to exceed the amounts indicated:

(1) Unit numbers 1 and 3 through 5 (OEPA source numbers B001 and B003 through B005); a maximum of 0.5 pounds of sulfur dioxide per MM Btu actual heat input from each unit.

(I) [Reserved]

(J) The "Mohawk Fine Papers, Inc. - Becket Mill" (OEPA premise number 1409040014) or any subsequent owner or operator of the "Mohawk Fine Papers, Inc. - Becket Mill, Fourth and Buckeye Streets, Hamilton, Ohio" shall not cause or permit the emission of sulfur dioxide from the following sources to exceed the amounts indicated and shall limit the operation of said sources such that the indicated average operating rates are not exceeded for any calendar day:

(1) Boiler numbers 1 and 2 (OEPA source numbers B001 and B002); a maximum of 0.0 pounds of sulfur dioxide per MM Btu actual heat input from each boiler.

(2) Boiler number 3 (OEPA source number B003); a maximum of 0.29 pounds of sulfur dioxide per MM Btu actual heat input and the average operating rate of twenty seven MM Btu per hour.

(3) Boiler numbers 4 and 5 (OEPA source numbers B004 and B005); a maximum of 0.29 pounds of sulfur dioxide per MM Btu actual heat input from each boiler and the combined average operating rate of said boilers shall not exceed one hundred fifty-three MM Btu per hour.

(K) [Reserved]

(L) "Smart Papers" (OEPA premise number 1409040212) or any subsequent owner or operator of the "Smart Papers, 601 North 'B' Street, Hamilton, Ohio" shall not cause or permit the emission of sulfur dioxide from boiler numbers 10 and 14 (OEPA source numbers B010 and B020) to exceed a maximum of 1.7 pounds of sulfur dioxide per MM Btu actual heat input from each boiler and shall limit the operation such that a combined operating rate of six hundred and three MM Btu per hour is not exceeded for any calendar day.

(M) The "City of Hamilton" (OEPA premise number 1409040243) or any subsequent owner or operator of the "City of Hamilton, 960 North Third Street, Hamilton, Ohio" shall not cause or permit the emission of sulfur dioxide from the following sources to exceed the amounts indicated and shall limit the operation of said sources such that the indicated average operating rates are not exceeded for any calendar day:

(1) Boiler numbers 1 and 7 (OEPA source numbers B001 and B002); a maximum of 0.0 pounds of sulfur dioxide per MM Btu actual heat input from each boiler.

(2) Boiler number 8 (OEPA source number B008); a maximum of 1.45 pounds of sulfur dioxide per MM Btu actual heat input and average operating rate of three hundred twelve MM Btu per hour.

(3) Boiler number 9 (OEPA source number B009); a maximum of 1.2 pounds of sulfur dioxide per MM Btu actual heat input.

(4) Riley heat recovery boiler (OEPA source number B010); a maximum of 0.0 pounds of sulfur dioxide per MM Btu actual heat input.

(5) Gas/oil turbine peaking units (OEPA source numbers B003 and B004); a maximum of 0.5 pounds of sulfur dioxide per MM Btu actual heat input from each turbine.

(N) "Miami University" (OEPA premise number 1409090081) or any subsequent owner or operator of "Miami University, U.S. 27 and High Street, Oxford, Ohio" shall not cause or permit the emission of sulfur dioxide from boiler numbers 16268-1 through 16268-3 (OEPA source numbers B010 through B012) to exceed a maximum of 1.6 pounds of sulfur dioxide per MM Btu actual heat input from each boiler.

(O) "Miller Brewing Company" (OEPA premise number 1409000353) or any subsequent owner or operator of "Miller Brewing Company, 525 Wayne Madison Road, Trenton, Ohio" shall not cause or permit the emission of sulfur dioxide from the following sources to exceed the amounts indicated:

(1) Boiler numbers 1 and 2 (OEPA source numbers B001 and B002); a maximum of 1.6 pounds of sulfur dioxide per MM Btu actual heat input from each boiler.

(2) Boiler numbers 3A and 3B (OEPA source numbers B003 and B007); a maximum of 0.8 pounds of sulfur dioxide per MM Btu actual heat input from each boiler.

(P) "Cincinnati Gas and Electric Company, Woodsdale Generating Station" (OEPA premise number 1409120656) or any subsequent owner or operator of "Cincinnati Gas and Electric Company, Woodsdale Generating Station, 2100 Woodsdale Road, Trenton, Ohio" shall not cause or permit the emission of sulfur dioxide from combustion turbines numbers 1 through 12 (OEPA source numbers B001 through B012) to exceed a maximum of 0.5 pounds of sulfur dioxide per MM Btu actual heat input from each turbine.

(Q) "Inland Container Corporation" (OEPA premise number 1409010025) or any subsequent owner or operator of "Inland Container Corporation, 912 Nelbar Street, Middletown, Ohio" shall not cause or permit the emission of sulfur dioxide from boiler numbers 4 through 6 (OEPA source numbers B004 through B006) to exceed a maximum of 1.2 pounds of sulfur dioxide per MM Btu actual heat input from each boiler.

Effective: 02/17/2011

R.C. 119.032 review dates: 11/30/2010 and 11/30/2015

CERTIFIED ELECTRONICALLY
Certification

02/07/2011
Date

Promulgated Under: 119.03
Statutory Authority: 3704.03(E)
Rule Amplifies: 3704.03(A), 3704.03(E)
Prior Effective Dates: 12/28/79, 11/1/84, 5/11/87, 3/21/00, 3/27/06

3745-18-16 **Carroll county emission limits.**

No owner or operator of any coal-fired steam generating unit shall cause or permit the emission of sulfur dioxide from any source to exceed a maximum of 4.5 pounds of sulfur dioxide per MM Btu actual heat input.

Effective: 02/17/2011

R.C. 119.032 review dates: 11/30/2010 and 11/30/2015

CERTIFIED ELECTRONICALLY
Certification

02/07/2011
Date

Promulgated Under: 119.03
Statutory Authority: 3704.03(E)
Rule Amplifies: 3704.03(A), 3704.03(E)
Prior Effective Dates: 12/28/79

3745-18-17 **Champaign county emission limits.**

(A) No owner or operator of any coal-fired steam generating unit, unless otherwise specified below, shall cause or permit the emission of sulfur dioxide from any source to exceed a maximum of 3.6 pounds of sulfur dioxide per MM Btu actual heat input.

(B) The "Fox River Paper Co.-Howard Mill" (OEPA premise number 0511010001) or any subsequent owner or operator of the "Fox River Paper Co.-Howard Mill" facility located on West Church Street, Urbana, Ohio shall not cause or permit the emission of sulfur dioxide from the following sources to exceed the amounts indicated:

(1) Boiler number 1 (OEPA source number B001); a maximum of 1.2 pounds of sulfur dioxide per MM Btu actual heat input.

(2) Boiler number 2 (OEPA source number B002); a maximum of 1.2 pounds of sulfur dioxide per MM Btu actual heat input.

Effective: 02/17/2011

R.C. 119.032 review dates: 11/30/2010 and 11/30/2015

CERTIFIED ELECTRONICALLY
Certification

02/07/2011
Date

Promulgated Under: 119.03
Statutory Authority: 3704.03(E)
Rule Amplifies: 3704.03(A), 3704.03(E)
Prior Effective Dates: 12/28/79, 1/23/06

3745-18-18 **Clark county emission limits.**

(A) No owner or operator of any coal-fired steam generating unit, unless otherwise specified below shall cause or permit the emission of sulfur dioxide from any source to exceed a maximum of 3.6 pounds of sulfur dioxide per MM Btu actual heat input.

(B) [Reserved]

(C) The "Ohio Edison Company, Mad River Plant" (OEPA premise number 0812790035) or any subsequent owner or operator of the "Ohio Edison Company, Mad River Plant" facility located on West Main Street, Springfield, Ohio shall not cause or permit the emission of sulfur dioxide from the following sources to exceed the amounts indicated:

(1) Boiler numbers 1 through 4 (OEPA source numbers B001 through B004); a maximum of 4.6 pounds of sulfur dioxide per MM Btu actual heat input from each boiler.

(2) Combustion turbine numbers A and B (OEPA source numbers B005 and B006); a maximum of 1.0 pounds of sulfur dioxide per MM Btu actual heat input.

Effective: 02/17/2011

R.C. 119.032 review dates: 11/30/2010 and 11/30/2015

CERTIFIED ELECTRONICALLY
Certification

02/07/2011
Date

Promulgated Under: 119.03
Statutory Authority: 3704.03(E)
Rule Amplifies: 3704.03(A), 3704.03(E)
Prior Effective Dates: 12/28/79, 1/23/06

3745-18-19 **Clermont county emission limits.**

(A) No owner or operator of any coal-fired steam generating unit, unless otherwise specified below, shall cause or permit the emission of sulfur dioxide from any source to exceed a maximum of 3.6 pounds of sulfur dioxide per MM Btu actual heat input.

(B) The "Cincinnati Gas and Electric Company, W. C. Beckjord Station" (OEPA premise number 1813100008) or any subsequent owner or operator of the "Cincinnati Gas and Electric Company, W. C. Beckjord Station," New Richmond, Ohio shall not cause or permit the emission of sulfur dioxide from the following sources to exceed the amounts indicated:

(1) Boiler numbers 1 through 4 (OEPA source numbers B001 through B004); a maximum of 1.84 pounds of sulfur dioxide per MM Btu actual heat input from each boiler.

(2) Boiler numbers 5 and 6 (OEPA source numbers B005 and B006); a maximum of 7.19 pounds of sulfur dioxide per MM Btu actual heat input from each boiler.

(3) Turbine numbers 7 through 10 (OEPA source numbers B007 through B010); a maximum of 1.2 pounds of sulfur dioxide per MM Btu actual heat input from each turbine.

(C) The "Ford Motor Company" (OEPA premise number 1813000137) or any subsequent owner or operator of the "Ford Motor Company," Batavia, Ohio shall not cause or permit the emission of sulfur dioxide from boiler numbers 1, 2, and 3 (OEPA source numbers B001 through B003) to exceed a maximum of 1.6 pounds of sulfur dioxide per MM Btu actual heat input.

Effective: 02/17/2011

R.C. 119.032 review dates: 11/30/2010 and 11/30/2015

CERTIFIED ELECTRONICALLY
Certification

02/07/2011
Date

Promulgated Under: 119.03
Statutory Authority: 3704.03(E)
Rule Amplifies: 3704.03(A), 3704.03(E)
Prior Effective Dates: 12/28/79, 5/11/87

3745-18-20 **Clinton county emission limits.**

No owner or operator of any coal-fired steam generating unit shall cause or permit the emission of sulfur dioxide from any source to exceed a maximum of 3.6 pounds of sulfur dioxide per MM Btu actual heat input.

Effective: 02/17/2011

R.C. 119.032 review dates: 11/30/2010 and 11/30/2015

CERTIFIED ELECTRONICALLY
Certification

02/07/2011
Date

Promulgated Under: 119.03
Statutory Authority: 3704.03(E)
Rule Amplifies: 3704.03(A), 3704.03(E)
Prior Effective Dates: 12/28/79

3745-18-21 **Columbiana county emission limits.**

No owner or operator of any coal-fired steam generating unit shall cause or permit the emission of sulfur dioxide from any source to exceed a maximum of 4.4 pounds of sulfur dioxide per MM Btu actual heat input.

Replaces: 3745-18-21

Effective: 02/17/2011

R.C. 119.032 review dates: 11/30/2015

CERTIFIED ELECTRONICALLY
Certification

02/07/2011
Date

Promulgated Under: 119.03
Statutory Authority: 3704.03(E)
Rule Amplifies: 3704.03(A), 3704.03(E)
Prior Effective Dates: 12/28/79

3745-18-22 **Coshocton county emission limits.**

(A) No owner or operator of any coal-fired steam generating unit, unless otherwise specified below, shall cause or permit the emission of sulfur dioxide from any source to exceed a maximum of 4.5 pounds of sulfur dioxide per MM Btu actual heat input.

(B) The "Columbus Southern Power Company, Conesville Generating Station" (OEPA premise number 0616000000) or any subsequent owner or operator of the "Columbus Southern Power Company, Conesville Generating Station," Conesville, Ohio shall not cause or permit the emission of sulfur dioxide from the following sources to exceed the amount indicated:

(1) Conesville numbers 1 through 4 (OEPA source numbers B001 through B004); a maximum of 5.66 pounds of sulfur dioxide per MM Btu actual heat input from each boiler.

(2) Conesville numbers 5 and 6 (OEPA source numbers B007 and B008); a maximum of 1.2 pounds of sulfur dioxide per MM Btu actual heat input from each boiler.

(3) Diesel numbers 1 through 3 (OEPA source numbers B006, B009 and B010); a maximum of 0.52 pounds of sulfur dioxide per MM Btu actual heat input from each diesel.

(4) Auxiliary boiler number 4 (OEPA source number B005); a maximum of 0.52 pounds of sulfur dioxide per MM Btu actual heat input.

(C) The "St. Regis Paper Company" (OEPA premise number 0616010028) or any subsequent owner or operator of the "St. Regis Paper Company, Papermill Road, Coshocton, Ohio" shall not cause or permit the emission of sulfur dioxide from boiler number 4 (OEPA source number B003); a maximum of 1.2 pounds of sulfur dioxide per MM Btu actual heat input.

Effective: 02/17/2011

R.C. 119.032 review dates: 11/30/2010 and 11/30/2015

CERTIFIED ELECTRONICALLY
Certification

02/07/2011
Date

Promulgated Under: 119.03
Statutory Authority: 3704.03(E)
Rule Amplifies: 3704.03(A), 3704.03(E)
Prior Effective Dates: 12/28/79, 6/15/89, 3/21/00

3745-18-23 **Crawford county emission limits.**

(A) No owner or operator of any coal-fired steam generating unit, unless otherwise specified below, shall cause or permit the emission of sulfur dioxide from any source to exceed a maximum of 2.6 pounds of sulfur dioxide per MM Btu actual heat input.

(B) The "Timken Company" (OEPA premise number 0317010168) or any subsequent owner or operator of the "Timken Company" facility located on Route 30 North, Bucyrus, Ohio shall not cause or permit the emission of sulfur dioxide from boiler numbers 1 and 2 (OEPA source numbers B001 and B002) to exceed a maximum of 9.6 pounds of sulfur dioxide per MM Btu actual heat input from each boiler.

(C) The "Cobey Company" (OEPA premise number 0317010193) or any subsequent owner or operator of the "Cobey Company" facility located on Hopley Avenue, Bucyrus, Ohio shall not cause or permit the emission of sulfur dioxide from two "Union Iron" boilers (OEPA source number B001 to exceed a maximum of 0.0 pounds of sulfur dioxide per MM Btu actual heat input.

Effective: 02/17/2011

R.C. 119.032 review dates: 11/30/2010 and 11/30/2015

CERTIFIED ELECTRONICALLY
Certification

02/07/2011
Date

Promulgated Under: 119.03
Statutory Authority: 3704.03(E)
Rule Amplifies: 3704.03(A), 3704.03(E)
Prior Effective Dates: 12/28/79

3745-18-24 **Cuyahoga county emission limits.**

(A) No owner or operator of any coal-fired steam generating unit greater than three hundred fifty MM Btu actual heat input, unless otherwise specified in this rule, shall cause or permit the emission of sulfur dioxide from any source to exceed a maximum of 1.2 pounds of sulfur dioxide per MM Btu actual heat input.

(B) No owner or operator of any coal-fired steam generating unit between ten MM Btu per hour and three hundred fifty MM Btu per hour, unless otherwise specified in this rule, shall cause or permit the emission of sulfur dioxide from any source to exceed the following equation:

$$EL = 7.014\ Q_m^{-0.3014}$$

where Q_m is the total rated capacity of heat input in MM Btu per hour and EL is the allowable emission rate in pounds of sulfur dioxide per Btu actual heat input.

(C) The "ISG Cleveland Inc." (OEPA premise number 1318001613) or any subsequent owner or operator of the "ISG Cleveland Inc., 3060 Eggers Avenue, Cleveland, Ohio" shall not cause or permit the emission of sulfur dioxide from the following source to exceed the amounts indicated:

(1) Boiler numbers 24 through 34 (OEPA source numbers B002 through B012); a maximum of 0.024 pound of sulfur dioxide per MM Btu actual heat input from each boiler.

(2) 80 inch hot strip mill furnace numbers 1 through 3 (OEPA source numbers P001 through P003); a maximum of 0.024 pound of sulfur dioxide per MM Btu actual heat input from each furnace.

(3) Stoves for blast furnace number C-3 (OEPA source number P902); a maximum of 0.024 pound of sulfur dioxide per MM Btu actual heat input from each stove.

(4) Stoves for blast furnace number C-1 (OEPA source number P903); a maximum of 0.15 pound of sulfur dioxide per MM Btu actual heat input from each stove.

(D) [Reserved]

(E) The "Zalcon, LLC" (OEPA premise number 1318000151) or any subsequent owner or operator of the "Zalcon, LLC, 2981 Independence Road, Cleveland, Ohio" shall not cause or permit the emission of sulfur dioxide from the following source to exceed the amounts indicated:

(1) Sulfur burning contact process (OEPA source number P001); a maximum of 0.0 pounds of sulfur dioxide per ton of one hundred per cent acid produced.

(2) Boiler number 18 (OEPA source number B001) a maximum of 1.2 pounds of sulfur dioxide per MM Btu actual heat input.

(F) [Reserved]

(G) The "Cleveland Thermal, LLC" (OEPA premise number 1318000244) or any subsequent owner or operator of the "Cleveland Thermal, LLC, 2274 Canal Road, Cleveland, Ohio" shall not cause or permit the emission of sulfur dioxide from boiler numbers 34 through 38 (OEPA source numbers B001 through B005) to exceed a maximum of 1.38 pounds of sulfur dioxide per MM Btu actual heat input from each boiler.

(H) The "Cleveland Thermal, LLC" (OEPA premise number 1318000246) or any subsequent owner or operator of the "Cleveland Thermal, LLC, 1901 Hamilton Avenue, Cleveland, Ohio" shall not cause or permit the emission of sulfur dioxide from boiler numbers 1 through 6 (OEPA source numbers B001 through B006) to exceed a maximum of 1.0 pound of sulfur dioxide per MM Btu actual heat input from each boiler.

(I) [Reserved]

(J) [Reserved]

(K) [Reserved]

(L) [Reserved]

(M) The "NASA John H. Glenn Research Center" (OEPA premise number 1318001169) or any subsequent owner or operator of the "NASA John H. Glenn Research Center, 21000 Brookpark Road, Cleveland, Ohio" shall not cause or permit the emission of sulfur dioxide from the following sources to exceed the amount indicated:

(1) Boiler numbers 1 and 2 (OEPA source numbers B001 and B002); a maximum of 2.8 pounds of sulfur dioxide per MM Btu actual heat input from each boiler.

(2) Boiler numbers 4 and 5 (OEPA source numbers B004 and B005); a maximum of 1.2 pounds of sulfur dioxide per MM Btu actual heat input from each boiler.

(N) The "Metal Blast, Incorporated" (OEPA premise number 1318001716) or any subsequent owner or operator of the "Metal Blast, Incorporated, 871 East 67th Street, Cleveland, Ohio" shall not cause or permit the emission of sulfur dioxide from the Whiting model number 7 cupola (OEPA source number P001) to exceed a maximum of 0.0 pounds of sulfur dioxide per ton of metal charged.

(O) The "ISG Cleveland Inc." (OEPA premise number 1318001613) or any subsequent owner or operator of the "ISG Cleveland Inc., 3060 Eggers Avenue, Cleveland, Ohio" shall not cause or permit the emission of sulfur dioxide from the following sources to exceed the maximum amounts indicated, and shall limit the operation of said sources such that the indicated average sulfur dioxide emission rates are not exceeded for any calendar day:

(1) Boiler numbers A, B and C (OEPA source numbers B001, B002 and B003); a maximum of 0.99 pound of sulfur dioxide per MM Btu actual heat input from each boiler and a daily average not to exceed eight hundred twenty-eight pounds of sulfur dioxide per hour from all three boilers.

(2) Boiler number D (OEPA source number B004); a maximum of 2.45 pounds of sulfur dioxide per MM Btu actual heat input and a daily average not to exceed one thousand fifty-six pounds of sulfur dioxide per hour.

(3) Boiler numbers 1 and 2 (OEPA source numbers B005 and B006); a maximum of 1.64 pounds of sulfur dioxide per MM Btu actual heat input from each boiler and a daily average not to exceed three hundred fifteen pounds of sulfur dioxide per hour from both boilers.

(4) Boiler number 3 (OEPA source number B007); a maximum of 2.39 pounds of sulfur dioxide per MM Btu actual heat input and a daily average not to exceed six hundred eighty-six pounds of sulfur dioxide per hour.

(5) 84 inch hot slab mill furnace numbers 1, 2 and 3 (OEPA source numbers P046, P047 and P048); a maximum of 1.26 pounds of sulfur dioxide per MM Btu actual heat input from each furnace and a daily average not to exceed one thousand three hundred sixty-five pounds of sulfur dioxide per hour from all furnaces.

(6) Boiler number 234 (OEPA source number B009);

Stoves for blast furnace numbers C-2 and C-4 (OEPA source numbers P901 and P902);

84 inch north and south anneal furnaces (OEPA source numbers P049 and P050);

"P" anneal furnaces (OEPA source number P053); and

Car thaw for coke battery numbers 6 and 7 (OEPA source numbers B905 and B906);

A maximum of 0.024 pound of sulfur dioxide per MM Btu actual heat input from each unit.

(7) 44 inch mill soaking pit numbers 2 through 8 (OEPA source numbers P027 through P021);

45 inch mill soaking pit numbers 11 through 15 (OEPA source numbers P018 through P014);

Basic oxygen furnace shop number 2 (OEPA source numbers P905 and P906);

Coke oven battery numbers 1 through 4 (OEPA source numbers B901 through B904); and

Car thaw for coke battery numbers 1 through 4 (OEPA source numbers B901 through B904);

From the combustion of coke oven gas containing hydrogen sulfide, a maximum of twenty grains of hydrogen sulfide per one hundred dry standard cubic feet of coke oven gas.

(8) Casthouses for blast furnace numbers C-5 and C-6 (OEPA source numbers P903 and P904); from the combustion of coke oven gas containing hydrogen sulfide, a maximum of three hundred ninety grains of hydrogen sulfide per one hundred dry standard cubic feet of coke oven gas, and the daily average not to exceed thirty-three pounds of sulfur dioxide per hour from the casthouses for either blast furnace.

(9) Stoves for blast furnace numbers C-5 and C-6 (OEPA source numbers P903 and P904); from the combustion of coke oven gas containing hydrogen sulfide, a maximum of three hundred ninety grains of hydrogen sulfide per one hundred dry standard cubic feet of coke oven gas, and the daily average not to exceed fifty-three pounds of sulfur dioxide per hour from the stoves for either blast furnace.

(10) Coke oven battery number 7 (OEPA source number B906); from the combustion of coke oven gas containing hydrogen sulfide, a maximum of three hundred ninety grains of hydrogen sulfide per one hundred dry standard cubic feet of coke oven gas, and the maximum production of hydrogen sulfide in coke oven gas shall not exceed three hundred fifteen pounds of hydrogen sulfide per hour.

(11) Claus desulfurization plant for coke oven battery number 1 (OEPA source number B901); a daily average not to exceed seventy-eight pounds of sulfur dioxide per hour.

(12) 10 inch bar mill reheat furnace (OEPA source number P013);

12 inch bar mill reheat furnace (OEPA source number P012);

98 inch slab mill furnace numbers 1 through 5 (OEPA source numbers P039 through P043);

Open hearth plant (OEPA source numbers P028 through P031); and

Sinter plant (OEPA source number P003);

A maximum of 0.0 pound of sulfur dioxide per MM Btu actual heat input from each unit.

(13) In addition to the provisions of paragraphs (N)(1), (N)(2) and (N)(14) of this rule, powerhouse number 1, comprised of boiler numbers A through D (OEPA source numbers B001 through B004), shall be limited to the emission of sulfur dioxide not to exceed a daily average of one thousand two hundred fifty-eight pounds of sulfur dioxide per hour from all boilers.

(14) In addition to the provisions of paragraphs (N)(1) to (N)(4) and (N)(13) of this rule, powerhouse numbers 1 and 3, comprised of boiler numbers A through D and 1 through 3 (OEPA source numbers B001 through B007), shall be limited to the emission of sulfur dioxide not to exceed a daily average of one thousand nine hundred fifty-eight pounds of sulfur dioxide per hour from all boilers.

(15) Coke oven battery number 6 (OEPA source number B905); from the combustion of coke oven gas containing hydrogen sulfide, a maximum of 0.0 grains of hydrogen sulfide per one hundred dry standard cubic feet of coke oven gas and the maximum production of hydrogen sulfide in coke oven gas shall not exceed two hundred sixty five pounds of hydrogen sulfide per hour.

(16) From the combustion of fuel oil at any source during any calendar day when coke oven gas is combusted at the facility, a maximum of 0.525 pounds of sulfur per MM Btu heat content.

(P) The "McGeon-Rohco, Inc." (OEPA premise number 1318365229) or any subsequent owner or operator of the "McGeon-Rohco, Inc., 2910 Harvard Avenue, Cuyahoga Heights, Ohio" shall not cause or permit the emission of sulfur dioxide from the following sources to exceed the amounts indicated:

(1) Boiler number 1 (OEPA source number B001); a maximum of 2.7 pounds of sulfur dioxide per MM Btu actual heat input.

(2) Process number 1 (OEPA source number P016); a maximum of 0.0 pound of sulfur dioxide per ton of actual process weight input.

(Q) The "Aluminum Company of America" (OEPA premise number 1318170314) or any subsequent owner or operator of the "Aluminum Company of America, 1600 Harvard Avenue, Cuyahoga Heights, Ohio" shall not cause or the emission of sulfur dioxide from boiler numbers 1 through 5 (OEPA source numbers B001 through B005) to exceed a maximum of 5.2 pounds of sulfur dioxide per MM Btu actual heat input from each boiler.

(R) The "Standard Oil Company (Ohio), Cleveland Asphalt Plant" (OEPA premise number 1318001871) or any subsequent owner or operator of the "Standard Oil Company (Ohio), Cleveland Asphalt Plant, 2635 Broadway Avenue, Cleveland, Ohio" shall not cause or permit the emission of sulfur dioxide from boiler numbers 7, 9, and 10 (OEPA source numbers B002, B003, and B004) to exceed 0.0 pounds of sulfur dioxide per MM Btu actual heat input from each boiler.

(S) [Reserved]

(T) The "Polyclinic Hospital" (OEPA premise number 1318004505) or any subsequent owner or operator of the "Polyclinic Hospital, 6605 Carnegie Avenue, Cleveland, Ohio" shall not cause or permit the emission of sulfur dioxide from boiler numbers 1 and 2 (OEPA source numbers B001 and B002) to exceed a maximum of 5.7 pounds of sulfur dioxide per MM Btu actual heat input from each boiler.

(U) The "Independent Towel Supply Company" (OEPA premise number 1318002816) or any subsequent owner or operator of the "Independent Towel Supply Company", 1802 Central Avenue, Cleveland, Ohio" shall not cause or permit the emission of sulfur dioxide from boiler numbers 1 and 3 (OEPA source numbers B002 and B003) to exceed 3.2 pounds of sulfur dioxide per MM Btu actual heat input from each boiler.

(V) The "Medical Center Company" (OEPA premise number 1318003059) or any subsequent owner or operator of the "Medical Center Company, 2250 Circle Drive, Cleveland, Ohio" shall not cause or permit the emission of sulfur dioxide from the following sources to exceed the amounts indicated:

(1) New boiler numbers 1 and 2 (OEPA source numbers B003 and B004); a maximum of 4.6 pounds of sulfur dioxide per MM Btu actual heat input from each boiler.

(2) Old boiler numbers 3 through 8 (OEPA source numbers B005 through B008); a maximum of 0.0 pounds of sulfur dioxide per MM Btu actual heat input from each boiler.

(W) [Reserved]

(X) The "Cleveland Water Department, Division Pumping Station" (OEPA premise number 1318002490) or any subsequent owner or operator of the "Cleveland Water

Department, Division Pumping Station 1245 West 45th Street, Cleveland, Ohio" shall not cause or permit the emission of sulfur dioxide from boiler numbers 1 through 6 (OEPA source numbers B001 through B006) to exceed 4.20 pounds of sulfur dioxide per MM Btu actual heat input from each boiler.

(Y) The "V.A. Medical Center" (OEPA premise number 1318083522) or any subsequent owner or operator of the "V.A. Medical Center, 1000 Brecksville Road, Brecksville, Ohio" shall not cause or permit the emission of sulfur dioxide from boiler numbers 1 through 3 (OEPA source numbers B001 through B003) to exceed a maximum of 2.8 pounds of sulfur dioxide per MM Btu actual heat input from each boiler.

(Z) The "Ford Motor Company, Cleveland Casting Plant" (OEPA premise number 1318120180) or any subsequent owner or operator of the "Ford Motor Company, Cleveland Casting Plant, 5600 Henry Ford Boulevard, Brookpark, Ohio" shall not cause or permit the emission of sulfur dioxide from boiler numbers 1 through 5 (OEPA source numbers B020 through B024) to exceed a maximum of 4.2 pounds of sulfur dioxide per MM Btu actual heat input from each boiler.

(AA) The "Ford Motor Company, Cleveland Casting Plant" (OEPA premise number 1318120180) or any subsequent owner or operator of the "Ford Motor Company, Cleveland Casting Plant, 5600 Engle Road, Brookpark, Ohio" shall not cause or permit the emission of sulfur dioxide from numbers 1 through 7 cupola (OEPA source numbers P011 through P017) to exceed a maximum of 6.0 pounds of sulfur dioxide per ton of actual process weight input.

(BB) [Reserved]

(CC) The "General Electric Power Plant" (OEPA premise number 1318182623) or any subsequent owner or operator of the "General Electric Power Plant, Nela Park, East Cleveland, Ohio" shall not cause or permit the emission of sulfur dioxide from boiler numbers 1 and 4 (OEPA source numbers B001 and B004) to exceed a maximum of 1.6 pounds of sulfur dioxide per MM Btu actual heat input from each boiler.

(DD) The "General Electric Company" (OEPA premise number 1318200203) or any subsequent owner or operator of the "General Electric Company, 21800 Tungsten Road, Euclid, Ohio" shall not cause or permit the emission of sulfur dioxide from the following sources to exceed the amounts indicated:

(1) Boiler number 1 (OEPA source number B001); a maximum of 1.00 pound of sulfur dioxide per MM Btu actual heat input.

(2) Boiler number 4 (OEPA source number B004); a maximum of 1.6 pounds of sulfur dioxide per MM Btu actual heat input.

(EE) The "Addressograph Multigraph" (OEPA premise number 1318201633) or any subsequent owner or operator of the "Addressograph Multigraph, 1200 Babbitt Road,

Euclid, Ohio" shall not cause or permit the emission of sulfur dioxide from boiler numbers 1 through 3 (OEPA source numbers B001 through B003) to exceed a maximum of 0.0 pounds of sulfur dioxide per MM Btu actual heat input from each boiler.

(FF) The "Lincoln Electric Company" (OEPA premise number 1318202137) or any subsequent owner or operator of the "Lincoln Electric Company, 22801 St. Clair Avenue, Cleveland, Ohio" shall not cause or permit the emission of sulfur dioxide from boiler numbers 2 through 4 (OEPA source numbers B002 through B004) to exceed a maximum of 4.5 pounds of sulfur dioxide per MM Btu actual heat input from each boiler.

(GG) [Reserved]

(HH) The "Lear Siegler, Incorporated" (OEPA premise number 1318311012) or any subsequent owner or operator of the "Lear Siegler, Incorporated, 17600 Broadway, Maple Heights, Ohio" shall not cause or permit the emission of sulfur dioxide from boiler number 1 (OEPA source number B001) to exceed a maximum of 0.0 pounds of sulfur dioxide per MM Btu actual heat input.

(II) The "GMC MFD Parma Plant" (OEPA premise number 1318451029) or any subsequent owner or operator of the "GMC MFD Parma Plant, Stumph Road and Brookpark, Parma, Ohio" shall not cause or permit the emission of sulfur dioxide from the following sources to exceed the amounts indicated:

(1) Boiler numbers 1 and 2 (OEPA source numbers B001 and B002); a maximum of 1.53 pounds of sulfur dioxide per MM Btu actual heat input from each boiler.

(2) Boiler numbers 3 and 4 (OEPA source numbers B003 and B004); a maximum of 1.8 pounds of sulfur dioxide per MM Btu actual heat input from each boiler.

(JJ) The "Ford Motor Company, Walton Hills Stamping Plant" (OEPA premise number 1318581043) or any subsequent owner or operator of the "Ford Motor Company, Walton Hills Stamping Plant, 7845 Northfield Road, Walton Hills, Ohio" shall not cause or permit the emission of sulfur dioxide from boiler numbers 1 through 3 (OEPA source numbers B002 through B004) to exceed a maximum of 1.2 pounds of sulfur dioxide per MM Btu actual heat input from each boiler.

(KK) The "Highland View Cuyahoga County Hospital" (OEPA premise number 1318590195) or any subsequent owner or operator of the "Highland View Cuyahoga County Hospital, 3901 Ireland Drive, Warrensville Township, Ohio" shall not cause or permit the emission of sulfur dioxide from the following sources to exceed the amounts indicated:

(1) Boiler numbers 1 and 2 (OEPA source numbers B001 and B002); a maximum of 1.50 pounds of sulfur dioxide per MM Btu actual heat input from each boiler.

(2) Boiler numbers 3 and 4 (OEPA source numbers B003 and B004); a maximum of 2.90 pounds of sulfur dioxide per MM Btu actual heat input from each boiler.

(LL) The "Cleveland Electric Illuminating Company, Lake Shore Plant" (OEPA premise number 1318000245) or any subsequent owner or operator of the "Cleveland Electric Illuminating Company, Lake Shore Plant, 6800 South Marginal Drive, Cleveland, Ohio" shall not cause or permit the emission of sulfur dioxide from the following sources to exceed the amounts indicated:

(1) Boiler numbers 91 through 94 (OEPA source numbers B001 through B004); a maximum of 1.9 pounds of sulfur dioxide per MM Btu actual heat input from each boiler.

(2) Boiler unit number 18 (OEPA source number B006); a maximum of 1.3 pounds of sulfur dioxide per MM Btu actual heat input.

(MM) [Reserved]

(NN) The "Charter Steel, Inc." (OEPA premise number 1318171623) or any subsequent owner or operator of the "Charter Steel, Inc., Cuyahoga Works, 4300 East 49th Street, Cuyahoga Heights, Ohio" shall not cause or permit the emission of sulfur dioxide from the following sources to exceed the amounts indicated:

(1) Boiler numbers 1 and 2 (OEPA source numbers B001 and B002); a maximum of 0.5 pounds of sulfur dioxide per MM Btu actual heat input from each boiler.

(2) Boiler numbers 3 through 7 (OEPA source numbers B003 through B007); a maximum of 1.30 pounds of sulfur dioxide per MM Btu actual heat input from each boiler.

(OO) The "Lakeland Sludge Handling Facility" (OEPA premise number 1318203249) or any subsequent owner or operator of the "Lakeland Sludge Handling Facility, 2700 Lakeland Boulevard, Euclid, Ohio" shall not cause or permit the emission of sulfur dioxide from incinerator numbers 1 and 2 (OEPA source numbers N001 and N002) to exceed a maximum of 2.5 pounds of sulfur dioxide per ton of material burned from each incinerator.

(PP) The "Lakewood Incinerator" (OEPA premise number 1318282775) or any subsequent owner or operator of the "Lakewood Incinerator, 12920 Berea Road, Lakewood, Ohio" shall not cause or permit the emission of sulfur dioxide from the following sources to exceed the amounts indicated:

(1) Furnace numbers 1 through 4 (OEPA source numbers N001 through N004); a maximum of 2.5 pounds of sulfur dioxide per ton of material burned from each furnace.

(2) Brush burner (OEPA source number N005); a maximum of 2.5 pounds of sulfur dioxide per ton of material burned.

(QQ) The "United States Steel Corporation, Lorain-Cuyahoga Works" (OEPA premise number 1318001622) or any subsequent owner or operator of the "United States Steel Corporation, Lorain-Cuyahoga Works, 2650 Broadway Avenue, Cleveland, Ohio" shall not cause or permit the emission of sulfur dioxide from the following sources to exceed the amounts indicated:

(1) Boiler numbers 1 through 6 (OEPA source numbers B001 through B006); a maximum of 0.0 pounds of sulfur dioxide per MM Btu actual heat input from each boiler.

(2) Blast furnace numbers D-6 and A (OEPA source numbers P001 and P002); a maximum of 0.0 pounds of sulfur dioxide per ton of iron produced.

Effective: 02/17/2011

R.C. 119.032 review dates: 11/30/2010 and 11/30/2015

CERTIFIED ELECTRONICALLY
Certification

02/07/2011
Date

Promulgated Under: 119.03
Statutory Authority: 3704.03(E)
Rule Amplifies: 3704.03(A), 3704.03(E)
Prior Effective Dates: 12/28/79, 10/31/91, 3/17/99, 9/1/03, 3/27/06

3745-18-25 **Darke county emission limits.**

No owner or operator of any coal-fired steam generating unit shall cause or permit the emission of sulfur dioxide from any source to exceed a maximum of 3.6 pounds of sulfur dioxide per MM Btu actual heat input.

Effective: 02/17/2011

R.C. 119.032 review dates: 11/30/2010 and 11/30/2015

CERTIFIED ELECTRONICALLY
Certification

02/07/2011
Date

Promulgated Under: 119.03
Statutory Authority: 3704.03(E)
Rule Amplifies: 3704.03(A), 3704.03(E)
Prior Effective Dates: 12/28/79

3745-18-26 **Defiance county emission limits.**

(A) No owner or operator of any coal-fired steam generating unit, unless otherwise specified in this rule, shall cause or permit the emission of sulfur dioxide from any source to exceed a maximum of 2.6 pounds of sulfur dioxide per MM Btu actual heat input.

(B) The "Dinner Bell Foods" (OEPA premise number 0320010009) or any subsequent owner or operator of the "Dinner Bell Foods" facility located on West High street, Defiance, Ohio shall not cause or permit the emission of sulfur dioxide from boiler numbers 1 through 8 (OEPA source number B001) to exceed a maximum of 1.0 pounds of sulfur dioxide per MM Btu actual heat input from each boiler.

(C) The "Toledo Edison Company" (OEPA premise number 0320010006) or any subsequent owner or operator of the "Toledo Edison Company" facility located on Carpenter road, Defiance, Ohio shall not cause or permit the emission of sulfur dioxide from turbine numbers 1 through 3 (OEPA source numbers B001 through B003) to exceed a maximum of 0.7 pounds of sulfur dioxide per MM Btu actual heat input from each turbine.

Effective: 02/17/2011

R.C. 119.032 review dates: 11/30/2010 and 11/30/2015

CERTIFIED ELECTRONICALLY
Certification

02/07/2011
Date

Promulgated Under: 119.03
Statutory Authority: 3704.03(E)
Rule Amplifies: 3704.03(A), 3704.03(E)
Prior Effective Dates: 12/28/79

3745-18-27 **Delaware county emission limits.**

No owner or operator of any coal-fired steam generating unit shall cause or permit the emission of sulfur dioxide from any source to exceed a maximum of 3.6 pounds of sulfur dioxide per MM Btu actual heat input.

Replaces: 3745-18-27

Effective: 02/17/2011

R.C. 119.032 review dates: 11/30/2015

CERTIFIED ELECTRONICALLY
Certification

02/07/2011
Date

Promulgated Under: 119.03
Statutory Authority: 3704.03(E)
Rule Amplifies: 3704.03(A), 3704.03(E)
Prior Effective Dates: 12/28/79

3745-18-28 **Erie county emission limits.**

(A) No owner or operator of any coal-fired steam generating unit, unless otherwise specified in this rule, shall cause or permit the emission of sulfur dioxide from any source to exceed a maximum of 2.6 pounds of sulfur dioxide per MM Btu actual heat input.

(B) The "Charles J. Otto Greenhouse, Incorporated" (OEPA premise number 0322000173) or any subsequent owner or operator of the Charles J. Otto greenhouse, incorporated facility located at Route Number 1, Berlin Township, Ohio shall not cause or permit the emission of sulfur dioxide from the following sources to exceed the amounts indicated and shall limit the operation of said sources such that the indicated average operating rates are not exceeded for any calendar day:

(1) Coal boiler (OEPA source number B001); a maximum of 5.5 pounds of sulfur dioxide per MM Btu actual heat input and average operating rates as follows: first quarter, ten MM Btu per hour; second quarter, ten MM Btu per hour; third quarter, eight MM Btu per hour; fourth quarter, ten MM Btu per hour.

(2) Oil boiler (OEPA source number B002); a maximum of 2.0 pounds of sulfur dioxide per MM Btu actual heat input and averaging operating rates as follows: first quarter, thirteen MM Btu per hour; second quarter, thirteen MM Btu per hour; third quarter, five MM Btu per hour; fourth quarter, thirteen MM Btu per hour.

(C) The "Jacob H. Otto Greenhouse" (OEPA premise number 0322010174) or any subsequent owner or operator of the Jacob H. Otto greenhouse facility located on route number 1, Huron, Ohio shall not cause or permit the emission of sulfur dioxide from boiler numbers 131083 and 91993 (OEPA source numbers B001 and B002) to exceed a maximum of 5.5 pounds of sulfur dioxide per MM Btu actual heat input from each boiler and shall operate said boilers such that the following combined average operating rates are not exceeded for any calendar day: first quarter, fifteen MM Btu per hour; second quarter, fifteen MM Btu per hour; third quarter, ten MM Btu per hour; fourth quarter, fifteen MM Btu per hour.

(D) The "Visteon Corp." (OEPA premise number 0322020042) or any subsequent owner or operator of the Visteon corp. facility located at 3020 Tiffin avenue, Sandusky, Ohio shall not cause or permit the emission of sulfur dioxide from boiler numbers 1 through 3 (OEPA source numbers B001 through B003) to exceed a maximum of 1.6 pounds of sulfur dioxide per MM Btu actual heat input from each boiler.

(E) The "New Departure-Hyatt" (OEPA premise number 0322020045) or any subsequent owner or operator of the New Departure-Hyatt facility located at 2509 Hayes avenue, Sandusky, Ohio shall not cause or permit the emission of sulfur dioxide from boiler numbers 1 through 3 (OEPA source numbers B001 through B003) to exceed a

maximum of 1.6 pounds of sulfur dioxide per MM Btu actual heat input from each boiler.

(F) The "Huron Lime Company" (OEPA premise number 0322010062) or any subsequent owner or operator of the Huron lime company facility located at 100 Meeker street, Huron, Ohio shall not cause or permit the emission of sulfur dioxide from lime kiln numbers 1, 2, 3 (OEPA source numbers P001 through P003) to exceed a maximum of 4.0 pounds of sulfur dioxide per ton of product.

(G) [Reserved]

(H) The "Ohio Soldiers and Sailors Home" (OEPA premise number 0322020095) or any subsequent owner or operator of the Ohio soldiers and sailors home facility located on Columbus avenue, Sandusky, Ohio shall not cause or permit the emission of sulfur dioxide from boiler numbers 2 and 3 (OEPA source numbers B002 and B003) to exceed a maximum of 1.6 pounds of sulfur dioxide per MM Btu actual heat input from each boiler and shall operate said boilers such that the following combined average operating rates are not exceeded for any calendar day: first quarter thirty-two MM Btu per hour; second quarter, thirty-two MM Btu per hour third quarter, eighteen MM Btu per hour; fourth quarter, eighteen MM Btu per hour.

Effective: 02/17/2011

R.C. 119.032 review dates: 11/30/2010 and 11/30/2015

CERTIFIED ELECTRONICALLY
Certification

02/07/2011
Date

Promulgated Under: 119.03
Statutory Authority: 3704.03(E)
Rule Amplifies: 3704.03(A), 3704.03(E)
Prior Effective Dates: 12/28/79, 1/23/09

3745-18-29 **Fairfield county emission limits.**

(A) No owner or operator of any coal-fired steam generating unit, unless otherwise specified in this rule, shall cause or permit the emission of sulfur dioxide from any source to exceed a maximum of 4.5 pounds of sulfur dioxide per MM Btu actual heat input.

(B) The "Ohio Paperboard Corporation" (OEPA premise number 0123000005) or any subsequent owner or operator of the Ohio paperboard corporation facility located at 210 Water street, Baltimore, Ohio shall not cause or permit the emission of sulfur dioxide from boiler numbers 2 and 3 (OEPA source numbers B001 and B002) to exceed a maximum of 7.0 pounds of sulfur dioxide per MM Btu actual heat input from each boiler.

(C) The "Diamond Power Specialty Corporation" (OEPA premise number 0123010022) or any subsequent owner or operator of the Diamond power specialty corporation facility located at 2600 East Main street, Lancaster, Ohio shall not cause or permit the emission of sulfur dioxide from north boiler and south boiler (OEPA source numbers B001 and B003) to exceed a maximum of 6.9 pounds of sulfur dioxide per MM Btu actual heat input from each boiler.

(D) The "Southeastern Correctional Institution" (OEPA premise number 0123010109) or any subsequent owner or operator of the Southeastern correctional institution facility located in Lancaster, Ohio shall not cause or permit the emission of sulfur dioxide from boiler numbers 1 and 2 (OEPA source numbers B001 and B002) to exceed a maximum of 4.1 pounds of sulfur dioxide per MM Btu actual heat input from each boiler.

(E) The "Sunoco Products Company" (OEPA premise number 0123010150) or any subsequent owner or operator of the Sunoco products company facility located at South Columbus street, Lancaster, Ohio shall not cause or permit the emission of sulfur dioxide from the Brothers boiler (OEPA source number B001) to exceed a maximum of 4.8 pounds of sulfur dioxide per MM Btu actual heat input.

Effective: 02/17/2011

R.C. 119.032 review dates: 11/30/2010 and 11/30/2015

CERTIFIED ELECTRONICALLY
Certification

02/07/2011
Date

Promulgated Under: 119.03
Statutory Authority: 3704.03(E)
Rule Amplifies: 3704.03(A), 3704.03(E)
Prior Effective Dates: 12/28/79, 1/23/06

3745-18-30 **Fayette county emission limits.**

No owner or operator of any coal-fired steam generating unit shall cause or permit the emission of sulfur dioxide from any source to exceed a maximum of 3.6 pounds of sulfur dioxide per MM Btu actual heat input.

Effective: 02/17/2011

R.C. 119.032 review dates: 11/30/2010 and 11/30/2015

CERTIFIED ELECTRONICALLY
Certification

02/07/2011
Date

Promulgated Under: 119.03
Statutory Authority: 3704.03(E)
Rule Amplifies: 3704.04(A), 3704.03(E)
Prior Effective Dates: 12/28/79

3745-18-31 **Franklin county emission limits.**

(A) No owner or operator of the following types of facilities, unless otherwise specified in this rule, shall cause or permit the emission of sulfur dioxide from any stack in excess of the rates specified below:

(1) For fossil fuel-fired steam generating units between 10.0 and 50.0 MM Btu per hour total rated heat input capacity, the emission rate in pounds of sulfur dioxide per MM Btu actual heat input shall be calculated by the following equation:

$EL = 8.088Qm^{-0.4307}$

where:

Qm is the total rated heat input capacity in MM Btu per hour, and

EL is the allowable emission rate in pounds of sulfur dioxide per MM Btu actual heat input.

(2) For fossil fuel-fired steam generating units equal to or greater than 50.0 MM Btu per hour total rated heat input capacity, the emission limitation shall be 1.50 pounds of sulfur dioxide per MM Btu actual heat input.

(3) Except as otherwise provided in this rule, no owner or operator of any process equipment shall cause or permit the emission from any stack into the atmosphere of any process gas stream containing sulfur dioxide in excess of 2.40 pounds of sulfur dioxide per ton of actual process weight input.

(B) The "Rickenbacker Air Force Base" (OEPA premise number 0125000827) or any subsequent owner or operator of the "Rickenbacker Air Force Base," Lockbourne, Ohio shall not cause or permit the emission of sulfur dioxide from any stack at this facility in excess of 2.20 pounds of sulfur dioxide per MM BTU actual heat input.

(C) [Reserved]

(D) The "Clark Grave Vault Company" (OEPA premise number 0125040026) or any subsequent owner or operator of the "Clark Grave Vault Company, 375 East Fifth Avenue, Columbus, Ohio" shall not cause or permit the emission of sulfur dioxide from the following sources to exceed the amount indicated and shall limit the operation of said sources such that the indicated average operating rates are not exceeded for any calendar day:

(1) Boiler number 1 (OEPA source number B001); a maximum of 5.0 pounds of sulfur dioxide per MM Btu actual heat input and average operating rates as follows: first quarter, thirty-four MM Btu per hour; second quarter, 0.0 MM Btu

per hour; third quarter, 0.0 MM Btu per hour; fourth quarter, thirty-four MM Btu per hour.

(2) Boiler number 2 (OEPA source number B002); a maximum of 5.0 pounds of sulfur dioxide per MM Btu actual heat input and average operating rates as follows: first quarter, 0.0 MM Btu per hour; second quarter, three MM Btu per hour; third quarter, three MM Btu per hour; fourth quarter, 0.0 MM Btu per hour.

(E) [Reserved]

(F) [Reserved]

(G) The "Delphi Interior and Lighting Systems" (OEPA permise number 0125040057) or any subsequent owner or operator of the "Delphi Interior and Lighting Systems, 200 Georgesville Road, Columbus, Ohio" shall not cause or permit the emission of sulfur dioxide from boiler numbers 1 through 4 (OEPA source numbers B001 through B004) to exceed a maximum of 1.5 pounds of sulfur dioxide per MM Btu actual heat input from each boiler.

(H) [Reserved]

(I) The "Atlas Linen and Industrial Supply" (OEPA premise number 0125040205) or any subsequent owner or operator of the "Atlas Linen and Industrial Supply, 171 North Grant Avenue, Columbus, Ohio" shall not cause or permit the emission of sulfur dioxide from boiler number 1 (OEPA source number B001) to exceed a maximum of 1.6 pounds of sulfur dioxide per MM Btu actual heat input and shall operate said boiler such that the following average operating rates are not exceeded for any calendar day: first quarter, EIGHT MM Btu per hour; second quarter, seven MM Btu per hour; third quarter, seven MM Btu per hour; fourth quarter, seven MM Btu per hour.

(J) The "Defense Construction Supply Center" (OEPA premise number 0125040219) or any subsequent owner or operator of the "Defense Construction Supply Center, 3990 East Broad Street, Columbus, Ohio" shall not cause or permit the emission of sulfur dioxide from boiler numbers 1 through 3 (OEPA source numbers B001 through B003) to exceed a maximum of 3.45 pounds of sulfur dioxide per MM Btu actual heat input from each boiler and shall operate said boilers such that the following combined average operating rates are not exceeded for any calendar day: first quarter, two hundred five MM Btu per hour; second quarter, one hundred sixty-seven MM Btu per hour; third quarter, one hundred sixty-seven MM Btu per hour; fourth quarter, one hundred sixty-seven MM Btu per hour.

(K) The "Columbus Products Company" (OEPA premise number 0125040319) or any subsequent owner or operator of the "Columbus Products Company, 300 Phillipi Road, Columbus, Ohio" shall not cause or permit the emission of sulfur dioxide from

boiler numbers D0244 through D0246 (OEPA source number B001 through B003) to exceed a maximum of 2.20 pounds of sulfur dioxide per MM Btu actual heat input from each boiler.

(L) The "Ross Laboratories" (OEPA premise number 0125040319) or any subsequent owner or operator of the "Ross Laboratories, 625 Cleveland Avenue, Columbus, Ohio" shall not cause or permit the emission of sulfur dioxide from any stack at this facility in excess of 4.80 pounds of sulfur dioxide per MM Btu actual heat input.

(M) The "Correctional Medical Center" (OEPA premise number 0125040331) or any subsequent owner or operator of the "Correctional Medical Center, 254 West Spring Street, Columbus, Ohio" shall not cause or permit the emission of sulfur dioxide from the following sources to exceed the amount indicated and shall limit the operation of said sources such that the indicated average operating rates are not exceeded for any calendar day:

(1) Boiler number 5 (OEPA source number B001); a maximum of 2.42 pounds of sulfur dioxide per MM Btu actual heat input and average operating rates as follows: first quarter, fifty-four MM Btu per hour; second quarter, twenty-seven MM Btu per hour; third quarter, twenty-seven MM Btu per hour; fourth quarter, fifty-four MM Btu per hour.

(2) Boiler number 7 (OEPA source number B002); a maximum of 2.42 pounds of sulfur dioxide per MM Btu actual heat input and average operating rates as follows: first quarter, ninety-three MM Btu per hour; second quarter, forty-six MM Btu per hour; third quarter, forty-six MM Btu per hour; fourth quarter, ninety-three MM Btu per hour.

(3) Boiler number 8 (OEPA source number B003); a maximum of 2.42 pounds of sulfur dioxide per MM Btu actual heat input and average operating rates as follows: first quarter, thirty-two MM Btu per hour; second quarter, sixteen MM Btu per hour; third quarter, sixteen MM Btu per hour; fourth quarter, thirty-two MM Btu per hour.

(N) The "Central Ohio Psychiatric Hospital" (OEPA premise number 0125040589) or any subsequent owner or operator of the "Central Ohio Psychiatric Hospital," Columbus, Ohio shall not cause or permit the emission of sulfur dioxide from any stack at this facility in excess of 4.10 pounds of sulfur dioxide per million BTU actual heat input.

(O) The "Grant Hospital" (OEPA premise number 125040592) or any subsequent owner or operator of the "Grant Hospital, 309 East State Street, Columbus, Ohio" shall not cause or permit the emission of sulfur dioxide from boiler numbers 1 through 3 (OEPA source numbers B001 through B003) to exceed a maximum of 3.8 pounds of sulfur dioxide per MM Btu actual heat input from each boiler and shall operate said boilers such that the following average operating rates are not exceeded for any

calendar day for each boiler: first quarter, twenty-eight MM Btu per hour; second quarter, twenty-eight MM Btu per hour; third quarter, twenty-one MM Btu per hour; fourth quarter, twenty-eight MM Btu per hour.

(P) [Reserved]

(Q) The "Capital University" (OEPA premise number 0125042612) or any subsequent owner or operator of the "Capital University, 2199 East Main Street, Columbus, Ohio" shall not cause or permit the emission of sulfur dioxide from boiler numbers 1 through 3 (OEPA source numbers B001 through B003) to exceed a maximum of 1.6 pounds of sulfur dioxide per MM Btu actual heat input from each boiler and shall operate said boilers such that the following average operating rates are not exceeded for any calendar day for each boiler: first quarter, forty-two MM Btu per hour; second quarter, thirty-four MM Btu per hour; third quarter, forty-two MM Btu per hour; fourth quarter, thirty-four MM Btu per hour.

(R) [Reserved]

(S) The "Battelle Memorial Institute" (OEPA premise number 0125040520) or any subsequent owner or operator of the "Battelle Memorial Institute, 505 King Avenue, Columbus, Ohio" shall not cause or permit the emission of sulfur dioxide from boiler number 1 (OEPA source number B001) to exceed 4.4 pounds of sulfur dioxide per MM Btu actual heat input and shall operate said boiler such that the following average operating rates are not exceeded for any calendar day: first quarter, twenty-six MM Btu per hour; second quarter, twenty-six MM Btu per hour; third quarter, seventeen MM Btu per hour; fourth quarter, twenty-six MM Btu per hour.

(T) "Anheuser-Busch Incorporated" (OEPA premise number 0125040554) or any subsequent owner or operator of "Anheuser-Busch Incorporated, 700 Schrock Road, Columbus, Ohio" shall not cause or permit the emission of sulfur dioxide from boiler numbers 1 through 4 (OEPA source numbers B001 and B002) to exceed 2.4 pounds of sulfur dioxide per MM Btu actual heat input from each boiler and shall operate said boilers such that their combined average operating rate shall not exceed three hundred two MM Btu per hour for any calendar day.

(U) "ASARCO Incorporated" (OEPA premise number 0125040002) or any subsequent owner or operator of "ASARCO Incorporated, 1353 Windsor Avenue, Columbus, Ohio" shall not cause or permit the emission of sulfur dioxide from the refining kiln, "Wetherill" furnaces, densifying kiln, and roaster acid plant (OEPA source numbers P001 through P004) to exceed the amount prescribed by the following equation:

$$Y = 0.564\ X^{0.85}$$

Where "X" is the total sulfur feed expressed as elemental sulfur in the smelter input stream in pounds per hour, and "Y" is the allowable sulfur dioxide emission rate in pounds per hour from all processes combined.

(V) "Ohio Division, Dayton Malleable Iron" (OEPA premise number 0125040043) or any subsequent owner or operator of "Ohio Division, Dayton Malleable Iron, 1343 Fields Avenue, Columbus, Ohio" shall not cause or permit the emission of sulfur dioxide from the following sources to exceed the amounts indicated:

(1) Cupolas (OEPA source number P001); a maximum of 1.82 pounds of sulfur dioxide per ton of iron produced.

(2) Holding furnaces (OEPA source number P002); a maximum of 1.2 pounds of sulfur dioxide per MM Btu actual heat input.

Effective: 02/17/2011

R.C. 119.032 review dates: 11/30/2010 and 11/30/2015

CERTIFIED ELECTRONICALLY
Certification

02/07/2011
Date

Promulgated Under: 119.03
Statutory Authority: 3704.03(E)
Rule Amplifies: 3704.03(A), 3704.03(E)
Prior Effective Dates: 12/28/79, 5/11/87, 1/23/06

3745-18-32 **Fulton county emission limits.**

No owner or operator of any coal-fired steam generating unit shall cause or permit the emission of sulfur dioxide from any source to exceed a maximum of 2.6 pounds of sulfur dioxide per MM Btu actual heat input.

Effective: 02/17/2011

R.C. 119.032 review dates: 11/30/2010 and 11/30/2015

CERTIFIED ELECTRONICALLY
Certification

02/07/2011
Date

Promulgated Under: 119.03
Statutory Authority: 3704.03(E)
Rule Amplifies: 3704.03(A), 3704.03(E)
Prior Effective Dates: 12/28/79

3745-18-33 **Gallia county emission limits.**

(A) No owner or operator of any coal-fired steam generating unit, unless otherwise specified below, shall cause or permit the emission of sulfur dioxide from any source to exceed a maximum of 4.5 pounds of sulfur dioxide per MM Btu actual heat input.

(B) The "Ohio Valley Electric Corporation, Kyger Creek Station (OEPA premise number 0627000003) or any subsequent owner or operator of the "Ohio Valley Electric Corporation, Kyger Creek Station" facility located in Cheshire, Ohio shall not cause or permit the emission of sulfur dioxide from boiler numbers 1 through 5 (OEPA source numbers B001 through B005) to exceed a maximum of 8.2 pounds of sulfur dioxide per MM Btu actual heat input from each stack.

(C) [Reserved]

(D) The "Ohio Power Company/Ohio Electric Company, General James A. Gavin Plant" (OEPA premise numbers 0627010045) or any subsequent owner or operator of the "Ohio Power Company/Ohio Electric Company, General James A. Gavin Plant" facility located in Cheshire, Ohio shall not cause or permit the emission of sulfur dioxide from unit one main boiler and unit two main boiler (OEPA source numbers B003 and B004) to exceed a maximum of 7.41 pounds of sulfur dioxide per MM Btu actual heat input from each boiler.

Effective: 02/17/2011

R.C. 119.032 review dates: 11/30/2010 and 11/30/2015

CERTIFIED ELECTRONICALLY
Certification

02/07/2011
Date

Promulgated Under: 119.03
Statutory Authority: 3704.03(E)
Rule Amplifies: 3704.03(A), 3704.03(E)
Prior Effective Dates: 12/28/79, 3/21/00

3745-18-34 **Geauga county emission limits.**

(A) No owner or operator of any coal-fired steam generating unit, unless otherwise specified in this rule, shall cause or permit the emission of sulfur dioxide from any source to exceed a maximum of 7.2 pounds of sulfur dioxide per MM Btu actual heat input.

(B) The "Chardon Rubber Company" (OEPA premise number 0228000039) or any subsequent owner or operator of the "Chardon Rubber Company" facility located at 373 Washington Street, Chardon, Ohio shall not cause or permit the emission of sulfur dioxide from boiler numbers 1 and 2 (OEPA source numbers B001 and B002) to exceed a maximum of 5.2 pounds of sulfur dioxide per MM Btu actual heat input from each boiler.

Effective: 02/17/2011

R.C. 119.032 review dates: 11/30/2010 and 11/30/2015

CERTIFIED ELECTRONICALLY
Certification

02/07/2011
Date

Promulgated Under: 119.03
Statutory Authority: 3704.03(E)
Rule Amplifies: 3704.03(A), 3704.03(E)
Prior Effective Dates: 12/28/79, 1/23/06

3745-18-35 **Greene county emission limits.**

(A) No owner or operator of any coal-fired steam generating unit, unless otherwise specified below, shall cause or permit the emission of sulfur dioxide from any source to exceed a maximum of 2.4 pounds of sulfur dioxide per MM Btu actual heat input.

(B) [Reserved]

(C) The "Ohio Veterans Children's Home" (OEPA premise number 0829100113) or any subsequent owner or operator of the "Ohio Veterans Children's Home" facility located in Xenia, Ohio shall not cause or permit the emission of sulfur dioxide from boiler numbers 1 and 2 (OEPA source numbers B001 and B002) to exceed a maximum of 4.6 pounds of sulfur dioxide per MM Btu actual heat input from each boiler and shall operate said boilers such that the following combined average operating rates are not exceeded for any calendar day: first quarter, twenty-six MM Btu per hour; second quarter, thirteen MM Btu per hour; third quarter, thirteen MM Btu per hour; fourth quarter, thirteen MM Btu per hour.

(D) [Reserved]

(E) The "Wright-Patterson Air Force Base" (OEPA premise number 0829700441); or any subsequent owner or operator of the "Wright-Patterson Air Force Base" facility located in building 20770, Bath, Ohio shall not cause or permit the emission of sulfur dioxide from boiler numbers 1 and 2 (OEPA source numbers B001 and B002) to exceed a maximum of 2.04 pounds of sulfur dioxide per MM Btu actual heat input from each boiler.

(F) The "Wright-Patterson Air Force Base" (OEPA premise number 0829700441) or any subsequent owner or operator of the "Wright-Patterson Air Force Base" facility located in building 31240, Bath, Ohio shall not cause or permit the emission of sulfur dioxide from boiler numbers 1 and 2 to exceed a maximum of 2.04 pounds of sulfur dioxide per MM Btu actual heat input from each boiler.

(G) [Reserved]

(H) The "CEMEX - North Annex" (OEPA premise number 0829700088) or any subsequent owner or operator of the "CEMEX - North Annex" facility located on Route 444, Fairborn, Ohio shall not cause or permit the emission of sulfur dioxide from cement kiln numbers 2, 3, and 4 (OEPA source numbers P004 through P006) to exceed a maximum of 13.6 pounds of sulfur dioxide per ton of cement produced.

(I) The "CEMEX" (OEPA premise number 0829810165) or any subsequent owner or operator of the "CEMEX" facility located at 3250 Linebaugh Rd, Xenia, Ohio shall not cause or permit the emission of sulfur dioxide from the quarry plant kiln (OEPA

source number P003) to exceed a maximum of 9.0 pounds of sulfur dioxide per ton of product.

Effective: 02/17/2011

R.C. 119.032 review dates: 11/30/2010 and 11/30/2015

CERTIFIED ELECTRONICALLY
Certification

02/07/2011
Date

Promulgated Under: 119.03
Statutory Authority: 3704.03(E)
Rule Amplifies: 3704.03(A), 3704.03(E)
Prior Effective Dates: 12/28/79, 1/23/06

3745-18-36 **Guernsey county emission limits.**

No owner or operator of any coal-fired steam generating unit shall cause or permit the emission of sulfur dioxide from any source to exceed a maximum of 4.5 pounds of sulfur dioxide per MM Btu actual heat input.

Replaces: 3745-18-36

Effective: 02/17/2011

R.C. 119.032 review dates: 11/30/2015

CERTIFIED ELECTRONICALLY
Certification

02/07/2011
Date

Promulgated Under: 119.03
Statutory Authority: 3704.03(E)
Rule Amplifies: 3704.03(A), 3704.03(E)
Prior Effective Dates: 12/28/79

3745-18-37 **Hamilton county emission limits.**

(A) No owner or operator of any coal-fired steam generating unit, unless otherwise specified below, shall cause or permit the emission of sulfur dioxide from any source to exceed a maximum of 2.0 pounds of sulfur dioxide per MM Btu actual heat input.

(B) The "Lanxess Corporation" (OEPA permits number 1431010054) or any subsequent owner or operator of the "Lanxess Corporation, River Road, Addyston, Ohio" shall not cause or permit the emission of sulfur dioxide from the following sources to exceed the amounts indicated; shall use stacks no lower than the stack heights indicated and shall limit the operation of said sources such that the indicated average operating rates are not exceeded for any calendar day:

(1) Boiler number 4 (OEPA source number B004); a maximum of 0.0 pounds of sulfur dioxide per MM Btu actual heat input.

(2) Boiler numbers 5, 6 and 7 (OEPA source numbers B002, B003 and B006); a maximum of 5.5 pounds of sulfur dioxide per MM Btu actual heat input from each boiler and a minimum stack height of sixty-five feet above ground level for each boiler.

(3) Boiler number 8 (OEPA source number B007); a maximum of 1.14 pounds of sulfur dioxide per MM Btu actual heat input.

(4) Boiler number 4 through 8 (OEPA source numbers B004, B002, B003, B006 and B007); a combined average operating rate two hundred seventy-five MM Btu per hour for any calendar day from boilers burning coal or fuel oil during any calendar day.

(C) [Reserved]

(D) The "Cognis Corporation" (OEPA premise number 1431070035) or any subsequent owner or operator of the "Cognis Corporation, 4900 Este Avenue, Cincinnati, Ohio" shall not cause or permit the emission of sulfur dioxide from the following sources to exceed the amounts indicated; shall use stacks no lower than the stack height indicated and shall limit the operation of said sources such that the indicated average operating rates are not exceeded for any calendar day:

(1) Boiler numbers 4 and 5 (OEPA source numbers B014 and B015); a maximum of 0.8 pounds of sulfur dioxide per MM Btu actual heat input from each boiler and a minimum stack height of two hundred thirteen feet above ground level for each boiler.

(2) Boiler number 1 (OEPA source number B027); a maximum of 1.2 pounds of sulfur dioxide per MM Btu actual heat input.

(3) Boiler number 2 (OEPA source number B028); a maximum of 1.2 pounds of sulfur dioxide per MM Btu actual heat input.

(4) Boiler number 1, 4, 5 (OEPA source numbers B027, B014 and B015); a combined average operating rate of six hundred ninety-five MM Btu per hour.

(5) As an alternative to the requirements specified in paragraph (D)(1) of this rule, after December 22, 1993, and prior to the installation of a stack with minimum stack height of two hundred thirteen feet above ground level serving boiler numbers 4 and 5; for boiler numbers 4 and 5 (OEPA source numbers B014 and B015); a maximum of 0.0 pounds of sulfur dioxide per MM Btu actual heat input from each boiler.

(E) The "Noveon Hilton-Davis Company" (OEPA premise number 1431070039) or any subsequent owner or operator if the "Noveon Hilton-Davis Company, 2235 Langdon Farm Road, Cincinnati, Ohio" shall not cause or permit the emission of sulfur dioxide from the following sources to exceed the amounts indicated:

(1) Unit numbers 1, 2, 3, and 5 (OEPA source numbers B004, B005, B006 and B012); a maximum of 0.0 pounds of sulfur dioxide per MM Btu actual heat input from each boiler.

(2) Unit number 6 (OEPA source numbers B009); a maximum of 1.88 pounds of sulfur dioxide per MM Btu actual heat input.

(3) Unit number 7 (OEPA source number B010); a maximum of 1.2 pounds of sulfur dioxide per MM Btu actual heat input.

(4) Oleum storage unloading (OEPA source number P003); a maximum of 0.0 pounds of sulfur dioxide per ton of product unloaded.

(5) Sulfonators (OEPA source number P039); a maximum of 0.0 pounds of sulfur dioxide per ton of product.

(F) [Reserved]

(G) The "Christ Hospital" (OEPA premise number 1431070132) or any subsequent owner or operator of the "Christ Hospital, 2139 Auburn Avenue, Cincinnati, Ohio" shall not cause or permit the emission of sulfur dioxide from boiler numbers 1 through 3 (OEPA source numbers B001 through B003) to exceed a maximum of 0.0 pounds of sulfur dioxide per MM Btu actual heat input from each boiler.

(H) The "University Hospital" (OEPA premise number 1431070207) or any subsequent owner or operator of the "University Hospital, 234 Goodman Street, Cincinnati,

Ohio" shall not cause or permit the emission of sulfur dioxide from the following sources to exceed the amounts indicated:

(1) Boiler numbers 4 and 3 (OEPA source numbers B003 and B008); a maximum of 1.45 pounds of sulfur dioxide per MM Btu actual heat input from each boiler.

(2) Boiler numbers 2 (OEPA source number B004 and B005); a maximum of 0.24 pounds of sulfur dioxide per MM Btu actual heat input from each boiler.

(I) [Reserved]

(J) The "Andrew Jergens Company" (OEPA premise number 1431070624) or any subsequent owner or operator of the "Andrew Jergens Company, 2535 Spring Grove Avenue, Cincinnati, Ohio" shall not cause or permit the emission of sulfur dioxide from boiler number 1 (OEPA source number B003) to exceed a maximum of 2.0 pounds of sulfur dioxide per MM Btu actual heat input.

(K) The "University of Cincinnati" (OEPA premise number 1431070849) or any subsequent owner or operator of the "University of Cincinnati, Clifton Campus, Cincinnati, Ohio" shall not cause or permit the emission of sulfur dioxide from the following sources to exceed the amounts indicated:

(1) Boiler numbers 1 3, and 4 (OEPA source numbers B001, B003 and B004); a maximum of 0.0 pounds of sulfur dioxide per MM Btu actual heat input from each boiler.

(2) Boiler number 2 (OEPA source numbers B005); a maximum of 0.3 pounds of sulfur dioxide per MM Btu actual heat input.

(3) Boiler numbers 6 and 7 (OEPA source numbers B019 and B020); a maximum of 0.3 pounds of sulfur dioxide per MM Btu actual heat input from each boiler.

(L) [Reserved]

(M) [Reserved]

(N) The "Rock-Tenn Products" (OEPA premise number 1431070952) or any subsequent owner or operator of the "Rock-Tenn Products, 3347 Madison Road, Cincinnati, Ohio" shall not cause or permit the emission of sulfur dioxide from boiler number 1 (OEPA source number B001) to exceed a maximum of 2.0 pounds of sulfur dioxide per MM Btu actual heat input.

(O) [Reserved]

(P) The "Caraustar Mill Group, Inc." (OEPA premise number 1431071006) or any subsequent owner or operator of the "Caraustar Mill Group, Inc., 5500 Wooster

Road, Cincinnati, Ohio" shall not cause or permit the emission of sulfur dioxide from boiler numbers 3 and 4 (OEPA source numbers B003 and B004) to exceed a maximum of 2.0 pounds of sulfur dioxide per MM Btu actual heat input from each boiler.

(Q) The "Queen City Terminals, Incorporated" (OEPA premise number 1431072036) or any subsequent owner or operator of the "Queen City Terminals, Incorporated, 3801 Kellogg Avenue, Cincinnati, Ohio" shall not cause or permit the emission of sulfur dioxide from boiler number 3 (OEPA source number B003) to exceed a maximum of 0.0 pounds of sulfur dioxide per MM Btu actual heat input.

(R) The "Chevron, USA Incorporated" (OEPA premise number 1431080082) or any subsequent owner or operator of the "Chevron, USA Incorporated, State Route 128, Hooven Ohio" shall not cause or permit the emission of sulfur dioxide from the following sources to exceed the amounts indicated:

(1)

CRU hydrocarbon heater HH-1 (OEPA source number B002),

CRU charge heater PH-1 (OEPA source number B003),

CRU int. heater PH-2 (OEPA source number B004),

CRU reboiler heater PM-3 (OEPA source number B005),

1F-1 crude unit A heater (OEPA source number B006),

Crude unit V heater 1F-1 (OEPA source number B007),

Alkylation unit heater 3F-1 (OEPA source number B008),

FCCU preheater B-2 (OEPA source number B010),

LB Boiler E1 (OEPA source number B011),

HP boiler number 21 (OEPA source number B012),

HP boiler number 22 (OEPA source number B013),

LP boiler number 2 (OEPA source number B014),

LP boiler number 3 (OEPA source number B015),

LP boiler number 4 (OEPA source number B016), and

Reactor charge heater number 2 PH-4 (OEPA source number B017);

A maximum of 0.0 pounds of sulfur dioxide per MM Btu actual heat input from each unit.

(2) FCC (OEPA source number P001) and CO boiler number 23 (OEPA source number B001); a maximum of 0.0 pounds of sulfur dioxide per one thousand pounds of fresh feed.

(S) [Reserved]

(T) The "Sisters of Charity, Mount St. Joseph" (OEPA premise number 1431131566) or any subsequent owner or operator of the "Sisters of Charity, Mount St. Joseph, Delhi, Ohio" shall not cause or permit the emission of sulfur dioxide from boiler numbers 1 through 3 (OEPA source numbers B001 through B003) to exceed a maximum of 2.0 pounds of sulfur dioxide per MM Btu actual heat input from each boiler.

(U) [Reserved]

(V) The "Ford Motor Company" (OEPA premise number 1431140861) or any subsequent owner or operator of the "Ford Motor Company, 3000 Sharon Road, Sharonville, Ohio" shall not cause or permit the emission of sulfur dioxide from the following sources to exceed the amounts indicated and shall limit the operation of said sources such that the indicated average operating rates are not exceeded for any calendar day:

(1) Boiler numbers 1 through 3 (OEPA source numbers B001 through B003); a maximum of 1.7 pounds of sulfur dioxide per MM Btu actual heat input from each boiler and a combined average operating rate of two hundred forty-four MM Btu per hour.

(2) As alternative to the requirements specified in paragraph (V)(1) of this rule, boiler numbers 1 through 3 (OEPA source numbers B001 through B003); maximum of 1.15 pounds of sulfur dioxide per MM Btu actual heat input from each boiler and a combined average operating rate of three hundred forty-two MM Btu per hour.

(W) The "General Electric Company" (OEPA premise number 1431150060) or any subsequent owner or operator of the "General Electric Company, Interstate 75, Evendale, Ohio" shall not cause or permit the emission of sulfur dioxide from boiler numbers 5, 6, and 8 (OEPA source numbers B007, B008 and B009); a maximum of 1.52 pounds of sulfur dioxide per MM Btu actual heat input from each boiler and shall limit the operation of boiler numbers 6 and 8 (OEPA source numbers B008 and B009) such that their combined average operating rate shall not exceed two hundred forty-four MM Btu per hour for any calendar day.

(X) The "Formica Corporation" (OEPA premise number 1431150801) or any subsequent owner or operator of the "Formica Corporation, 10155 Reading Road, Evendale, Ohio" shall not cause or permit the emission of sulfur dioxide from boiler numbers 3 through 5 (OEPA source numbers B001 through B003) to exceed a maximum of 2.0 pounds of sulfur dioxide per MM Btu actual heat input from each boiler.

(Y) [Reserved]

(Z) [Reserved]

(AA) [Reserved]

(BB) The "Cincinnati Gas and Electric Company, Miami Fort Station" (OEPA premise number 1431350093) or any subsequent owner or operator of the "Cincinnati Gas and Electric Company, Miami Fort Station, Brower Road, Miami Ohio" shall not cause or permit the emission of sulfur dioxide from the following sources to exceed the amounts indicated and shall use stacks no lower than the stack height indicated:

(1) [Reserved]

(2) [Reserved]

(3) Unit number 6 (OEPA source number B007); a maximum of 5.0 pounds of sulfur dioxide per MM Btu actual heat input from each boiler and a minimum stack height of five hundred ninety feet above ground level.

(4) Gas turbine numbers GT-3 through GT-6 (OEPA source numbers B010 through B013); a maximum of 0.5 pounds of sulfur dioxide per MM Btu actual heat input.

(5) Unit number 7 (OEPA source number B015); a maximum of 5.5 pounds of sulfur dioxide per MM Btu actual heat input.

(6) Unit number 8 (OEPA source number B016); a maximum of 1.2 pounds of sulfur dioxide per MM Btu actual heat input.

(CC) The "Chevron Asphalt Company" (OEPA premise number 1431350149) or any subsequent owner or operator of the "Chevron Asphalt Company, 11001 Brower Road, Miami Township, Ohio" shall not cause or permit the emission of sulfur dioxide from the following sources to exceed the amounts indicated:

(1) Unit numbers F101A, F102, F103 and F103A (OEPA source numbers B001, B002, B003 and B006); a maximum of 0.0 pounds of sulfur dioxide per MM BTU actual heat input from each boiler.

(2) Unit numbers F2 and F301 (OEPA source numbers B004 and B005); a maximum of 2.0 pounds of sulfur dioxide per MM Btu actual heat input from each boiler.

(DD) The "United States Playing Card Company" (OEPA premise number 1431370249) or any subsequent owner or operator of the "United States Playing Card Company, Park and Beech Streets, Norwood, Ohio" shall not cause or permit the emission of sulfur dioxide from boiler numbers 1 and 2 (OEPA source numbers B001 and B002) to exceed a maximum of 2.0 pounds of sulfur dioxide per MM Btu actual heat input from each boiler.

(EE) [Reserved]

(FF) The "PMC Specialties Group, Division PMC Incorporated" (OEPA premise number 1431390137) or any subsequent owner or operator of the "PMC Specialties Group, Division of PMC Incorporated, 501 Murray Road, St. Bernard, Ohio" shall not cause or permit the emission of sulfur dioxide from the following sources to exceed the amounts indicated:

(1) Boiler number 1 (OEPA source number B001); a maximum of 2.0 pounds of sulfur dioxide per MM Btu actual heat input.

(2) Boiler number 2 (OEPA source number B003); a maximum of 1.6 pounds of sulfur dioxide per MM Btu actual heat input.

(GG) "DEGS of St. Bernard LLC" (OEPA Premise Number 1431394148), the operator and permit holder of the following source or any subsequent owner or operator of the " DEGS of St. Bernard LLC, 5201 Spring Grove Avenue, Cincinnati, Ohio" shall not cause or permit the emission of sulfur dioxide from the following sources to exceed the amounts indicated, shall use stacks no lower than the height indicated and shall limit the sources such that the indicated average operating rates are not exceeded for any calendar day:

(1) [Reserved]

(2) [Reserved]

(3) [Reserved]

(4) Boiler number 4 (OEPA source numbers B022); a maximum of 2.0 pounds of sulfur dioxide per MM Btu actual heat input, the average operating rate of 450 MM Btu per hour for any calendar day and shall use a stack no lower than two hundred thirteen feet above ground level.

(HH) The "Ralston Purina Company" (OEPA premise number 1431400175) or any subsequent owner or operator of the "Ralston Purina Company, 11301 Mosteller Road, Cincinnati, Ohio" shall not cause or permit the emission sulfur dioxide from

boiler number 1 (OEPA source number B001) to exceed a maximum of 2.0 pounds of sulfur dioxide per MM Btu actual heat input.

(II) [Reserved]

(JJ) [Reserved]

(KK) The "E.I. duPont deNemours and Company, Fort Hill Plant" (OEPA premise number 1431350817) or any subsequent owner or operator of the "E.I. duPont deNemours and Company, Fort Hill Plant, Brower Road, Miami, Ohio" shall not cause or permit the emission of sulfur dioxide from the sulfuric acid plant (OEPA source number P001) to exceed a maximum of 25.0 pounds of sulfur dioxide per ton of one hundred per cent acid produced and shall use a stack no lower than three hundred feet above ground level.

(LL) The "James B. Beam Distilling Company" (OEPA premise number 1431070065) or any subsequent owner or operator of the "James B. Beam Distilling Company, 120 Section Road, Cincinnati, Ohio" shall not cause or permit the emission of sulfur dioxide from boiler numbers 1 through 4 (OEPA source numbers B001 through B004) to exceed a maximum of 0.0 pounds of sulfur dioxide per MM Btu actual heat input from each boiler.

Effective: 02/17/2011

R.C. 119.032 review dates: 11/30/2010 and 11/30/2015

CERTIFIED ELECTRONICALLY
Certification

02/07/2011
Date

Promulgated Under: 119.03
Statutory Authority: 3704.03(E)
Rule Amplifies: 3704.03(A), 3704.03(E)
Prior Effective Dates: 12/28/79, 6/15/89, 10/31/91, 3/10/93, 12/31/96, 1/23/06

3745-18-38 **Hancock county emission limits.**

(A) No owner or operator of any coal-fired steam generating unit, unless otherwise specified below, shall cause or permit the emission of sulfur dioxide from any source to exceed a maximum of 2.6 pounds of sulfur dioxide per MM Btu actual heat input.

(B) The "Ashland Oil Company" (OEPA premise number 0332010020) or any subsequent owner or operator of the Ashland oil company facility located on Glessner avenue, Findlay, Ohio shall not cause or permit the emission of sulfur Dioxide from the following sources to exceed the amounts indicated:

(1) Crude heater numbers 7-1-B-1, vacuum heater number 7-5-B-1 (OEPA source numbers B001 and B002); a maximum of 5.3 pounds of sulfur dioxide per MM Btu actual heat input from each boiler.

(2) Boiler numbers 8 and 9 (OEPA source numbers B003 and B004); a maximum of 5.3 pounds of sulfur dioxide per MM Btu actual heat input from each boiler.

(C) The "Northern Ohio Sugar Company (OEPA premise number 0332010013) or any subsequent owner or operator of the Northern Ohio sugar company facility located in Findlay, Ohio shall not cause or permit the emission of sulfur dioxide from boiler numbers 2 and 3 (OEPA source numbers B002 and B003) to exceed a maximum of 2.5 pounds of sulfur dioxide per MM Btu actual heat input from each boiler.

(D) The "Cooper Tire and Rubber Company" (OEPA premise number 0332010003) or any subsequent owner or operator of the Cooper tire and rubber company facility located at Lima and Western avenues, Findlay, Ohio shall not cause or permit the emission of sulfur dioxide from boiler number 1 (OEPA source number B004) to exceed a maximum of 5.3 pounds of sulfur dioxide per MM Btu actual heat input.

(E) The "Archer Daniels Midland Company" (OEPA premise number 0332020187) or any subsequent owner or operator of the Archer Daniels Midland company facility located on state route 12, Fostoria, Ohio shall not cause or permit the emission of sulfur dioxide from boiler number 1 (OEPA source number B001) to exceed a maximum of 1.2 pounds of sulfur dioxide per MM Btu actual heat input.

Effective: 02/17/2011

R.C. 119.032 review dates: 11/30/2010 and 11/30/2015

CERTIFIED ELECTRONICALLY
Certification

02/07/2011
Date

Promulgated Under: 119.03
Statutory Authority: 3704.03(E)
Rule Amplifies: 3704.03(A), 3704.03(E)
Prior Effective Dates: 12/28/79, 1/23/06

3745-18-39 **Hardin county emission limits.**

No owner or operator of any coal-fired steam generating unit shall cause or permit the emission of sulfur dioxide from any source to exceed a maximum of 2.6 pounds of sulfur dioxide per MM Btu actual heat input.

Effective: 02/17/2011

R.C. 119.032 review dates: 11/30/2010 and 11/30/2015

CERTIFIED ELECTRONICALLY
Certification

02/07/2011
Date

Promulgated Under: 119.03
Statutory Authority: 3704.03(E)
Rule Amplifies: 3704.03(A), 3704.03(E)
Prior Effective Dates: 12/28/79

3745-18-40 **Harrison county emission limits.**

No owner or operator of any coal-fired steam generating unit shall cause or permit the emission of sulfur dioxide from any source to exceed a maximum of 4.5 pounds of sulfur dioxide per MM Btu actual heat input.

Replaces: 3745-18-40

Effective: 02/17/2011

R.C. 119.032 review dates: 11/30/2015

CERTIFIED ELECTRONICALLY
Certification

02/07/2011
Date

Promulgated Under: 119.03
Statutory Authority: 3704.03(E)
Rule Amplifies: 3704.03(A), 3704.03(E)
Prior Effective Dates: 12/28/79

3745-18-41 **Henry county emission limits.**

(A) No owner or operator of any coal-fired steam generating unit, unless otherwise specified in this rule, shall cause or permit the emission of sulfur dioxide from any source to exceed a maximum of 2.6 pounds of sulfur dioxide per MM Btu actual heat input.

(B) The "Campbell Soup Company" (OEPA premise number 0335010105) or any subsequent owner or operator of the "Campbell Soup Company" facility located in Napoleon, Ohio shall not cause or permit the emission of sulfur dioxide from the following sources to exceed the amounts indicated:

(1) Boiler numbers 1 and 2 (OEPA source numbers B001 and B002); a maximum of 6.2 pounds of sulfur dioxide per MM Btu actual heat input from each boiler.

(2) Boiler number 3 (OEPA source number B003); a maximum of 2.1 pounds of sulfur dioxide per MM Btu actual heat input.

(C) The "Municipal Electric Plant" (OEPA premise number 0335010014) or any subsequent owner or operator of the "Municipal Electric Plant" facility located in Napoleon, Ohio shall not cause or permit the emission of sulfur dioxide from unit number 5 (OEPA source number B001) to exceed a maximum of 5.88 pounds of sulfur dioxide per MM Btu actual heat input.

Effective: 02/17/2011

R.C. 119.032 review dates: 11/30/2010 and 11/30/2015

CERTIFIED ELECTRONICALLY
Certification

02/07/2011
Date

Promulgated Under: 119.03
Statutory Authority: 3704.03(E)
Rule Amplifies: 3704.03(A), 3704.03(E)
Prior Effective Dates: 12/28/79

3745-18-42 **Highland county emission limit.**

No owner or operator of any coal-fired steam generating unit shall cause or permit the emission of sulfur dioxide from any source to exceed a maximum of 3.6 pounds of sulfur dioxide per MM Btu actual heat input.

Effective: 02/17/2011

R.C. 119.032 review dates: 11/30/2010 and 11/30/2015

CERTIFIED ELECTRONICALLY
Certification

02/07/2011
Date

Promulgated Under: 119.03
Statutory Authority: 3704.03(E)
Rule Amplifies: 3704.03(A), 3704.03(E)
Prior Effective Dates: 12/28/79

3745-18-43 **Hocking county emission limits.**

No owner or operator of any coal-fired steam generating unit shall cause or permit the emission of sulfur dioxide from any source to exceed a maximum of 4.5 pounds of sulfur dioxide per MM Btu actual heat input.

Effective: 02/17/2011

R.C. 119.032 review dates: 11/30/2010 and 11/30/2015

CERTIFIED ELECTRONICALLY
Certification

02/07/2011
Date

Promulgated Under: 119.03
Statutory Authority: 3704.03(E)
Rule Amplifies: 3704.03(A), 3704.03(E)
Prior Effective Dates: 12/28/79

3745-18-44 **Holmes county emission limits.**

(A) No owner or operator of any coal-fired steam generating unit, unless otherwise specified in this rule, shall cause or permit the emission of sulfur dioxide from any source to exceed a maximum of 4.5 pounds of sulfur dioxide per MM Btu actual heat input.

(B) The "Holmes By-Product, Incorporated" (OEPA premise number 0638000004) or any subsequent owner or operator of the "Holmes By-Product, Incorporated" facility located on route 5, Millersburg, Ohio shall not cause or permit the emission of sulfur dioxide from boiler number 1 (OEPA source number B001) to exceed a maximum of 4.0 pounds of sulfur dioxide per MM Btu actual heat input.

Effective: 02/17/2011

R.C. 119.032 review dates: 11/30/2010 and 11/30/2015

CERTIFIED ELECTRONICALLY
Certification

02/07/2011
Date

Promulgated Under: 119.03
Statutory Authority: 3704.03(E)
Rule Amplifies: 3704.03(A), 3704.03(E)
Prior Effective Dates: 12/28/79

3745-18-45 **Huron county emission limits.**

(A) No owner or operator of any coal-fired steam generating unit, unless otherwise specified in this rule, shall cause or permit the emission of sulfur dioxide from any source to exceed a maximum of 8.0 pounds of sulfur dioxide per MM Btu actual heat input.

(B) The "Ohio Edison Company, Norwalk Plant" (OEPA premise number 0339020181) or any subsequent owner or operator of the "Ohio Edison Company, Norwalk Plant" facility located at 204 Woodlawn avenue, Norwalk Ohio shall not cause or permit the emission of sulfur dioxide from boiler numbers 1 through 5 (OEPA source numbers B001 through B005) to exceed a maximum of 6.9 pounds of sulfur dioxide per MM Btu actual heat input from each boiler.

(C) The "Central Soya Company, Incorporated" (OEPA premise number 0372010015) or any subsequent owner or operator of the "Central Soya Company, Incorporated" facility located on Goodrich road, Bellevue, Ohio shall not cause or permit the emission of sulfur dioxide from boiler numbers 1 through 3 (OEPA source numbers B001 through B003) to exceed a maximum of 5.9 pounds of sulfur dioxide per MM Btu actual heat input from each boiler.

Effective: 02/17/2011

R.C. 119.032 review dates: 11/30/2010 and 11/30/2015

CERTIFIED ELECTRONICALLY
Certification

02/07/2011
Date

Promulgated Under: 119.03
Statutory Authority: 3704.03(E)
Rule Amplifies: 3704.03(A), 3704.03(E)
Prior Effective Dates: 12/28/79

3745-18-46 **Jackson county emission limits.**

No owner or operator of any coal-fired steam generating unit shall cause or permit the emission of sulfur dioxide from any source to exceed a maximum of 4.5 pounds of sulfur dioxide per MM Btu actual heat input.

Effective: 02/17/2011

R.C. 119.032 review dates: 11/30/2010 and 11/30/2015

CERTIFIED ELECTRONICALLY
Certification

02/07/2011
Date

Promulgated Under: 119.03
Statutory Authority: 3704.03(E)
Rule Amplifies: 3704.03(A), 3704.03(E)
Prior Effective Dates: 12/28/79

3745-18-47 **Jefferson county emission limits.**

(A) No owner or operator of any coal-fired steam generating unit, unless otherwise specified in this rule, shall cause or permit the emission of sulfur dioxide from any source to exceed a maximum of 1.8 pounds of sulfur dioxide per MM Btu actual heat input.

(B) No owner or operator of any oil-fired steam generating unit unless otherwise specified in this rule, shall cause or permit the emission of sulfur dioxide from any source to exceed a maximum of 0.8 pounds of sulfur dioxide per MM Btu actual heat input.

(C) No owner or operator of a by-product coke oven for a facility which utilizes by-product coke oven gas shall cause or permit the combustion of by-product coke oven gas containing hydrogen sulfide in excess of fifty grains of hydrogen sulfide per one hundred dry standard cubic feet of coke oven gas.

(D) The "Cardinal Operating Company" (OEPA premise number 0641050002) or any subsequent owner or operator of the "Cardinal Operating Company," Brilliant, Ohio shall not cause or permit the emissions of sulfur dioxide from unit numbers 1 and 2 (OEPA source numbers B001 and B002) to exceed a maximum of 7.08 pounds of sulfur dioxide per MM Btu actual heat input from each boiler.

(E) [Reserved]

(F) [Reserved]

(G) The "Wheeling-Pittsburgh Steel, Steubenville South Plant" (OEPA premise number 0641090010) or any subsequent owner or operator of the "Wheeling-Pittsburgh Steel, Steubenville South Plant," Mingo Junction, Ohio shall not cause or permit the emission of sulfur dioxide from the following sources to exceed the amounts indicated:

(1) Boiler numbers 1 through 12 (OEPA source numbers B001 through B012); a maximum of 2.1 pounds of sulfur dioxide per MM Btu actual heat input from each boiler and a total of one thousand four hundred fifteen tons of sulfur dioxide per any period of three hundred sixty consecutive days.

(2) Forty-four-inch soaking pits - block numbers 1 through 5 (OEPA source numbers B013 through B017); from the combustion of coke oven gas containing hydrogen sulfide, fifty grains of hydrogen sulfide per one hundred dry standard cubic feet of coke oven gas.

(H) The "Wheeling-Pittsburgh Steel, Yorkville Plant" (OEPA premise number 0641120012) or any subsequent owner or operator of the "Wheeling-Pittsburgh

Steel, Yorkville Plant," Yorkville, Ohio shall not cause or permit the emission of sulfur dioxide from boiler numbers 2 through 10 (OEPA source numbers B001 through B009) to exceed a maximum of 5.62 pounds of sulfur dioxide per MM Btu actual heat input from each boiler.

(I) [Reserved]

(J) [Reserved]

(K) The "Toronto Paperboard Company" (OEPA premise number 064118000) or any subsequent owner or operator of the "Toronto Paperboard Company, 421 Loretta Avenue, Toronto, Ohio" shall not cause or permit the emission of sulfur dioxide from boiler number 1 (OEPA source number B001) to exceed a maximum of 6.0 pounds of sulfur dioxide per MM Btu actual heat input.

(L) The "Ohio Edison Company, W.H. Sammis Plant" (OEPA premise number 0641160017) or any subsequent owner or operator of the "Ohio Edison Company, W.H. Sammis Plant, Route Number 7, Stratton, Ohio" shall not cause or permit the emission of sulfur dioxide from the following sources to exceed the amounts indicated:

(1) Auxiliary heating boiler (OEPA source number B001); a maximum of 0.0 pounds of sulfur dioxide per MM Btu actual heat input.

(2) Diesel numbers A, B2, B3, and B4 (OEPA source numbers B002, B003, B004, B005, and B006); a maximum of 0.8 pounds of sulfur dioxide per MM Btu actual heat input from each diesel.

(3) Boiler numbers 1 through 4 (OEPA source numbers B007 through B010); a maximum of 1.61 pounds of sulfur dioxide per MM Btu actual heat input from each boiler.

(4) Boiler numbers 5 through 7 (OEPA source numbers B011 through B013); a maximum of 4.46 pounds of sulfur dioxide per MM Btu actual heat input from each boiler.

(5) As an alternative to the requirements specified in paragraphs (L)(3) and (L)(4) of this rule, boiler numbers 1 through 7 (OEPA source numbers B007 through B013); a maximum of 2.91 pounds of sulfur dioxide per MM Btu actual heat input from each boiler. The "Ohio Edison Company, W.H. Sammis Plant" shall notify the director and the administrator at least ninety days prior to the intended date of conversion when changing between the emission limits contained in this paragraph and the emission limits contained in paragraphs (L)(3) and (L)(4) of this rule. "The Ohio Edison Company, W.H. Sammis Plant" shall comply with either the requirements of this paragraph or paragraphs (L)(3) and (L)(4) of this rule.

(M) [Reserved]

(N) [Reserved]

(O) "Buckeye Power, Incorporated" (OEPA premise number 1741050129) or any subsequent owner or operator of "Buckeye Power, Incorporated," Brilliant, Ohio shall not cause or permit the emission of sulfur dioxide from Cardinal unit number 3 (OEPA source number B002) to exceed a maximum of 2.0 pounds of sulfur dioxide per MM Btu actual heat input.

Effective: 02/17/2011

R.C. 119.032 review dates: 11/30/2010 and 11/30/2015

CERTIFIED ELECTRONICALLY
Certification

02/07/2011
Date

Promulgated Under: 119.03
Statutory Authority: 3704.03(E)
Rule Amplifies: 3704.03(A), 3704.03(E)
Prior Effective Dates: 5/11/87, 12/28/79, 7/25/96

3745-18-48 **Knox county emission limits.**

No owner or operator of any coal-fired steam generating unit, unless otherwise specified in this rule, shall cause or permit the emission of sulfur dioxide from any source to exceed the maximum of 4.5 pounds of sulfur dioxide per MM Btu actual heat input.

Replaces: 3745-18-48

Effective: 02/17/2011

R.C. 119.032 review dates: 11/30/2015

CERTIFIED ELECTRONICALLY
Certification

02/07/2011
Date

Promulgated Under: 119.03
Statutory Authority: 3704.03(E)
Rule Amplifies: 3704.03(A), 3704.03(E)
Prior Effective Dates: 12/28/79

3745-18-49 **Lake county emission limits.**

(A) No owner or operator of any coal-fired steam generating unit, unless otherwise specified in this rule, shall cause or permit the emission of sulfur dioxide from any source to exceed a maximum of 7.2 pounds of sulfur dioxide per MM Btu actual heat input.

(B) The "Lubrizol Corporation" (OEPA premise number 0243000024) or any subsequent owner or operator of the "Lubrizol Corporation, 155 Freedom Road, Painesville, Ohio" shall not cause or permit the emission of sulfur dioxide from the following sources to exceed the amounts indicated:

(1) Boiler numbers 1 through 4 (OEPA source numbers B001 through B004); a maximum of 1.6 pounds of sulfur dioxide per MM Btu actual heat input from each boiler.

(2) Process "C" (OEPA source number P001); a maximum of 19.05 pounds of sulfur dioxide per hour.

(3) Process "G" (OEPA source number P006); a maximum of 26.99 pounds of sulfur dioxide per hour.

(4) Process "L" (OEPA source number P011); a maximum of 2.4 pounds of sulfur dioxide per hour.

(5) Process "M" (OEPA source number P012); a maximum of 160.0 pounds of sulfur dioxide per hour.

(6) Process "N" (OEPA source number P013); a maximum of 25.0 pounds of sulfur dioxide per hour.

(7) Process "O" (OEPA source number P014); a maximum of 10.0 pounds of sulfur dioxide per hour.

(8) Process "W" (OEPA source number P022); a maximum of 20.0 pounds of sulfur dioxide per hour.

(9) Process "B" (OEPA source number P026); a maximum of 29.62 pounds of sulfur dioxide per hour.

(10) Process "Z" (OEPA source number P029); a maximum of 68.80 pounds of sulfur dioxide per hour.

(11) Process "AC" (OEPA source number P030); a maximum of 30.0 pounds of sulfur dioxide per hour.

(12) Waste incinerator (OEPA source number N001); a maximum of 100.0 pounds of sulfur dioxide per hour.

(13) In addition to the provisions of paragraphs (B)(4), (B)(5), (B)(6), (B)(7), (B)(8) and (B)(11) of this rule, processes "L", "M", "N", "O", "W" and "AC" (OEPA source numbers P011 through P014, P022 and P030) shall be limited to the emission of sulfur dioxide not to exceed a maximum of 247.4 pounds of sulfur dioxide per hour or a maximum of 100.0 tons of sulfur dioxide per calendar year.

(14) The combined allowable emissions from processes "L", "M", "N", "O", "W" and "AC" (OEPA source numbers P011 through P014, P022 and P030) for any hour shall be the sum of the individual allowable sulfur dioxide emission limits for those processes that are in operation during any part of that hour.

(C) [Reserved]

(D) The "PET Processors, LLC" (OEPA premise number 0243000165) or any subsequent owner or operator of the "PET Processors, LLC, 750 Bacon Road, Painesville, Ohio" shall not cause or permit the emission of sulfur dioxide from boiler numbers 7300071 and 8300073 (OEPA source numbers B001 and B002) to exceed 0.0 pounds of sulfur dioxide per MM Btu actual heat input from each boiler and shall operate said boilers such that their combined average operating rate shall not exceed one hundred six MM Btu per hour for any calendar day.

(E) The "Carmeuse Lime, Inc." (OEPA premise number 0243030257) or any subsequent owner or operator of the "Carmeuse Lime, Inc., Williams Street, Grand River, Ohio" shall not cause or permit the emission of sulfur dioxide from lime kiln numbers 4 and 5 (OEPA source numbers P001 and P002) to exceed a maximum of 10.0 pounds of sulfur dioxide per ton of product.

(F) The "Painesville Municipal Electric Plant" (OEPA premise number 0243110008) or any subsequent owner or operator of the "Painesville Municipal Electric Plant, 325 Richmond Street, Painesville, Ohio" shall not cause or permit the emission of sulfur dioxide from boiler numbers 3, 4 and 5 (OEPA source numbers B001, B003, and B004) to exceed a maximum of 5.7 pounds of sulfur dioxide per MM Btu actual heat input from each boiler and shall operate said boilers such that their combined average operating rate shall not exceed five hundred ninety-three MM Btu per hour for any calendar day.

(G) The "Cleveland Electric Illuminating Company, Eastlake Plant" (OEPA premise number 0243160009) or any subsequent owner or operator of the "Cleveland Electric Illuminating Company, Eastlake Plant, 10 Erie Road, Willoughby, Ohio" shall not cause or permit the emission of sulfur dioxide from boiler numbers 1 through 5

(OEPA source numbers B001 through B005) to exceed a maximum of 5.64 pounds of sulfur dioxide per MM Btu actual heat input from each boiler.

(H) [Reserved]

(I) The "Lincoln Electric Company" (OEPA premise number 0243080843) or any subsequent owner or operator of the "Lincoln Electric Company, Heisley Road, Mentor, Ohio" shall not cause or permit the emission of sulfur dioxide from boiler number 1 (OEPA source number B001) to exceed a maximum of 3.8 pounds of sulfur dioxide per MM Btu actual heat input.

Effective: 02/17/2011

R.C. 119.032 review dates: 11/30/2010 and 11/30/2015

CERTIFIED ELECTRONICALLY
Certification

02/07/2011
Date

Promulgated Under: 119.03
Statutory Authority: 3704.03(E)
Rule Amplifies: 3704.03(A), 3704.03(E)
Prior Effective Dates: 12/28/79

3745-18-50 **Lawrence county emission limits.**

(A) No owner or operator of any coal-fired steam generating unit, unless otherwise specified in this rule, shall cause or permit the emission of sulfur dioxide from any source to exceed a maximum of 4.5 pounds of sulfur dioxide per MM Btu actual heat input.

(B) [Reserved]

(C) The "South Point Ethanol" (OEPA premise number 0744000009) or any subsequent owner or operator of the "South Point Ethanol" facility located in South Point, Ohio shall not cause or permit the emission of sulfur dioxide from boiler numbers 1 through 7 (OEPA source numbers B009, B006, B007, B002, B003, B005 and B004 to exceed a maximum of 5.1 pounds of sulfur dioxide per MM Btu actual heat input from each boiler.

(D) The "Honeywell International, Inc." (OEPA premise number 0744010002) or any subsequent owner or operator of the "Honeywell International, Inc." facility located in Ironton, Ohio shall not cause or permit the emission of sulfur dioxide from boiler numbers 1-09-833, 3-09-832, 2-09-836, 4-09-2144, 5-09-1937, 6-09-1938, 7-09-216, 8-09-217, 9-09-1383, and 10-09-1384 (OEPA source numbers B001 through B010) to exceed a maximum of 1.0 pounds of sulfur dioxide per MM Btu actual heat input from each unit.

Replaces: 3745-18-50

Effective: 02/17/2011

R.C. 119.032 review dates: 11/30/2015

CERTIFIED ELECTRONICALLY
Certification

02/07/2011
Date

Promulgated Under: 119.03
Statutory Authority: 3704.03(E)
Rule Amplifies: 3704.03(A), 3704.03(E)
Prior Effective Dates: 12/28/79, 1/23/06

3745-18-51 **Licking county emission limits.**

(A) No owner or operator of any coal-fired steam generating unit, unless otherwise specified in this rule, shall cause or permit the emission of sulfur dioxide from any source to exceed a maximum of 4.5 pounds of sulfur dioxide per MM Btu actual heat input.

(B) The "Kaiser Aluminum and Chemical Corporation" (OEPA premise number 0145010093) or any subsequent owner or operator of the "Kaiser Aluminum and Chemical Corporation" facility located on State Route Number 79, South Heath, Ohio shall not cause or permit the emission of sulfur dioxide from boiler numbers 1 and 2 (OEPA source numbers B001 and B002) to exceed a maximum of 4.3 pounds of sulfur dioxide per MM Btu actual heat input from each boiler.

(C) The "Denison University" (OEPA premise number 0145000018) or any subsequent owner or operator of the "Denison University" facility located on South Main street, Granville, Ohio shall not cause or permit the emission of sulfur dioxide from the central heating plant FJ-18 number 48 (OEPA source number B001) to exceed a maximum of 6.2 pounds of sulfur dioxide per MM Btu actual heat input from each boiler.

(D) The "Owens-Corning Fiberglas" (OEPA premise number 0145020185) or any subsequent owner or operator of the "Owens-Corning Fiberglas" facility located on Case avenue, Newark, Ohio shall not cause or permit the emission of sulfur dioxide from the following sources to exceed the amounts indicated:

(1) D-5 furnace (OEPA source number P006); a maximum of 1.4 pounds of sulfur dioxide per ton of process weight.

(2) D-6 furnace (OEPA source number P007); a maximum of 1.4 pounds of sulfur dioxide per ton of process weight.

(3) F-5 furnace (OEPA source number P008); a maximum of 3.7 pounds of sulfur dioxide per ton of process weight.

(E) The "Newark Gardens Greenhouse" (OEPA premise number unassigned) or any subsequent owner or operator of the "Newark Gardens Greenhouse" facility located in Newark, Ohio shall not cause or permit the emission of sulfur dioxide from boiler number 1 (OEPA source number unassigned) to exceed a maximum of 6.0 pounds of sulfur dioxide per MM Btu actual heat input.

Effective: 02/17/2011

R.C. 119.032 review dates: 11/30/2010 and 11/30/2015

CERTIFIED ELECTRONICALLY
Certification

02/07/2011
Date

Promulgated Under: 119.03
Statutory Authority: 3704.03(E)
Rule Amplifies: 3704.03(A), 3704.03(E)
Prior Effective Dates: 12/28/79

3745-18-52 **Logan county emission limits.**

No owner or operator of any coal-fired steam generating unit shall cause or permit the emission of sulfur dioxide from any source to exceed a maximum of 3.6 pounds of sulfur dioxide per MM Btu actual heat input.

Effective: 02/17/2011

R.C. 119.032 review dates: 11/30/2010 and 11/30/2015

CERTIFIED ELECTRONICALLY
Certification

02/07/2011
Date

Promulgated Under: 119.03
Statutory Authority: 3704.03(E)
Rule Amplifies: 3704.03(A), 3704.03(E)
Prior Effective Dates: 12/28/79

3745-18-53 **Lorain county emission limits.**

(A) Except as otherwise specified in this rule, no owner or operator of any fossil-fuel fired steam generating unit shall cause or permit the emission of sulfur dioxide to exceed the following limits from any stack:

(1) The emission limit for sources between 10.0 and 100.0 MM Btu per hour total rated capacity shall be calculated from the following equation:

$$EL = 21.176\ Qm^{-0.5477}$$

where Qm is the total rated capacity in MM Btu per hour and EL is the allowed emission rate in pounds of sulfur dioxide per MM Btu actual heat input; and

(2) The emission limit for sources greater than, or equal to, 100.0 MM Btu per hour total rated capacity shall be 1.70 pounds of sulfur dioxide per MM Btu actual heat input.

(B) The "Cleveland Electric Illuminating Company, Avon Lake Plant" (OEPA premise number 0247030013) or any subsequent owner or operator of the "Cleveland Electric Illuminating Company, Avon Lake Plant, 33570 Lake Road, Avon Lake, Ohio" shall not cause or permit the emission of sulfur dioxide from the following sources to exceed the amounts indicated:

(1) Boiler numbers 1 through 8 and package boiler (OEPA source numbers B001 through B009); a maximum of 0.32 pounds of sulfur dioxide per MM Btu actual heat input from each boiler.

(2) Boiler unit numbers 6 through 9 (OEPA source numbers B014, and B010 through B012); a maximum of 4.65 pounds of sulfur dioxide per MM Btu actual heat input from each unit.

(C) The "Ohio Edison Company, Edgewater Plant" (OEPA premise number 0247080049) or any subsequent owner or operator of the "Ohio Edison Company, Edgewater Plant, 200 Oberlin Avenue, Lorain, Ohio" shall not cause or permit the emission of sulfur dioxide from the following sources to exceed the amounts indicated:

(1) Boiler numbers 11 through 13 (OEPA source numbers B001 through B003); a maximum of 3.4 pounds of sulfur dioxide per MM Btu actual heat input from each boiler.

(2) Combustion turbines "A" and "B" (OEPA source numbers B004 and B005); a maximum of 0.5 pounds of sulfur dioxide per MM Btu actual heat input from each turbine.

(D) The "Republic Engineered Products, Inc." (OEPA premise number 0247080229) or any subsequent owner or operator of the "Republic Engineered Products, Inc., 1807 East 28th Street, Lorain, Ohio" shall not cause or permit the combustion of coke-oven gas with a total sulfur content expressed as hydrogen sulfide in excess of 368 grains of hydrogen sulfide per one hundred dry standard cubic feet of coke-oven gas and shall not cause or permit the emission of sulfur dioxide from the following sources to exceed the amounts indicated:

(1) Blast furnace boiler numbers 1 through 9 (OEPA source numbers B001 through B009); a maximum of 1.2 pounds of sulfur dioxide per MM Btu actual heat input from each boiler and a maximum of 1760 pounds of sulfur dioxide per hour from all nine boilers.

(2) C.P. boiler numbers 10 through 12 (OEPA source numbers B010 through B012); a maximum of 1.98 pounds of sulfur dioxide per MM Btu actual heat input from each boiler.

(3) Blast furnace boiler number 13 (OEPA source number B013); a maximum of 0.31 pounds of sulfur dioxide per MM Btu actual heat input.

(4) All other operations, including soaking pit process operations and seamless rotary furnace number 4, a maximum of 1.98 pounds of sulfur dioxide per MM Btu actual heat input from each stack.

(5) Soaking pit process operations (OEPA source numbers P006 through P018); a maximum of 279 pounds of sulfur dioxide per hour from all twelve sources.

(6) Seamless rotary furnace number 4 (OEPA source number P029); a maximum of 178 pounds of sulfur dioxide per hour.

(E) The "Oberlin College" (OEPA premise number 0247100408); or any subsequent owner or operator of the "Oberlin College, 173 West Lorain Street, Oberlin, Ohio" shall not cause or permit the emission of sulfur dioxide from the following sources to exceed the amounts indicated:

(1) Boiler numbers 1 and 2 (OEPA source numbers B001 and B002); a maximum of 7.19 pounds of sulfur dioxide per MM Btu actual heat input from each boiler.

(2) Boiler number 4 (OEPA source number B003); a maximum of 0.36 pounds of sulfur dioxide per MM Btu actual heat input.

(F) The "B.F. Goodrich Company, Chemical Division, Avon Lake General Chemical Plant" (OEPA premise number 0247030004) or any subsequent owner or operator of the "B.F. Goodrich Company, Chemical Division, Avon Lake General Chemical Plant, Walker and Moore Roads, Avon Lake, Ohio" shall not cause or permit the emission of sulfur dioxide to exceed the amounts indicated:

(1) Boiler numbers 1, 2, 5, and 6 (OEPA source numbers B001 through B003, and B008); a maximum of 0.30 pounds of sulfur dioxide per MM Btu of actual heat input from each boiler.

(2) Boiler numbers 3 and 4 (OEPA source numbers B007 and B006); a maximum of 5.20 pounds of sulfur dioxide per MM Btu actual heat input from each boiler.

R.C. 119.032 review dates: 11/30/2010 and 11/30/2015

CERTIFIED ELECTRONICALLY
Certification

11/30/2010
Date

Promulgated Under: 119.03
Statutory Authority: 3704.03(E)
Rule Amplifies: 3704.03(A), 3704.03(E)
Prior Effective Dates: 12/28/79, 11/1/84, 3/21/00, 1/23/06

3745-18-54 **Lucas county emission limits.**

[Comment: For dates of non-regulatory government publications, publications of recognized organizations and associations, federal rules, and federal statutory provisions referenced in this rule, see paragraph (C) of rule 3745-18-01 of the Administrative Code titled "Referenced materials."]

(A) No owner or operator of any coal-fired steam generating unit, unless otherwise specified below, shall cause or permit the emission of sulfur dioxide from any source to exceed a maximum of 1.6 pounds of sulfur dioxide per MM Btu actual heat input.

(B) The "REXAM Beverage Can Company" (OEPA premise number 0448002007) or any subsequent owner or operator of the "REXAM Beverage Can Company, 10444 Swanton Road, Whitehouse, Ohio" shall not cause or permit the emission of sulfur dioxide from boiler numbers 1 through 3 (OEPA source numbers B001 through B003) to exceed a maximum of 1.0 pounds of sulfur dioxide per MM Btu actual heat input from each boiler.

(C) The "Mercy Hospital" (OEPA premise number 0448010026) or any subsequent owner or operator or of the "Mercy Hospital, 2200 Jefferson Avenue, Toledo, Ohio" shall not cause or permit the emission of sulfur dioxide from boiler numbers 1 through 3 (OEPA source numbers B001 through B003) to exceed a maximum of 1.5 pounds of sulfur dioxide per MM Btu actual heat input from each boiler and shall operate said boilers such that the combined average operating rate does not exceed 35 MM Btu per hour for any calendar day.

(D) The "Toledo Hospital" (OEPA premise number 0448010037) or any subsequent owner or operator of the "Toledo Hospital, 2142 North Cove Boulevard, Toledo, Ohio" shall not cause or permit the emission of sulfur dioxide from boiler numbers 1 through 3 (OEPA source numbers B001 through B003) to exceed a maximum of 3.5 pounds of sulfur dioxide per MM Btu actual heat input from each boiler.

(E) [Reserved]

(F) The "St. Vincent Medical Center" (OEPA premise number 0448010051) or any subsequent owner or operator of the "St. Vincent Hospital and Medical Center, 2213 Cherry Street, Toledo, Ohio" shall not cause or permit the emission of sulfur dioxide from boiler numbers 1 through 3 (OEPA source numbers B001 through B003) to exceed a maximum of 1.0 pounds of sulfur dioxide per MM Btu actual heat input from each boiler.

(G) [Reserved]

(H) [Reserved]

(I) The "Multifoods Manufacturing, Inc." (OEPA premise number 0448010064) or any subsequent owner or operator of the "Multifoods Manufacturing, Inc., 1250 Laskey Road, Toledo, Ohio" shall not cause or permit the emission of sulfur dioxide from boiler numbers 3, 2, and 1 (OEPA source numbers B001, B002, and B003) to exceed a maximum of 1.0 pounds of sulfur dioxide per MM Btu actual heat input from each boiler.

(J) [Reserved]

(K) The "Textileather Corporation" (OEPA premise number 0448010075) or any subsequent owner or operator of the "Textileather Corporation, 3729 Twining Street, Toledo, Ohio" shall not cause or permit the emission of sulfur dioxide from boiler numbers 1 and 2 (OEPA source numbers B001 and B002) to exceed a maximum of 1.0 pounds of sulfur dioxide per MM Btu actual heat input from each boiler.

(L) [Reserved]

(M) [Reserved]

(N) [Reserved]

(O) The "Sun Company, Incorporated (R&M)" (OEPA premise number 0448010246) or any subsequent owner or operator of the "Sun Company, Incorporated (R&M), Woodville Road, Oregon, Ohio" shall not cause or permit the emission of sulfur dioxide from any source to exceed the amounts indicated:

(1) Except as specified in paragraphs (O)(2) to (O)(9) of this rule, 0.04 pounds of sulfur dioxide per MM Btu actual heat input from any fuel burning unit.

(2) [Reserved]

(3) FCC unit and CO boilers H-021-03, and H-021-04 (OEPA source numbers P011, B046, and B047); a maximum of 3.00 pounds of sulfur dioxide per one thousand pounds of fresh feed.

(4) [Reserved]

(5) Heater number H-507 (OEPA source number B010); shall not burn fuel oil, and shall comply with 40 CFR Part 60, Subpart J, "Standards of Performance for Petroleum Refineries."

(6) [Reserved]

(7) Heater number 9401 (OEPA source number B048); shall not burn fuel oil, and shall comply with 40 CFR Part 60, Subpart J, "Standards of Performance for Petroleum Refineries."

(8) [Reserved]

(9) Amine Claus sulfur recovery unit (OEPA source number P012); a maximum of 0.025 per cent by volume of sulfur dioxide at zero per cent oxygen on a dry basis.

(P) The "Medical College of Ohio" (OEPA premise number 0448010247) or any subsequent owner or operator of the "Medical College of Ohio, 930 Detroit Avenue, Toledo, Ohio" shall not cause or permit the emission of sulfur dioxide from boiler numbers 1 through 3 (OEPA source numbers B001 through B003) to exceed a maximum of 1.5 pounds of sulfur dioxide per MM Btu actual heat input from each boiler.

(Q) [Reserved]

(R) The "Daimler Chrysler Corp." (OEPA premise number 0448010413) or any subsequent owner or operator of the "Daimler Chrysler Corp., 940 North Cove Boulevard, Toledo, Ohio" shall not cause or permit the emission of sulfur dioxide from boiler numbers 1 through 10 (OEPA source numbers B001 through B010); to exceed a maximum of 1.5 pounds of sulfur dioxide per MM Btu actual heat input from each boiler.

(S) The "Daimler Chrysler Corp." (OEPA premise number 0448010414) or any subsequent owner or operator of the "Daimler Chrysler Corp., 4000 Stickney Avenue, Toledo, Ohio" shall not cause or permit the emission of sulfur dioxide from boiler numbers 1 and 2 (OEPA source numbers B001 and B002) to exceed a maximum of 1.5 pounds of sulfur dioxide per MM Btu actual heat input from each boiler.

(T) The "University of Toledo" (OEPA premise number 0448010805) or any subsequent owner or operator of the "University of Toledo, 2801 West Bancroft Street, Toledo, Ohio" shall not cause or permit the emission of sulfur dioxide from boiler numbers 2 and 4 (OEPA source numbers B002 and B010) to exceed 1.0 pounds of sulfur dioxide per MM Btu actual heat input from each boiler.

(U) [Reserved]

(V) The "Toledo Edison Company, Bay Shore Station" (OEPA premise number 0448020006) or any subsequent owner or operator of the "Toledo Edison Company, Bay Shore Station, Bay Shore Road, Oregon, Ohio" shall not cause or permit the emission of sulfur dioxide from the following sources to exceed the amounts indicated:

(1) Boiler numbers 1 through 4 (OEPA source numbers B001 through B004); a maximum of 1.94 pounds of sulfur dioxide per MM Btu actual heat input from each boiler.

(2) Bay Shore Peaker (OEPA source number B005); a maximum of 0.4 pounds of sulfur dioxide per MM Btu actual heat input.

(W) The "BP Products North America, Inc." (OEPA premise number 0448020007) or any subsequent owner or operator of the "BP Products North America, Inc., Toledo Refinery, Cedar Point Road, Oregon, Ohio" shall not cause or permit the emission of sulfur dioxide from the following sources to exceed the amounts indicated:

(1) Except as specified in paragraphs (W)(2) to (W)(7) of this rule, 0.29 pounds of sulfur dioxide per MM Btu actual heat input from any fuel burning unit.

(2) Process numbers PR-6945, PR-6968, and asphalt oxidizer D-1100 (OEPA source numbers P010, P011, and P008); a maximum of 0.40 pounds of sulfur dioxide per ton of actual process weight input for any process.

(3) Heater numbers F-1001A, F-1001B, F-1002A, F-1002B, F-1003, F-1004A, and F-1004B (OEPA source number B024); a maximum of 1.00 pounds of sulfur dioxide per MM Btu actual heat input from each heater.

(4) Heater number PR-2904 (alky 2 rerun) (OEPA source number B021); a maximum of 0.50 pounds of sulfur dioxide per MM Btu actual heat input.

(5) Heater numbers PR-2992, PR-2993, PR-2955, F-260, external asphalt heater, and boiler number PR-2967 (OEPA source numbers B009, B010, B018, B023, B025, and B020); a maximum of 0.57 pounds of sulfur dioxide per MM Btu actual heat input from each unit.

(6) PR-1023 FCC regenerator (OEPA source number P007); a maximum of 0.92 pounds of sulfur dioxide per one thousand pounds of fresh feed.

(7) Sulfur recovery unit (OEPA source number P009); a maximum of 0.025 per cent by volume of sulfur dioxide at zero per cent oxygen on a dry basis.

(X) The "Marsulex, Inc." (OEPA premise number 0448020014) or any subsequent owner or operator of the "Marsulex, Inc., 1400 Otter Creek Road, Oregon, Ohio" shall not cause or permit the emission of sulfur dioxide from the contact sulfuric acid plant (OEPA source numbers P001 and P002) to exceed a maximum of 6.50 pounds of sulfur dioxide per ton of one hundred per cent acid produced.

(Y) The "General Motors Corporation, Chevrolet Motor Division" (OEPA premise number 0448010404) or any subsequent owner or operator of the "General Motors Corporation, Chevrolet Motor Division, 1455 West Alexis Road, Toledo, Ohio" shall

not cause or permit the emission of sulfur dioxide from boiler numbers BT-23005 through BT-23007, and BT-23018 (OEPA source numbers B001 through B004) to exceed a maximum of 1.0 pounds of sulfur dioxide per MM Btu actual heat input from each boiler.

Effective: 04/03/2011

R.C. 119.032 review dates: 11/30/2010 and 11/30/2015

CERTIFIED ELECTRONICALLY
Certification

03/24/2011
Date

Promulgated Under: 119.03
Statutory Authority: 3704.03(E)
Rule Amplifies: 3704.03(A), 3704.03(E)
Prior Effective Dates: 12/28/1979, 11/1/1984, 10/31/96, 3/27/06

3745-18-55 **Madison county emission limits.**

(A) No owner or operator of any coal-fired steam generating unit, unless otherwise specified in this rule, shall cause or permit the emission of sulfur dioxide from any source to exceed the maximum of 3.6 pounds of sulfur dioxide per MM Btu actual heat input.

(B) The "London Correctional Institute" (OEPA premise number 0149010062) or any subsequent owner or operator of the "London Correctional Institute" facility located in London, Ohio shall not cause or permit the emission of sulfur dioxide from boiler numbers 1 through 3 (OEPA source numbers B001 through B003) to exceed a maximum of 7.0 pounds of sulfur dioxide per MM Btu actual heat input from each boiler.

Effective: 02/17/2011

R.C. 119.032 review dates: 11/30/2010 and 11/30/2015

CERTIFIED ELECTRONICALLY
Certification

02/07/2011
Date

Promulgated Under: 119.03
Statutory Authority: 3704.03(E)
Rule Amplifies: 3704.03(A), 3704.03(E)
Prior Effective Dates: 12/28/79

3745-18-56 **Mahoning county emission limits.**

(A) No owner or operator of any coal-fired steam generating unit, unless otherwise specified in this rule, shall cause or permit the emission of sulfur dioxide from any source to exceed a maximum of 5.4 pounds of sulfur dioxide per MM Btu actual heat input.

(B) The "Whitacre-Greer Fireproofing Company" (OEPA premise number 0250000005) or any subsequent owner or operator of the "Whitacre-Greer Fireproofing Company, 1400 South Mahoning Avenue, Alliance, Ohio" shall not cause or permit the emission of sulfur dioxide from kiln numbers 1 and 2 (OEPA source numbers P004 and P005) to exceed a maximum of 20.0 pounds of sulfur dioxide per ton of actual process weight input from each kiln.

(C) [Reserved]

(D) [Reserved]

(E) The "Youngstown Thermal Corporation" (OEPA premise number 0250110024) or any subsequent owner or operator of the "Youngstown Thermal Corporation 205 North Avenue, Youngstown, Ohio" shall not cause or permit the emission of sulfur dioxide from boiler numbers 1 through 4 (OEPA source numbers B001 through B004) to exceed a maximum of 4.7 pounds of sulfur dioxide per MM Btu actual heat input from each boiler.

(F) The "Koppers Company, Incorporated" (OEPA premise number 0250110146) or any subsequent owner or operator of the "Koppers Company, Incorporated, 1359 Logan Avenue, Youngstown, Ohio" shall not cause or permit the emission of sulfur dioxide from boiler numbers 3 and 4 (OEPA source numbers B001 and B006) to exceed a maximum of 0.85 pounds of sulfur dioxide per MM Btu actual heat input from each boiler.

(G) The "Republic Steel Corporation" (OEPA premise number 0250110464) or any subsequent owner or operator of the "Republic Steel Corporation, Poland Avenue, Youngstown, Ohio" shall not cause or permit the emission of sulfur dioxide from the following sources to exceed the amounts indicated:

(1) Number 3 boilerhouse: boiler numbers 1 through 4, number 5 boilerhouse: boiler numbers 1 and 2, and number 1 boilerhouse: boiler numbers 1 and 2 (OEPA source numbers B001, B005, B006, B007, B002, B004, B003, and B008); a maximum of 5.1 pounds of sulfur dioxide per MM Btu actual heat input from each boiler and a total of four thousand four hundred sixty-five tons of sulfur dioxide per any continuous three-hundred-sixty-five-day period.

(2) Coke oven batteries "B" and "C" (OEPA source numbers B901 and B902); from the combustion of coke oven gas containing hydrogen sulfide, four hundred fifty grains of hydrogen sulfide per one hundred dry standard cubic feet of coke oven gas and a maximum of 2.3 pounds of sulfur dioxide per MM Btu actual heat input.

(3) Ingot soaking pit row numbers 1 through 8: coke oven gas-fired soaking pit furnaces (OEPA source number P008); from the combustion of coke oven gas containing hydrogen sulfide, four hundred fifty grains of hydrogen sulfide per one hundred dry standard cubic feet of coke oven gas and a maximum of 2.3 pounds of sulfur dioxide per MM Btu actual heat input.

(4) 16" - 14" bar mill coke oven gas-fired slab reheating furnace (OEPA source number P009); from the combustion of coke oven gas containing hydrogen sulfide, four hundred fifty grains of hydrogen sulfide per one hundred dry standard cubic feet of coke oven gas and a maximum of 2.3 pounds of sulfur dioxide per MM Btu actual heat input.

(5) Continuous stretch reducing reheat furnace (OEPA source number P010); from the combustion of coke oven gas containing hydrogen sulfide, four hundred fifty grains of hydrogen sulfide per one hundred dry standard cubic feet of coke oven gas and a maximum of 2.3 pounds of sulfur dioxide per MM Btu actual heat input.

(6) Pipe galvanizing line (OEPA source number P011); from the combustion of coke oven gas containing hydrogen sulfide, four hundred fifty grains of hydrogen sulfide per one hundred dry standard cubic feet of coke oven gas and a maximum of 2.3 pounds of sulfur dioxide per MM Btu actual heat input.

(H) The "Youngstown Sinter Plant" (OEPA premise number 0250110617) or any subsequent owner or operator of the "Youngstown Sinter Plant, 251 Division Street, Youngstown, Ohio" shall not cause or permit the emission of sulfur dioxide from the Mahoning Valley sinter plant (OEPA source number P001) to exceed a maximum of 3.3 pounds of sulfur dioxide per ton of process weight.

Effective: 02/17/2011

R.C. 119.032 review dates: 11/30/2010 and 11/30/2015

CERTIFIED ELECTRONICALLY
Certification

02/07/2011
Date

Promulgated Under: 119.03
Statutory Authority: 3704.03(E)
Rule Amplifies: 3704.03(A), 3704.03(E)
Prior Effective Dates: 12/28/79, 11/1/84, 3/17/99, 9/1/03

3745-18-57 **Marion county emission limits.**

(A) No owner or operator of any coal-fired steam generating unit, unless otherwise specified in this rule, shall cause or permit the emission of sulfur dioxide from any source to exceed a maximum of 6.1 pounds of sulfur dioxide per MM Btu actual input.

(B) The "Bunge North American (East), LLC" (OEPA premise number 0351010002) or any subsequent owner or operator of the "Bunge North American (East), LLC" facility located at 751 East Farming street, Marion, Ohio shall not cause or permit the emission of sulfur dioxide from the 270 HP boiler and 400 HP boiler (OEPA source numbers B002 and B003) to exceed a maximum of 6.1 pounds of sulfur dioxide per MM Btu actual heat input from each boiler.

(C) The "Huber Corporation" (OEPA premise number 0351010132) or any subsequent owner or operator of the "Huber Corporation" facility located at 202 North Greenwood street, Marion, Ohio shall not cause or permit the emission of sulfur dioxide from boiler numbers 1 and 2 (OEPA source number B002) to exceed a maximum of 6.1 pounds of sulfur dioxide per MM Btu actual heat input from each boiler.

(D) [Reserved]

(E) The "Marion Correctional Institution" (OEPA premise number 0351010182) or any subsequent owner or operator of the "Marion Correctional Institution" facility located in Marion, Ohio shall not cause or permit the emission of sulfur dioxide from boiler numbers 1 through 4 (OEPA source numbers B001 through B004) to exceed a maximum of 6.1 pounds of sulfur dioxide per MM Btu actual heat input from each boiler.

Effective: 02/17/2011

R.C. 119.032 review dates: 11/30/2010 and 11/30/2015

CERTIFIED ELECTRONICALLY
Certification

02/07/2011
Date

Promulgated Under: 119.03
Statutory Authority: 3704.03(E)
Rule Amplifies: 3704.03(A), 3704.03(E)
Prior Effective Dates: 12/28/79, 1/23/06

3745-18-58 **Medina county emission limits.**

No owner or operator of any coal-fired steam generating unit shall cause or permit the emission of sulfur dioxide from any source to exceed a maximum of 8.0 pounds of sulfur dioxide per MM Btu actual heat input.

Replaces: 3745-18-58

Effective: 02/17/2011

R.C. 119.032 review dates: 11/30/2015

CERTIFIED ELECTRONICALLY
Certification

02/07/2011
Date

Promulgated Under: 119.03
Statutory Authority: 3704.03(E)
Rule Amplifies: 3704.03(A), 3704.03(E)
Prior Effective Dates: 12/28/79

3745-18-59 **Meigs county emission limits.**

No owner or operator of any coal-fired steam generating unit, unless otherwise specified in this rule, shall cause or permit the emission of sulfur dioxide from any source to exceed a maximum of 4.5 pounds of sulfur dioxide per MM Btu actual heat input.

Replaces: 3745-18-59

Effective: 02/17/2011

R.C. 119.032 review dates: 11/30/2015

CERTIFIED ELECTRONICALLY
Certification

02/07/2011
Date

Promulgated Under: 119.03
Statutory Authority: 3704.03(E)
Rule Amplifies: 3704.03(A), 3704.03(E)
Prior Effective Dates: 12/28/79

3745-18-60 **Mercer county emission limits.**

No owner or operator of any coal-fired steam generating unit shall cause or permit the emission of sulfur dioxide from any source to exceed a maximum of 8.0 pounds of sulfur dioxide per MM Btu actual heat input.

Replaces: 3745-18-60

Effective: 02/17/2011

R.C. 119.032 review dates: 11/30/2015

CERTIFIED ELECTRONICALLY
Certification

02/07/2011
Date

Promulgated Under: 119.03
Statutory Authority: 3704.03(E)
Rule Amplifies: 3704.03(A), 3704.03(E)
Prior Effective Dates: 12/28/79

3745-18-61 **Miami county emission limits.**

(A) No owner or operator of any coal-fired steam generating unit, unless otherwise specified in this rule, shall cause or permit the emission of sulfur dioxide from any source to exceed a maximum of 3.2 pounds of sulfur dioxide per MM Btu actual heat input.

(B) The "Piqua Municipal Power System" (OEPA premise number 0855100041) or any subsequent owner or operator of the "Piqua Municipal Power System" facility located at 919 South Main street, Piqua, Ohio shall not cause or permit the emission of sulfur dioxide from the following sources to exceed the amounts indicated:

(1) Boiler numbers 4 through 6 (OEPA source numbers B001 through B003) a maximum of 4.8 pounds of sulfur dioxide per MM Btu actual heat input from each boiler.

(2) FT number 8 oil-fired boiler (OEPA source number B007); a maximum of 0.5 pounds of sulfur dioxide per MM Btu actual heat input.

(C) [Reserved]

(D) [Reserved]

(E) The "ITW Food Equipment Group 27" (OEPA premise number 0855140112) or any subsequent owner or operator of the "ITW Food Equipment Group 27" facility located at 701 Ridge ave., Troy, Ohio shall not cause or permit the emission of sulfur dioxide from boiler numbers 1 through 3 (OEPA source numbers B001 through B003) to exceed a maximum of 3.2 pounds of sulfur dioxide per MM Btu actual heat input from each boiler.

Effective: 02/17/2011

R.C. 119.032 review dates: 11/30/2010 and 11/30/2015

CERTIFIED ELECTRONICALLY
Certification

02/07/2011
Date

Promulgated Under: 119.03
Statutory Authority: 3704.03(E)
Rule Amplifies: 3704.03(A), 3704.03(E)
Prior Effective Dates: 12/28/79, 1/23/06

3745-18-62 **Monroe county emission limits.**

(A) No owner or operator of any coal-fired steam generating unit, unless otherwise specified in this rule, shall cause or permit the emission of sulfur dioxide from any source to exceed a maximum of 4.5 pounds of sulfur dioxide per MM Btu actual heat input.

(B) The "Ormet Primary Aluminum Corporation" (OEPA premise number 0656000001) or any subsequent owner of the "Ormet Primary Aluminum Corporation, Ohio Route 7, Hannibal, Ohio" shall not cause or permit the emission of sulfur dioxide from the following sources to exceed the amounts indicated:

(1) Anode furnace numbers 1 through 5 (OEPA source numbers P096 through P100); a combined maximum of 2.7 pounds of sulfur dioxide per ton of molten aluminum produced.

(2) Aluminum reduction cell numbers 1A through 6B (OEPA source numbers P955 through P978); a combined maximum of 39.2 pounds sulfur dioxide per ton of molten aluminum produced.

Effective: 02/17/2011

R.C. 119.032 review dates: 11/30/2010 and 11/30/2015

CERTIFIED ELECTRONICALLY
Certification

02/07/2011
Date

Promulgated Under: 119.03
Statutory Authority: 3704.03(E)
Rule Amplifies: 3704.03(A), 3704.03(E)
Prior Effective Dates: 9/28/79, 9/1/03

3745-18-63 **Montgomery county emission limits.**

(A) No owner or operator of any coal-fired steam generating unit, unless otherwise specified in this rule, shall cause or permit the emission of sulfur dioxide from any source to exceed a maximum of 1.5 pounds of sulfur dioxide per MM Btu actual heat input.

(B) [Reserved]

(C) [Reserved]

(D) [Reserved]

(E) [Reserved]

(F) [Reserved]

(G) The "Delphi AHG Home Ave." (OEPA premise number 0857040931) or any subsequent owner or operator of the "Inland Division, General Motors Corporation Delphi AHG Home Ave., 2727 Inland Avenue, Dayton, Ohio" shall not cause or permit the emission of sulfur dioxide from boiler numbers 4 through 6 (OEPA source numbers B001 through B003) to exceed a maximum of 1.6 pounds of sulfur dioxide per MM Btu actual heat input from each boiler.

(H) [Reserved]

(I) The "DP&L Tait Generating Station" (OEPA premise number 0857042072) or any subsequent owner or operator of the "DP&L Tait Generating Station, 2101 Arbor Blvd., Dayton, Ohio" shall not cause or permit the emission of sulfur dioxide from the following sources to exceed the amounts indicated:

(1) Boiler numbers 7-1, 7-2, 8-1, and 8-2 (OEPA source numbers B001, B002, B005, and B004); a maximum of 0.5 pounds of sulfur dioxide per MM Btu actual heat input from each boiler.

(2) Boiler numbers 4 and 5 (OEPA source numbers B003 and B006); a maximum of 1.8 pounds of sulfur dioxide per MM Btu actual heat input from each boiler.

(3) Diesel IC units 1 through 4 (OEPA source numbers B507 through B510); a maximum of 0.5 pounds of sulfur dioxide per MM Btu actual heat input from each unit.

(J) The "Harrison Radiator Division, General Motors Corporation" (OEPA premise number 0857100030) or any subsequent owner or operator of the "Harrison Radiator Division, General Motors Corporation, Dayton, Ohio" shall not cause or permit the

emission of sulfur dioxide from boiler numbers 1 through 8 (OEPA source numbers B001 through B008) to exceed a maximum of 1.6 pounds of sulfur dioxide per MM Btu actual heat input from each boiler.

(K) The "Appleton Papers, Inc." (OEPA premise number 0857190001) or any subsequent owner or operator of the "Appleton Papers, Inc., West Carrollton, Ohio" shall not cause or permit the emission of sulfur dioxide from boiler numbers 2 and 4 (OEPA source numbers B002 and B003) to exceed a maximum of 1.6 pounds of sulfur dioxide per MM Btu actual heat input from each boiler.

(L) [Reserved]

(M) The "Dayton Power and Light Company, O.H. Hutchings Station" (OEPA premise number 0857780013) or any subsequent owner or operator of the "Dayton Power and Light Company, O.H. Hutchings Station, 9200 Chautauqua Road, Miamisburg, Ohio" shall not cause or permit the emission of sulfur dioxide from the following sources to exceed the amounts indicated:

(1) Boiler numbers 1 through 6 (OEPA source numbers B001 through B006); a maximum of 1.6 pounds of sulfur dioxide per MM Btu actual heat input from each boiler.

(2) Turbine number 7 (OEPA source number B007); a maximum of 0.5 pounds of sulfur dioxide per MM Btu actual heat input.

(N) The "Dayton Power and Light Company, Yankee Substation" (OEPA premise number 0857810015) or any subsequent owner or operator of the "Dayton Power and Light Company, Yankee Substation, 9955 Yankee Road, Dayton, Ohio" shall not cause or permit the emission of sulfur dioxide from turbine numbers 1 through 7 (OEPA source numbers B001 through B007) to exceed a maximum of 0.5 pounds of sulfur dioxide per MM Btu actual heat input from each turbine.

(O) The "Delphi AHG" (OEPA premise number 0857040018) or any subsequent owner or operator of the "Delphi AHG, 3100 Needmore Road, Dayton, Ohio" shall not cause or permit the emission of sulfur dioxide from boiler numbers 1 through 4 (OEPA source numbers B001 through B004) to exceed a maximum of 1.3 pounds of sulfur dioxide per MM Btu actual heat input from each boiler.

(P) The "Delphi AHG" (OEPA premise number 0857170125) or any subsequent owner or operator of the "Delphi AHG, North Dixie Highway, Vandalia, Ohio" shall not cause or permit the emission of sulfur dioxide from boiler numbers 1 through 4 (OEPA source numbers B001 through B004) to exceed a maximum of 1.6 pounds of sulfur dioxide per MM Btu actual heat input from each boiler.

(Q) The "Delphi AHG" (OEPA premise number 0857080148) or any subsequent owner or operator of the "Delphi AHG, 2000 Forrer Boulevard, Dayton, Ohio" shall not

cause or permit the emission of sulfur dioxide from the following sources to exceed the amounts indicated:

(1) Boiler numbers 1 and 2 (OEPA source numbers B001 and B002); a maximum of 0.5 pounds of sulfur dioxide per MM Btu actual heat input from each boiler.

(2) Boiler numbers 3 and 4 (OEPA source numbers B003 and B004); a maximum of 1.2 pounds of sulfur dioxide per MM Btu actual heat input from each boiler.

(R) [Reserved]

(S) [Reserved]

(T) The "Tate & Lyle, Incorporated" (OEPA premise number 0857041333) or any subsequent owner or operator of the "Tate & Lyle, Incorporated, 5600 Brentlinger Drive, Dayton, Ohio" shall not cause or permit the emission of sulfur dioxide from unit numbers 1 and 2 (OEPA source numbers B001 and B002) to exceed a maximum of 0.8 pounds of sulfur dioxide per MM Btu actual heat input from each boiler.

Effective: 02/17/2011

R.C. 119.032 review dates: 11/30/2010 and 11/30/2015

CERTIFIED ELECTRONICALLY
Certification

02/07/2011
Date

Promulgated Under: 119.03
Statutory Authority: 3704.03(E)
Rule Amplifies: 3704.03(A), 3704.03(E)
Prior Effective Dates: 12/28/79, 11/1/84, 1/23/06

3745-18-64 **Morgan county emission limits.**

(A) No owner or operator of any coal-fired steam generating unit, unless otherwise specified in this rule, shall cause or permit the emission of sulfur dioxide from any source to exceed a maximum of 4.5 pounds of sulfur dioxide per MM Btu actual heat input.

(B) The "Ohio Power Company, Muskingum River Plant" (OEPA premise number 0684000000) or any subsequent owner or operator of the "Ohio Power Company, Muskingum River Plant" facility located in Beverly, Ohio shall not cause or permit the emission of sulfur dioxide from the following sources to exceed the amounts indicated:

(1) Boiler numbers 1 through 5 (OEPA source numbers B002 through B006); a maximum of 8.6 pounds of sulfur dioxide per MM Btu actual heat input from each boiler prior to July 1, 1989;

(2) Boiler numbers 1 through 5 (OEPA source numbers B002 through B006); a maximum of 7.6 pounds of sulfur dioxide per MM Btu actual heat input from each boiler on and after July 1, 1989;

(3) Unit 5 auxiliary boiler (OEPA source number B001); a maximum of 1.2 pounds of sulfur dioxide per MM Btu actual heat input.

Effective: 02/17/2011

R.C. 119.032 review dates: 11/30/2010 and 11/30/2015

CERTIFIED ELECTRONICALLY
Certification

02/07/2011
Date

Promulgated Under: 119.03
Statutory Authority: 3704.03(E)
Rule Amplifies: 3704.03(A), 3704.03(E)
Prior Effective Dates: 12/28/79, 4/21/82, 10/1/82

3745-18-65 **Morrow county emission limits.**

No owner or operator of any coal-fired steam generating unit shall cause or permit the emission of sulfur dioxide from any source to exceed a maximum of 2.6 pounds of sulfur dioxide per MM Btu actual heat input.

Effective: 02/17/2011

R.C. 119.032 review dates: 11/30/2010 and 11/30/2015

CERTIFIED ELECTRONICALLY
Certification

02/07/2011
Date

Promulgated Under: 119.03
Statutory Authority: 3704.03(E)
Rule Amplifies: 3704.03(A), 3704.03(E)
Prior Effective Dates: 12/28/79

3745-18-66 **Muskingum county emission limits.**

(A) No owner or operator of any coal-fired steam generating unit, unless otherwise specified in this rule, shall cause or permit the emission of sulfur dioxide from any source to exceed a maximum of 4.5 pounds of sulfur dioxide per MM Btu actual heat input.

(B) [Reserved]

(C) The "AK Steel Corporation" (OEPA premise number 0660010006) or any subsequent owner or operator of the "AK Steel Corporation, 1724 Linden Avenue, Zanesville, Ohio" shall not cause or permit the emission of sulfur dioxide from boiler numbers 2 and 3 (OEPA source numbers B002 and B003) to exceed 6.1 pounds of sulfur dioxide per MM Btu actual heat input from each boiler.

(D) [Reserved]

(E) The "Owens Brockway Glass Company" (OEPA premise number 0660010007) or any subsequent owner or operator of the "Owens Brockway Glass Company, 1700 State Street, Zanesville, Ohio" shall not cause or permit the emission of sulfur dioxide from the following sources to exceed the amounts indicated:

(1) Tank number 15 (OEPA source number P001); a maximum of 3.5 pounds of sulfur dioxide per ton of glass produced.

(2) Tank number 16 (OEPA source number P002); a maximum of 13.0 pounds of sulfur dioxide per ton of glass produced.

Effective: 02/17/2011

R.C. 119.032 review dates: 11/30/2010 and 11/30/2015

CERTIFIED ELECTRONICALLY
Certification

02/07/2011
Date

Promulgated Under: 119.03
Statutory Authority: 3704.03(E)
Rule Amplifies: 3704.03(A), 3704.03(E)
Prior Effective Dates: 12/28/79, 5/11/87, 1/23/06

3745-18-67 **Noble county emission limits.**

No owner or operator of any coal-fired steam generating unit shall cause or permit the emission of sulfur dioxide from any source to exceed a maximum of 4.5 pounds of sulfur dioxide per MM Btu actual heat input.

Replaces: 3745-18-67

Effective: 02/17/2011

R.C. 119.032 review dates: 11/30/2015

CERTIFIED ELECTRONICALLY
Certification

02/07/2011
Date

Promulgated Under: 119.03
Statutory Authority: 3704.03(E)
Rule Amplifies: 3704.03(A), 3704.03(E)
Prior Effective Dates: 12/28/79

3745-18-68 **Ottawa county emission limits.**

(A) No owner or operator of any coal-fired steam generating unit, unless otherwise specified in this rule, shall cause or permit the emission of sulfur dioxide from any source to exceed a maximum of 5.9 pounds of sulfur dioxide per MM Btu actual heat input.

(B) The "United States Gypsum Company" (OEPA premise number 0362000078) or any subsequent owner or operator of the "United States Gypsum Company" facility located in Gypsum, Ohio shall not cause or permit the emission of sulfur dioxide from boiler numbers 1 and 2 (OEPA source numbers B004 and B005) to exceed a maximum of 5.9 pounds of sulfur dioxide per MM Btu actual heat input from each boiler.

(C) The "Graymont Dolime (OH), Inc." (OEPA premise number 0362000079) or any subsequent owner or operator of the "Graymont Dolime (OH), Inc." facility located at 21880 West State Route Number 163, Genoa, Ohio shall not cause or permit the emission of sulfur dioxide from the rotary kilns 1, 2 and 3 (OEPA source numbers P010, P014 and P015) to exceed a maximum of 14.9 pounds of sulfur dioxide per ton of product.

Effective: 02/17/2011

R.C. 119.032 review dates: 11/30/2010 and 11/30/2015

CERTIFIED ELECTRONICALLY
Certification

02/07/2011
Date

Promulgated Under: 119.03
Statutory Authority: 3704.03(E)
Rule Amplifies: 3704.03(A), 3704.03(E)
Prior Effective Dates: 12/28/79, 1/23/06

3745-18-69 **Paulding county emission limits.**

(A) No owner or operator of any coal-fired steam generating unit, unless otherwise specified in this rule, shall cause or permit the emission of sulfur dioxide from any source to exceed a maximum of 2.6 pounds of sulfur dioxide per MM Btu actual heat input.

(B) "Lafarge North America" (OEPA premise number 0363000002) or any subsequent owner or operator of the "Lafarge North America" facility located on County road 176, Paulding, Ohio shall not cause or permit the emission of sulfur dioxide from numbers 1 and 2 kilns (OEPA source numbers P014 and P015) to exceed a maximum of 43.0 pounds of sulfur dioxide per ton of cement produced.

Effective: 02/17/2011

R.C. 119.032 review dates: 11/30/2010 and 11/30/2015

CERTIFIED ELECTRONICALLY
Certification

02/07/2011
Date

Promulgated Under: 119.03
Statutory Authority: 3704.03(E)
Rule Amplifies: 3704.03(A), 3704.03(E)
Prior Effective Dates: 12/28/79, 1/23/06

3745-18-70 **Perry county emission limits.**

No owner or operator of any coal-fired steam generating unit shall cause or permit the emission of sulfur dioxide from any source to exceed a maximum of 4.5 pounds of sulfur dioxide per MM Btu actual heat input.

Effective: 02/17/2011

R.C. 119.032 review dates: 11/30/2010 and 11/30/2015

CERTIFIED ELECTRONICALLY
Certification

02/07/2011
Date

Promulgated Under: 119.03
Statutory Authority: 3704.03(E)
Rule Amplifies: 3704.03(A), 3704.03(E)
Prior Effective Dates: 12/28/79

3745-18-71 **Pickaway county emission limits.**

(A) No owner or operator of any coal-fired steam generating unit, unless otherwise specified in this rule, shall cause or permit the emission of sulfur dioxide from any source to exceed a maximum of 3.6 pounds of sulfur dioxide per MM Btu actual heat input.

(B) The "Columbus Southern Power Company, Picway Generating Plant" (OEPA premise number 0165000006) or any subsequent owner or operator of the "Columbus Southern Power Company, Picway Generating Plant" facility located in Lockbourne, Ohio shall not cause or permit the emission of sulfur dioxide from the following sources to exceed the amounts indicated:

(1) Boiler numbers 7, 8 and 9 (OEPA source numbers B001, B002 and B004); a maximum of 5.6 pounds of sulfur dioxide per MM Btu actual heat input from each boiler.

(2) Unit number 6 jet (OEPA source number B003); a maximum of 1.2 pounds of sulfur dioxide per MM Btu actual heat input.

(C) The "Orient State Institute" (OEPA premise number 0165000010) or any subsequent owner or operator of the "Orient State Institute" facility located in Orient, Ohio shall not cause or permit the emission of sulfur dioxide from boiler numbers 1 through 4 (OEPA source numbers B001 through B004) to exceed a maximum of 8.0 pounds of sulfur dioxide per MM Btu actual heat input from each boiler.

Effective: 02/17/2011

R.C. 119.032 review dates: 11/30/2010 and 11/30/2015

CERTIFIED ELECTRONICALLY
Certification

02/07/2011
Date

Promulgated Under: 119.03
Statutory Authority: 3704.03(E)
Rule Amplifies: 3704.03(A), 3704.03(E)
Prior Effective Dates: 12/28/79, 12/21/00

3745-18-72 **Pike county emission limits.**

(A) No owner or operator of any coal-fired steam generating unit, unless otherwise specified in this rule, shall cause or permit the emission of sulfur dioxide from any source to exceed a maximum of 7.0 pounds of sulfur dioxide per MM Btu actual heat input.

(B) The "U.S. Enrichment Corporation" (OEPA premise number 0666000000) or any subsequent owner or operator of the "U.S. Enrichment Corporation," Piketon, Ohio shall not cause or permit the emission of sulfur dioxide from boiler numbers 1 through 3 (OEPA source numbers B001 through B003) to exceed a maximum of 6.16 pounds of sulfur dioxide per MM Btu actual heat input from each boiler.

Effective: 02/17/2011

R.C. 119.032 review dates: 11/30/2010 and 11/30/2015

CERTIFIED ELECTRONICALLY
Certification

02/07/2011
Date

Promulgated Under: 119.03
Statutory Authority: 3704.03(E)
Rule Amplifies: 3704.03(A), 3704.03(E)
Prior Effective Dates: 12/28/79, 5/11/87, 1/23/06

3745-18-73 **Portage county emission limits.**

No owner or operator of any coal-fired steam generating unit shall cause or permit the emission of sulfur dioxide from any source to exceed a maximum of 7.2 pounds of sulfur dioxide per MM Btu actual heat input.

Replaces: 3745-18-73

Effective: 02/17/2011

R.C. 119.032 review dates: 11/30/2015

CERTIFIED ELECTRONICALLY
Certification

02/07/2011
Date

Promulgated Under: 119.03
Statutory Authority: 3704.03(E)
Rule Amplifies: 3704.03(A), 3704.03(E)
Prior Effective Dates: 12/28/79

3745-18-74 **Preble county emission limits.**

No owner or operator of any coal-fired steam generating unit shall cause or permit the emission of sulfur dioxide from any source to exceed a maximum of 3.6 pounds of sulfur dioxide per MM Btu actual heat input.

Effective: 02/17/2011

R.C. 119.032 review dates: 11/30/2010 and 11/30/2015

CERTIFIED ELECTRONICALLY
Certification

02/07/2011
Date

Promulgated Under: 119.03
Statutory Authority: 3704.03(E)
Rule Amplifies: 3704.03(A), 3704.03(E)
Prior Effective Dates: 12/28/79

3745-18-75 **Putnam county emission limits.**

(A) No owner or operator of any coal-fired steam generating unit, unless otherwise specified in this rule, shall cause or permit the emission of sulfur dioxide from any source to exceed a maximum of 2.6 pounds of sulfur dioxide per MM Btu actual heat input.

(B) The "Buckeye Sugars, Incorporated" (OEPA premise number 0369000006) or any subsequent owner or operator of the "Buckeye Sugars, Incorporated" facility located in Tiffin, Ohio shall not cause or permit the emission of sulfur dioxide from boiler numbers 3, 1, and 2 (OEPA source numbers B001, B002, and B005) to exceed a maximum of 6.0 pounds of sulfur dioxide per MM Btu actual heat input from each boiler.

Effective: 02/17/2011

R.C. 119.032 review dates: 11/30/2010 and 11/30/2015

CERTIFIED ELECTRONICALLY
Certification

02/07/2011
Date

Promulgated Under: 119.03
Statutory Authority: 3704.03(E)
Rule Amplifies: 3704.03(A), 3704.03(E)
Prior Effective Dates: 12/28/79

3745-18-76 **Richland county emission limits.**

(A) No owner or operator of any coal-fired steam generating unit, unless otherwise specified in this rule, shall cause or permit the emission of sulfur dioxide from any source to exceed a maximum of 7.1 pounds of sulfur dioxide per MM Btu actual heat input.

(B) The "General Motors Corporation, Fisher Body Division, Mansfield Plant" (OEPA premise number 0370000140) or any subsequent owner or operator of the "General Motors Corporation, Fisher Body Division, Mansfield Plant" facility located at 2525 West Fourth street, Mansfield, Ohio shall not cause or permit the emission of sulfur dioxide from boiler numbers 1 through 3 (OEPA source numbers B001 through B003) to exceed a maximum of 3.1 pounds of sulfur dioxide per MM Btu actual heat input from each boiler.

(C) [Reserved]

(D) [Reserved]

(E) The "Mansfield Products Company" (OEPA premise numbers 0370010182) or any subsequent owner or operator of the "Mansfield Products Company" facility located at 246 East Fourth street, Mansfield, Ohio shall not cause or permit the emission of sulfur dioxide from boiler numbers 1 and 4 (OEPA source numbers B001 and B004) to exceed 6.0 pounds of sulfur dioxide per MM Btu actual heat input from each boiler and shall operate said boilers such that their combined average operating rate shall not exceed one hundred ninety-seven MM Btu per hour for any calendar day.

(F) [Reserved]

(G) The "City of Shelby Municipal Light Plant" (OEPA premise number 0370020002) or any subsequent owner or operator of the "City of Shelby Municipal Light Plant" facility located at 34 Mansfield avenue, Shelby, Ohio shall not cause or permit the emission of sulfur dioxide from the following sources to exceed the amounts indicated:

(1) Boiler numbers 1, 2, and 4 (OEPA source numbers B006, B007, and B008); a maximum of 8.1 pounds of sulfur dioxide per MM Btu actual heat input from each boiler.

(2) Boiler number 3 (OEPA source number B003); a maximum of 0.0 pounds of sulfur dioxide per MM Btu actual heat input.

Effective: 02/17/2011

R.C. 119.032 review dates: 11/30/2010 and 11/30/2015

CERTIFIED ELECTRONICALLY
Certification

02/07/2011
Date

Promulgated Under: 119.03
Statutory Authority: 3704.03(E)
Rule Amplifies: 3704.03(A), 3704.03(E)
Prior Effective Dates: 12/28/79, 1/23/06

3745-18-77 **Ross county emission limits.**

(A) No owner or operator of any coal-fired steam generating unit, unless otherwise specified in this rule, shall cause or permit the emission of sulfur dioxide from any source to exceed a maximum of 3.6 pounds of sulfur dioxide per MM Btu actual heat input.

(B) The "Chillicothe Paper Inc." (OEPA premise number 0671010028) or any subsequent owner or operator of the "Chillicothe Paper Inc." facility located on South Paint street, Chillicothe, Ohio shall not cause or permit the emission of sulfur dioxide from the following sources to exceed the amounts indicated:

(1) Boiler numbers 5, 7, and 8 (OEPA source numbers B001 through B003); a maximum of 9.9 pounds of sulfur dioxide per MM Btu actual heat input from each boiler.

(2) Chilpaco package boiler (OEPA source number B010); a maximum of 0.5 pounds of sulfur dioxide per MM Btu actual heat input.

(3) Recovery furnaces (OEPA source numbers B004 and B005); a maximum of 4.9 pounds of sulfur dioxide per ton of solids input.

(C) The "Chillicothe Correctional Institute" (OEPA premise number 0671010104) or any subsequent owner or operator of the "Chillicothe Correctional Institute" facility located in Chillicothe, Ohio shall not cause or permit the emission of sulfur dioxide from boiler numbers 1 through 4 (OEPA source numbers B001 through B004) to exceed a maximum of 5.6 pounds of sulfur dioxide per MM Btu actual heat input from each boiler.

Effective: 02/17/2011

R.C. 119.032 review dates: 11/30/2010 and 11/30/2015

CERTIFIED ELECTRONICALLY
Certification

02/07/2011
Date

Promulgated Under: 119.03
Statutory Authority: 3704.03(E)
Rule Amplifies: 3704.03(A), 3704.03(E)
Prior Effective Dates: 12/28/79, 1/23/06

3745-18-78 **Sandusky county emission limits.**

(A) No owner or operator of any coal-fired steam generating unit, unless otherwise specified below, shall cause or permit the emission of sulfur dioxide from any source to exceed a maximum of 2.6 pounds of sulfur dioxide per MM Btu actual heat input.

(B) The "Carmeuse Lime, Inc." (OEPA premise number 0372000081) or any subsequent owner or operator of the "Carmeuse Lime, Inc., 3964 County Road Number 41, Millersville, Ohio" shall not cause or permit the emission of sulfur dioxide from the following sources to exceed the amounts indicated:

(1) Rotary kiln number 2160 (OEPA source number P005); a maximum of 25.0 pounds of sulfur dioxide per ton of product.

(2) Rotary kiln number 2166 (OEPA source number P006); a maximum of 25.0 pounds of sulfur dioxide per ton of product.

(C) The "Carmeuse Lime, Inc." (OEPA premise number 0372000104) or any subsequent owner or operator of the "Carmeuse Lime, Inc., 659 Anderson Road, Woodville, Ohio" shall not cause or permit the emission of sulfur dioxide from the following sources to exceed the amounts indicated:

(1) Rotary lime kiln (OEPA source number P012); a maximum of 25.0 pounds of sulfur dioxide per ton of product.

(2) Number 1 rotary kiln (OEPA source number P015); a maximum of 25.0 pounds of sulfur dioxide per ton of product.

(3) Number 2 rotary kiln (OEPA source number P016); a maximum of 25.0 pounds of sulfur dioxide per ton of product.

(4) Number 3 rotary kiln (OEPA source number P017); a maximum of 25.0 pounds of sulfur dioxide per ton of product.

(5) Number 4 rotary kiln (OEPA source number P018); a maximum of 25.0 pounds of sulfur dioxide per ton of product.

(D) "Pfizer, Incorporated" (OEPA premise number 0372000109); or any subsequent owner or operator of "Pfizer, Incorporated, Cedar Street, Gibsonburg, Ohio" shall not cause or permit the emission of sulfur dioxide from the following sources to exceed the amounts indicated:

(1) Number 6 rotary kiln (OEPA source number P009); a maximum of 25.0 pounds of sulfur dioxide per ton of product.

(2) Number 7 rotary kiln (OEPA source number P010); a maximum of 25.0 pounds of sulfur dioxide per ton of product.

(3) Number 5 rotary kiln (OEPA source number P008); a maximum of 25.0 pounds of sulfur dioxide per ton of product.

(E) "Martin Marietta Magnesia Specialties, Inc." (OEPA premise number 0372000127) or any subsequent owner or operator of "Martin Marietta Magnesia Specialties, Inc., 755 Lime Road, Woodville, Ohio" shall not cause or permit the emission of sulfur dioxide from the following sources to exceed the amounts indicated:

(1) Rotary lime kilns numbers 5 and 4 (OEPA source numbers P010 and P013); a maximum of twenty-five pounds of sulfur dioxide per ton of product.

(2) Number 6 rotary refractory kiln (OEPA source number P014); a maximum of twenty-five pounds of sulfur dioxide per ton of product.

(3) Rotary lime kiln numbers 1 and 2 (OEPA source numbers P015 and P019); a maximum of 25.0 pounds of sulfur dioxide per ton of product.

(F) The "Michigan Sugar Company" (OEPA premise number 0372030103) or any subsequent owner or operator of the "Michigan Sugar Company, 1101 North Front Street, Fremont, Ohio" shall not cause or permit the emission of sulfur dioxide from the following sources to exceed the amounts indicated:

(1) Boiler number 3 (OEPA source number B004); a maximum of 0.5 pounds of sulfur dioxide per MM Btu actual heat input.

(2) Main boiler numbers 1 and 2 (OEPA source numbers B005 and B006); a maximum of 5.9 pounds of sulfur dioxide per MM Btu actual heat input from each boiler.

R.C. 119.032 review dates: 11/30/2010 and 11/30/2015

CERTIFIED ELECTRONICALLY
Certification

11/30/2010
Date

Promulgated Under: 119.03
Statutory Authority: 3704.03(E)
Rule Amplifies: 3704.03(A), 3704.03(E)
Prior Effective Dates: 12/28/79, 5/11/87, 1/23/06

3745-18-79 **Scioto county emission limits.**

(A) No owner or operator of any coal-fired steam generating unit, unless otherwise specified in this rule, shall cause or permit the emission of sulfur dioxide from any source to exceed a maximum of 6.9 pounds of sulfur dioxide per MM Btu actual heat input.

(B) "Sunoco, Inc." (OEPA premise number 0773000080) or any subsequent owner or operator of the "Sunoco, Inc." facility located on Ohio Furnace road, Haverhill, Ohio shall not cause or permit the emission of sulfur dioxide from the following sources to exceed the amounts indicated:

(1) Boiler numbers H-101 and H-102 (OEPA source numbers B001 and B002); a maximum of 6.9 pounds of sulfur dioxide per MM Btu actual heat input from each boiler.

(2) Boiler numbers 2001-UA and 2001-UB (OEPA source numbers B004 and B005); a maximum of 0.6 pounds of sulfur dioxide per MM Btu actual heat input from each boiler.

Replaces: 3745-18-79

Effective: 02/17/2011

R.C. 119.032 review dates: 11/30/2015

CERTIFIED ELECTRONICALLY
Certification

02/07/2011
Date

Promulgated Under: 119.03
Statutory Authority: 3704.03(E)
Rule Amplifies: 3704.03(A), 3704.03(E)
Prior Effective Dates: 12/28/79, 8/24/81, 1/23/06

3745-18-80 **Seneca county emission limits.**

(A) No owner or operator of any coal-fired steam generating unit, unless otherwise specified below, shall cause or permit the emission of sulfur dioxide from any source to exceed a maximum of 8.1 pounds of sulfur dioxide per MM Btu actual heat input.

(B) The "Carmeuse Ohio, Inc." (OEPA premise number 0374000010) or any subsequent owner or operator of the "Carmeuse Ohio, Inc." facility located in Bettsville, Ohio shall not cause or permit the emission of sulfur dioxide from rotary kiln numbers 10, 11, 12 and 13 (OEPA source number P004) to exceed a maximum of 34.0 pounds of sulfur dioxide per ton of actual process weight input.

(C) The "Chrysler Corporation, Fostoria Foundry" (OEPA premise number 0374010033) or any subsequent owner or operator of the "Chrysler Corporation, Fostoria Foundry" facility located in Fostoria, Ohio shall not cause or permit the emission of sulfur dioxide from the north and south cupolas (OEPA source number P029) to exceed a maximum of 0.4 pounds of sulfur dioxide per ton of metal melted.

(D) The "National Electrical Carbon" (OEPA premise number 0374010109) or any subsequent owner or operator of the "National Electric Carbon" facility located at Town street, Fostoria, Ohio shall not cause or permit the emissions of sulfur dioxide to exceed:

(1) A combined total of six hundred thirty-two pounds of sulfur dioxide from the large Herreshoff (OEPA source number P050) and small Herreshoff (OEPA source number P058) per ton of actual process weight input during simultaneous operations when the small Herreshoff is being used for calcining and the large Herreshoff for activation; and

(2) An individual total of seven hundred twenty pounds of sulfur dioxide from the large Herreshoff (OEPA source number P050) per ton of actual process weight input when the large Herreshoff is performing both calcining and activation.

(E) The "Honeywell International, Inc." (OEPA premise number 0374010117) or any subsequent owner or operator of the "Honeywell International, Inc." facility located in Fostoria, Ohio shall not cause or permit the emissions of sulfur dioxide from the following sources to exceed the amounts indicated:

(1) Boiler numbers 3 and 4 (OEPA source numbers B003 and B009) a maximum of 8.2 pounds of sulfur dioxide per MM Btu actual heat input from each boiler.

(2) Arkos air make-up unit (OEPA source number B004); a maximum of 8.2 pounds of sulfur dioxide per MM Btu actual heat input.

(F) The "National Machinery Company" (OEPA premise number 0374020062) or any subsequent owner or operator of the "National Machinery Company" facility located in Tiffin, Ohio shall not cause or permit the emission of sulfur dioxide from boiler numbers 2 and 1 (OEPA source numbers B001 and B002) to exceed a maximum of 1.2 pounds of sulfur dioxide per MM Btu actual heat input from each boiler.

(G) The "Webster Manufacturing" (OEPA premise number 0374020111) or any subsequent owner or operator of the "Webster Manufacturing" facility located on Hall street, Tiffin, Ohio shall not cause or permit the emission of sulfur dioxide from the following sources to exceed the amounts indicated:

(1) Air furnace (OEPA source number P001); a maximum of 0.7 pounds of sulfur dioxide per MM Btu actual heat input.

(2) Annealing oven numbers 1 and 4 (OEPA source number P002); a maximum of 0.2 pounds of sulfur dioxide per MM Btu actual heat input from each boiler.

(3) Annealing oven numbers 2 and 3 (OEPA source number P003); a maximum of 0.9 pounds of sulfur dioxide per MM Btu actual heat input from each oven.

(H) The "Tiffin State Hospital" (OEPA premise number 0374020170) or any subsequent owner or operator of the "Tiffin State Hospital" facility located in Tiffin, Ohio shall not cause or permit the emission of sulfur dioxide from boiler numbers 1 through 3 (OEPA source numbers B001 through B003) to exceed a maximum of 8.2 pounds of sulfur dioxide from MM Btu actual heat input from each boiler.

R.C. 119.032 review dates: 11/30/2010 and 11/30/2015

CERTIFIED ELECTRONICALLY
Certification

11/30/2010
Date

Promulgated Under: 119.03
Statutory Authority: 3704.03(E)
Rule Amplifies: 3704.03(A), 3704.03(E)
Prior Effective Dates: 12/28/79, 8/24/81, 1/23/06

3745-18-81 **Shelby county emission limits.**

No owner or operator of any coal-fired steam generating unit shall cause or permit the emission of sulfur dioxide from any source to exceed a maximum of 3.6 pounds of sulfur dioxide per MM Btu actual heat input.

Effective: 02/17/2011

R.C. 119.032 review dates: 11/30/2010 and 11/30/2015

CERTIFIED ELECTRONICALLY
Certification

02/07/2011
Date

Promulgated Under: 119.03
Statutory Authority: 3704.03(E)
Rule Amplifies: 3704.03(A), 3704.03(E)
Prior Effective Dates: 12/28/79, 1/23/06

3745-18-82 **Stark county emission limits.**

(A) No owner or operator of the following types of facilities, unless otherwise specified in this rule, shall cause or permit the emission of sulfur dioxide from any stack in excess of the rates specified below:

(1) For fossil fuel-fired steam generating units between ten and sixty MM Btu per hour total rated heat input capacity, the emission rate in pounds of sulfur dioxide per MM Btu actual heat input shall be calculated by the following equation:

$$EL = 18.48Qm^{-0.4886}$$

where:

Qm is the total rated capacity of heat input in MM Btu per hour, and

EL is the allowable emission rate in pounds of sulfur dioxide per MM Btu actual heat input.

(2) For fossil fuel-fired steam generating units equal to or greater than sixty MM Btu per hour total rated heat input capacity, 2.50 pounds of sulfur dioxide per MM Btu actual heat input.

(3) No owner or operator of any process equipment shall cause or permit the emission of sulfur dioxide from any stack in excess of 80.0 pounds of sulfur dioxide per ton of actual process weight input.

(B) The "Canton Drop Forging and Manufacturing Company" (OEPA premise number 1576000073) or any subsequent owner or operator of the "Canton Drop Forging and Manufacturing Company" facility located at 4575 Southway Street Southwest, Canton, Ohio shall not cause or permit the emission of sulfur dioxide from the following sources to exceed the amounts indicated and the units shall not exceed the operating limits indicated:

(1) Boiler number 1 (OEPA source number B001); a maximum of 2.5 pounds of sulfur dioxide per MM Btu actual heat input and a maximum heat input rate of 86.0 MM Btu per hour as a three-hour average and 62.5 MM Btu per hour as a twenty-four-hour average.

(2) The stack height for B001 shall be a minimum of 147.5 feet.

(3) For boiler numbers 2 and 3 (OEPA source numbers B002 and B003); a maximum of 2.5 pounds of sulfur dioxide per MM Btu actual heat input from each boiler.

(4) The total fuel oil consumption by all forge-shop furnaces shall not exceed seven hundred seventy-five gallons per hour, eighteen thousand six hundred gallons per day and six million seven hundred eighty-nine thousand gallons per year. [Forge-shop furnaces include emissions units P001 through P010, P016, P017, P019 through P021, P038, P039, P041 and P046.]

(5) The sulfur content for any fuel oil used in the forge-shop furnaces shall not exceed 0.05 per cent by weight.

(C) [Reserved]

(D) [Reserved]

(E) The "Marathon Ashland Petroleum, LLC" (OEPA premise number 1576000301) or any subsequent owner or operator of the "Marathon Ashland Petroleum, LLC" facility located at 2408 Gambrinus Road, Canton, Ohio shall not cause or permit the emission of sulfur dioxide from the following sources to exceed the amounts indicated and shall operate said sources in the manner specified:

(1)

--

Guard case heater 4-2-B-1	(OEPA source number B016), and
ISO stripper heater 4-27-B-1	(OEPA source number B021);

A maximum of 0.025 pounds of sulfur dioxide per MM Btu actual heat input from each unit.

(2) A maximum 1.0 pounds of sulfur dioxide per MM Btu actual heat input for all process heaters and fossil fuel-fired steam-generating units unless otherwise specified in this paragraph.

(3) Number 1 boiler 4-16-B-1, number 2 boiler 4-16-B-2, and number 12 boiler 4-16-B-12 (OEPA source number B024, B025, and B027); only two of the three boilers may be operated simultaneously.

(4) [Reserved]

(5) FCC (OEPA source number P002); a maximum of 0.62 pounds of sulfur dioxide per one thousand pounds of fresh feed.

(F) The "Greif Packaging, LLC" (OEPA premise number 1576000431) or any subsequent owner or operator of the "Greif Brothers Corporation" facility located at 787 Warmington Rd. SW, Massillon, Ohio shall not cause or permit the emission of

sulfur dioxide from any stack at this facility in excess of 0.50 pound of sulfur dioxide per MM Btu actual heat input.

(G) [Reserved]

(H) [Reserved]

(I) The "Timken Company, Canton Plant Number 5" (OEPA premise number 1576050614) or any subsequent owner or operator of the "Timken Company, Canton Plant Number 5" facility located at 1835 Dueber Avenue, Southwest, Canton, Ohio shall not cause or permit the emission of sulfur dioxide from the following sources to exceed the amount indicated: :

(1) 3.08 pounds of sulfur dioxide per MM Btu actual heat input for the stack common to boiler numbers 1 CBF-A and 2 CBF-B (OEPA source numbers B001 and B002); and

(2) 0.93 pounds of sulfur dioxide per MM Btu actual heat input for boiler 3 CBF-G (OEPA source number B003).

(J) The "RESCO Products, Inc." (OEPA premise number 1576000771) or any subsequent owner or operator of the "RESCO Products, Inc." facility located at 6878 Osnaburg Road, East Canton, Ohio shall not cause or permit the emission of sulfur dioxide from kiln numbers 5, 7, 8, 9, 10, 11, 12, and 15 (OEPA source numbers P029 through P036) to exceed a maximum of one hundred twenty-nine pounds of sulfur dioxide per ton of product.

(K) [Reserved]

(L) [Reserved]

(M) [Reserved]

(N) The "Babcock and Wilcox Company, Alliance Research Center" (OEPA premise number 1576010601) or any subsequent owner or operator of the "Babcock and Wilcox Company, Alliance Research Center" facility located at 1562 Beeson Street Northeast, Alliance, Ohio shall not cause or permit the emission of sulfur dioxide from boiler H1 (OEPA source number B006) to exceed a maximum of 2.1 pounds of sulfur dioxide per MM Btu actual heat input from each boiler and shall operate said boilers such that the following combined average operating rates are not exceeded for any calendar day: first quarter, one hundred nine MM Btu per hour; second quarter, fifty-three MM Btu per hour; third quarter, ten MM Btu per hour; fourth quarter, fifty-three MM Btu per hour.

(O) The "Timken Company" (OEPA premise number 1576000613) or any subsequent owner or operator of the "Timken Company" facility located on Gambrinus Avenue,

Canton, Ohio shall not cause or permit the emission of sulfur dioxide from the following sources to exceed the amount indicated:

(1) [Reserved]

(2) 0.67 pounds of sulfur dioxide per MM Btu actual heat input for fossil fuel-fired steam-generating units unless otherwise specified in paragraph (O)(1) of this rule.

(P) [Reserved]

(Q) [Reserved]

(R) [Reserved]

(S) [Reserved]

(T) The "Republic Engineered Products LLC - Massillon CFB" (OEPA premise number 1576130697) or any subsequent owner or operator of the "Republic Engineered Products LLC - Massillon CFB" facility located at 401 Rose Avenue, Southeast, Massillon, Ohio shall not cause or permit the emission of sulfur dioxide from any fossil-fuel fired steam generating unit stack in excess of 4.40 pounds of sulfur dioxide per MM Btu actual heat input.

(U) The "Maple Street Commerce" (OEPA premise number 1576170258) or any subsequent owner or operator or the "Maple Street Commerce" facility located at 101 East Maple Street, North Canton, Ohio shall not cause or permit the emission of sulfur dioxide in excess of 8.0 pounds per MM Btu actual heat input for the coal-fired boiler and 0.4 pounds per MM Btu actual heat input for the gas-fired boiler.

Effective: 04/03/2011

R.C. 119.032 review dates: 11/30/2010 and 11/30/2015

CERTIFIED ELECTRONICALLY
Certification

03/24/2011
Date

Promulgated Under: 119.03
Statutory Authority: 3704.03(E)
Rule Amplifies: 3704.03(A), 3704.03(E)
Prior Effective Dates: 12/28/79, 1/23/06, 12/8/07

3745-18-83 **Summit county emission limits.**

(A) No owner or operator of any applicable unit, unless otherwise specified in this rule, shall cause or permit the emission of sulfur dioxide from any stack in excess of the rate indicated in the following:

(1) For fossil fuel fired steam generating units with a total rated heat input capacity between ten and three hundred MM Btu per hour, the emission rate in pounds of sulfur dioxide per MM Btu actual heat input shall be calculated in accordance with the following equation:

$$EL = 17.55\ Qm^{-0.3933}$$

where:

Qm is the total rated heat input capacity in MM Btu per hour, and

EL is the allowable emission rate in pounds of sulfur dioxide per MM Btu actual heat input.

(2) For fossil fuel-fired steam generating units with a total heat input capacity equal to or greater than three hundred MM Btu per hour, 1.80 pounds of sulfur dioxide per MM Btu actual heat input.

(3) Process equipment, unless otherwise specified in this rule, shall not cause or permit the emission of sulfur dioxide from any stack in excess of 17.0 pounds of sulfur dioxide per ton of actual process weight input.

(B) The "Terex Division, General Motors Corporation" (OEPA premise number 1677000044) or any subsequent owner or operator of the "Terex Division, General Motors Corporation, State Route Number 91, Hudson, Ohio" shall not cause or permit the emission of sulfur dioxide from any stack at this facility in excess of 0.85 pounds of sulfur dioxide per MM Btu actual heat input.

(C) [Reserved]

(D) [Reserved]

(E) [Reserved]

(F) [Reserved]

(G) The "Cargill, Incorporated - Salt Division" (OEPA premise number 1677010027) or any subsequent owner or operator of the "Cargill, Incorporated - Salt Division, 2065 Manchester Road, Akron, Ohio" shall not cause or permit the emission of sulfur

dioxide from coal-fired boilers at this facility in excess of 4.72 pounds of sulfur dioxide per MM Btu of actual heat input or the emission of sulfur dioxide from oil-fired boilers at this facility in excess of 0.30 pound of sulfur dioxide per MM Btu of actual heat input.

(H) The "Novean, Inc." (OEPA premise number 1677010029) or any subsequent owner or operator of the "Novean, Inc., West Emerling Avenue, Akron, Ohio" shall not cause or permit the emission of sulfur dioxide from any stack at this facility in excess of 5.22 pounds of sulfur dioxide per MM Btu actual heat input.

(I) The "B.F. Goodrich Company" (OEPA premise number 1677010051) or any subsequent owner or operator of the "B.F. Goodrich Company, 500 South Main Street, Akron, Ohio" shall not cause or permit the emission of sulfur dioxide from any stack at the facility in excess of the rates specified as followed:

(1) 0.51 pound of sulfur dioxide per MM Btu actual heat input for oil-fired boiler 31 (OEPA source number B002);

(2) 7.0 pounds of sulfur dioxide per MM Btu actual heat input for coal-fired Boilers 27 and 32 (OEPA source numbers B001 and B003); and

(3) Boiler 27 shall not be operated simultaneously with boiler 32.

(J) The "Lockheed Martin Tactical Systems" (OEPA premise number 1677010107) or any subsequent owner or operator of the "Lockheed Martin Tactical Systems, 1210 Massillon Road, Akron, Ohio" shall not cause or permit the emission of sulfur dioxide from the AB powerhouse numbers 1 through 4 (OEPA source numbers B001 through B004) in excess of 1.10 pounds of sulfur dioxide per MM Btu of actual heat input and plant D numbers 1 through 3 (OEPA source numbers B005 through B007) in excess of 1.83 pounds of sulfur dioxide per MM Btu of actual heat input.

(K) The "Firestone Tire and Rubber Company" (OEPA premise number 1677010129) or any subsequent owner or operator of the "Firestone Tire and Rubber Company, 1200 Firestone Parkway, Akron, Ohio" shall not cause or permit the emission of sulfur dioxide from any stack at this facility in excess of the rates specified as followed:

(1) 1.76 pounds of sulfur dioxide per MM Btu of actual heat input from boiler 21 (OEPA source number B001) when oil fired and 2.87 pounds of sulfur dioxide per MM Btu of actual heat input from boilers 22 and 23 (OEPA source numbers B002 and B003) when coal fired.

(2) In lieu of meeting the requirements of paragraph (K)(1) of this rule, the owner or operator may elect to comply with the alternate emission limitation of 2.20 pounds of sulfur dioxide per MM Btu of actual heat input from B001, B002 and B003 when all are oil fired.

(3) The owner or operator shall operate no more than two of the boilers, B001, B002 and B003, simultaneously whether complying with paragraph (K)(1) or (K)(2) of this rule.

(L) The "Goodyear Tire and Rubber Company, Plant II" (OEPA premise number 1677010192) or any subsequent owner or operator of the "Goodyear Tire and Rubber Company, Plant II, Martha Avenue, Akron, Ohio" shall not cause or permit the emission of sulfur dioxide from the following sources to exceed the amount indicated:

(1) 2.24 pounds of sulfur dioxide per MM Btu actual heat input for coal-fired boilers A and B (OEPA source numbers B001 and B002) exiting through stack 4;

(2) 2.24 pounds of sulfur dioxide per MM Btu actual heat input for coal-fired boiler C (OEPA source number B003) exiting through stack 5;

(3) 2.24 pounds of sulfur dioxide per MM Btu actual heat input for coal-fired boiler D (OEPA source number B004) exiting through stack 6.

(4) Sulfur recovery plant (OEPA source number P032); a maximum of 0.1 pounds of sulfur dioxide per pound of sulfur processed.

(5) In lieu of meeting the requirements of paragraphs (L)(1) to (L)(3) of this rule, the owner or operator may elect to comply with the alternate emission limitations and operating conditions specified in this paragraph, provided the "General Tire and Rubber Company" (OEPA premise number 1677010375) or any subsequent owner or operator of the "General Tire and Rubber Company" complies with paragraph (O)(4) of this rule:

(a) Sulfur dioxide emissions shall not exceed the rates specified as followed:

(i) 4.64 pounds of sulfur dioxide per MM Btu actual heat input for coal-fired boilers A, B, and C exiting through stack 4;

(ii) 4.64 pounds of sulfur dioxide per MM Btu actual heat input for coal-fired boiler D exiting through stack 6;

(b) The owner or operator shall operate no more than three of the boilers A, B, C, or D simultaneously;

(c) The owner or operator shall not operate boiler D simultaneously with boilers A and B.

(M) The "Goodyear Tire and Rubber Company, Plant I Powerhouse" (OEPA premise number 1677010193) or any subsequent owner or operator of the "Goodyear Tire and Rubber Company, Plant I Powerhouse, 1144 East Market Avenue, Akron, Ohio"

shall not cause or permit the emission of sulfur dioxide from the following sources to exceed the amount indicated:

(1) Boiler number 1 (OEPA source number B001): a maximum of 4.47 pounds of sulfur dioxide per MM Btu actual heat input;

(2) Boiler numbers 2 and 3 (OEPA source numbers B002 and B003); a maximum of 0.50 pounds of sulfur dioxide per MM Btu actual heat input from each boiler.

(N) [Reserved]

(O) [Reserved]

(P) [Reserved]

(Q) [Reserved]

(R) [Reserved]

(S) The "PPG Industries, Incorporated" (OEPA premise number 1677020009) or any subsequent owner or operator of the "PPG Industries, Incorporated, 95 Columbia Court, Barberton, Ohio" shall not cause or permit the emission of sulfur dioxide from boiler numbers 3 and 6 through 12 (OEPA source numbers B001 through B008) to exceed a maximum of 0.0 pounds of sulfur dioxide per MM Btu actual heat input from each boiler.

(T) The "3M Company" (OEPA premise number 1677040002) or any subsequent owner or operator of the "3M Company, 3154 Copley Road, Copley, Ohio" shall not cause or permit the emission of sulfur dioxide from the following sources to exceed the amounts indicated:

(1) Sulfuric acid plant number 1 (OEPA source number P003); a maximum of 40.0 pounds of sulfur dioxide per ton of one hundred per cent acid produced.

(2) Sulfuric acid plant number 2 (OEPA source number P004); a maximum of 6.5 pounds of sulfur dioxide per ton of one hundred per cent acid produced.

(U) The "Sonoco Products Company" (OEPA premise number 1677090000) or any subsequent owner or operator of the "Sonoco Products Company, 59 North Main Street, Munroe Falls, Ohio" shall not cause or permit the emission of sulfur dioxide from boiler number 3 (OEPA source number B003) to exceed a maximum of 1.6 pounds of sulfur dioxide per MM Btu actual heat input and shall operate said boiler such that the average operating rate shall not exceed thirty-nine MM Btu per hour for any calendar day.

(V) The "Daimler Chrysler facility" (OEPA premise number 1677130006) or any subsequent owner or operator of the "Daimler Chrysler facility, State Route 82, Twinsburg, Ohio" shall not cause or permit the emission of sulfur dioxide from any stack at this facility in excess of the rates specified as followed:

(1) 0.86 pound of sulfur dioxide per MM Btu actual heat input for boiler number B001.

(2) 1.19 pounds of sulfur dioxide per MM Btu actual heat input for boiler numbers B002 and B003.

Effective: 02/17/2011

R.C. 119.032 review dates: 11/30/2010 and 11/30/2015

CERTIFIED ELECTRONICALLY
Certification

02/07/2011
Date

Promulgated Under: 119.03
Statutory Authority: 3704.03(E)
Rule Amplifies: 3704.03(A), 3704.03(E)
Prior Effective Dates: 12/28/79, 12/15/82, 5/11/87, 1/23/06

3745-18-84 **Trumbull county emission limits.**

(A) No owner or operator of any coal-fired steam generating unit, unless otherwise specified in this rule, shall cause or permit the emission of sulfur dioxide from any source to exceed a maximum of 5.4 pounds of sulfur dioxide per MM Btu actual heat input.

(B) The "Denman Tire Corporation" (OEPA premise number 0278000013) or any subsequent owner or operator of the "Denman Tire Corporation" facility located on Diehl South road, Warren, Ohio shall not cause or permit the emission of sulfur dioxide from boiler numbers 1 and 2 (OEPA source numbers B001 and B002) to exceed a maximum of 5.0 pounds of sulfur dioxide per MM Btu actual heat input from each boiler and shall operate said boilers such that the combined average operating rate shall not exceed twenty-six MM Btu per hour for any calendar day.

(C) [Reserved]

(D) The "Ohio Edison Company, Niles Plant" (OEPA premise number 0278060023) or any subsequent owner or operator of the Ohio Edison Company, Niles Plant" facility located at 1047 Belmont avenue, Niles, Ohio shall not cause or permit the emission of sulfur dioxide from the following sources to exceed the amounts indicated:

(1) Boiler numbers 1 and 2 (OEPA source numbers B001 and B002); a maximum of 5.7 pounds of sulfur dioxide per MM Btu actual heat input from each boiler.

(2) Turbine A (OEPA source number B004); a maximum of 0.5 pounds of sulfur dioxide per MM Btu actual heat input.

(E) The "Copperweld Specialty Steel Company" (OEPA premise number 0278080015) or any subsequent owner or operator of the "Copperweld Specialty Steel Company" facility located at 4000 Mahoning avenue, Warren, Ohio shall not cause or permit the emission of sulfur dioxide from boiler numbers 1 and 2 (OEPA source numbers B001 and B002) to exceed a maximum of 4.2 pounds of sulfur dioxide per MM Btu actual heat input from each boiler.

(F) The "Thomas Steel-Strip Corporation" (OEPA premise number 0278080019) or any subsequent owner or operator of the "Thomas Steel-Strip Corporation" facility located on Delaware avenue, Northwest, Warren, Ohio shall not cause or permit the emission of sulfur dioxide from the following sources to exceed the amounts indicated:

(1) Boiler numbers 3 and 4 (OEPA source numbers B002 and B003); a maximum of 2.6 pounds of sulfur dioxide per MM Btu actual heat input from each boiler.

(2) Boiler numbers 5 (OEPA source number B013); a maximum of 1.2 pounds of sulfur dioxide per MM Btu actual heat input.

(G) The "Delphi Packard Electric Systems" (OEPA premise number 0278080051) or any subsequent owner or operator of the "Delphi Packard Electric Systems" facility located on North River road, Warren, Ohio shall not cause or permit the emission of sulfur dioxide from the following sources to exceed the amounts indicated:

(1) Boiler numbers 1 and 2 (OEPA source number B001 and B002); a maximum of 1.1 pounds of sulfur dioxide per MM Btu actual heat input from each boiler.

(2) Boiler number 3 (OEPA source number B003); a maximum of 3.0 pounds of sulfur dioxide per MM Btu actual heat input.

(H) The "Delphi Automotive Systems" (OEPA premise number 0278080052) or any subsequent owner or operator of the "Delphi Automotive Systems" facility located on Dana street, Northeast, Warren, Ohio shall not cause or permit the emission of sulfur dioxide from the following sources to exceed the amounts indicated:

(1) Boiler number 1 (OEPA source number B001); a maximum of 3.0 pounds of sulfur dioxide per MM Btu actual heat input.

(2) Boiler numbers 2 and 3 (OEPA source numbers B002 and B004); a maximum of 1.1 pounds of sulfur dioxide per MM Btu actual heat input from each boiler.

(I) The "Republic Steel Corporation" (OEPA premise number 0278080235) or any subsequent owner or operator of the "Republic Steel Corporation" facility located at 1040 Pine street, Warren Township, Ohio shall not cause or permit the emission of sulfur dioxide from the 56" hot mill furnaces (OEPA source number P001) to exceed a maximum of 1.7 pounds of sulfur dioxide per MM Btu actual heat input.

(J) The "Republic Steel Corporation" (OEPA premise number 0278080337) or any subsequent owner or operator of the "Republic Steel Corporation" facility located on Main street, Warren, Ohio shall not cause or permit the emission of sulfur dioxide from the following sources to exceed the amounts indicated:

(1) Boiler number 1 (OEPA source number B001); a maximum of 3.9 pounds of sulfur dioxide per MM Btu actual heat input.

(2) Boiler number 2 (OEPA source number B002); a maximum of 1.6 pounds of sulfur dioxide per MM Btu actual heat input.

(3) Sinter plant (OEPA source number P002); a maximum of 1.7 pounds of sulfur dioxide per MM Btu actual heat input.

(4) Coke battery numbers 1 and 2 (OEPA source numbers P003 and P004); from the combustion of coke oven gas containing hydrogen sulfide, three hundred twenty-five grains of hydrogen sulfide per one hundred dry standard cubic feet of coke oven gas.

(K) The "Republic Steel Corporation" (OEPA premise number 0278080338) or any subsequent owner or operator of the "Republic Steel Corporation" facility located on Pine street extension, Warren, Ohio shall not cause or permit the emission of sulfur dioxide from the soaking pits, rows 1 through 10 (OEPA source numbers P002 through P004) to exceed a maximum of 1.7 pounds of sulfur dioxide per MM Btu actual heat input.

Effective: 02/17/2011

R.C. 119.032 review dates: 11/30/2010 and 11/30/2015

CERTIFIED ELECTRONICALLY
Certification

02/07/2011
Date

Promulgated Under: 119.03
Statutory Authority: 3704.03(E)
Rule Amplifies: 3704.03(A), 3704.03(E)
Prior Effective Dates: 12/28/79, 1/23/06

3745-18-85 **Tuscarawas county emission limits.**

(A) No owner or operator of any coal-fired steam generating unit, unless otherwise specified in this rule, shall cause or permit the emission of sulfur dioxide from any source to exceed a maximum of 4.5 pounds of sulfur dioxide per MM Btu actual heat input.

(B) The "Fairfield Brick Company" (OEPA premise number 0679000014) or any subsequent owner or operator of the "Fairfield Brick Company" facility located in Zoarville, Ohio shall not cause or permit the emission of sulfur dioxide from the coal-fired periodic brick kilns (OEPA source numbers P004, P003, P009, P010) to exceed a maximum of 42.0 pounds of sulfur dioxide per ton of brick produced.

(C) The "Arizona Chemical Company" (OEPA premise number 0679010013) or any subsequent owner or operator of the "Arizona Chemical Company" facility located at 875 Harger street, Dover, Ohio shall not cause or permit the emission of sulfur dioxide from boiler numbers 9 and 11 (OEPA source numbers B010 and B011) to exceed a maximum of 7.9 pounds of sulfur dioxide per MM Btu actual heat input from each boiler.

(D) [Reserved]

(E) The "Dover Municipal Power Plant" (OEPA premise number 0679010146) or any subsequent owner or operator of the "Dover Municpal Power Plant" facility located at 303 East Broadway, Dover, Ohio shall not cause or permit the emission of sulfur dioxide from boiler numbers 1 through 4 (OEPA source numbers B001 through B004) to exceed a maximum of 4.6 pounds of sulfur dioxide per MM Btu actual heat input from each boiler.

(F) The "Superior Clay Corporation" (OEPA premise number 0679030002) or any subsequent owner or operator of the "Superior Clay Corporation" facility located on Newport road, Uhrichsville, Ohio shall not cause or permit the emission of sulfur dioxide from boiler numbers 1 through 3 (OEPA source numbers B001 through B003) to exceed a maximum of 5.2 pounds of sulfur dioxide per MM Btu actual heat input from each boiler.

(G) The "United States Concrete Pipe Company" (OEPA premise number 0679030015) or any subsequent owner or operator of the "United States Concrete Pipe company" facility located on route 36, Uhrichsville, Ohio shall not cause or permit the emission of sulfur dioxide from boiler numbers 1 and 2 (OEPA source numbers B001 and B002) to exceed a maximum of 4.5 pounds of sulfur dioxide per MM Btu actual heat input from each boiler.

(H) [Reserved]

(I) The "Puritan Laundry and Dry Cleaning Company" (OEPA) premise number 0679020168) or any subsequent owner or operator of the "Puritan Laundry and Dry Cleaning Company" facility located at 243 Sixth street, southwest, New Philadelphia, Ohio shall not cause or permit the emission of sulfur dioxide from the coal-fired boiler (OEPA source number B001) to exceed a maximum of 6.17 pounds of sulfur dioxide per MM Btu actual heat input.

Effective: 02/17/2011

R.C. 119.032 review dates: 11/30/2010 and 11/30/2015

CERTIFIED ELECTRONICALLY
Certification

02/07/2011
Date

Promulgated Under: 119.03
Statutory Authority: 3704.03(E)
Rule Amplifies: 3704.03(A), 3704.03(E)
Prior Effective Dates: 12/28/79, 1/23/06

3745-18-86 **Union county emission limits.**

(A) No owner or operator of any coal-fired steam generating unit, unless otherwise specified in this rule, shall cause or permit the emission of sulfur dioxide from any source to exceed a maximum of 3.6 pounds of sulfur dioxide per MM Btu actual heat input.

(B) The "Ohio Reformatory for Women" (OEPA premise number 0180010017) or any subsequent owner or operator of the "Ohio Reformatory for Women" facility located at 1479 Collins avenue, Marysville, Ohio shall not cause or permit the emission of sulfur dioxide from boiler numbers 1, 3, and 4 (OEPA source numbers B001 through B003) to exceed a maximum of 6.1 pounds of sulfur dioxide per MM Btu actual heat input from each boiler.

Effective: 02/17/2011

R.C. 119.032 review dates: 11/30/2010 and 11/30/2015

CERTIFIED ELECTRONICALLY
Certification

02/07/2011
Date

Promulgated Under: 119.03
Statutory Authority: 3704.03(E)
Rule Amplifies: 3704.03(A), 3704.03(E)
Prior Effective Dates: 12/28/79

3745-18-87 **Van Wert county emission limits.**

(A) No owner or operator or any coal-fired steam generating unit, unless otherwise specified in this rule, shall cause or permit the emission of sulfur dioxide from any source to exceed a maximum of 2.6 pounds of sulfur dioxide per MM Btu actual heat input.

(B) The "Borden Foods, Division of Borden, Incorporated" (OEPA premise number 0381020103) or any subsequent owner or operator of the "Borden Foods, Division of Borden, Incorporated" facility located at 615 West Ervin road, Van Wert, Ohio shall not cause or permit the emission of sulfur dioxide from boiler numbers 1 and 2 (OEPA source number B001) to exceed a maximum of 2.6 pounds of sulfur dioxide per MM Btu actual heat input from each boiler.

(C) The "Bunge North America" (OEPA premise number 0381000011) or any subsequent owner or operator of the "Bunge North America" facility located at 234 South Jefferson, Delphos, Ohio shall not cause or permit the emission of sulfur dioxide from boiler number 1 (OEPA source number B001) to exceed a maximum of 6.7 pounds of sulfur dioxide per MM Btu actual heat input and shall operate said boiler such that the following average operating rates are not exceeded for any calendar day: first quarter, eighty-five MM Btu per hour; second quarter, eighty-five MM Btu per hour; third quarter, eighty-five MM Btu per hour; fourth quarter, eighty-five MM Btu per hour.

Effective: 02/17/2011

R.C. 119.032 review dates: 11/30/2010 and 11/30/2015

CERTIFIED ELECTRONICALLY
Certification

02/07/2011
Date

Promulgated Under: 119.03
Statutory Authority: 3704.03(E)
Rule Amplifies: 3704.03(A), 3704.03(E)
Prior Effective Dates: 12/28/79, 1/23/06

3745-18-88 **Vinton county emission limits.**

(A) No owner or operator of any coal-fired steam generating unit, unless otherwise specified in this rule, shall cause or permit the emission of sulfur dioxide from any source to exceed a maximum of 4.5 pounds of sulfur dioxide per MM Btu actual heat input.

(B) The "Austin Powder Company" (OEPA premise number 0682000000) or any subsequent owner or operator of the "Austin Powder Company" facility located on state route number 677, McArthur, Ohio shall not cause or permit the emission of sulfur dioxide from boiler numbers 4 and 5 (OEPA source numbers B001 and B002) to exceed a maximum of 8.4 pounds of sulfur dioxide per MM Btu actual heat input from each boiler.

Effective: 02/17/2011

R.C. 119.032 review dates: 11/30/2010 and 11/30/2015

CERTIFIED ELECTRONICALLY
Certification

02/07/2011
Date

Promulgated Under: 119.03
Statutory Authority: 3704.03(E)
Rule Amplifies: 3704.03(A), 3704.03(E)
Prior Effective Dates: 12/28/79

3745-18-89 **Warren county emission limits.**

(A) No owner or operator of any coal-fired steam generating unit, unless otherwise specified in this rule, shall cause or permit the emission of sulfur dioxide from any source to exceed a maximum of 3.6 pounds of sulfur dioxide per MM Btu actual heat input.

(B) The "Lebanon Correctional Institution" (OEPA premise number 1483060053) or any subsequent owner or operator of the "Lebanon Correctional Institution" facility located in Lebanon, Ohio shall not cause or permit the emission of sulfur dioxide from boiler numbers 1 and 2 (OEPA source numbers B001 and B002) to exceed a maximum of 5.6 pounds of sulfur dioxide per MM Btu actual heat input from each boiler.

Effective: 02/17/2011

R.C. 119.032 review dates: 11/30/2010 and 11/30/2015

CERTIFIED ELECTRONICALLY
Certification

02/07/2011
Date

Promulgated Under: 119.03
Statutory Authority: 3704.03(E)
Rule Amplifies: 3704.03(A), 3704.03(E)
Prior Effective Dates: 12/28/79

3745-18-90 **Washington county emission limits.**

(A) No owner or operator of any coal-fired steam generating unit, unless otherwise specified below, shall cause or permit the emission of sulfur dioxide from any source to exceed a maximum of 4.5 pounds of sulfur dioxide per MM Btu actual heat input.

(B) The "Ohio Power Company, Muskingum River Plant" (OEPA premise number 0684000000) or any subsequent owner or operator of the "Ohio Power Company, Muskingum River Plant" facility located in Beverly, Ohio shall not cause or permit the emission of sulfur dioxide from the following sources to exceed the amounts indicated:

(1) Boiler numbers 1 through 5 (OEPA source numbers B002 through B006); a maximum of 8.6 pounds of sulfur dioxide per MM Btu actual heat input from each boiler prior to July 1, 1989;

(2) Boiler numbers 1 through 5 (OEPA source numbers B002 through B006): a maximum of 7.6 pounds of sulfur dioxide per MM Btu actual heat input from each boiler on and after July 1, 1989;

(3) Unit 5 auxiliary boiler (OEPA source number B001); a maximum of 1.2 pounds of sulfur dioxide per MM Btu actual heat input.

(C) The "KRATON Polymers U.S. LLC" (OEPA premise number 0684010011) or any subsequent owner or operator of the "KRATON Polymers U.S. LLC" facility located at 2982 Washington boulevard, Belpre, Ohio shall not cause or permit the emission of sulfur dioxide from boiler numbers F-1001 and F-1002 (OEPA source numbers B005 and B007) to exceed 2.5 pounds of sulfur dioxide per MM Btu actual heat input from each boiler.

(D) The "American Municipal Power - Ohio, Incorporated, Richard H. Gorsuch Generating Station" (OEPA premise number 0684020037) or any subsequent owner or operator of the "American Municipal Power - Ohio, Incorporated, Richard H. Gorsuch Generating Station, Route 7, Marietta, Ohio" shall not cause or permit the emission of sulfur dioxide from boiler numbers 1 through 4 (OEPA source numbers B001 through B004) to exceed 4.5 pounds of sulfur dioxide per MM Btu actual heat input from each boiler.

Effective: 01/23/2006

R.C. 119.032 review dates: 10/28/2005 and 01/23/2011

CERTIFIED ELECTRONICALLY
Certification

01/13/2006
Date

Promulgated Under: 119.03
Statutory Authority: 3704.03(E)
Rule Amplifies: 3704.03(A) and 3704.03(E)
Prior Effective Dates: 12/28/79, 4/21/82, 11/1/82, 9/1/03

3745-18-91 **Wayne county emission limits.**

(A) No owner or operator of any coal-fired steam generating unit, unless otherwise specified in this rule, shall cause or permit the emission of sulfur dioxide from any source to exceed a maximum of 7.2 pounds of sulfur dioxide per MM Btu actual heat input.

(B) [Reserved]

(C) [Reserved]

(D) [Reserved]

(E) The "Orrville Municipal Utility" (OEPA premise number 0285010188) or any subsequent owner or operator of the "Orrville Municipal Utility" facility located at 1115 Perry street, Orrville, Ohio shall not cause or permit the emission of sulfur dioxide from boiler numbers 10 through 13 (OEPA source numbers B001 through B004) to exceed a maximum of 7.0 pounds of sulfur dioxide per MM Btu actual heat input from each boiler.

(F) The "Morton Salt Company, Division of Morton-Norwich Products, Incorporated" (OEPA premise number 0285020059) or any subsequent owner or operator of the "Morton Salt Company, Division of Morton-Norwich Products Incorporated," facility located at 151 South Industrial street, Rittman, Ohio shall not cause or permit the emission of sulfur dioxide from boiler numbers 1 and 2 (OEPA source numbers B001 and B003) to exceed a maximum of 7.0 pounds of sulfur dioxide per MM Btu actual heat input from each boiler.

(G) The "Caraustar Industries, Inc." (OEPA premise number 0285020076) or any subsequent owner or operator of the "Caraustar Industries, Inc." facility located on Industrial street, Rittman, Ohio shall not cause or permit the emission of sulfur dioxide from the following sources to exceed the amounts indicated:

(1) Boiler numbers 1 through 3 (OEPA source numbers B001 through B003); a maximum of 7.0 pounds of sulfur dioxide per MM Btu actual heat input from each boiler.

(2) Boiler number 4 (OEPA source number B004); a maximum of 1.2 pounds of sulfur dioxide per MM Btu actual heat input.

(H) The "College of Wooster" (OEPA premise number 0285030180) or any subsequent owner or operator of the "College of Wooster" facility located on East University street, Wooster, Ohio shall not cause or permit the emission of sulfur dioxide from boiler numbers 1 through 3 (OEPA source numbers B001 through B003) to exceed a

maximum of 5.4 pounds of sulfur dioxide per MM Btu actual heat input from each boiler.

Effective: 02/17/2011

R.C. 119.032 review dates: 11/30/2010 and 11/30/2015

CERTIFIED ELECTRONICALLY
Certification

02/07/2011
Date

Promulgated Under: 119.03
Statutory Authority: 3704.03(E)
Rule Amplifies: 3704.03(A), 3704.03(E)
Prior Effective Dates: 12/28/79, 1/23/06

3745-18-92 **Williams county emission limits.**

(A) No owner or operator of any coal-fired steam generating unit, unless otherwise specified in this rule, shall cause or permit the emission of sulfur dioxide from any source to exceed a maximum of 2.6 pounds of sulfur dioxide per MM Btu actual heat input.

(B) The "Toledo Edison Company, Stryker Substation" (OEPA premise number 0386000006) or any subsequent owner or operator of the "Toledo Edison Company, Stryker Substation" facility located on West Lynn street, Stryker, Ohio shall not cause or permit the emission of sulfur dioxide from turbine number 1 (OEPA source number B001) to exceed a maximum of 0.7 pounds of sulfur dioxide per MM Btu actual heat input.

(C) The "Bryan Municipal Light and Water Utilities" (OEPA premise number 0386010200) or any subsequent owner or operator of the "Bryan Municipal Light and Water Utilities" facility located at 225 South Emmitt street, Bryan, Ohio shall not cause or permit the emission of sulfur dioxide from gas turbine numbers 5 and 6 (OEPA source numbers B002 and B003) to exceed a maximum of 0.5 pounds of sulfur dioxide per MM Btu actual heat input from each turbine.

Effective: 02/17/2011

R.C. 119.032 review dates: 11/30/2010 and 11/30/2015

CERTIFIED ELECTRONICALLY
Certification

02/07/2011
Date

Promulgated Under: 119.03
Statutory Authority: 3704.03(E)
Rule Amplifies: 3704.03(A), 3704.03(E)
Prior Effective Dates: 12/28/79

3745-18-93 **Wood county emission limits.**

(A) No owner or operator of any coal-fired steam generating unit, unless otherwise specified in this rule, shall cause or permit the emission of sulfur dioxide from any source to exceed a maximum of 2.6 pounds of sulfur dioxide per MM Btu actual heat input.

(B) [Reserved]

(C) The "Libbey-Owens-Ford Company plant Number 6" (OEPA premise number 0487010012) or any subsequent owner or operator of the "Libbey-Owens-Ford Company Plant Number 6, 140 Dixie highway, Rossford, Ohio" shall not cause or permit the emission of sulfur dioxide from boilers "D" through "F" (OEPA source numbers B002 through B004) to exceed a maximum of 1.1 pounds of sulfur dioxide per MM Btu actual heat input from each boiler.

(D) The "Bowling Green State University" (OEPA premise number 0387029240) or any subsequent owner or operator of the "Bowling Green State University, Bowling Green, Ohio" shall not cause or permit the emission of sulfur dioxide from boiler numbers 1 through 3, and 5 (OEPA source numbers B003 and B004) to exceed a maximum of 4.7 pounds of sulfur dioxide per MM Btu actual heat input from each boiler and shall operate said boilers such that the following combined average operating rates are not exceeded for any calendar day: first quarter, one hundred twenty-two MM Btu per hour; second quarter, one hundred twenty-two MM Btu per hour; third quarter, sixty-five MM Btu per hour; fourth quarter, one hundred twenty-two MM Btu per hour.

Effective: 02/17/2011

R.C. 119.032 review dates: 11/30/2010 and 11/30/2015

CERTIFIED ELECTRONICALLY
Certification

02/07/2011
Date

Promulgated Under: 119.03
Statutory Authority: 3704.03(E)
Rule Amplifies: 3704.03(A), 3704.03(E)
Prior Effective Dates: 12/28/79, 11/1/84, 1/23/06

3745-18-94 **Wyandot county emission limits.**

No owner or operator of any coal-fired steam generating unit, unless otherwise specified in this rule, shall cause or permit the emission of sulfur dioxide from any source to exceed a maximum of 2.6 pounds of sulfur dioxide per MM Btu actual heat input.

Replaces: 3745-18-94

Effective: 02/17/2011

R.C. 119.032 review dates: 11/30/2015

CERTIFIED ELECTRONICALLY
Certification

02/07/2011
Date

Promulgated Under: 119.03
Statutory Authority: 3704.03(E)
Rule Amplifies: 3704.03(A), 3704.03(E)
Prior Effective Dates: 12/28/79

Chapter 3745-19: Open Burning Standards

Contact: Paul Braun 614-644-3734
Paul.braun@epa.ohio.gov

3745-19-01 **Definitions.**

As used in this chapter:

(A) "Agricultural waste" means any waste material generated by crop, horticultural, or livestock production practices, and includes such items as woody debris and plant matter from stream flooding, bags, cartons, structural materials, and landscape wastes that are generated in agricultural activities, but does not include land clearing waste; buildings (including dismantled/fallen barns); garbage; dead animals; animal waste; motor vehicles and parts thereof; nor economic poisons and containers thereof, unless the manufacturer has identified open burning as a safe disposal procedure.

(B) "Air curtain burner" means an engineered apparatus consisting of a motorized high-velocity fan and an air distribution system designed to aid in the efficient combustion of materials placed in a manufactured steel structure and for which a permit-to-install has been obtained as required in Chapter 3745-31 of the Administrative Code and a permit-to-operate has been obtained as required in Chapter 3745-77 of the Administrative Code.

(C) "Air curtain destructor" means an engineered apparatus consisting of a motorized high-velocity fan and an air distribution system designed to aid in the efficient combustion of materials placed in an adjacent pit. An air curtain burner may be used in place of an air curtain destructor, but an air curtain destructor may not be used in place of an air curtain burner.

(D) "Economic poisons" include but are not restricted to pesticides such as insecticides, fungicides, rodenticides, miticides, nematocides and fumigants; herbicides; seed disinfectants; and defoliants.

(E) "Emergency burning" means the burning of clean wood waste or deceased animals caused by a natural disaster or an uncontrolled event such as the following:

(1) A tornado.

(2) High winds.

(3) An earthquake.

(4) An explosion.

(5) A flood.

(6) A hail storm, a rain storm, or an ice storm.

(F) "Garbage" means any waste material resulting from the handling, processing, preparation, cooking and consumption of food or food products.

(G) "Inhabited building" means any inhabited private dwelling house and any public structure which may be used as a place of resort, assembly, education, entertainment, lodging, trade, manufacture, repair, storage, traffic, or occupancy by the public. Examples would include, but are not limited to, highway rest stops, restaurants, motels, hotels and gas stations.

(H) "Landscape waste" means any plant waste material, except garbage, including trees, tree trimmings, branches, stumps, brush, weeds, leaves, grass, shrubbery, yard trimmings, and crop residues.

(I) "Land clearing waste" means plant waste material which is removed from land, including plant waste material removed from stream banks during projects involving more than one property owner, for the purpose of rendering the land useful for residential, commercial, or industrial development. Land clearing waste also includes the plant waste material generated during the clearing of land for new agricultural development.

(J) "Ohio EPA" means the Ohio environmental protection agency director or agencies delegated authority by the director of the Ohio environmental protection agency pursuant to section 3704.03 of the Revised Code or the chief of any Ohio environmental protection agency district office.

(K) "Open burning" means the burning of any materials wherein air contaminants resulting from combustion are emitted directly into the ambient air without passing through a stack or chimney. Open burning includes the burning of any refuse or salvageable material in any device not subject to or designed specifically to comply with the requirements of rule 3745-17-09 or 3745-17-10 of the Administrative Code.

(L) "Residential waste" means any waste material, including landscape waste, generated on the property of a one-, two- or three-family residence as a result of residential activities, but not including garbage, rubber, grease, asphalt, liquid petroleum products, or plastics.

(M) "Restricted area" means the following:

(1) Except as provided in paragraph (K)(2) of this rule, the area within the boundary of any municipal corporation established in accordance with the provisions of Title 7 of the Revised Code, plus a zone extending one thousand feet beyond the boundaries of any such municipal corporation having a population of one thousand to ten thousand persons and a zone extending one mile beyond any such municipal corporation having a population of ten thousand persons or more according to the latest federal census.

(2) "Restricted area" shall not include any municipal corporation the territory of which is located on an island in Lake Erie except that, during the yearly period between Memorial Day and Labor Day, any such municipal corporation shall be required to comply with the requirements of rule 3745-19-03 of the Administrative Code.

(N) "Unrestricted area" means all areas outside the boundaries of a restricted area as defined in paragraph (M) of this rule.

(O) Referenced materials. This chapter includes references to certain matter or materials. The text of the referenced materials is not included in the rules contained in this chapter. Information on the availability of the referenced materials as well as the date of, and/or the particular edition or version of the material is included in this rule. For materials subject to change, only the specific versions specified in this rule are referenced. Material is referenced as it exists on the effective date of this rule. Except for subsequent annual publication of existing (unmodified) Code of Federal Regulation compilations, any amendment or revision to a referenced document is not applicable unless and until this rule has been amended to specify the new dates.

(1) Availability. The referenced materials are available as follows:

(a) Clean Air Act. Information and copies may be obtained by writing to: "Superintendent of Documents, Attn: New Orders, PO Box 371954, Pittsburgh, PA 15250-7954." The full text of the act as amended in 1990 is also available in electronic format at www.epa.gov/oar/caa/. A copy of the act is also available for inspection and use at most public libraries and "The State Library of Ohio."

(b) Code of Federal Regulations (CFR). Information and copies may be obtained by writing to: "Superintendent of Documents, Attn: New Orders, PO Box 371954, Pittsburgh, PA 15250-7954." The full text of the CFR is also available in electronic format at http://www.ecfr.gov. The CFR compilations are also available for inspection and use at most public libraries and "The State Library of Ohio."

(c) National fire protection association. Information on the national protection association codes may be obtained by contacting the association at 1 Batterymarch park, Quincy, Massachusetts 02169-7471, 617-770-3000. Codes may be ordered www.nfpa.org/catalog/home/index.asp. Copies of the code exist or are available at most public libraries and "The State Library of Ohio."

(2) Referenced materials.

(a) 40 CFR 60.2974; "Am I required to apply for and obtain a title V operating permit for my air curtain incinerator that burns only wood waste, clean

lumber, and yard waste?;" as published in the July 1, 2012 Code of Federal Regulations.

(b) 40 CFR 60.3069; "Am I required to apply for and obtain a title V operating permit for my air curtain incinerator that burns only wood waste, clean lumber, and yard waste?;" as published in the July 1, 2012 Code of Federal Regulations.

(c) NFPA publication 1403; "Standard on Live Fire Training Evolutions, Chapter 4, Acquired Structures;" published April 30, 2007.

(d) Section 129 of the Clean Air Act; contained in 42 USC 7429; "Solid waste combustion;" published January 2, 2006 in Supplement V of the 2000 Edition of the United States Code.

Effective: 08/18/2013

R.C. 119.032 review dates: 05/27/2017

CERTIFIED ELECTRONICALLY
Certification

08/08/2013
Date

Promulgated Under: 119.03
Statutory Authority: 3704.03(E)
Rule Amplifies: 3704.03(A), 3704.03(E)
Prior Effective Dates: 6/21/76, 10/30/87, 12/20/88, 11/27/00, 07/07/06, 05/27/12

3745-19-02 **Relations to other prohibitions.**

(A) Notwithstanding any provision in this chapter, no open burning shall be conducted in an area where an air alert, warning, or emergency under Chapter 3745-25 of the Administrative Code is in effect.

(B) No provisions of this chapter, permitting open burning, and no permission to open burn granted by the Ohio EPA, shall exempt any person from compliance with any section of the Revised Code, or any regulation of any state department, or any local ordinance or regulation dealing with open burning.

Effective: 05/27/2012

R.C. 119.032 review dates: 01/30/2012 and 05/27/2017

CERTIFIED ELECTRONICALLY
Certification

05/17/2012
Date

Promulgated Under: 119.03
Statutory Authority: 3704.03(E)
Rule Amplifies: 3704.03(A), 3704.03(E)
Prior Effective Dates: 9/21/73, 10/20/87, 07/07/06

3745-19-03 **Open burning in restricted areas.**

[Comment: For dates of non-regulatory government publications, publications of recognized organizations and associations, federal rules, and federal statutory provisions referenced in this rule, see paragraph (M) of rule 3745-19-01 of the Administrative Code titled "Referenced materials."]

(A) No person or property owner shall cause or allow open burning in a restricted area except as provided in paragraphs (B) to (D) of this rule or in section 3704.11 of the Revised Code.

(B) Open burning shall be allowed for the following purposes without notification to or permission from the Ohio EPA:

(1) Heating tar, welding, acetylene torches, highway safety flares, heating for warmth of outdoor workers and strikers, smudge pots and similar occupational needs.

(2) Bonfires, campfires and outdoor fireplace equipment, whether for cooking food for human consumption, pleasure, religious, ceremonial, warmth, recreational, or similar purposes, if the following conditions are met:

(a) They are fueled with clean seasoned firewood, natural gas or equivalent, or any clean burning fuel with emissions that are equivalent to or lower than those created from the burning of seasoned firewood;

(b) They are not used for waste disposal purposes; and

(c) They shall have a total fuel area of three feet or less in diameter and two feet or less in height.

(3) Disposal of hazardous explosive materials, military munitions or explosive devices that require immediate action to prevent endangerment of human health, public safety, property or the environment and that are excluded from the requirement to obtain a hazardous waste permit pursuant to paragraph (D)(1)(d) of rule 3745-50-45 of the Administrative Code.

(4) Recognized training in the use of fire extinguishers for commercial or industrial fire prevention.

(5) Fires set at the direction of federal, state, and local law enforcement officials for the purpose of destruction of cannabis sativa (marijuana) plant vegetation, processed marijuana material and/or other drugs seized by federal, state, or local law enforcement officials.

Fires allowed by paragraphs (B)(1), (B)(2) and (B)(4) of this rule shall not be used for waste disposal purposes and shall be of minimum size sufficient for their intended purpose; the fuel shall be chosen to minimize the generation and emission of air contaminants.

(C) Open burning shall be allowed for the following purposes with prior notification to the Ohio EPA in accordance with paragraph (B) of rule 3745-19-05 of the Administrative Code:

(1) Prevention or control of disease or pests, with written or oral verification to the Ohio EPA from the Ohio department of health or local health department, the centers for disease control and prevention, cooperative extension service, Ohio department of agriculture, or United States department of agriculture, that open burning is the only appropriate disposal method.

(2) Bonfires or campfires used for ceremonial purposes that do not meet the requirements of paragraph (B)(2) of this rule, provided the following conditions are met:

(a) They have a total fuel area no greater than five feet in diameter by five feet in height and burn no longer than three hours;

(b) They are not used for waste disposal purposes; and

(c) They are fueled with clean seasoned firewood, natural gas or equivalent, or any clean burning fuel with emissions that are equivalent to or lower than those created from the burning of seasoned firewood.

(3) Disposal of agricultural waste generated on the premises if the following conditions are observed:

(a) The fire is set only when atmospheric conditions will readily dissipate contaminants;

(b) The fire does not create a visibility hazard on the roadways, railroad tracks, or air fields;

(c) The fire is located at a point on the premises no less than one thousand feet from any inhabited building not located on said premises;

(d) The wastes are stacked and dried to provide the best practicable condition for efficient burning; and

(e) No materials are burned which contain rubber, grease, asphalt, liquid petroleum products, plastics or building materials.

(D) Open burning shall be allowed for the following purposes upon receipt of written permission from the Ohio EPA, in accordance with paragraph (A) of rule 3745-19-05 of the Administrative Code, provided that any conditions specified in the permission are followed:

(1) Disposal of ignitable or explosive materials where the Ohio EPA determines that there is no practical alternate method of disposal, excluding those materials identified in paragraph (B)(3) of this rule;

(2) Instruction in methods of fire fighting or for research in the control of fire as recognized by the state fire marshal division of the Ohio department of commerce and the guidelines set forth in the national fire protection association's (NFPA) publication 1403: "Standard on Live Fire Training Evolutions, Chapter 4, Acquired Structures," provided that the application required in paragraph (A)(1) of rule 3745-19-05 of the Administrative Code is submitted by the commercial or public entity responsible for the instruction;

(3) In emergency or other extraordinary circumstances for any purpose determined to be necessary by the director and, if required, performed as identified in the appendix to this rule. If deemed necessary, the open burning may be authorized with prior oral approval by the director followed by the issuance of a written permission to open burn within seven working days of the oral approval;

(4) Recognized horticultural, silvicultural (forestry), range, or wildlife management practices; and

(5) Fires and/or pyrotechnic effects, for purposes other than waste disposal, set as part of commercial film-making or video production activities for motion pictures and television.

Effective: 05/27/2012

R.C. 119.032 review dates: 01/30/2012 and 05/27/2017

CERTIFIED ELECTRONICALLY
Certification

05/17/2012
Date

Promulgated Under: 119.03
Statutory Authority: 3704.03(E)
Rule Amplifies: 3704.03(A), 3704.03(E)
Prior Effective Dates: 6/21/76, 10/30/87, 12/20/88, 11/27/00, 07/07/06

3745-19-03 Appendix

Open Burning of Storm Debris Conditions for
"Extraordinary Circumstances" Approvals Issued to Communities Demonstrating a Severe Economic Hardship for the Disposal of Storm Debris Under rules 3745-19-03(D)(3) or 3745-19-04(C)(3) of the Administrative Code

If a community is located in an area that was declared a state of emergency by the governor for a natural disaster, such an ice storm, tornado or flood, and the community has demonstrated a severe economic hardship in accordance with the community hardship table below, that would prevent disposal techniques such as chipping or the use of an air curtain destructor, Ohio EPA under paragraph (D)(3) of rule 3745-19-03 or paragraph (C)(3) of rule 3745-19-04 of the Administrative Code, may allow for the open burning of trees and vegetative wastes provided the local community meets the following guidelines. The local community must request and receive an Ohio EPA open burning permit from the director and the community must follow the following guidelines for open burning of the vegetative material, trees and tree limbs.

1. The material burned must be limited to vegetative material, trees and tree limbs resulting from a natural disaster.
2. All material to be burned shall be dry and in a state to sustain good combustion.
3. No burning shall take place within:
    a. one hundred feet of any uninhabited structure or powerline;
    b. three hundred feet of a frequently traveled municipal or township road;
    c. five hundred feet of any state highway;
    d. one thousand feet of any interstate highway;
    e. one-half mile from any school or day care;
    f. one mile from any hospital, nursing home or any other type of health care facility;
    g. one thousand feet from any inhabited building;
    h. one thousand feet from any fuel storage facility with three or less tanks or above ground petroleum or natural gas pipeline; or
    i. one-half mile from any fuel storage facility with three or more tanks.
4. All fires must be attended at all times during burning until completely extinguished.
5. Burning may not be conducted during unfavorable meteorological conditions such as:
    a. high winds;
    b. temperature inversions;
    c. air stagnation; or

Appendix (cont)

a. when a pollution alert or ozone action day has been declared.

6. If at any time a fire creates:
   a. a threat to public health;
   b. a nuisance; or
   c. a fire hazard;

   the burning shall be extinguished.
7. All burning shall comply with other federal, state, and local laws, rules, and ordinances.
8. Adequate firefighting equipment shall be on-site for extinguishing purposes during burning times.
9. Burning shall be conducted during daylight hours only, and all fires shall be extinguished prior to sunset.
10. The pile to be burned shall be less than or equal to five thousand cubic yards and only one pile may be burned at a time.
11. The district office of Ohio EPA or the local air agency along with the local fire department and health department must be notified at least twenty-four hours in advance of the date and time of the burning.
12. The open burning permit shall be made available at the burning site to state and local officials upon request.
13. The open burning permit shall be valid for no longer than three months from the date of issuance.
14. Any change in the plan must receive an additional approval from the Ohio EPA district office or local air agency, unless the change is to reduce open burning.
15. The Director may add conditions to an approval letter, as necessary, to prevent a public nuisance or protect the public health or the environment. Such conditions may be based on local air quality conditions, including whether the area is a nonattainment county or has been redesignated from nonattainment to attainment status.

Ohio Environmental Protection Agency
Permit Requirements for Air Curtain Destructors Employed for Landscape Waste

The accumulation and open burning with air curtain destructors (ACDs) of storm debris shall be allowed by municipalities upon receipt of written permission from Ohio EPA or the appropriate local air agency, provided the following conditions are met:

1. The material to be burned shall be limited to vegetative material, trees and tree limbs.
2. The ACD shall be at least 0.5 mile from any hospital, day care, nursing home or any other type of health care facility.

Appendix (cont)

3. The ACD shall be at least five hundred feet from any inhabited building not located on said premises.
4. All material to be burned shall be dry and in a state to sustain good combustion.
5. Burning may not be conducted during unfavorable meteorological conditions such as high winds, temperature inversions, air stagnation, when a pollution alert or ozone action day has been declared. The open burning shall not create a nuisance. The emission of smoke, ashes, dust, dirt, odors or any other substance in such a matter or amount as to endanger the health, safety or
welfare of the public or cause unreasonable injury or damage to property, is a public nuisance and is prohibited.
6. All material shall be burned in an open pit which shall be constructed as follows:
   a. The pit shall be rectangular in shape with four vertical walls.
   b. The maximum length shall be no longer than the blower manifold.
   c. The maximum width shall be less than ten feet. A width of six to eight feet is recommended.
   d. The nozzles are to be directed down into the pit at a twenty-five to thirty degree angle from the horizontal.
7. The ACD may be shut off during start-up for a maximum of twenty-five minutes. Otherwise, the ACD must remain in operation until the fire has been completely extinguished. Smoldering will not be allowed.
8. The burn pit is not to be loaded above two-thirds of its total depth.
9. The loading of the pit shall be done in such a way as to minimize the amount of soil entering the pit.
10. The community must have personnel present at all times when open burning is taking place.
11. The Ohio EPA or local air agency inspector shall be notified when open burning will take place and shall be allowed complete access to the site before, during and after the operation of the ACD.

Appendix (cont)

Community Hardship Table

Village/Township/ City Size	Population	Controlled Burning Option	Open Burning Option*
Small Community	Population of less than 5,000	Open burning of storm debris allowed using air curtain destructor if the following conditions apply: (1) area was declared a state of emergency by the governor and (2) disposal of storm debris using other disposal methods exceeds $5,000.	Open burning of storm debris if the following conditions apply: (1) area was declared a state of emergency by the governor and (2) disposal of storm debris using other disposal methods exceeds $5,000
Medium Community	Population of greater than 5,000, but less than 25,000	Open burning of storm debris allowed using air curtain destructor if the following conditions apply: (1) area was declared a state of emergency by the governor and (2) disposal of storm debris using other disposal methods exceeds $10,000.	Open burning of storm debris allowed if the following conditions apply: (1) area was declared a state of emergency by the governor and (2) disposal of storm debris using other disposal methods exceeds $10,000.
Large Community	Population greater than 25,000	Open burning of storm debris allowed using air curtain destructor if the following conditions apply: (1) area was declared a state of emergency by the governor and (2) disposal of storm debris using other disposal methods exceeds $20,000.	Open burning of storm debris allowed if the following conditions apply: (1) area was declared a state of emergency by the governor and (2) disposal of storm debris using other disposal methods exceeds $20,000.

*Allowed only if specifically approved by the director in response to community's demonstration of severe economic hardship.

3745-19-04 **Open burning in unrestricted areas.**

[Comment: For dates of non-regulatory government publications, publications of recognized organizations and associations, federal rules, and federal statutory provisions referenced in this rule, see paragraph (O) of rule 3745-19-01 of the Administrative Code titled "Referenced materials."]

(A) No person or property owner shall cause or allow open burning in an unrestricted area except as provided in paragraphs (B) to (D) of this rule or in section 3704.11 of the Revised Code.

(B) Open burning shall be allowed for the following purposes without notification to or permission from the Ohio EPA, except as required in paragraph (B)(3)(f) of this rule:

(1) Heating tar, welding, acetylene torches, highway safety flares, heating for warmth of outdoor workers and strikers, smudge pots, and similar occupational needs.

(2) Bonfires, campfires and outdoor fireplace equipment, whether for cooking food for human consumption, pleasure, religious, ceremonial, warmth, recreational, or similar purposes, if the following conditions are met:

(a) They are fueled with clean seasoned firewood, natural gas or equivalent, or any clean burning fuel with emissions that are equivalent to or lower than those created from the burning of seasoned firewood;

(b) They are not used for waste disposal purposes; and

(c) They shall have a total fuel area of three feet or less in diameter and two feet or less in height except when such fire is used for ceremonial purposes it may have a total fuel area no greater than five feet in diameter and five feet in height, if the ceremonial fire burns no longer than three hours.

(3) Disposal of residential waste or agricultural waste generated on the premises if the following conditions are observed:

(a) The fire is set only when atmospheric conditions will readily dissipate contaminants;

(b) The fire does not create a visibility hazard on the roadways, railroad tracks, or air fields;

(c) The fire is located at a point on the premises no less than one thousand feet from any inhabited building not located on said premises;

(d) The wastes are stacked and dried to provide the best practicable condition for efficient burning; and

(e) No materials are burned which contain rubber, grease, asphalt, liquid petroleum products, plastics or building materials.

(f) Prior notification to the Ohio EPA in accordance with paragraph (B) of rule 3745-19-05 of the Administrative Code shall be required for the disposal of agricultural waste if the size of waste pile exceeds twenty feet in diameter by ten feet in height (or four thousand cubic feet) and for residential waste if the size of the waste pile exceeds ten feet by ten feet by ten feet (or one thousand cubic feet).

(4) Disposal of hazardous explosive materials, military munitions or explosive devices that require immediate action to prevent endangerment of human health, public safety, property or the environment and that are excluded from the requirement to obtain a hazardous waste permit pursuant to paragraph (D)(1)(d) of rule 3745-50-45 of the Administrative Code.

(5) Recognized training in the use of fire extinguishers for commercial or industrial fire prevention.

(6) Fires set at the direction of federal, state, and local law enforcement officials for the purpose of destruction of cannabis sativa (marijuana) plant vegetation, processed marijuana material and/or other drugs seized by federal, state, or local law enforcement officials.

Fires allowed by paragraphs (B)(1), (B)(2) and (B)(5) of this rule shall not be used for waste disposal purposes, and shall be of the minimum size sufficient for their intended purpose; the fuel shall be chosen to minimize the generation and emission of air contaminants.

(C) Open burning shall be allowed for the following purposes upon receipt of written permission from the Ohio EPA, in accordance with paragraph (A) of rule 3745-19-05 of the Administrative Code, provided that any conditions specified in the permission are followed:

(1) Disposal of ignitable or explosive materials where the Ohio EPA determines that there is no practical alternate method of disposal, excluding those materials identified in paragraph (B)(4) of this rule;

(2) Instruction in methods of fire fighting or for research in the control of fire as recognized by the state fire marshal division of the Ohio department of commerce and the guidelines set forth in the national fire protection asssociation's (NFPA) publication 1403: "Standard on Live Fire Training Evolutions, Chapter 4, Acquired Structures," provided that the application required in paragraph (A)(1) of rule 3745-19-05 of the Administrative Code is submitted by the commercial or public entity responsible for the instruction;

(3) In emergency or other extraordinary circumstances for any purpose determined to be necessary by the director and, if required, performed as identified in the appendix to rule 3745-19-03 of the Administrative Code. If deemed necessary, the open burning may be authorized with prior oral approval by the director followed by the issuance of a written permission to open burn within seven working days of the oral approval;

(4) Disposal of land clearing waste generated on the premises if the following conditions are observed:

(a) The fire is set only when atmospheric conditions will readily dissipate contaminants;

(b) The fire does not create a visibility hazard on roadways, railroad tracks, or air fields;

(c) The fire is located at a point on the premises no less than one thousand feet from any inhabited building not located on said premises; and

(d) An air curtain destructor or other device or method determined by the director to be at least as effective is used to curtail release of air contaminants;

(5) Recognized horticultural, silvicultural (forestry), range, or wildlife management practices; and

(6) Fires and/or pyrotechnic effects, for purposes other than waste disposal, set as part of commercial film-making or video production activities for motion pictures and television.

(7) Disposal of land clearing waste utilizing an air curtain burner if the following conditions are met:

(a) The owner or operator shall apply for a permit-to-install as required in Chapter 3745-31 of the Administrative Code and a title V permit as required in Chapter 3745-77 of the Administrative Code.

[Comment: Pursuant to Section 129 of the Clean Air Act and 40 CFR 60.2974 and 40 CFR 60.3069, air curtain burners are subject to and must fulfill the requirements of the Title V permitting program and must apply for and obtain a title V air permit.]

(b) The siting of the air curtain burner shall be at a point on the premises no less than one thousand feet from any inhabited building not located on said premises.

(c) No materials may be charged to the burner less than thirty minutes after sunrise and shall be completed not less than sixty minutes prior to sunset. A

log shall be maintained on site, and available upon request, that documents daily beginning and ending times of charging.

(d) The air curtain burner shall be attended at all times while burning is occurring and until flames are no longer visible.

(e) The air curtain shall be maintained until all material within the air curtain burner has been reduced to coals, and flames are no longer visible.

(f) At no time shall material be loaded into the air curtain burner such that the material extends into and above the air curtain, except for brief moments during loading.

(g) The air curtain burner shall be used only for the disposal of land clearing wastes as defined in paragraph (I) of rule 3745-19-01 of the Administrative Code.

(D) Open burning shall be allowed, with prior notification to the Ohio EPA in accordance with paragraph (B) of rule 3745-19-05 of the Administrative Code; for the purpose of prevention or control of disease or pests, with written or oral verification to the Ohio EPA from the Ohio department of health or local health department, the centers for disease control and prevention, cooperative extension service, Ohio department of agriculture, or United States department of agriculture, that open burning is the only appropriate disposal method.

Effective: 08/18/2013

R.C. 119.032 review dates: 05/27/2017

CERTIFIED ELECTRONICALLY
Certification

08/08/2013
Date

Promulgated Under: 119.03
Statutory Authority: 3704.03(E)
Rule Amplifies: 3704.03(A), 3704.03(E)
Prior Effective Dates: 6/21/76, 10/30/87, 12/20/98, 11/27/00, 07/07/06, 05/27/12

3745-19-05 **Permission to individuals and notification to the Ohio EPA.**

(A) Permission:

(1) An application for permission to open burn shall be submitted in writing to Ohio EPA. The applicant shall allow Ohio EPA at least ten working days to review the permit. Applicant may proceed with burn upon receipt of written permission from Ohio EPA. Saturday, Sunday, and legal holidays shall not be considered working days. The application shall be in such form and contain such information as required by the Ohio EPA.

(2) Except as provided in paragraphs (A)(6) and (A)(7) of this rule, such applications shall contain, a minimum, information regarding:

(a) The purpose of the proposed burning;

(b) The quantity or acreage and the nature of the materials to be burned;

(c) The date or dates when such burning will take place;

(d) The location of the burning site, including a map showing distances to residences, populated areas, roadways, air fields, and other pertinent landmarks; and

(e) The methods or actions which will be taken to reduce the emissions of air contaminants.

(3) Permission to open burn shall not be granted unless the applicant demonstrates to the satisfaction of the Ohio EPA that open burning is necessary to the public interest; will be conducted in a time, place, and manner as to minimize the emission of air contaminants, when atmospheric conditions are appropriate; and will have no serious detrimental effect upon adjacent properties or the occupants thereof. The Ohio EPA may impose such conditions as may be necessary to accomplish the purpose of this chapter.

(4) Except as provided in paragraph (A)(6) of this rule, permission to open burn must be obtained for each specific project. In emergencies where public health or environmental quality will be seriously threatened by delay while written permission is sought, the fire may be set with oral permission of the Ohio EPA.

(5) Violations of any of the conditions set forth by the Ohio EPA in granting permission to open burn shall be grounds for revocation of such permission and refusal to grant future permission, as well as for the imposition of other sanctions provided by law.

(6) The Ohio department of commerce, division of state fire marshal, may request permission to open burn on an annual basis for the purpose of training firefighters on pre-flashover conditions using the Ohio fire academy's mobile training laboratory at either the academy or at other training sites in Ohio. The annual application required pursuant to paragraph (A)(1) of this rule shall contain information as required in paragraph (A)(2) of this rule, except the information required in paragraphs (A)(2)(c) and (A)(2)(d) of this rule need not be provided unless it is available at the time of submittal of the application. The academy shall contact the appropriate Ohio EPA district office or local air agency at least five working days before each training session of the date or dates when the training session will take place and its location. Saturday, Sunday, and legal holidays shall not be considered working days.

(7) For open burning defined under paragraph (D)(2) of rule 3745-19-03 and paragraph (C)(2) of rule 3745-19-04 of the Administrative Code, permission to open burn shall not be granted unless the applicant provides proof of written notice of intent to demolish received by the appropriate Ohio EPA field office in accordance with rule 3745-20-03 of the Administrative Code.

(B) Notification:

(1) Notification shall be submitted in writing at least ten working days before the fire is to be set. Saturday, Sunday, and legal holidays shall not be considered working days. It shall be in such form and contain such information as shall be required by the Ohio EPA.

(2) Such notification shall inform the Ohio EPA regarding:

(a) The purpose of the proposed burning;

(b) The nature and quantities of materials to be burned;

(c) The date or dates when such burning will take place; and

(d) The location of the burning site.

(3) The Ohio EPA, after receiving notification, may determine that the open burning is not allowed under this chapter and the Ohio EPA shall notify the applicant to this effect.

Effective: 05/27/2012

R.C. 119.032 review dates: 01/30/2012 and 05/27/2017

CERTIFIED ELECTRONICALLY
Certification

05/17/2012
Date

Promulgated Under: 119.03
Statutory Authority: 3704.03(E)
Rule Amplifies: 3704.03(A), 3704.03(E)
Prior Effective Dates: 9/21/73, 11/30/87, 11/27/00, 07/07/06

3745-19-06 **Open burning unilateral order.**

(A) The director may assess and collect administrative penalties from any person who violates any of the rules in this chapter. Through unilateral orders, the director may assess a violator not more than two hundred fifty dollars per day for each separate violation of the rules in this chapter for open burning of residential waste and not more than one thousand dollars per day for each separate violation of the rules in this chapter for open burning of all wastes that are not residential waste. A separate violation is assessed for each day (twenty-four hour period) or portion of a day the violation occurs.

(B) The director's authority under paragraph (A) of this rule is in addition to, and not in limitation of, the director's authority under section 3704.06 of the Revised Code to request the attorney general to initiate legal action to seek penalties of not more than twenty-five thousand dollars for each day of each violation for the violation of rules in this chapter.

Effective: 05/27/2012

R.C. 119.032 review dates: 01/30/2012 and 05/27/2017

CERTIFIED ELECTRONICALLY
Certification

05/17/2012
Date

Promulgated Under: 119.03
Statutory Authority: 3704.03(E)
Rule Amplifies: 3704.03(A), 3704.03(E)
Prior Effective Dates: 07/07/2006

Chapter 3745-20: Asbestos Emission Control

Contact: Frederick Jones 614-644-3591
Frederick.jones@epa.ohio.gov

3745-20-01 **Definitions and incorporation by reference.**

[Comment: For dates of non-regulatory government publications, publications of recognized organizations and associations, federal rules, and federal statutory provisions referenced in this rule, please see paragraph (C) of this rule, "Referenced materials."]

(A) Except as otherwise provided in paragraph (B) of this rule, the definitions in rule 3745-15-01 of the Administrative Code shall apply to this chapter.

(B) The following definitions shall apply exclusively to this chapter:

(1) "Active waste disposal site" means any disposal site of asbestos materials other than an inactive disposal site.

(2) "Adequately wet" means sufficiently mix or penetrate with liquid to prevent the release of particulates. If visible emissions are observed coming from asbestos-containing material, then that material has not been adequately wetted. However, the absence of visible emissions is not sufficient evidence of being adequately wet.

(3) "Asbestos" means the asbestiform varieties of serpentinite (chrysotile), riebeckite (crocidolite), cummingtonite-grunerite, anthophyllite, and actinolite-tremolite, as determined using the method specified in 40 CFR, Part 763, Subpart E, Appendix E, Section 1, Polarized Light Microscopy (PLM).

(4) "Asbestos-containing waste materials" means mill tailings or any waste that contains commercial asbestos and is generated by a source subject to the provisions of this chapter. This term includes filters from control devices, friable asbestos-containing material, and bags or other similar packaging contaminated with commercial asbestos. As applied to demolition and renovation operations, this term also includes regulated asbestos-containing material waste and materials contaminated with asbestos including disposable equipment and clothing.

(5) "Asbestos material" means asbestos or any material containing asbestos.

(6) "Asbestos mill" means any facility engaged in converting, or in any intermediate step in converting, asbestos ore into commercial asbestos. Outside storage of asbestos material is not considered a part of the asbestos mill.

(7) "Asbestos tailings" means any solid waste that contains asbestos and is a product of asbestos mining or milling operations.

(8) "Asbestos waste from control devices" means any waste material that contains asbestos and is collected by a pollution control device.

(9) "Category I nonfriable asbestos-containing material" means asbestos-containing packing, gaskets, resilient floor covering, and asphalt roofing products containing more than one per cent asbestos as determined using the method specified in 40 CFR Part 763, Subpart E, Appendix E, Section 1, Polarized Light Microscopy (PLM).

(10) "Category II nonfriable asbestos-containing material" means any material, excluding Category I nonfriable asbestos-containing material, containing more than one percent asbestos as determined using the method specified in 40 CFR Part 763, Subpart E, Appendix E, Section 1, Polarized Light Microscopy (PLM), that, when dry, cannot be crumbled, pulverized, or reduced to powder by hand pressure.

(11) "Commercial asbestos" means any material containing asbestos that is extracted from ore and has value because of its asbestos content.

(12) "Cutting" means to penetrate with a sharp-edged instrument and includes sawing, but does not include shearing, slicing, or punching.

(13) "Demolition" means the wrecking, or taking out of any load-supporting structural member of a facility together with any related handling operations or the intentional burning of any facility.

(14) "Emergency demolition" means any demolition operation conducted under a written order issued by a state or local governmental agency because a facility is structurally unsound and in danger of imminent collapse.

(15) "Emergency renovation operation" means a renovation operation that was not planned but results from a sudden, unexpected event that, if not immediately attended to, presents a safety or public health hazard, is necessary to protect equipment from damage, or is necessary to avoid imposing an unreasonable financial burden. This term includes operations necessitated by nonroutine failures of equipment.

(16) "Encapsulate" means to coat, bind or resurface walls, ceilings, pipes or other structures or asbestos-containing materials with suitable products to prevent friable asbestos from becoming airborne.

(17) "Fabricating" means any processing (including but not limited to cutting, sawing, drilling) of a manufactured product that contains commercial asbestos, with the exception of processing at temporary sites (field fabricating) for the construction or restoration of facilities. In the case of friction products,

fabricating includes bonding, debonding, grinding, sawing, drilling, or other similar operations performed as part of fabricating.

(18) "Facility" means any institutional, commercial, public, industrial or residential structure, installation, or building (including any structure, installation, or building containing condominiums or individual dwelling units operated as a residential cooperative, but excluding residential buildings having four or fewer dwelling units); any ship; and any active or inactive waste disposal site. For purposes of this definition, any structure, installation or building that contains a loft used as a dwelling is not considered a residential structure, installation or building. Any structure, installation or building that was previously subject to this rule due to its prior use or function is not excluded, regardless of its current use or function.

(19) "Facility component" means any part of a facility, including but not limited to any structural member, pipe, duct, boiler, tank, reactor, turbine, furnace, or other equipment at or in a facility; or any structural member of a facility.

(20) "Friable asbestos material" means any material containing more than one per cent asbestos by area, as determined using the method specified in 40 CFR Part 763, Subpart E, Appendix E, Section 1 Polarized Light Microscopy (PLM), that, when dry can be crumbled, pulverized, or reduced to powder by hand pressure. If the asbestos content is less than ten percent as determined by a method other than point counting by Polarized Light Microscopy, verify the asbestos content by point counting using Polarized Light Microscopy. Any category I or category II asbestos containing material that becomes damaged from either deterioration or attempts at removal or abatment resulting in small fragments the size of four square inches or less shall also be considered friable or RACM.

(21) "Fugitive source" means any source of emissions not controlled by an air pollution control device.

(22) "General ventilation device" means any air moving device specifically designed for increasing air flow through an area and exhausting the air through a HEPA filter in such a way that there is no bypass of air around the filter.

(23) "Glove bag" means a sealed compartment with attached inner gloves used for the handling of asbestos-containing materials.

(24) "Grinding" means to reduce to powder or small fragments and includes mechanical chipping or drilling.

(25) "HEPA filter" means a high efficiency particulate air filter certified by the manufacturer to have a collection efficiency of not less than ninety-nine and ninety-seven one hundreths per cent as determined by ASTM D2986-71.

(26) "In poor condition" means the binding of the material is losing its integrity as indicated by peeling, cracking, or crumbling of the material.

(27) "Inactive waste disposal site" means any disposal site or portion thereof, which contains asbestos-containing waste materials, but where such material has not been deposited within the past year.

(28) "Installation" means any building or structure or any group of buildings or structures at a single demolition or renovation site that are under the control of the same owner or operator, or owner or operator under common control.

(29) "Leak-tight" means that liquids cannot escape or spill out. It also means dust-tight.

(30) "Local exhaust ventilation and collection system" means equipment designed to collect or capture particulate material at the point of generation and which exhausts air through a HEPA filter so that there is no bypass of air around the filter.

(31) "Malfunction" means any sudden and unavoidable failure of air pollution control equipment or process equipment, or the failure of a process to operate in a normal or usual manner so that asbestos emissions are increased. Failures of equipment shall not be considered malfunctions if they are caused in any way by poor maintenance, careless operation, or any other preventable upset conditions, equipment breakdown, or process failure.

(32) "Manufacturing" means the combining of commercial asbestos, or, in the case of woven friction products, the combining of textiles containing commercial asbestos, with any other materials(s), including commercial asbestos, and the processing of this combination into a product. Chlorine production is considered a part of manufacturing.

(33) "Natural barrier" means a natural object that effectively precludes or deters access. Natural barriers include physical obstacles such as cliffs, lakes, or other large bodies of water, deep and wide ravines, and mountains. Remoteness by itself is not a natural barrier.

(34) "NESHAP" means national emission standards for hazardous air pollutants.

(35) "Nonfriable asbestos-containing material" means any material containing more than one per cent asbestos as determined using the method specified in 40 CFR Part 763, Subpart E, Appendix E, Section 1, Polarized Light Microscopy (PLM) that, when dry, cannot be crumbled, pulverized, or reduced to powder by hand pressure.

(36) "Nonscheduled renovation operation" means a renovation operation necessitated by the routine failure of equipment, which is expected to occur within a given period based on past operating experience, but for which an exact date cannot be predicted.

(37) "Ohio EPA field office" means any Ohio environmental protection agency district office or local air agency.

(38) "Outside air" means the air outside buildings and structures, including, but not limited to, the air under a bridge or in an open air ferry dock.

(39) "Owner or operator" means:

(a) As it applies to rules 3745-20-02 to 3745-20-05 of the Administrative Code, any person who owns, leases, operates, controls, or supervises the facility being demolished or renovated or any person who owns, leases, operates, controls or supervises the demolition or renovation, or both; or

(b) As it applies to rules 3745-20-06 to 3745-20-07 of the Administrative Code, any person who owns, leases, operates, controls, or supervises an active or inactive asbestos waste disposal site or operation; or

(c) As it applies to rules 3745-20-08 to 3745-20-15 of the Administrative Code, any person who owns, leases, operates, controls, or supervises the activities referenced in those rules.

(40) "Particulate asbestos material" means finely divided particles of asbestos or material containing asbestos.

(41) "Planned renovation operations" means any renovation operation, or a number of such operations, in which some regulated asbestos-containing material will be removed or stripped within a given period of time and that can be predicted. Individual nonscheduled operations are included if a number of such operations can be predicted to occur during a given period of time, based on operating experience.

(42) "Regulated asbestos-containing material" means:

(a) Friable asbestos material;

(b) Category I nonfriable asbestos-containing material that has become friable;

(c) Category I nonfriable asbestos-containing material that will be or has been subjected to sanding, grinding, cutting, or abrading; or

(d) Category II non friable asbestos-containing material that has a high probability of becoming or has become crumbled, pulverized, or reduced to powder by the forces expected to act on the material in the course of demolition or renovation operations regulated by this chapter.

(43) "Remove" means to take out regulated asbestos-containing material or facility components that contain or are covered with regulated asbestos-containing material from any facility.

(44) "Renovation" means altering a facility or one or more facility components in any way, including the stripping or removal of regulated asbestos-containing material from a facility component. Operations in which load-supporting structural members are wrecked or taken out are demolitions.

(45) "Resilient floor covering" means asbestos-containing floor tile, including asphalt and vinyl floor tile, and sheet vinyl floor covering containing more than one per cent asbestos as determined using the method specified in 40 CFR Part 763, Subpart E, Appendix E, Section 1, Polarized Light Microscopy (PLM).

(46) "Roadways" means surfaces on which vehicles travel. This term includes public and private highways, roads, streets, parking areas, and driveways.

(47) "Strip" means to take off regulated asbestos-containing material from any part of a facility or facility components.

(48) "Structural member" means any load-supporting member of a facility, such as beams and load supporting walls; or any nonload-supporting member such as ceilings and nonload-supporting walls.

(49) "USEPA" means United States environmental protection agency.

(50) "Visible emissions" means any emissions that are visually detectable without the aid of instruments, coming from regulated asbestos-containing material or asbestos-containing waste material, or from any asbestos milling, manufacturing, or fabricating operation. This does not include condensed uncombined water vapor.

(51) "Waste generator" means any owner or operator of a source subject to this chapter whose act or process produces asbestos-containing waste material.

(52) "Waste shipment record" means the shipping document, required to be originated and signed by the waste generator, used to track and substantiate the disposition of asbestos-containing waste material.

(53) "Working day" means Monday through Friday and includes holidays that fall on any of the days Monday through Friday.

(C) Referenced materials. This chapter includes references to certain matter or materials. The text of the referenced materials is not included in the rules contained in this chapter. Information on the availability of the referenced materials as well as the date of, and/or the particular edition or version of the material is included in this rule. For materials subject to change, only the specific versions specified in this rule are referenced. Material is referenced as it exists on the effective date of this rule. Except for subsequent annual publication of existing (unmodified) Code of Federal Regulation compilations, any amendment or revision to a referenced document is not applicable unless and until this rule has been amended to specify the new dates..

(1) Availability. The referenced materials are available as follows:

(a) Code of Federal Regulations. Information and copies may be obtained by writing to: "Superintendent of Documents, Attn: New Orders, PO Box 371954, Pittsburgh, PA 15250-7954." The full text of the CFR is also available in electronic format at http://www.gpoaccess.gov/cfr/index.html. The CFR compilations are also available for inspection and copying at most public libraries and "The State Library of Ohio."

(b) Specifications of the "American Society for Testing and Materials." Information and copies may be obtained by writing to: "ASTM International, 100 Bar Harbor Drive, P.O. Box C700, West Conshohocken, Pennsylvania 19426-2959." These documents are available for purchase at www.astm.org. ASTM documents are also generally available at local public libraries and "The State Library of Ohio."

(c) "Standard Specifications for Construction of Roads and Bridges on Federal Highway Projects." Information and copies may be obtained by writing to: "Federal Highway Administration HFPD-3, 400 Seventh Street, SW, Washington D.C. 20590." The full text of the document is also available in electronic format at http://www.wfl.fhwa.dot.gov/design/specs/. The document is also available for inspection and copying at most public libraries and "The State Library of Ohio."

(2) Referenced materials.

(a) 29 CFR 1910.145(d)(4); "Specifications for accident prevention signs and tags;" as published in the July 1, 2011 Code of Federal Regulations.

(b) 40 CFR 61.154; "Standard for active waste disposal sites;" as published in the July 1, 2011 Code of Federal Regulations.

(c) 40 CFR Part 61, Appendix A; "National Emission Standards for Hazardous Air Pollutants Compliance Status Information Source Report;" 40 FR

48303, Oct. 14, 1975, as amended at 43 FR 8800, March 3, 1978 and 50 FR 46295, Sept. 9, 1985.

(d) 40 CFR Part 61, Subpart M; "National Emission Standards for Hazardous Air Pollutants;" 38 FR 8820, Apr. 6, 1973, as amended at 55 FR 48414, Nov. 20, 1990.

(e) 40 CFR Part 763; "Asbestos;" 52 FR 41846, Oct. 30, 1987.

(f) 40 CFR Part 763, Appendix E, Subpart E, Section 1; "Polarized Light Microscopy (PLM), Interim Method of the Determination of Asbestos in Bulk Insulation Samples;" 47 FR 23369, May 27, 1982 and 47 FR 38535, Sept. 1, 1982. Redesignated at 60 FR 31922, June 19, 1995.

(g) ASTM D737-75; "Test Method for Air Permeability of Textile Fabrics," originally approved 1975, as amended July 1, 2008.

(h) ASTM D2986-71, "Standard Test Method for Collection Efficiency of High Efficiency Particulate Air Filter;" approved 1971, as amended on Jan. 15, 1995 and Sept. 10, 1995; and reapproved in 1999.

(i) Section 401 of FP-03; "Standard Specifications for Construction of Roads and Bridges on Federal Highway Projects;" United States department of transportation, federal highway administration (FHWA); adopted 1985 (FP-85); revised 1996 (FP-96), 2003 (FP-03).

Effective: 07/18/2013

R.C. 119.032 review dates: 11/30/2016

CERTIFIED ELECTRONICALLY
Certification

07/08/2013
Date

Promulgated Under: 119.03
Statutory Authority: 3704.03(E)
Rule Amplifies: 3704.03(A), 3704.03(E)
Prior Effective Dates: 5/29/90, 11/18/02, 2/25/04, 2/2/07, 3/2/12

3745-20-02 **Standards for demolition and renovation, facility inspection, and determination of applicability.**

(A) Notwithstanding any other exclusion of this rule, and to determine which requirements of this rule and of rules 3745-20-03 and 3745-20-04 of the Administrative Code apply, each owner or operator of any demolition or renovation operation shall have the affected facility or part of the facility where a demolition or renovation operation will occur thoroughly inspected by a certified asbestos hazard evaluation specialist, in accordance with paragraph (C) of rule 3701-34-02 of the Administrative Code prior to the commencement of the demolition or renovation for the presence of asbestos, including category I and category II nonfriable asbestos-containing material.

Note: Inspections pursuant to paragraph (A) of this rule are subject to the Ohio department of health regulations under paragraph (C) of rule 3701-34-02 of the Administrative Code which states in part that no person shall identify, detect, or assess asbestos containing materials, [or] determine appropriate response actions unless he or she is certified as an asbestos hazard evaluation specialist by the director of the Ohio department of health in accordance with Chapter 3710. of the Revised Code.

(B) The requirements of rules 3745-20-03, 3745-20-04, and 3745-20-05 of the Administrative Code apply to each owner or operator of a demolition or renovation operation as follows:

(1) If the combined amount of regulated asbestos-containing material is at least two hundred sixty linear feet on pipes or at least one hundred sixty square feet on other facility components, or at least thirty-five cubic feet off facility components where the length or area could not be measured previously in a facility being demolished, all the requirements of rules 3745-20-03, 3745-20-04, and 3745-20-05 of the Administrative Code apply, except as provided in paragraph (B)(3) of this rule.

(2) If the combined amount of regulated asbestos-containing material is less than two hundred sixty linear feet on pipes and less than one hundred sixty square feet on other facility components, and less than thirty-five cubic feet off facility components where the length or area could not be measured previously or if there is no asbestos-containing material in a facility being demolished, only the notification requirements of paragraphs (A)(1), (A)(2), (A)(3)(a), and (A)(3)(d)(i) to (A)(3)(d)(iii), and (A)(4)(a) to (A)(4)(h), (A)(4)(m) and (A)(4)(n), and (D)(1) to (D)(3), and (E) of rule 3745-20-03 of the Administrative Code apply.

(3) If the operation is an emergency demolition, the requirements of paragraphs (A)(1), (A)(2), (A)(3)(c), (A)(4) {except (A)(4)(i)}, (B), and (C) of rule 3745-

20-03, and paragraphs (A)(4) to (A)(7), (B) and (D) of rule 3745-20-04, and rule 3745-20-05 of the Administrative Code apply.

(4) In a facility being renovated, including any individual nonscheduled renovation operation, all the requirements of rules 3745-20-03, 3745-20-04 and 3745-20-05 of the Administrative Code apply if the combined amount of regulated asbestos-containing material to be stripped, removed, dislodged, cut, drilled, or similarly disturbed is at least two hundred sixty linear feet on pipes or at least one hundred sixty square feet on other facility components, or at least thirty-five cubic feet off facility components where the length or area could not be measured previously.

(a) Paragraph (B)(4) of this rule applies to planned renovation operations involving a series of individual nonscheduled operations, that individually are exempt from this chapter, if the combined amount of regulated asbestos-containing material to be removed or striped during a calendar year, January first through December thirty-first, exceeds two hundred sixty linear feet on pipes or at least one hundred sixty square feet on other facility components or thirty-five cubic feet off facility components.

(b) Paragraph (B)(4) of this rule applies to emergency renovation operations if the combined amount of regulated asbestos-containing material to be removed or stripped as a result of the sudden, unexpected event that necessitated the renovation exceeds two hundred sixty linear feet on pipes or at least one hundred sixty square feet on facility components or thirty-five cubic feet off facility components.

R.C. 119.032 review dates: 11/30/2011 and 11/30/2016

CERTIFIED ELECTRONICALLY
Certification

11/30/2011
Date

Promulgated Under: 119.03
Statutory Authority: 3704.03(E)
Rule Amplifies: 3704.03(A), 3704.03(E)
Prior Effective Dates: 11/4/02, 2/2/07

3745-20-03 **Standard for notification prior to demolition or renovation.**

(A) Each owner or operator to whom this rule applies shall:

(1) Provide the director of Ohio EPA with written notice of intention to demolish or renovate.

(2) Delivery of the notice shall be by the United States postal service, commercial delivery service, or hand delivery. Update notice, as necessary, including when the amount of asbestos affected changes by at least twenty per cent.

(3) Postmark or deliver the notice to the Ohio EPA field office having jurisdiction in the county where the demolition or renovation is to occur as follows:

(a) At least ten working days before the beginning of any demolition operation, asbestos stripping or removal work, or any other activity including salvage activities and preparations that break up, dislodge or similarly disturb asbestos material if the operation is a demolition or renovation operation subject to this rule; or

(b) At least ten working days before the end of the calendar year preceding the year for which notice is being given for individual nonscheduled renovations described in paragraph (B)(4)(a) of rule 3745-20-02 of the Administrative Code; or

(c) As early as possible before, but not later than, the following working day if the operation is an emergency demolition, or if the operation is an emergency renovation;

(d) For asbestos stripping or removal work in any subject demolition or renovation operation (except for any nonscheduled renovation operations, emergency renovation operations and emergency demolition operations) that will begin on a date other than the one contained in the original notice, notice of the new start date must be provided to the director as follows:

(i) When the asbestos stripping or removal operation or demolition operation covered by this paragraph will begin after the date contained in the notice,

(a) Notify the Ohio EPA field office of the new start date by telephone as soon as possible before the original start date, and

(b) Postmark or deliver to the Ohio EPA field office a written notice of the new start date as soon as possible before, and no later than, the original start date. Delivery of the amended notice shall be by the

United States postal service, commercial delivery service, or hand delivery.

(ii) When the asbestos stripping or removal operation or demolition operation covered by this paragraph will begin on a date earlier than the original start date,

(a) Provide the Ohio EPA field office written notice of the new start date at least ten working days before asbestos stripping or removal work begins.

(b) For demolition covered by paragraph (B)(2) of rule 3745-20-02 of the Administrative Code, provide the Ohio EPA field office written notice of a new start date at least ten working days before commencement of demolition. Delivery of amended notice shall be by the United States postal service, commercial delivery service, or hand delivery.

(iii) In no event shall an operation covered by this paragraph begin on a date other than the date contained in the written notice of the new start date.

(4) Include the following information in the notice:

(a) An indication of whether the notice is the original or a revised notification;

(b) Name, address, and telephone number of the facility owner and of the facility operator;

(c) Name, address, telephone number, and Ohio asbestos hazard abatement contractor license number (if applicable) of the asbestos demolition or renovation operator;

(d) Location and street address (including building number or name and floor or room number, if appropriate), city, county, and state of the facility being demolished or renovated. Attach to the notification, any site plans, floor plans or other information that may be necessary to enable the operations to be located for inspection;

(e) Type of operation: demolition or renovation;

(f) Description of the facility or affected part of the facility including the size (square feet, and number of floors), age, and present and prior use of the facility;

(g) Estimate of the amount of regulated asbestos-containing material to be removed from the facility in terms of length of pipe in linear feet, surface

area in square feet on other facility components, or volume in cubic feet where the length or area cannot be measured. Also, estimate the approximate amount of category I and category II nonfriable asbestos-containing material in the affected part of the facility that will not be removed before demolition;

(h) Description of the procedures, including analytical methods, employed to detect the presence of and to estimate the quantity of regulated asbestos-containing material and category I and category II nonfriable asbestos-containing material in the facility;

(i) Scheduled starting and completion dates of asbestos removal work or any other activity, such as site preparation that would break up, dislodge, or similarly disturb asbestos material in the demolition or renovation; planned renovation operations involving individual nonscheduled operations shall only include the beginning and ending dates of the report period as described in paragraph (B)(4)(a) of rule 3745-20-02 of the Administrative Code;

(j) Description of the planned demolition or renovation work to be performed and method(s) to be employed including demolition or renovation techniques to be used and a description of affected facility components;

(k) Description of work practices and engineering controls to be used to comply with the requirements of this chapter, including asbestos removal and waste handling emission control procedures;

(l) Name and location of the waste disposal site where the asbestos-containing waste material will be deposited;

(m) Scheduled starting and completion dates of demolition or renovation;

(n) Description of procedures to be followed in the event that unexpected regulated asbestos-containing material is found or nonfriable asbestos-containing material becomes crumbled, pulverized, or reduced to powder;

(o) Name, address, and telephone number of the waste transporter;

(p) A certification that at least one person trained as required by paragraph (B) of rule 3745-20-04 of the Administrative Code will supervise the stripping and removal described by this notification.

(B) In addition to the information required in paragraph (A)(4) of this rule, each owner or operator of an emergency renovation operation shall supply the date and hour that the emergency occurred, a description of the sudden unexpected event, and an explanation of how the event caused an unsafe condition, or would cause equipment

damage or would pose an unreasonable financial burden if not immediately corrected.

(C) In addition to the information required in paragraph (A)(4) of this rule, each owner or operator of an emergency demolition shall provide the name, title, and authority of the state or local government authority who has ordered the demolition, the date that the order was issued, and the date on which the demolition is ordered to begin. A copy of the order shall be attached to the notification.

(D) Each owner or operator shall inform the appropriate Ohio EPA field office by telephone or facsimile concerning any of the following changes to information provided by the notice. An amended written notification shall be submitted to that office as soon as possible but not later than one working day following discovery of the change. The changes requiring amended written notification are:

(1) When the amount of regulated asbestos-containing material affected by the demolition or renovation operations changes by at least twenty per cent;

(2) Any deviation in the demolition or renovation schedule or in the methods to be used for asbestos removal or disposal;

(3) Any change in the owner or operator; and

(4) Any change in the name and location of the selected waste disposal site.

(E) All notifications required by this rule shall identify the name and title of the person submitting the notification, and shall be signed and dated by the person submitting the notification. The certification required in paragraph (A)(4)(p) of this rule shall acknowledge the existence of laws prohibiting the submission of false or misleading statements and shall certify that the facts contained in the notice are true, accurate and complete.

Effective: 03/02/2012

R.C. 119.032 review dates: 11/30/2011 and 11/30/2016

CERTIFIED ELECTRONICALLY
Certification

02/21/2012
Date

Promulgated Under: 119.03
Statutory Authority: 3704.03(E)
Rule Amplifies: 3704.03(A), 3704.03(E)
Prior Effective Dates: 5/29/90, 11/18/02, 2/2/07

3745-20-04 **Demolition and renovation procedures for asbestos emission control.**

(A) Each owner or operator of a demolition or renovation operation to whom this rule applies shall comply with the following procedures:

(1) Remove all regulated asbestos-containing material from a facility being demolished or renovated before any activity begins that would break up, dislodge, or similarly disturb the materials or preclude access to the materials for subsequent removal. However, regulated asbestos-containing material need not be removed before demolition, except in accordance with paragraph (E) of this rule, if:

(a) It is category I nonfriable asbestos-containing material that is not in poor condition and is not friable.

(b) It is on facility components that are encased in concrete or other similarly hard material, and the asbestos-containing materials are adequately wet whenever exposed during demolition.

(c) It was not accessible for testing and was, therefore, not discovered until after demolition began and, as a result of the demolition, the material cannot be safely removed. If not removed for safety reasons, the exposed regulated asbestos-containing material and any asbestos-contaminated debris must be treated as asbestos-containing waste material and adequately wet at all times until disposed of.

(d) It is category II nonfriable asbestos-containing material, and the probability is low the material will become crumbled, pulverized, or reduced to powder during demolition.

(2) When a facility component covered with, coated with or containing regulated asbestos-containing material is being taken out of the facility as units or in sections:

(a) Adequately wet all regulated asbestos-containing material exposed during cutting or disjointing operations; and

(b) Carefully lower the units or sections to the floor and to ground level not dropping, throwing, sliding or otherwise damaging or disturbing the regulated asbestos-containing material.

(3) Adequately wet regulated asbestos-containing materials when they are being stripped from facility components. In renovation operations, wetting that would

unavoidably damage equipment or cause an unreasonable safety hazard, is not required if the following conditions are met:

(a) The owner or operator submits a written request to Ohio EPA no less than thirty days prior to the starting date of such operations, asking the director to determine whether wetting to comply with this rule would unavoidably damage equipment or present an unreasonable safety hazard, and supplies the director with adequate information to make this determination; and

(b) The director issues a written determination that equipment damage or an unreasonable safety hazard would be unavoidable; and

(c) The owner or operator uses alternative emission controls in accordance with the terms of the determination. At a minimum the owner or operator shall use one of the following:

(i) A local exhaust ventilation and collection system designed and operated to capture the particulate asbestos materials produced by the stripping and removal of friable asbestos material. The system shall exhibit no visible emissions to the outside air or be designed and operated in accordance with the requirements in rule 3745-20-12 of the Administrative Code.

(ii) A glove-bag system designed and operated to contain the particulate asbestos material produced by the stripping of the asbestos materials.

(iii) Leak-tight wrapping to contain all regulated asbestos-containing material prior to dismantlement.

(d) In renovation operations where wetting would result in equipment damage or a safety hazard, and the methods allowed in paragraph (A)(3)(c) of this rule cannot be used, an alternate method may be used after obtaining written approval from the director based upon a determination that it is equivalent to wetting in controlling emissions. Requests for alternative emission control methods shall be submitted concurrently with the request contained in paragraph (A)(3)(a) of this rule.

(e) A copy of the director's written determination shall be displayed at the worksite during the renovation operation.

(4) After a facility component covered with, coated with or containing regulated asbestos-containing material has been taken out of the facility as a unit or in sections, pursuant to paragraph (A)(2) of this rule, except as provided in paragraph (A)(5) of this rule, either:

(a) Adequately wet the regulated asbestos-containing material during stripping; or

(b) During stripping, use a local exhaust ventilation and collection system operated to capture the particulate asbestos material produced by the stripping. The system must exhibit no visible emissions to the outside air or must be designed and operated in accordance with the requirements in rule 3745-20-12 of the Administrative Code; or

(c) Encase the regulated asbestos-containing material on the component with a suitable leak-tight container in accordance with rule 3745-20-05 of the Administrative Code. Regulated asbestos-containing material, contained in leak-tight wrapping, that has been removed in accordance with this paragraph need not be wetted.

(5) For large facility components such as reactor vessels, large tanks, and steam generators, but not beams (which must be handled in accordance with paragraphs (A)(2), (A)(3), and (A)(4) of this rule), the regulated asbestos-containing material is not required to be stripped if all of the following requirements are met:

(a) The component is removed, stored, transported, and either disposed of or reused without disturbing or damaging the regulated asbestos-containing material.

(b) The component is encased in a leak-tight wrapping.

(c) The leak-tight wrapping is labeled according to paragraph (D) of rule 3745-20-05 of the Administrative Code. Regulated asbestos-containing material, contained in leak-tight wrapping, that has been removed in accordance with this paragraph need not be wetted.

(6) For all regulated asbestos-containing material including material that has been removed or stripped:

(a) Adequately wet the materials and ensure that the materials remain adequately wet until collected and contained or treated in preparation for disposal in accordance with rule 3745-20-05 of the Administrative Code; and

(b) Carefully lower the materials to the ground or floor not dropping, throwing, sliding or otherwise damaging or disturbing the material;

(c) Transport the materials to the ground via leak-tight chutes, HEPA equipped vacuum transport system, or in leak-tight containers if the materials have

been removed or stripped more than fifty feet above ground level and were not removed as units or in sections.

(7) When the temperature at the point of wetting is below thirty-two degrees Fahrenheit:

(a) Comply with paragraphs (A)(4) and (A)(6) of this rule. The owner or operator need not comply with the other wetting requirements of this rule; and

(b) Use a local exhaust ventilation and collection system designed and operated to capture the particulate asbestos materials produced by the stripping and removal of friable asbestos material. The system shall exhibit no visible emissions; and

(c) Remove facility components coated or covered with regulated asbestos-containing material as units or sections to the maximum extent possible.

(d) During periods when wetting operations are suspended due to freezing temperatures, the owner or operator shall record the temperature in the area containing the facility components at the beginning, middle, and end of each operating day and keep daily temperature records available for inspection by the director or the director's representative during normal business hours at the demolition or renovation site. The owner or operator shall retain the temperature records for at least two years.

(B) No regulated asbestos-containing material shall be stripped, removed, or otherwise handled or disturbed at a facility regulated by this chapter unless all of the following provisions are met:

(1) At least one authorized representative, trained in the provisions of this chapter and the means of complying with them, is present at the location of operations.

(2) The training required in paragraph (B)(1) of this rule shall include, as a minimum, adequate training in the provisions of this chapter for:

(a) Definitions;

(b) Applicability (including facility inspection, asbestos material identification and classification);

(c) Notifications (including contents, delivery requirements and requirements to revise notices);

(d) Emission control procedures for removals (including, adequate wetting, encapsulation, removal of facility components in units or sections,

minimizing drop height, waste collection, local exhaust collection and ventilation systems, HEPA filters, negative pressure enclosures and glove-bag procedures);

(e) Waste disposal work practices (including at least wetting, containers, container labeling, vehicle marking, waste shipment records and transport requirements, waste disposal site requirements);

(f) Reporting and record keeping; and

(g) Asbestos hazards and worker protection.

(3) Every two years, the trained on-site authorized representative shall receive refresher training in the provisions of this chapter.

(4) Evidence that the required training has been completed shall be posted and made available for inspection by the director or the director's representative at the demolition or renovation site.

(C) Each owner or operator of any demolition or renovation operation, shall ensure all regulated asbestos-containing materials which have been damaged or made friable by demolition, renovation or adjacent stripping operations are repaired, encapsulated, or removed for disposal in accordance with rule 3745-20-05 of the Administrative Code, prior to the removal of emission controls.

(D) For emergency demolition operations, adequately wet the portion of the facility that contains regulated asbestos-containing material during the wrecking operation and ensure that the materials remain adequately wet until collected for disposal in accordance with rule 3745-20-05 of the Administrative Code.

(E) If a facility is demolished by intentional burning, or if demolition debris is to be burned, all regulated asbestos-containing material including category I and category II nonfriable asbestos-containing material must be removed in accordance with this chapter before burning.

Effective: 03/02/2012

R.C. 119.032 review dates: 11/30/2011 and 11/30/2016

CERTIFIED ELECTRONICALLY
Certification

02/21/2012
Date

Promulgated Under: 119.03
Statutory Authority: 3704.03(E)
Rule Amplifies: 3704.03(A), 3704.03(E)
Prior Effective Dates: 5/29/90, 11/18/02, 2/25/04, 2/2/07

3745-20-05 **Standard for asbestos waste handling.**

[Comment: For dates of non-regulatory government publications, publications of recognized organizations and associations, federal rules, and federal statutory provisions referenced in this rule, see paragraph (C) of rule 3745-20-01 of the Administrative Code titled "Referenced materials."]

(A) All asbestos-containing waste material shall be deposited as soon as is practical by the waste generator at:

(1) A waste disposal site in Ohio operated in accordance with the provisions of rule 3745-20-06 of the Administrative Code, or

(2) A waste disposal site not in Ohio operated in accordance with the provisions of 40 CFR 61.154, or

(3) A site that converts regulated asbestos-containing material and asbestos-containing waste material into nonasbestos (asbestos-free) material in accordance with the provisions of rule 3745-20-13 of the Administrative Code.

(4) The requirements of paragraph (A) of this rule do not apply to category I nonfriable ACM that is not RACM.

(B) Each owner or operator of any demolition, renovation, manufacturing, fabricating or spraying operation to whom this rule applies, shall discharge no visible emissions to the outside air during the collection, processing (including incineration), packaging, transporting, or deposition of any asbestos-containing waste material, and use one of the methods specified in paragraphs (B)(1) to (B)(4) of this rule:

(1) Adequately wet asbestos-containing waste material as follows:

(a) Mix control device asbestos waste to form a slurry; adequately wet other asbestos-containing waste material; and

(b) Discharge no visible emissions to the outside air from collecting, mixing, wetting, and handling operations, or use the methods specified by rule 3745-20-12 of the Administrative Code to clean emissions containing particulate asbestos material before they escape to, or are vented to, the outside air; and

(c) After wetting, seal all asbestos-containing waste material while wet in durable leak-tight containers or wrapping that complies with paragraph (C) of this rule.

(2) For facilities demolished in accordance with paragraph (A)(1) or (D) of rule 3745-20-04 of the Administrative Code, where asbestos was not removed prior to demolition, keep asbestos-containing waste material adequately wet at all times during and after demolition, and during handling, loading, transport and disposal at an active waste disposal site. Asbestos-containing waste materials covered by this paragraph shall either be sealed in leak-tight containers that comply with paragraph (C) of this rule or may be transported in bulk by leak-tight transport vehicles or containers that are securely covered or enclosed and cause no visible emissions.

(3) Process asbestos-containing waste material into nonfriable forms, as follows:

(a) Form all asbestos-containing waste material into nonfriable pellets or other shapes;

(b) Discharge no visible emissions to the outside air from collection and processing operations, including incineration, or use the method specified by rule 3745-20-12 of the Administrative Code to clean emissions containing particulate asbestos material before they escape to, or are vented to, the outside air.

(4) Use an alternative emission control and waste treatment method that has received prior approval by the director according to paragraph (A)(3) of rule 3745-20-04 of the Administrative Code.

(5) As applied to demolition and renovation, the requirements of paragraphs (B) and (C) of this rule do not apply to category I nonfriable asbestos-containing material waste and category II nonfriable asbestos-containing material waste that has not been crumbled, pulverized, or reduced to powder.

(C) Each waste generator shall ensure that asbestos waste containers shall meet the following minimum standards:

(1) All containers of asbestos-containing waste material and wrapped material shall be labeled, using permanent markings with letters of sufficient size and contrast so as to be readily visible and legible, as follows:

"DANGER
CONTAINS ASBESTOS FIBERS
AVOID CREATING DUST
CANCER AND LUNG DISEASE HAZARD

R.Q., ASBESTOS
CLASS 9
NA 2212, III"

For wrapped material or material to be transported off the facility site, label the containers or wrapped material with the name of the waste generator and the location at which the waste was generated.

(2) Asbestos-containing waste materials shall be sealed in plastic bags having a thickness of at least 0.006 inch (six-mils). A second clean, leak-tight plastic bag having a thickness of at least 0.006 inch (six-mils) shall fully contain the first bag; or

(3) A combination of a 0.006 inch (six-mils) plastic bag and a leak-tight steel, plastic, or fiber drum, or reinforced disposal box, leak-tight polypropylene woven fabric bag, or similar suitable and durable container. Drums shall be fitted with a matching lid and lock-rims, and boxes shall be banded and sealed with reinforced tape or in accordance with manufacturers recommendations; or

(4) Facility components removed in units or sections, or materials that will not fit into containers without additional breaking, shall be sealed with at least 0.012 inch (twelve mils) of leak-tight plastic or at least 0.010 inch (ten mils) of leak-tight polypropylene woven fabric; or

(5) Asbestos-containing waste materials, facility components, and contaminated debris may be disposed of using an alternative disposal system or may be processed into nonfriable forms using an alternative emission control and waste treatment system or method, which has received the prior written approval of the director.

(a) To obtain approval for an alternative asbestos waste disposal system or emission control and waste treatment method, the applicant must submit:

(i) Complete details regarding the reason that an alternative disposal system or emission control and waste treatment system or method is requested; and

(ii) The estimated quantity of materials to be disposed of or treated using this system or method; and

(iii) A description of the disposal system or treatment method and an operating plan describing the methods which are to be utilized to ensure that there are no visible emissions during the collection, treatment, transport and disposal of the asbestos-containing waste materials; and

(iv) The name(s) and address(es) of the waste disposal or treatment site(s) where the system will be utilized contingent upon the director's approval.

(b) Any owner or operator using an approved alternative waste disposal system or emission control and waste treatment method shall operate the system in accordance with the conditions of the director's approval.

(D) Each waste generator shall mark vehicles used to transport asbestos-containing waste material during the loading and unloading of waste so that the signs are visible.

(1) Display the following legend in the lower panel of a sign which conforms to the requirements for twenty inch by fourteen inch upright sign specified in 29 CFR 1910.145(d)(4):

"DANGER
ASBESTOS DUST HAZARD
CANCER AND LUNG DISEASE
HAZARD
Authorized Personnel Only"

(2) In the legend use letter sizes and styles of a visibility at least equal to the following specifications: one inch sans serif, gothic or block, in the first and second line; and at least three-fourths inches sans serif, gothic or block, in the third line; and fourteen point gothic in the fourth line. Spacing between any two lines must be at least equal to the height of the upper of the two lines.

(E) For all asbestos-containing waste material transported off the facility site, each waste generator and owner or operator of a waste disposal site shall maintain waste shipment records. The waste shipment record shall be legible, complete, signed and dated by the waste generator and waste disposal site operator as follows:

(1) The waste shipment record shall include the following information:

(a) The name of the work site or facility where the asbestos-containing waste was generated, the mailing address, and telephone number of the facility owner.

(b) The name, mailing address and telephone number of the owner or operator (waste generator) responsible for handling, packing, marking and labeling the asbestos-containing waste material.

(c) The name, mailing address, telephone number and site location of the active waste disposal site designated by the generator to receive the asbestos-containing waste material for disposal.

(d) The name and address of the local, state or USEPA regional agency responsible for administering the asbestos NESHAP program.

(e) A description of the asbestos-containing waste materials included in the waste shipment.

(f) The number and type of containers included in the waste shipment.

(g) The approximate volume of asbestos-containing waste material included in the waste shipment in cubic yards.

(h) Special handling instructions or additional information relative to the waste shipment the waste generator may specify.

(i) A certification that the contents of this consignment are fully and accurately described by proper shipping name and are classified, packed, marked, and labeled, and are in all respects in proper condition for transport by highway according to applicable international and government regulations.

(j) The name, address and telephone number of the transporter.

(k) A signature by the transporter to acknowledge receipt of the asbestos-containing waste shipment described by the waste generator in paragraphs (E)(1)(a) to (E)(1)(i) of this rule.

(l) A discrepancy indication space to be completed by the owner or operator of the waste disposal site if any improperly contained asbestos waste is observed or if there is any discrepancy in the quantity of asbestos shipped and the quantity of asbestos waste received at the asbestos waste disposal site.

(m) A signature by the waste disposal site owner or operator to acknowledge receipt of the asbestos-containing waste shipment described by the waste generator in paragraphs (E)(1)(a) to (E)(1)(i) of this rule except as noted in the discrepancy indication space.

(2) The waste generator and the owner or operator of the waste disposal site shall conform to the following procedures:

(a) Before releasing the waste shipment for off-site disposal the waste generator shall complete the information required by paragraphs (E)(1)(a) to (E)(1)(h) of this rule, and sign and date on the date of shipment, the certification required by paragraph (E)(1)(i) of this rule.

(b) Upon receiving the waste shipment the waste disposal site operator shall:

(i) Sign and date the waste shipment record making note of any improperly contained asbestos-containing waste material or any discrepancy in the quantity or waste received on the discrepancy indication space and

provide a copy of the waste shipment record to the transporter for the transporter's receipt and records.

(ii) As soon as possible and no longer than thirty days after receipt of the waste, send the original completed copy of the signed waste shipment record to the waste generator and retain the remaining copy for the waste disposal site record.

(iii) Upon discovering a discrepancy between the quantity of waste designated on the waste shipment records and the quantity actually received, attempt to reconcile the discrepancy with the waste generator. If the discrepancy is not resolved within fifteen days after receiving the waste, immediately report the discrepancy in writing to the local, state, or USEPA regional office responsible for administering the asbestos NESHAP program for the waste generator, and, if different, the local, state, or USEPA regional office responsible for administering the asbestos NESHAP program for the disposal site. Describe the discrepancy and attempts to reconcile it, and submit a copy of the waste shipment record along with the report to Ohio EPA.

(3) When the waste generator does not receive a completed waste shipment record signed by the owner or operator of the designated disposal site, within thirty-five days of the date the waste was accepted by the initial transporter, the waste generator shall contact the transporter and/or the owner or operator of the designated disposal site to determine the status of the waste shipment.

(4) The waste generator shall report in writing to the Ohio EPA field office where notification was submitted if a copy of the waste shipment record, signed by the owner or operator of the designated waste disposal site, is not received by the waste generator within forty-five days of the date the waste was accepted by the initial transporter. Include in the report the following information:

(a) A copy of the waste shipment record for which a confirmation of delivery was not received; and

(b) A cover letter signed by the waste generator explaining the efforts taken to locate the asbestos waste shipment and the results of those efforts.

(5) The waste generator and waste disposal site owner or operator, shall retain a copy of all waste shipment records for at least two years.

(F) Each waste generator or facility owner shall furnish upon request, and make available for inspection by the director or the director's representative, all records required to be maintained under this rule.

(G) When removing or transporting asbestos-containing waste material to a disposal site, each owner or operator of any demolition or renovation operation to whom this rule applies shall prepare and secure any load of asbestos-containing waste material in a manner that prevents any visible emissions, load loss, and spillage or leakage of liquids.

Effective: 03/02/2012

R.C. 119.032 review dates: 11/30/2011 and 11/30/2016

CERTIFIED ELECTRONICALLY
Certification

02/21/2012
Date

Promulgated Under: 119.03
Statutory Authority: 3704.03(E)
Rule Amplifies: 3704.03(A), 3704.03(E)
Prior Effective Dates: 5/29/90, 11/18/02, 2/2/07

3745-20-06 **Standard for active asbestos waste disposal sites.**

(A) Each owner or operator of an active asbestos waste disposal site shall cause or permit no visible emissions to the outside air; or shall comply with the requirements of paragraph (B) of this rule.

(B) Rather than meet the no visible emissions requirement of paragraph (A) of this rule, each owner or operator of an active asbestos waste disposal site that receives waste that contains asbestos-containing material shall comply with the following:

(1) There shall be no visible emissions to the outside air from asbestos-containing waste materials during the on-site transportation, transfer, deposition or compacting operations.

(2) Deposition and burial operations shall be conducted in a manner which prevents handling by equipment or persons that causes asbestos-containing waste materials to be broken-up or dispersed before the materials are buried.

(3) As soon as practicable after deposition of the asbestos-containing waste materials but no later than at the end of each operating day, the asbestos-containing waste material deposited at the site during the operating day shall be covered with at least twelve inches of compacted nonasbestos-containing material. Alternatively, an owner or operator of an active waste disposal site may apply for approval of the director to utilize alternative control methods to bind dust, control wind erosion or convert asbestos to nonfriable forms.

(4) During the unloading, deposition, burial and initial compaction of asbestos-containing waste materials, the owner or operator of the active waste disposal site shall establish a restricted area adequate to deter the unauthorized entry of the general public and any unauthorized personnel from any location within one hundred feet of the operations; and

(5) Shall display the following information on a sign not less than twenty by fourteen inches, so that it is visible at all entrances and at intervals of three hundred feet or less along the property line or fencing immediately surrounding the restricted area using letter sizes and styles of a visibility at least equal to the following specifications: one inch sans serif, gothic or block in the first and second line; and at least three-fourths inches sans serif, gothic or block in the third line; and fourteen point gothic in the fourth line. Spacing between any two lines must be at least equal to the height of the upper of the two lines:

--

"ASBESTOS WASTE DISPOSAL SITE
DO NOT CREATE DUST
BREATHING ASBESTOS IS

HAZARDOUS TO YOUR HEALTH"

(C) For all asbestos-containing waste material received, the owner or operator of the active waste disposal site shall:

(1) Maintain waste shipment records, in accordance with paragraph (E) of rule 3745-20-05 of the Administrative Code.

(2) Maintain until closure records of the location, depth, area, and quantity in cubic yards of asbestos-containing waste material within the disposal site on a map or diagram of the disposal area.

(3) Retain a copy of all other records and reports required by this chapter for at least two years.

(D) The owner or operator of the active waste disposal site shall furnish all records required under this rule upon request and make them available during normal business hours for inspection by the director or the director's representative.

(E) Upon closure of the facility, the owner or operator of the active waste disposal site shall comply with all the provisions of rule 3745-20-07 of the Administrative Code and shall submit a copy of the records of the asbestos waste disposal locations and quantities to the director.

(F) The owner or operator of the active waste disposal site shall notify the director in writing at least forty-five days prior to excavating or otherwise disturbing any asbestos-containing waste material that has been deposited at a waste disposal site and covered. If the excavation will begin on a date other than the one contained in the original notice, provide notice of the new start date to the director at least ten working days before excavation begins. In no event shall excavation begin earlier than the date specified in the original notification. Include the following information in the notice:

(1) Scheduled starting and completion dates.

(2) Reason for disturbing the waste.

(3) Procedures to be used to control emissions during the excavation, storage, transport, and ultimate disposal of the excavated asbestos-containing waste material. If deemed necessary, the director may require changes in the emission control procedures to be used.

(4) Location of any temporary storage site and the final disposal site.

Effective: 03/02/2012

R.C. 119.032 review dates: 11/30/2011 and 11/30/2016

CERTIFIED ELECTRONICALLY
Certification

02/21/2012
Date

Promulgated Under: 119.03
Statutory Authority: 3704.03(E)
Rule Amplifies: 3704.03(A), 3704.03(E)
Prior Effective Dates: 11/18/02, 2/2/07

3745-20-07 **Standard for inactive asbestos waste disposal sites.**

[Comment: For dates of non-regulatory government publications, publications of recognized organizations and associations, federal rules, and federal statutory provisions referenced in this rule, see paragraph (C) of rule 3745-20-01 of the Administrative Code titled "Referenced materials."]

(A) Each owner or operator of an inactive asbestos waste disposal site shall either:

(1) Discharge no visible emissions to the outside air from an inactive asbestos waste disposal site; or

(2) Cover the asbestos-containing waste material with at least six inches of compacted nonasbestos-containing material, and grow and maintain a cover of vegetation on the area adequate to prevent exposure of the asbestos-containing waste material; or

(3) Cover the asbestos-containing waste material with at least two feet of compacted nonasbestos-containing material, and maintain the cover to prevent exposure of the asbestos-containing waste material.

(B) Unless a natural barrier adequately deters access by the general public, each owner or operator of an inactive asbestos waste disposal site shall install and maintain warning signs and fencing as follows, or comply with paragraph (A)(2) or (A)(3) of this rule.

(1) Display warning signs at all entrances and at intervals of three hundred feet or less along the property line of the site or along the perimeter of the sections of the site where asbestos-containing waste material was deposited. The warning signs must:

(a) Be posted in such a manner and location that a person can easily read the legend; and

(b) Conform to the requirements for a twenty inch by fourteen inch upright format warning sign and display the following legend in the lower panel with letter sizes of at least one inch sans serif, gothic or block. Spacing between any two lines must be at least equal to the height of the upper of the two lines:

"ASBESTOS WASTE DISPOSAL SITE
DO NOT CREATE DUST
BREATHING ASBESTOS IS HAZARDOUS TO
YOUR HEALTH"

(2) Fence the perimeter of the site in a manner adequate to deter access by the general public.

(3) Upon request and submission of appropriate information, the director will determine whether a fence or a natural barrier adequately deters access by the public.

(4) When requesting a determination on whether a natural barrier adequately deters public access, supply information enabling the director to determine whether a fence or a natural barrier adequately deters access by the general public.

(C) The owner or operator may use an alternative control method that has received prior approval of the director rather than comply with the requirements of paragraph (A) or (B) of this rule.

(D) Each owner or operator of an inactive asbestos waste disposal site shall notify the director in writing at least forty-five days prior to excavating or otherwise disturbing or removing any asbestos-containing waste material. If the excavation will begin on a date other than the one contained in the original notice, notice of the new start date must be provided to the director at least ten working days before excavation begins. In no event shall excavation begin earlier than the date specified in the original notification. Each owner or operator shall include the following information in the notice:

(1) Scheduled starting and completion dates.

(2) Reason for disturbing the waste.

(3) Procedures to be used to control emissions during the excavation, storage, transport, and ultimate disposal of the excavated asbestos-containing waste material. If deemed necessary, the director may requires changes in the emission control procedures to be used.

(4) Location of any temporary storage site including names and address(es) and the final disposal site.

(E) Within sixty days of a site becoming inactive and after November 20, 1990, record a notation of the presence of asbestos-containing waste material on the deed to the facility property and on any other instrument that would normally be examined during a title search; this notation will, in perpetuity, notify any potential purchaser of the property that:

(1) The land has been used for the disposal of asbestos-containing waste material; and

(2) The survey plot and record of the location and quantity of asbestos-containing waste disposed of within the disposal site required in paragraph (C)(2) of rule 3745-20-06 of the Administrative Code has been filed with the director; and

(3) The site is subject to this chapter and 40 CFR Part 61, Subpart M.

Effective: 03/02/2012

R.C. 119.032 review dates: 11/30/2011 and 11/30/2016

CERTIFIED ELECTRONICALLY
Certification

02/21/2012
Date

Promulgated Under: 119.03
Statutory Authority: 3704.03(E)
Rule Amplifies: 3704.03(A), 3704.03(E)
Prior Effective Dates: 5/29/90, 11/18/02, 2/2/07

3745-20-08 **Reporting, certification and permit application requirements.**

[Comment: For dates of non-regulatory government publications, publications of recognized organizations and associations, federal rules, and federal statutory provisions referenced in this rule, see paragraph (C) of rule 3745-20-01 of the Administrative Code titled "Referenced materials."]

(A) Any owner or operator of a new source to which this chapter applies with the exception of sources subject to rules 3745-20-04 (demolition and renovation), 3745-20-09 (roadways), 3745-20-14 (insulating), and 3745-20-15 (spraying) of the Administrative Code, and which has an initial start up date preceding November 20, 1990, was required to provide the following information to the director postmarked or delivered by February 18, 1991. In the case of a new source that does not have an initial start up date preceding November 20, 1990, the information shall be provided by the owner or operator, postmarked or delivered, within ninety days of the initial start up date of that source. Any owner or operator of an existing source was required to provide the following information to the director within ninety days of November 20, 1990, unless the owner or operator of the existing source has previously provided this information to the director:

(1) A description of the emission control equipment used for each process; and

(2) If a fabric filter device is used to control emissions,

(a) The airflow permeability in cubic feet per minute per square foot if the fabric filter device uses a woven fabric, and, if the fabric is synthetic, whether the fill yarn is spun or not spun; and

(b) The density in ounces per square yard, the minimum thickness in inches, and the airflow permeability in cubic feet per minute per square foot, if the fabric filter device uses a felted fabric.

(3) If a HEPA filter is used to control emissions, the certified efficiency.

(4) For asbestos waste disposal handling sources subject to rule 3745-20-05 of the Administrative Code:

(a) A brief description of each process that generates asbestos-containing waste material; and

(b) The average volume of asbestos-containing waste material disposed of, measured in cubic yards per day; and

(c) The emission control methods used in all stages of waste disposal; and

(d) The type of disposal site or treatment site used for ultimate disposal, the name of the site operator, and the name and location of the disposal site.

(5) For active waste disposal and inactive waste disposal sites subject to rules 3745-20-06 and 3745-20-07 of the Administrative Code:

(a) A brief description of the site; and

(b) The method or methods used to comply with the standard, or alternative procedures to be used.

(B) Any changes in the information provided for paragraph (A) of this rule by any existing source shall be provided to the director, postmarked or delivered, within thirty days after the change.

(C) All owners and operators of sources except roadways, demolition and renovation, spraying, and insulating materials shall comply with this paragraph. In addition to the information required in paragraph (A) of this rule, the owner or operator of each existing source or each new source which had an initial start up before the effective date of this rule shall provide the following information in writing to the director within ninety days after the effective date of this rule. The information described in this rule must be reported using the format provided in 40 CFR Part 61, Appendix A:

(1) Name and address of the owner or operator.

(2) The location of the source.

(3) The type of hazardous air pollutants potentially emitted by the stationary source.

(4) A brief description of the nature, size, design, and method of operation of the stationary source including the operating design capacity of the source. The description must identify each point or fugitive source of emission for each hazardous air pollutant.

(5) The average weight per month of the hazardous materials being processed by the source over the last twelve months preceding the date of the report.

(6) A description of the existing control equipment for each emission point including:

(a) Each control device for each hazardous air pollutant; and

(b) Estimated control efficiency (per cent) for each control device.

(7) A statement by the owner or operator of the source as to whether the source can comply with the standards within ninety days after the effective date.

(D) Any changes in the information provided for paragraph (C) of this rule by any existing source shall be provided to the director, postmarked or delivered, within thirty days after the change.

(E) No person shall install or operate a new source regulated under rule 3745-20-06, 3745-20-10, 3745-20-11, or 3745-20-13 of the Administrative Code unless the owner or operator applies for and obtains from the Ohio EPA a permit-to-install and operate pursuant to Chapter 3745-31 of the Administrative Code; or, a permit-to-install pursuant to Chapter 3745-31 of the Administrative Code and a permit-to-operate pursuant to Chapter 3745-77 of the Administrative Code, as applicable.

Effective: 03/02/2012

R.C. 119.032 review dates: 11/30/2011 and 11/30/2016

CERTIFIED ELECTRONICALLY
Certification

02/21/2012
Date

Promulgated Under: 119.03
Statutory Authority: 3704.03(E)
Rule Amplifies: 3704.03(A), 3704.03(E)
Prior Effective Dates: 5/29/90, 11/18/02, 2/25/04, 2/2/07

3745-20-09 **Standard for roadways.**

[Comment: For dates of non-regulatory government publications, publications of recognized organizations and associations, federal rules, and federal statutory provisions referenced in this rule, see paragraph (C) of rule 3745-20-01 of the Administrative Code titled "Referenced materials."]

No person may construct or maintain a roadway with asbestos tailings or asbestos-containing waste material on that roadway, unless, for asbestos tailings:

(A) It is a temporary roadway on an area of asbestos ore deposits (asbestos mine); or

(B) It is a temporary roadway at an active asbestos mill site and is encapsulated with a resinous or bituminous binder. The encapsulated road surface must be maintained at a minimum frequency of once per year to prevent dust emissions; or

(C) It is encapsulated in asphalt concrete meeting the United States department of transportation, federal highway administration specifications contained in Section 401 of FP-03; "Standard Specifications for Construction of Roads and Bridges on Federal Highway Projects," or their equivalent.

Effective: 03/02/2012

R.C. 119.032 review dates: 11/30/2011 and 11/30/2016

CERTIFIED ELECTRONICALLY
Certification

02/21/2012
Date

Promulgated Under: 119.03
Statutory Authority: 3704.03(E)
Rule Amplifies: 3704.03(A), 3704.03(E)
Prior Effective Dates: 11/18/02, 2/2/07

3745-20-10 **Standards for asbestos mills and manufacturing.**

(A) This standard applies to asbestos mills and to the following manufacturing operations using commercial asbestos:

(1) The manufacture of cloth, cord, wicks, tubing, tape, twine, rope, thread, yarn, roving, lap, or other textile materials.

(2) The manufacture of cement products.

(3) The manufacture of fireproofing and insulating materials.

(4) The manufacture of friction products.

(5) The manufacture of paper, millboard, and felt.

(6) The manufacture of floor tile.

(7) The manufacture of paints, coatings, caulks, adhesives, and sealants.

(8) The manufacture of plastics and rubber materials.

(9) The manufacture of chlorine utilizing asbestos diaphragm technology.

(10) The manufacture of shotgun shell wads.

(11) The manufacture of asphalt concrete.

(B) Each owner or operator of an asbestos mill or any of the asbestos manufacturing operations to which this rule applies shall either:

(1) Discharge no visible emissions to the outside air from these operations or from any building or structure in which they are conducted or from any other fugitive sources; or

(2) Use the methods specified by rule 3745-20-12 of the Administrative Code to clean emissions from these operations containing particulate asbestos material before they escape to, or are vented to, the outside air; or

(3) Monitor each potential source of asbestos emissions from any part of the manufacturing facility, including air cleaning devices, process equipment, and buildings housing material processing and handling equipment, at least once on each day of operation, during daylight hours for visible emissions to the outside air during periods of operation. The monitoring shall be by visual observation of at least fifteen seconds duration per source of emissions; or

(4) Inspect each air cleaning device at least once each week for proper operation and for changes that signal the potential for malfunctions to the maximum extent possible without dismantling other than opening the device, including the presence of tears, holes, and abrasions in filter bags and for dust deposits on the clean side of bags. For air cleaning devices that cannot be inspected on a weekly basis according to this paragraph, submit to the Ohio EPA field office, and revise as necessary, a written maintenance plan to include, at a minimum, the following; or

(a) Maintenance schedule.

(b) Recordkeeping plan.

(5) Maintain records of the results of visible emission monitoring and air cleaning device inspections using a form with the following information; or

(a) Date and time of each inspection.

(b) Presence or absence of visible emissions.

(c) Condition of fabric filters, including presence of any tears, holes and abrasions.

(d) Presence of dust deposits on clean side of fabric filters.

(e) Brief description of corrective actions taken, including date and time.

(f) Daily hours of operation for each air cleaning device.

(6) Furnish upon request, and make available at the affected facility during normal business hours for inspection by the director or the director's representative, all records required under this rule; or

(7) Retain a copy of all monitoring and inspection records for at least two years; or

(8) Submit semiannually a copy of the visible emission monitoring records to the Ohio EPA field office if visible emissions occurred during the report period. Semiannual reports shall be postmarked by the thirtieth day following the end of the six-month period.

Effective: 03/02/2012

R.C. 119.032 review dates: 11/30/2011 and 11/30/2016

CERTIFIED ELECTRONICALLY
Certification

02/21/2012
Date

Promulgated Under: 119.03
Statutory Authority: 3704.03(E)
Rule Amplifies: 3704.03(A), 3704.03(E)
Prior Effective Dates: 11/18/02, 2/2/07

3745-20-11 **Standard for fabricating.**

(A) This rule applies to the following fabricating operations using commercial asbestos:

(1) The fabrication of cement building products.

(2) The fabrication of friction products except those operations that primarily install asbestos friction materials on motor vehicles.

(3) The fabrication of cement or silicate board for ventilation hoods; ovens; electrical panels; laboratory furniture, bulkheads, partitions, and ceilings for marine construction; and flow control devices for the molten metal industry.

(B) Each owner or operator of any of the fabricating operations to which this rule applies shall either:

(1) Discharge no visible emissions to the outside air from any of the operations, or from any building or structure in which they are conducted, or from any other fugitive sources; or

(2) Use the methods specified by rule 3745-20-12 of the Administrative Code to clean emissions containing particulate asbestos material before they escape to, or are vented to, the outside air; or

(3) Monitor each potential source of asbestos emissions from any part of the fabricating facility, including air cleaning devices, process equipment, and buildings that house equipment for material processing and handling, at least once each day of operation, during daylight hours, for visible emissions to the outside air during periods of operation. The monitoring shall be by visual observation of at least fifteen seconds duration per source of emissions; or

(4) Inspect each air cleaning device to the maximum extent possible without dismantling other than opening the device at least once each week for proper operation and for changes that signal the potential for malfunctions, including the presence of tears, holes, and abrasions in filter bags and for dust deposits on the clean side of bags. For air cleaning devices that cannot be inspected on a weekly basis according to this paragraph, submit to the Ohio EPA field office, and revise as necessary, a written maintenance plan to include, at a minimum, the following:

(a) Maintenance schedule.

(b) Recordkeeping plan.

(5) Maintain records of the results of daily visible emission monitoring and weekly air cleaning device inspections, and include the following information:

(a) Date and time of each inspection.

(b) Presence or absence of visible emissions.

(c) Condition of fabric filters, including presence of any tears, holes, and abrasions.

(d) Presence of dust deposits on clean side of fabric filters.

(e) Brief description of corrective actions taken, including date and time.

(f) Daily hours of operation for each air cleaning device.

(6) Furnish upon request and make available at the affected facility during normal business hours for inspection by the director or the director's representative, all records required under this rule.

(7) Retain a copy of all monitoring and inspection records for at least two years.

(8) Submit semiannually a copy of the visible emission monitoring records to the Ohio EPA field office if visible emissions occurred during the report period. Semiannual reports shall be postmarked by the thirtieth day following the end of the six-month period.

Effective: 03/02/2012

R.C. 119.032 review dates: 11/30/2011 and 11/30/2016

CERTIFIED ELECTRONICALLY
Certification

02/21/2012
Date

Promulgated Under: 119.03
Statutory Authority: 3704.03(E)
Rule Amplifies: 3704.03(A), 3704.03(E)
Prior Effective Dates: 11/18/02, 2/2/07

3745-20-12 **Air cleaning.**

[Comment: For dates of non-regulatory government publications, publications of recognized organizations and associations, federal rules, and federal statutory provisions referenced in this rule, see paragraph (C) of rule 3745-20-01 of the Administrative Code titled"Referenced materials."]

(A) The owner or operator who uses air cleaning, as specified in this chapter of the Administrative Code shall:

(1) Use fabric filter collection devices, except as noted in paragraph (B) of this rule, as follows:

(a) Ensure that the airflow permeability, as determined by ASTM D737-75, does not exceed thirty cubic feet per minute per square foot for woven fabrics or thirty-five cubic feet per minute per square foot for felted fabrics, except that forty cubic feet per minute per square foot for woven and forty-five cubic feet per minute per square foot for felted fabrics is allowed for filtering air from asbestos ore dryers; and

(b) Ensure that felted fabric weighs at least fourteen ounces per square yard and is at least one-sixteenth inch thick throughout; and

(c) Avoid the use of synthetic fabrics that contain fill yarn other than that which is spun.

(2) Properly install, use, operate, and maintain all air-cleaning equipment authorized by this rule. Bypass devices may be used only during upset or emergency conditions and then only for so long as it takes to shut down the operation generating the particulate asbestos material.

(3) For fabric filter collection devices installed after January 10, 1989, provide for easy inspection for faulty bags.

(B) There are the following exceptions to paragraph (A)(1) of this rule:

(1) If the use of fabric creates a fire or explosion hazard, or if the director determines that a fabric filter is not feasible, the director may authorize as a substitute the use of wet collectors designed to operate with a unit contacting energy of at least forty inches water gauge pressure.

(2) Use a HEPA filter that is manufacturer certified to be at least 99.97 per cent efficient for 0.3 micron particles.

(3) The director may authorize the use of filtering equipment other than described in paragraphs (A)(1), (B)(1) and (B)(2) of this rule if the owner or operator demonstrates to the director's satisfaction that it is equivalent to the described equipment in filtering particulate asbestos material.

Effective: 03/02/2012

R.C. 119.032 review dates: 11/30/2011 and 11/30/2016

CERTIFIED ELECTRONICALLY
Certification

02/21/2012
Date

Promulgated Under: 119.03
Statutory Authority: 3704.03(E)
Rule Amplifies: 3704.03(A), 3704.03(E)
Prior Effective Dates: 11/18/02, 2/2/07

3745-20-13 **Standard for operations that convert asbestos-containing waste material into nonasbestos (asbestos-free) material.**

(A) Each owner or operator of an operation that converts regulated asbestos-containing material and asbestos-containing waste material into nonasbestos (asbestos-free) material shall obtain from the director a permit-to-install and operate pursuant to Chapter 3745-31 of the Administrative Code; or, a permit-to-install pursuant to Chapter 3745-31 of the Administrative Code and a permit-to-operate pursuant to Chapter 3745-77 of the Administrative Code, as applicable.

(1) To obtain a permit-to-install or a permit-to-install and operate, the owner or operator shall submit a completed application in accordance with Chapter 3745-31 of the Administrative Code, and provide the director with the following information:

(a) Description of waste feed handling and temporary storage.

(b) Description of process operating conditions.

(c) Description of the handling and temporary storage of the end product.

(d) Description of the protocol to be followed when analyzing output materials by transmission electron microscopy.

(e) Performance test protocol, including provisions for obtaining information required under paragraph (A)(2) of this rule.

(f) The director may require that a demonstration of the process be performed prior to issuing the permit to install.

(2) Prior to being issued a a permit-to-install and operate pursuant to Chapter 3745-31 of the Administrative Code or a permit-to-operate pursuant to Chapter 3745-77 of the Administrative Code, the owner or operator shall conduct a start-up performance test. Test results shall include:

(a) A detailed description of the types and quantities of nonasbestos material, regulated asbestos-containing material, and asbestos-containing waste material processed, including but not limited to asbestos cement products, friable asbestos insulation, plaster, wood, plastic, wire, etc. Test feed is to include the full range of materials that will be encountered in actual operation of the process.

(b) Results of analyses, using polarized light microscopy, that document the asbestos content of the wastes processed.

(c) Results of analyses, using transmission electron microscopy, that document that the output materials are free of asbestos. Samples for analysis are to be collected as eight-hour composite samples (one two hundred gram (seven ounce) sample per hour), beginning with the initial introduction of regulated asbestos-containing material or asbestos-containing waste material and continuing until the end of the performance test.

(d) A description of operating parameters, such as temperature and residence time, defining the full range over which the process is expected to operate to produce nonasbestos (asbestos-free) materials. Specify the limits for each operating parameter within which the process will produce nonasbestos (asbestos-free) materials.

(e) The length of the test.

(B) During the initial ninety days of operation, each owner or operator of an operation that converts regulated asbestos-containing material and asbestos-containing waste material into nonasbestos (asbestos-free) material, shall:

(1) Continuously monitor and log the operating parameters identified during start-up performance tests that are intended to ensure the production of nonasbestos (asbestos-free) output material.

(2) Monitor input materials to ensure that they are consistent with the test feed materials described during start-up performance tests in paragraph (A)(2)(a) of this rule.

(3) Collect and analyze samples, taken as ten-day composite samples (one two hundred gram (seven ounce) sample collected every eight hours of operation) of all output material for the presence of asbestos. Composite samples may be for fewer than ten days. Transmission electron microscopy (TEM) shall be used to analyze the output material for the presence of asbestos. During the initial ninety-day period, all output materials must be stored on-site until analysis shows the material to be asbestos-free or disposed of as asbestos-containing waste material in accordance with rule 3745-20-05 of the Administrative Code.

(C) After the initial ninety days of operation each owner or operator of an operation that converts regulated asbestos-containing material and asbestos-containing waste material into nonasbestos (asbestos-free) material shall:

(1) Continuously monitor and record the operating parameters identified during start-up performance testing and any subsequent performance testing.

(2) Continuously monitor any output produced during a period of deviation from the range of operating conditions established to ensure the production of nonasbestos (asbestos-free) material.

(3) Output materials shall be:

(a) Disposed of as asbestos-containing waste material according to rule 3745-20-05 of the Administrative Code, or

(b) Recycled as waste feed during process operation within the established range of operating conditions, or

(c) Stored temporarily on-site in a leak-tight container until analyzed for asbestos content. Any product material that is not asbestos-free shall be either disposed of as asbestos-containing waste material or recycled as waste feed to the process.

(4) Collect and analyze monthly composite samples (one two hundred gram (seven ounce) sample collected every eight hours of operation) of the output material. Transmission electron microscopy shall be used to analyze the output material for the presence of asbestos.

(D) Each owner or operator of an operation that converts regulated asbestos-containing material and asbestos-containing waste material into nonasbestos (asbestos-free) material shall discharge no visible emissions to the outside air from any part of the operation, or use the methods specified by rule 3745-20-12 of the Administrative Code to clean emissions containing particulate asbestos material before they escape to, or are vented to, the outside air.

(E) Each owner or operator of an operation that converts regulated asbestos-containing material and asbestos-containing waste material into nonasbestos (asbestos-free) material shall maintain records on-site and include the following information:

(1) Results of start-up performance testing and all subsequent performance testing, including operating parameters, feed characteristic, and analyses of output materials;

(2) Results of the composite analyses required during the initial ninety days of operation under paragraph (B) of this rule;

(3) Results of the monthly composite analyses required under paragraph (C) of this rule;

(4) Results of continuous monitoring and logs of process operating parameters required under paragraphs (B) and (C) of this rule;

(5) The information on waste shipments received as required in paragraph (B) of rule 3745-20-06 of the Administrative Code;

(6) For output materials where no analyses were performed to determine the presence of asbestos, record the name and location of the purchaser or disposal site to which the output materials were sold or deposited, and the date of sale or disposal;

(7) Retain records required by this rule for at least two years.

(F) Each owner or operator of an operation that converts regulated asbestos-containing material and asbestos-containing waste material into nonasbestos (asbestos-free) material shall submit the following reports to the director:

(1) A report for each analysis of product composite samples performed during the initial ninety days of operation.

(2) A quarterly report, including the following information concerning activities during each consecutive three-month period:

(a) Results of analyses of monthly product composite samples;

(b) A description of any deviation from the operating parameters established during performance testing, the duration of the deviation, and steps taken to correct the deviation;

(c) Disposition of any product produced during a period of deviation, including whether it was recycled, disposed of as asbestos-containing waste material, or stored temporarily on-site until analyzed for asbestos content;

(d) The information on waste disposal activities as required in paragraph (B)(2) of rule 3745-20-06 of the Administrative Code.

(G) Output material, found to be asbestos free according to paragraph (C)(3) of this rule, is not subject to any of the provisions of this chapter. Output materials in which asbestos is detected, or output materials produced when the operating parameters deviated from those established during the start-up performance testing, unless shown by transmission electron microscopy analysis to be asbestos-free, shall be considered to be asbestos-containing waste and shall be handled and disposed of according to rules 3745-20-05 and 3745-20-06 of the Administrative Code or reprocessed while all of the established operating parameters are being met.

Effective: 03/02/2012

R.C. 119.032 review dates: 11/30/2011 and 11/30/2016

CERTIFIED ELECTRONICALLY
Certification

02/21/2012
Date

Promulgated Under: 119.03
Statutory Authority: 3704.03(E)
Rule Amplifies: 3704.03(A), 3704.03(E)
Prior Effective Dates: 11/18/02, 2/2/07

3745-20-14 **Standard for insulating materials.**

No owner or operator of a facility may install or reinstall on a facility component any insulating materials that contain commercial asbestos if the materials are either molded and friable or wet-applied and friable after drying. The provisions of this rule do not apply to spray-applied insulating materials regulated under rule 3745-20-15 of the Administrative Code.

R.C. 119.032 review dates: 11/30/2011 and 11/30/2016

CERTIFIED ELECTRONICALLY
Certification

11/30/2011
Date

Promulgated Under: 119.03
Statutory Authority: 3704.03(E)
Rule Amplifies: 3704.03(A), 3704.03(E)
Prior Effective Dates: 11/18/02, 2/2/07

3745-20-15 **Standard for spraying.**

[Comment: For dates of non-regulatory government publications, publications of recognized organizations and associations, federal rules, and federal statutory provisions referenced in this rule, see paragraph (C) of rule 3745-20-01 of the Administrative Code titled"Referenced materials."]

(A) No owner or operator of an operation in which asbestos-containing materials are spray applied on buildings, structures, pipes, and conduits, shall use material containing more than one per cent asbestos, as determined using the method specified in 40 CFR Part 763, Subpart E, Appendix E, Section 1, Polarized Light Microscopy (PLM), except as provided in paragraph (C) of this rule.

(B) The owner or operator of an operation in which asbestos-containing materials that contain more than one per cent asbestos, as determined using the method specified in 40 CFR Part 763, Subpart E, Appendix E, Section 1, Polarized Light Microscopy (PLM), are spray applied on equipment and machinery, except as provided in paragraph (C) of this rule, shall:

(1) Notify the director at least twenty days before beginning the spraying operation. Include the following information in the notice:

(a) Name and address of owner or operator.

(b) Location of spraying operation.

(c) Procedures to be followed to meet the requirements of this rule.

(2) Discharge no visible emissions to the outside air from spray-on application of asbestos-containing material or use the methods specified by rule 3745-20-12 of the Administrative Code to clean emissions containing particulate asbestos material before they escape to, or are vented to, the outside air.

(C) The requirements of paragraphs (A) and (B) of this rule do not apply to the spray-on application of materials where the asbestos fibers in the materials are encapsulated with a bituminous or resinous binder during spraying and the materials are not friable after drying.

(D) Owners or operators of sources subject to this rule are exempt from the requirements of Chapters 3745-31 and 3745-35, and rule 3745-20-08 of the Administrative Code.

Effective: 03/02/2012

R.C. 119.032 review dates: 11/30/2011 and 11/30/2016

CERTIFIED ELECTRONICALLY
Certification

02/21/2012
Date

Promulgated Under: 119.03
Statutory Authority: 3704.03(E)
Rule Amplifies: 3704.03(A), 3704.03(E)
Prior Effective Dates: 11/18/02, 2/2/07

Chapter 3745-21: Carbon Monoxide, Photochemically Reactive Materials, Hydrocarbons, and related Materials Standards

Contact: Alan Harness 614-644-4838
Alan.Harness@epa.ohio.gov

3745-21-01 **Definitions.**

[Comment: For dates of non-regulatory government publications of recognized organizations and associations, federal rules, and federal statutory provisions referenced in this rule, see paragraph (JJ) of this rule titled "Reference to materials."]

(A) Except as otherwise provided in this rule, the definitions in rule 3745-15-01 of the Administrative Code shall apply to this chapter.

(B) As used in Chapter 3745-21 of the Administrative Code:

(1) "AAMA" means the American architectural manufacturer association.

(2) "ASTM" means the American society for testing and materials also known as ASTM international.

(3) "Btu" means British thermal unit.

(4) "Btu per hour-foot-degree-Fahrenheit" means British thermal unit per hour-foot-degree-Fahrenheit.

(5) "CTG" means control technique guideline. A CTG is a USEPA guidance document that triggers a responsibility under Section 182(b)(2) of the Clean Air Act for states to submit reasonably available control technology (RACT) rules for stationary sources of VOC emissions as part of their state implementation plans. Each CTG contains a presumptive norm for RACT for a specific category, based on USEPA's evaluation of that category. The following rules promulgated by the Ohio environmental protection agency cover categories for which USEPA has issued a CTG:

(a) Paragraphs (C), (D), (E), (F), (G), (H), (I), (J), (K), (L), (M), (O), (P), (Q), (R), (T), (U), (W), (X), (Y), (Z), (BB), (CC), (DD), (EE), and (DDD) of rule 3745-21-09 of the Administrative Code; and

(b) Rules 3745-21-13, 3745-21-15, 3745-21-19, 3745-21-20, 3745-21-22, 3745-21-23, 3745-21-24, 3745-21-26, 3745-21-27, 3745-21-28, and 3745-21-29 of the Administrative Code.

(6) "DC" means direct current.

(7) "Day" means a period of twenty-four consecutive hours beginning at midnight local time, or beginning at a time consistent with a facility's operating schedule.

(8) "Exempt solvent" means any of the compounds which are specifically identified in paragraph (B)(16) of this rule as not being volatile organic compounds.

(9) "Lb per mmBtu" or "lb/mmBtu" means pound per million British thermal units.

(10) "Incinerator" means a combustion apparatus designed for high temperature operation in which solid, semisolid, liquid, or gaseous combustible wastes are ignited and burned.

(11) "Non-CTG" means all other stationary sources of VOC emissions for which the USEPA has not developed a control technique guideline document.

(12) "Organic compound" means any chemical compound containing carbon excluding carbon monoxide, carbon dioxide, carbonic acid, metallic carbides, metallic carbonates, ammonium carbonate, methane (except methane from landfill gases), and ethane.

(13) "Permit-to-install and operate" or "PTIO" means a permit-to-install and a permit-to-operate applicable to air contaminant sources not located at facilities subject to Chapter 3745-77 of the Administrative Code.

(14) "Potential to emit" means the maximum capacity of a facility or stationary source to emit an organic compound or VOC under its physical and operational design. Any physical or operational limitation on the capacity of the facility or stationary source to emit an organic compound or VOC, including air pollution control equipment and restrictions on hours of operation or on the type or amount of material combusted, stored or processed, shall be treated as part of its design if the limitation or the effect it would have on emissions is federally enforceable or legally and practicably enforceable by the state.

(15) "USEPA" means United States environmental protection agency.

(16) "Volatile organic compound" or "VOC" means any organic compound which participates in atmospheric photochemical reactions. (This includes any organic compound other than the following compounds: methane, ethane, methyl chloroform (1,1,1-trichloroethane), CFC-113 (1,1,2-trichloro-1,2,2-trifluoroethane), methylene chloride, CFC-11 (trichlorofluoromethane), CFC-12 (dichlorodifluoromethane), HCFC-22 (chlorodifluoromethane), HFC-23 (trifluoromethane), CFC-114 (1,2-dichloro-1,1,2,2-tetrafluoroethane), CFC-115 (chloropentafluoroethane), HCFC-123 (1,1,1-trifluoro-2,2-dichloroethane), HFC-134a (1,1,1,2-tetrafluoroethane), HCFC-141b (1,1-dichloro-1-fluoroethane), HCFC-142b (1-chloro-1,1-difluoroethane), HCFC-124 (2-chloro-1,1,1,2-tetrafluoroethane), HFC-125 (pentafluoroethane), HFC-134 (1,1,2,2-tetrafluoroethane), HFC-143a (1,1,1-trifluoroethane), HFC-152a (1,1-difluoroethane), PCBTF (parachlorobenzotrifluoride), cyclic, branched, or linear completely methylated siloxanes, acetone, perchloroethylene (tetrachloroethylene), HCFC-225ca (3,3-dichloro-1,1,1,2,2-pentafluoropropane), HCFC-225cb (1,3-dichloro-1,1,2,2,3-pentafluoropropane), HFC 43-10mee (1,1,1,2,3,4,4,5,5,5-decafluoropentane), HFC-32 (difluoromethane), HFC-161 (ethylefluoride), HFC-236fa (1,1,1,3,3,3-hexafluoropropane), HFC-245ca (1,1,2,2,3-pentafluoropropane), HFC-245ea (1,1,2,3,3-pentafluoropropane),

HFC-245eb (1,1,1,2,3-pentafluoropropane), HFC-245fa (1,1,1,3,3-pentafluoropropane), HFC-236ea (1,1,1,2,3,3-hexafluoropropane), HFC-365mfc (1,1,1,3,3-pentafluorobutane), HCFC-31 (chlorofluoromethane), HCFC-151a (1-chloro-1-fluoroethane), HCFC-123a (1,2-dichloro-1,1,2-trifluoroethane), $C_4F_9OCH_3$ or HFE-7100 (1,1,1,2,2,3,3,4,4-nonafluoro-4-methoxy-butane), $(CF_3)_2CFCF_2OCH_3$(2-(difluoromethoxymethyl) -1,1,1,2,3,3,3-heptafluoropropane), $C_4F_9OC_2H_5$ or HFE-7200 (1-ethoxy-1,1,2,2,3,3,4,4,4-nonafluorobutane), $(CF_3)_2CFCF_2OC_2H_5$ (2-(ethoxydifluoromethyl) -1,1,1,2,3,3,3-heptafluoropropane), methyl acetate, n-C3F7OCH3 or HFE-7000 (1,1,1,2,2,3,3-heptafluoro-3-methoxy-propane), HFE-7500 (3-ethoxy-1,1,1,2,3,4,4,5,5,6,6,6-dodecafluoro-2-(trifluoromethyl) hexane), HFC 227ea (1,1,1,2,3,3,3-heptafluoropropane), methyl formate, t-butyl acetate, dimethyl carbonate, propylene carbonate, any organic compound listed in 40 CFR 51.100(s)(1) or (s)(5), and any class of perfluorocarbon compounds that consists of (a) cyclic, branched, or linear, completely fluorinated alkanes, (b) cyclic, branched, or linear, completely fluorinated ethers with no unsaturations, (c) cyclic, branched, or linear, completely fluorinated tertiary amines with no unsaturations, or (d) sulfur-containing perfluorocarbons with no unsaturations and with sulfur bonds only to carbon and fluorine. These compounds have been determined to have negligible photochemical reactivity. For purposes of determining compliance with emission limits, VOC will be measured by the approved test methods. Where such a method also inadvertently measures compounds with negligible photochemical reactivity, an owner or operator may exclude these negligibly reactive compounds when determining compliance with an emission standard.)

(C) As used in rule 3745-21-07 of the Administrative Code (pertaining to the control of emissions of organic materials from stationary sources):

(1) (Reserved)

(2) "Effluent water separator" means any tank, box, sump, or other container in which any volatile photochemically reactive material floating on or entrained or contained in water entering such tank, box, sump, or other container is physically separated and removed from such water prior to outfall, drainage, or recovery of such water.

(3) "Liquid organic material" means any organic material which is a liquid at standard conditions.

(4) "Organic material" means any chemical compound containing carbon, excluding carbon monoxide, carbon dioxide, carbonic acid, metallic carbides, metallic carbonates, and ammonium carbonate.

(5) "Photochemically reactive material" means any liquid organic material with an aggregate of more than twenty per cent of its total volume composed of the chemical compounds classified below or which exceed any of the following

individual percentage composition limitations, referred to the total volume of liquid:

(a) A combination of hydrocarbons, alcohols, aldehydes, esters, ethers or ketones having an olefinic or cyclo-olefinic type of unsaturation except perchloroethylene: five per cent;

(b) A combination of aromatic hydrocarbons with eight or more carbon atoms to the molecule except ethylbenzene: eight per cent;

(c) A combination of ethylbenzene, ketones having branched hydrocarbon structures, trichloroethylene or toluene: twenty per cent.

Whenever any organic material or any constituent of an organic material may be classified from its chemical structure into more than one of the above groups of organic compounds, it shall be considered as a member of the most reactive chemical group, that is, that group having the least allowable per cent of the total volume of liquid.

(6) "Submerged fill pipe" means any fill pipe with the discharge opening entirely submerged when the liquid level is six inches above the bottom of the tank; or when applied to a tank which is loaded from the side, shall mean any fill pipe with the discharge opening entirely submerged when the liquid level is eighteen inches above the bottom of the tank.

(7) "Volatile photochemically reactive material" means any photochemically reactive material which has a vapor pressure of 1.5 pounds per square inch absolute or greater under actual storage conditions.

(D) As used in paragraphs (B), (C), (D), (E), (F), (G), (H), (I), (J), (K), (S), (U), (Y), (FF), (HH), (II) and (PP) of rule 3745-21-09 of the Administrative Code (pertaining to coating lines and printing lines) and in rules 3745-21-04, 3745-21-10, 3745-21-18, 3745-21-26, and 3745-21-29 of the Administrative Code:

(1) "Adhesion primer" means:

(a) For the purpose of paragraph (HH) of rule 3745-21-09 of the Administrative Code, a coating used to promote adhesion of a topcoat on surfaces such as trim moldings, door locks and door sills, where sanding is impractical.

(b) For the purpose of rule 3745-21-26 of the Administrative Code, a coating that is applied to a polyolefin part to promote the adhesion of a subsequent coating. An adhesion primer is clearly identified as an adhesion primer or adhesion promoter on its accompanying material safety data sheet.

(2) "Adhesive" means any chemical substance that is applied for the purpose of bonding two surfaces together other than by mechanical means.

(3) "Air dried coating" means a coating that is dried by the use of air or forced warm air at temperatures up to one hundred ninety-four degrees Fahrenheit.

(4) "Airless spray" means a spray coating method in which the coating is atomized by forcing it through a small nozzle opening at high pressure. The coating is not mixed with air before exiting from the nozzle opening.

(5) "Anti-chip coating" means a coating designed to reduce stone chipping damage. Anti-chip coatings may be applied to broad areas of the vehicle or to selected vehicle surfaces that are most vulnerable to impingement by stones and other road debris (e.g., rocker panels, the bottom edges of doors and fenders, and the leading edge of the roof). Anti-chip coatings are typically applied after the electrodeposition primer and before the topcoat and are considered primer-surfacer coatings.

(6) "Antifoulant coating" means any coating that is applied to the underwater portion of a boat specifically to prevent or reduce the attachment of biological organisms and that is registered with USEPA as a pesticide under the Federal Insecticide, Fungicide, and Rodenticide Act contained in 7 USC 136 to 136y.

(7) "Antique motor vehicle" means a motor vehicle, but not a reproduction thereof, manufactured more than twenty five years prior to the current year which has been maintained in or restored to a condition which is substantially in conformance with manufacturer specifications.

(8) "Aqueous coating" means a water-based surface coating applied directly over ink on a printed substrate for the purpose of enhancing or protecting the printed surface.

(9) "As applied" means the formulation of a coating during the application on or impregnation into a substrate, including any dilution solvents or thinners added at the source before application of the coating.

(10) "Automobile" means a passenger car or passenger car derivative capable of seating not more than twelve passengers.

(11) "Automobile and light-duty truck adhesive" means an adhesive, including glass bonding adhesive, used at an automobile or light-duty truck assembly coating facility, applied for the purpose of bonding two vehicle surfaces together without regard to the substrates involved.

(12) "Automobile or light-duty truck assembly plant" means a facility where automobile and/or light-duty truck bodies, frames and associated parts, are assembled for eventual inclusion into a finished product ready for sale to vehicle dealers. Customizers, body shops and other repainters are excluded from this definition.

(13) "Automobile and light-duty truck bedliner" means a multi-component coating, used at an automobile or light-duty truck assembly coating facility, applied to a cargo bed after the application of topcoat and outside of the topcoat operation to provide additional durability and chip resistance.

(14) "Automobile and light-duty truck cavity wax" means a coating, used at an automobile or light-duty truck assembly coating facility, applied into the cavities of the vehicle primarily for the purpose of enhancing corrosion protection.

(15) "Automobile and light-duty truck deadener" means a coating, used at an automobile or light-duty truck assembly coating facility, applied to selected vehicle surfaces primarily for the purpose of reducing the sound of road noise in the passenger compartment.

(16) "Automobile and light-duty truck gasket/gasket sealing material" means a fluid, used at an automobile or light-duty truck assembly coating facility, applied to coat a gasket or replace and perform the same function as a gasket. Automobile and light-duty truck gasket/gasket sealing material includes room temperature vulcanization (RTV) seal material.

(17) "Automobile and light-duty truck glass bonding primer" means a primer, used at an automobile or light-duty truck assembly coating facility, applied to windshield or other glass, or to body openings, to prepare the glass or body opening for the application of glass bonding adhesives or the installation of adhesive bonded glass. Automobile and light-duty truck glass bonding primer includes glass bonding/cleaning primers that perform both functions (cleaning and priming of the windshield or other glass, or body openings) prior to the application of adhesive or the installation of adhesive bonded glass.

(18) "Automobile and light-duty truck lubricating wax/compound" means a protective lubricating material, used at an automobile or light-duty truck assembly coating facility, applied to vehicle hubs and hinges.

(19) "Automobile and light-duty truck sealer" means a high viscosity material, used at an automobile or light-duty truck assembly coating facility, generally, but not always, applied in the paint shop after the body has received an electrodeposition primer coating and before the application of subsequent coatings (e.g., primer-surfacer). The primary purpose of automobile and light-duty truck sealer is to fill body joints completely so that there is no intrusion of water, gases or corrosive materials into the passenger area of the body compartment. Such materials are also referred to as sealant, sealant primer, or caulk.

(20) "Automobile and light-duty truck trunk interior coating" means a coating, used at an automobile or light-duty truck assembly coating facility outside of the primer-surfacer and topcoat operations, applied to the trunk interior to provide chip protection.

(21) "Automobile and light-duty truck underbody coating" means a coating, used at an automobile or light-duty truck assembly coating facility, applied to the undercarriage or firewall to prevent corrosion and/or provide chip protection.

(22) "Automobile and light-duty truck weatherstrip adhesive" means an adhesive, used at an automobile or light-duty truck assembly coating facility, applied to weatherstripping materials for the purpose of bonding the weatherstrip material to the surface of the vehicle.

(23) "Automotive elastomeric coating" means a coating designed for application over surfaces of flexible mobile equipment and mobile equipment components, such as elastomeric bumpers.

(24) "Automotive impact-resistant coating" means a coating designed to resist chipping caused by road debris.

(25) "Automotive jambing clearcoat" means a fast-drying, ready-to-spray clearcoat applied to surfaces such as door jambs and trunk and hood edges to allow for quick closure.

(26) "Automotive lacquer" means a thermoplastic coating applied directly to bare metal surfaces of mobile equipment and mobile equipment components which dries primarily by solvent evaporation, and which is resoluble in its original solvent.

(27) "Automotive low-gloss coating" means a coating which exhibits a gloss reading less than or equal to twenty-five on a sixty-degree-glossmeter.

(28) "Automotive multi-colored topcoat" means a topcoat that exhibits more than one color, is packaged in a single container, and camouflages surface defects on areas of heavy use, such as cargo beds and other surfaces of trucks and other utility vehicles.

(29) "Automotive pretreatment" means a primer that contains a minimum of 0.5 per cent acid, by weight, that is applied directly to bare metal surfaces of mobile equipment and mobile equipment components to provide corrosion resistance and to promote adhesion of subsequent coatings.

(30) "Automotive primer-sealer" means a coating applied to mobile equipment and mobile equipment components prior to the application of a topcoat for the purpose of providing corrosion resistance, promoting adhesion of subsequent coatings, promoting color uniformity, and promoting the ability of the undercoat to resist penetration by the topcoat.

(31) "Automotive primer-surfacer" means a coating applied to mobile equipment and mobile equipment components prior to the application of topcoat for the purpose of filling surface imperfections in the substrate; providing corrosion resistance; or promoting adhesion of subsequent coatings.

(32) "Automotive specialty coating" means coatings including, but not limited to, elastomeric coatings, adhesion promoters, low gloss coatings, bright metal trim repair coatings, jambing clearcoats, impact resistant coatings, rubberized asphaltic underbody coatings, uniform finish blenders, weld-through primers applied to automotive surfaces and lacquer topcoats applied to a classic motor vehicle or to an antique motor vehicle.

(33) "Automotive topcoat" means a coating or series of coatings applied over an automotive primer-surfacer, automotive primer-sealer or existing finish on the surface of mobile equipment and mobile equipment components for the purpose of protection or beautification.

(34) "Automotive touch up repair" means the application of automotive topcoat finish materials to cover minor finishing imperfections equal to or less than one inch in diameter.

(35) "Automotive/transportation plastic parts" means the interior and exterior plastic components of automobiles, trucks, tractors, lawnmowers, and other like mobile equipment intended for primary use on land, with the exception of the following: plastic parts coated on the main (body) paint line in automobile and light duty truck assembly plants and truck assembly plants, and plastic parts coated during the refinishing or final repair of automobiles, trucks, tractors, lawnmowers and other like mobile equipment.

(36) "Baked coating" means a coating that is cured at a temperature at or above one hundred ninety-four degrees Fahrenheit.

(37) "Basecoat" means, for can coating lines, the exterior base coating of a two-piece can or the exterior and interior base coating of a three-piece can or three-piece can end; and basecoat means, for automotive/transportation plastic parts coating lines, the highly pigmented, often metallic first coating in a two-step topcoat system which is followed by a clearcoat, resulting in a finish with high-gloss characteristics.

(38) "Basecoat/clearcoat system" means a topcoat system applied to exterior and selected interior vehicle surfaces primarily to provide an aesthetically pleasing appearance and acceptable durability performance. It consists of a layer of pigmented basecoat color coating, followed directly by a layer of a clear or semitransparent coating. It may include multiple layers of color coats or tinted clear materials.

(39) "Black automotive coating" means a coating which meets both of the following criteria:

(a) Maximum lightness: twenty-three units; and

(b) Saturation: less than 2.8, where saturation equals the square root of $A^2 + B^2$.

These criteria are based on Cielab color space, 0/45 geometry. For spherical geometry, specular included, maximum lightness is thirty-three units.

(40) "Body part" means exterior parts of motor vehicles such as hoods, fenders, doors, roof, quarter panels, decklids, tail gates, and cargo beds. Body parts were traditionally made of sheet metal, but now are also made of plastic. Bumpers, fascia, and cladding are not body parts.

(41) "Business machine" means a device that uses electronic or mechanical methods to process information, perform calculations, print or copy information or convert sound into electrical impulses for transmission, including devices listed in standard industrial classification numbers 3572, 3573, 3574, 3579, and 3661 and photocopy machines, a subcategory of standard industrial classification number 3861.

(42) "Business machine plastic parts" means the plastic housings and other exterior plastic components of electronic office equipment and musical equipment, including, but not limited to the following: computers, monitors, printers and keyboards, facsimile machines, copiers, microfiche readers, cellular and standard phones, and pencil sharpeners. This definition excludes internal electrical components of business machines.

(43) "Camouflage coating" means a coating, used principally by the military, to conceal equipment from detection.

(44) "Can" means a single walled metal container constructed wholly of tin plate, terne plate, black plate (including tin-free steel), waste plate, aluminum sheet, or impact extrusions designed for packaging products. It excludes "steel pails" defined as single walled shipping containers having capacities of one gallon or greater and which are cylindrically constructed of steel of twenty-nine-gauge or heavier.

(45) "Capture system" means all equipment, including but not limited to hoods, ducts, fans, ovens and dryers, used to contain, collect, and route VOC vapors released from a coating line or printing line.

(46) "Classic motor vehicle" means a motor vehicle, but not a reproduction thereof, manufactured at least fifteen years prior to the current year which has been maintained in or restored to a condition which is substantially in conformity with manufacturer specifications and appearance.

(47) "Cleaning material" means a solvent used to remove contaminants and other materials such as dirt, grease, oil, and dried (e.g., depainting) or wet coating from a substrate before or after coating application; or from equipment associated with a coating operation, such as spray booths, spray guns, tanks, and hangers. Thus, it includes any cleaning material used on substrates or equipment or both.

(48) "Clearcoat" means a transparent coating usually applied over a colored, opaque coat to improve gloss and provide protection to the colorcoat below.

(49) "Clear coating" means a colorless coating which contains binders, but no pigment, and is formulated to form a transparent film.

(50) "Coating or surface coating" means a material applied onto or saturated within a substrate for decorative, protective or functional purposes. Such materials include, but are not limited to, paints, varnishes, sealers, adhesives and inks.

(51) "Coating applicator" means an apparatus used to apply a surface coating.

(52) "Coating line" means an operation consisting of a series of one or more coating applicators and any associated flash-off areas, drying areas and ovens wherein a surface coating is applied, dried, and/or cured. It is not necessary for an operation to have an oven, or flash-off area, or drying area in order to be included within this definition.

(53) "Coating of plastic parts of automobiles and trucks" means the coating of any plastic part that is or shall be assembled with other parts to form an automobile or truck.

(54) "Coating of plastic parts of business machines" means the coating of any plastic part that is or shall be assembled with other parts to form a business machine.

(55) "Coil" means a flat metal sheet or strip that is packaged in a roll and that has a thickness of 0.006 inch or more.

(56) "Commercial motor vehicle and mobile equipment refinishing operation" means any company or individual, other than the original manufacturer, that applies a coating containing a VOC as a pretreatment, primer, sealant, basecoat, clear coat, or topcoat to mobile equipment for commercial purposes.

(57) "Continuously monitor" means to measure data values of a parameter at least once every fifteen minutes and to record either each measured data value or block average values for a fifteen-minute or shorter time period. A block average value is the average of all measured data values during the time period; or if data values are measured more frequently than once per minute, the average of measured data values taken at least once per minute during the time period.

(58) "Control system" means any device or combination of devices designed to recover or incinerate VOC vapors received from a capture system.

(59) "Dip coating" means a method of applying coatings to a substrate by submersion into and removal from a coating bath.

(60) "Drum" means any cylindrical metal shipping container larger than twelve gallons but no larger than one hundred ten gallons in capacity.

(61) "Electrostatic application" means a method of applying coating particles or coating droplets to a grounded substrate by electrically charging them.

(62) "Electric-dissipating coating" means a coating that rapidly dissipates a high-voltage electric charge.

(63) "Electric-insulating and thermal-conducting coating" means a coating that displays an electrical insulation of at least one thousand volts DC per mil on a flat test plate and an average thermal conductivity of at least 0.27 Btu per hour-foot-degree-Fahrenheit.

(64) "Electric-insulating varnish" or "electric-insulating coating" means a non-convertible-type coating applied to electric motors, components of electric motors, or power transformers, to provide electrical, mechanical, and environmental protection or resistance.

(65) "Electrodeposition" or "EDP" means the application of a surface coating to an object by immersing the object into a water bath containing the surface coating material and inducing an electric potential between the object and the bath.

(66) "Electrodeposition primer" or "EDP primer" means a process of applying a protective, corrosion-resistant waterborne primer on exterior and interior surfaces that provides thorough coverage of recessed areas. It is a dip coating method that uses an electrical field to apply or deposit the conductive coating onto the part. The object being painted acts as an electrode that is oppositely charged from the particles of paint in the dip tank. Also referred to as E-coat, Uni- Prime, and ELPO primer.

(67) "Electromagnetic interference/radio frequency interference shielding coating" or "EMI/RFI shielding coating" means a coating used on electrical or electronic equipment to provide shielding against electromagnetic interference, radio frequency interference, or static discharge.

(68) "Electrostatic preparation coating" means a coating that is applied to a plastic part solely to provide conductivity for the subsequent application of a prime, a topcoat, or other coating through the use of electrostatic application methods. An electrostatic prep coat is clearly identified as an electrostatic prep coat on its accompanying material safety data sheet.

(69) "Enamel" means a type of surface coating in which drying occurs by evaporation of the solvent and polymerization of the pigmented drying oils.

(70) "End sealing compound" means a synthetic rubber or plastic compound which is applied onto can ends and which functions as a gasket when the end is assembled on the can.

(71) "Etching filler coating" means coating that contains less than twenty-three per cent solids by weight and at least one-half per cent acid by weight, and is used instead of applying a pretreatment coating followed by a primer.

(72) "Excluding water" means subtracting the volume of water and other volatile materials which are not VOC.

(73) "Exterior base coating" means a coating applied to the exterior of a can to provide exterior protection to the metal and/or to provide background for the lithographic or printing operation.

(74) "Exterior bottom end" means the outside surface of the bottom side of a two-piece can.

(75) "Extreme high-gloss coating" means:

(a) For the surface coating of metal furniture, a coating which, when tested by ASTM D523-89(1999), shows a reflectance of seventy-five or more on a sixty degree meter; or

(b) For the surface coating of miscellaneous metal or plastic parts, a coating which, when tested by ASTM D523-89(1999), shows a reflectance of ninety or more on a sixty degree meter.

(76) "Extreme performance coating" means:

(a) For the surface coating of metal furniture, a coating designed for exposure to any of the following: year-round outdoor weather, temperatures consistently above two hundred three degrees Fahrenheit, detergents, scouring, solvents, corrosive materials, corrosive atmospheres or similar harsh conditions; or

(b) For the surface coating of miscellaneous metal or plastic parts, a coating used on a metal or plastic surface where the coated surface is, in its intended use, subject to the following:

(i) Chronic exposure to corrosive, caustic or acidic agents, chemicals, chemical fumes, chemical mixtures or solutions; or

(ii) Repeated exposure to temperatures in excess of two hundred and fifty degrees Fahrenheit; or

(iii) Repeated heavy abrasion, including mechanical wear and repeated scrubbing with industrial grade solvents, cleansers or scouring agents.

Extreme performance coatings include, but are not limited to, coatings applied to locomotives, railroad cars, farm machinery, and heavy duty trucks.

(77) "Extrusion coater" means an apparatus in which a coating material is applied by means of a slotted die to a moving substrate, which is fed from an unwinding roll.

(78) "Fabric coating" means a coating applied to a textile substrate by dipping or by means of a knife or roll coater.

(79) "Final repair" means the operations performed and coating(s) applied to completely-assembled motor vehicles or to parts that are not yet on a completely assembled vehicle to correct damage or imperfections in the coating. The curing of the coatings applied in these operations is accomplished at a lower temperature than that used for curing primer-surfacer and topcoat. This lower temperature cure avoids the need to send parts that are not yet on a completely assembled vehicle through the same type of curing process used for primer-surfacer and topcoat and is necessary to protect heat sensitive components on completely assembled vehicles.

(80) "Finish primer/surfacer coating" means a coating applied with a wet film thickness of less than ten mils prior to the application of a topcoat for purposes of providing corrosion resistance, adhesion of subsequent coatings, a moisture barrier, or promotion of a uniform surface necessary for filling in surface imperfections.

(81) "Flashoff area" means the area of a facility through which coated materials travel from the coating applicator to the oven.

(82) "Flexible coating" means any coating with the ability to withstand dimensional changes that is required to comply with engineering specifications for impact resistance, mandrel bend, or elongation as defined by the original equipment manufacturer.

(83) "Flexographic packaging printing line" means a means a flexographic printing line in which surface coatings are applied to paper, paperboard, metal foil, plastic film, or other substrates which are subsequently formed into packaging products or labels for articles.

(84) "Flexographic printing line" means a printing line in which each roll printer uses a roll with raised areas for applying an image to the substrate. The image carrier on the roll is made of rubber or other flexible elastomeric material.

(85) "Flow coat" means a non-atomized technique of applying coatings to a substrate with a fluid nozzle in a fan pattern with no air supplied to the nozzle.

(86) "Fog coating" means a coating is applied to a plastic part for the purpose of color matching without masking a molded-in texture. A fog coat shall not be applied at a thickness of more than 0.5 mils of coating solids.

(87) "Food can ends" means can ends used for cans that store food products other than soft drinks or alcoholic beverages.

(88) "Fountain solution" means a surface coating applied to the plate roll of an offset lithographic printing line for the purpose of wetting only the nonimage areas so that they are not ink receptive.

(89) "Glossreducer" means:

(a) For miscellaneous metal and plastic parts, a low gloss coating formulated to eliminate glare for safety purposes on interior surfaces of a vehicle, as specified under United States department of transportation motor vehicle safety standards.

(b) For miscellaneous industrial adhesives and sealants, a coating that is applied to a plastic part solely to reduce the shine of the part and such gloss reducer shall not be applied at a thickness of more than 0.5 mils of coating solids.

(90) "Guidecoat" means a surface coating applied to the body of an automobile or light-duty truck between the electrodeposition prime coat and the topcoat.

(91) "Hand application methods" means the application of coatings by manually held non-mechanically operated equipment. Such equipment includes paintbrushes, hand rollers, caulking guns, trowels, spatulas, syringe daubers, rags, and sponges.

(92) "Heat-resistant coating" means a coating that must withstand a temperature of at least four hundred degrees Fahrenheit during normal use.

(93) "Heavier vehicle" means a self-propelled vehicle designed for transporting persons or property on a street or highway that has a gross vehicle weight rating over eighty-five hundred pounds.

(94) "Heavier vehicle assembly facility" means a facility where heavier vehicle bodies, frames and associated parts, are assembled for eventual inclusion into a finished product ready for sale to vehicle dealers. Customizers, body shops and other repainters are excluded from this definition.

(95) "High-bake coating" means a coating designed to cure at temperatures above one hundred ninety-four degrees Fahrenheit.

(96) "High-build primer/surfacer coating" means a coating applied with a wet film thickness of ten mils or more prior to the application of a topcoat for purposes of providing corrosion resistance, adhesion of subsequent coatings, or a moisture barrier, or promoting a uniform surface necessary for filling in surface imperfections.

(97) "High-gloss coating" means any coating which shows a reflectance of eighty-five on a sixty degree meter when tested by ASTM D523-89(1999).

(98) "High-performance architectural coating" means a coating used to protect architectural subsections and which meets the requirements of the architectural aluminum manufacturer association's publication number AAMA 2604-04 "Voluntary Specification, Performance Requirements and Test Procedures for High Performance Organic Coatings on Aluminum Extrusions and Panels" or AAMA 2605-05 "Voluntary Specification, Performance Requirements and Test Procedures for Superior Performing Organic Coatings on Aluminum Extrusions and Panels" of the architectural aluminum manufacturer's association.

(99) "High-performance architectural aluminum coating" means a coating that is applied to aluminum used in architectural subsections and that meets the requirements of publication number AAMA 2605-02, "Voluntary Specification, Performance Requirements and Test Procedures for Superior Performing Organic Coatings on Aluminum Extrusions and Panels," of the architectural aluminum manufacturer's association.

(100) "High-temperature coating" means a coating that is certified to with stand a temperature of one thousand degrees Fahrenheit for twenty-four hours.

(101) "High volume, low pressure sprayer" or "HVLP sprayer" means an air atomized sprayer that operates at a maximum air pressure of ten pounds per square inch gauge (psig) as measured at the nozzle.

(102) "Ink" means a coating applied by a roll printer.

(103) "In-line repair" means the operation performed and coating(s) applied to correct damage or imperfections in the topcoat on parts that are not yet on a completely assembled vehicle. The curing of the coatings applied in these operations is accomplished at essentially the same temperature as that used for curing the previously applied topcoat. Also referred to as high bake repair or high bake reprocess. In-line repair is considered part of the topcoat operation.

(104) "Interior base coating" means a coating applied to the interior of a can.

(105) "Interior body coating" means a coating applied subsequent to the application of an interior base coating to the interior of a can body.

(106) "Knife coater" means an apparatus in which a coating material is applied to a moving substrate, which is fed from an unwinding roll, by drawing the substrate beneath a knife (blade) that is designed to spread the coating evenly over the width of the substrate.

(107) "Lacquer" means a type of surface coating in which drying occurs by evaporation of the solvent and deposition of the resin and any pigment.

(108) "Large appliance" means door, case, lid, panel, interior part, and/or interior support part of a residential or commercial washer, dryer, range, refrigerator, freezer, water heater, dishwasher, trash compactor, air conditioner, ovens, microwave ovens, or other similar product.

(109) "Light-duty truck" means a motor vehicle rated at eight thousand five hundred pounds gross weight or less which is designed primarily for highway use and for the transportation of property, or is a derivative of such vehicle.

(110) "Line" means the same as "coating line."

(111) "Lithographic printing line" means a printing line, except that the substrate is not necessarily fed from an unwinding roll, in which each roll printer uses a roll where both the image and nonimage areas are essentially in the same plane (planographic).

(112) "Low-bake coatings" means coatings designed to cure at temperatures below one hundred ninety-four degrees Fahrenheit.

(113) "Magnet wire coating" means a coating of electrically insulating varnish or enamel which is applied to aluminum or copper wire prior to its formation into an electromagnetic coil.

(114) "Magnetic data storage disk coating" mean a coating used on a metal disk which stores data magnetically.

(115) "Mask coating" means a thin film coating applied through a template to coat a small portion of a substrate.

(116) "Metal furniture" means any metal part of household, business, institutional or office furniture, excluding hardware. Such furniture includes, but is not limited to, cabinets, cases, desks, chairs, tables, partitions, shelving, lockers, storage racks, indoor waste receptacles and fixtures.

(117) "Metallic coating" means a coating which contains more than five grams of metal particles per liter of coating, as applied. Metal particles are pieces of a pure elemental metal or a combination of elemental metals.

(118) "Military specification coating" means a coating which has a formulation approved by a United States military agency for use on military equipment.

(119) "Miscellaneous metal part or product" means any metal part or metal product except the following: cans, coils, metal furniture, large appliances, and aluminum or copper wire prior to its formation into an electromagnetic coil.

(120) "Mobile equipment" means any equipment that may be drawn or is capable of being driven on a roadway, including, but not limited to, automobiles, trucks,

truck bodies, truck trailers, cargo vaults, utility bodies, camper shells, construction equipment, farming equipment, and motorcycles.

(121) "Mold-seal coating" means the initial coating applied to a new mold or repaired mold to provide a smooth surface which, when coated with a mold release coating, prevents products from sticking to the mold.

(122) "Motor vehicle bedliner" means a multi-component coating, used at a facility that is not an automobile or light-duty truck assembly coating facility, applied to a cargo bed after the application of topcoat to provide additional durability and chip resistance.

(123) "Motor vehicle cavity wax" means a coating, used at a facility that is not an automobile or light-duty truck assembly coating facility, applied into the cavities of the vehicle primarily for the purpose of enhancing corrosion protection.

(124) "Motor vehicle deadener" means a coating, used at a facility that is not an automobile or light-duty truck assembly coating facility, applied to selected vehicle surfaces primarily for the purpose of reducing the sound of road noise in the passenger compartment.

(125) "Motor vehicle gasket/gasket sealing material" means a fluid, used at a facility that is not an automobile or light-duty truck assembly coating facility, applied to coat a gasket or replace and perform the same function as a gasket. Automobile and light-duty truck gasket/gasket sealing material includes room temperature vulcanization (RTV) seal material.

(126) "Motor vehicle lubricating wax/compound" means a protective lubricating material, used at a facility that is not an automobile or light-duty truck assembly coating facility, applied to vehicle hubs and hinges.

(127) "Motor vehicle sealer" means a high viscosity material, used at a facility that is not an automobile or light-duty truck assembly coating facility, generally, but not always, applied in the paint shop after the body has received an electrodeposition primer coating and before the application of subsequent coatings (e.g., primer-surfacer). The primary purpose of automobile and light-duty truck sealer is to fill body joints completely so that there is no intrusion of water, gases or corrosive materials into the passenger area of the body compartment. Such materials are also referred to as sealant, sealant primer, or caulk.

(128) "Motor vehicle trunk interior coating" means a coating, used at a facility that is not an automobile or light-duty truck assembly coating facility, applied to the trunk interior to provide chip protection.

(129) "Motor vehicle underbody coating" means a coating, used at a facility that is not an automobile or light-duty truck assembly coating facility, applied to the undercarriage or firewall to prevent corrosion and/or provide chip protection.

(130) "Multi-colored coating" means a coating which exhibits more than one color when applied, and which is packaged in a single container and applied in a single coat.

(131) "Multi-component coating" means a coating requiring the addition of a separate reactive resin, commonly known as a catalyst or hardener, before application to form an acceptable dry film.

(132) "Non-flexible coating" means any coating without the ability to withstand dimensional changes that is not required to comply with engineering specifications for impact resistance, mandrel bend, or elongation as defined by the original equipment manufacturer.

(133) "Offset lithographic printing line" means a lithographic printing line where the image is applied from a plate roll to an intermediate (blanket) roll and then transferred onto the substrate.

(134) "One-component coating" means a coating that is ready for application as it comes out of its container to form an acceptable dry film. A thinner, necessary to reduce the viscosity, is not considered a component.

(135) "Optical coating" means a coating applied to an optical lens.

(136) "Oven" means a chamber within which heat is used for one or more of the following purposes: dry, bake, cure or polymerize a surface coating or ink.

(137) "Overvarnish" means a surface coating applied directly over ink on the exterior of a can.

(138) "Packaging rotogravure printing line" means a rotogravure printing line in which surface coatings are applied to paper, paperboard, metal foil, plastic film, or other substrates which are subsequently formed into packaging products or labels for articles.

(139) "Pan backing coating" means a coating applied to the surface of pots, pans, or other cooking implements that are exposed directly to a flame or other heating elements.

(140) "Paper coating" means a coating applied by dipping or by means of a knife, roll or extrusion coater to paper, paperboard, pressure sensitive tapes or labels, plastic film, or metal foil. Excluded from this definition are coatings used in substrate formation within a papermaking system and coatings applied within a printing line which is in compliance with the emission requirements contained in paragraph (Y) of rule 3745-21-09 of the Administrative Code.

(141) "Papermaking system" means all equipment used to convert pulp into paper, paperboard or market pulp, including the stock storage and preparation systems,

the paper or paperboard machines, and the paper machine white water system, broke recovery systems, and the systems involved in calendering, drying, on-machine coating, slitting, winding and cutting.

(142) "Paper treater" means a coating line in which a uniform layer of phenolic or melamine resin is applied by dipping a continuously moving paper substrate into the resin and then using rollers to squeeze the excess resin from the paper.

(143) "Plastic or composites molding facility" means a facility where the purchase cost of capital equipment used for plastic or composites molding, including presses, tooling, and associated material processing and handling equipment, is greater than the purchase cost of capital equipment used for the surface coating of new automobile, new light-duty truck, or new heavier vehicle bodies or body parts for new automobiles, new light-duty trucks, or new heavier vehicles.

(144) "Plastic part" means a product, or piece of a product, made from a substance that has been formed from resin through the application of pressure or heat or both.

(145) "Pleasure craft" means vessels which are manufactured or operated primarily for recreational purposes, or leased, rented, or chartered to a person or business for recreational purposes. The owner or operator of such vessels shall be responsible for certifying that the intended use is for recreational purposes.

(146) "Pleasure craft surface coating" means any marine coating, except unsaturated polyester resin (fiberglass) coatings, applied by brush, spray, roller, or other means to a pleasure craft.

(147) "Prefabricated architectural component coating" means a coating applied to metal parts and products which are to be used as an architectural structure.

(148) "Pretreatment coating" means a coating which contains no more than twelve per cent solids by weight, and at least one-half per cent acid, by weight, is used to provide surface etching, and is applied directly to metal surfaces to provide corrosion resistance, adhesion, and ease of stripping.

(149) "Pretreatment wash primer coating" means a coating which contains no more than twelve per cent solids, by weight, and at least one-half per cent acids, by weight; is used to provide surface etching; and is applied directly to fiberglass and metal surfaces to provide corrosion resistance and adhesion of subsequent coatings.

(150) "Primary coating" means electrodeposition primer, primer-surfacer (including anti-chip coatings), topcoat (basecoat and clearcoat) and final repair.

(151) "Prime coat" means a surface coating which is used to aid the adhesion of a topcoat to a surface and/or prevent corrosion of the metal being coated. For the

purpose of emission limitations, guidecoat and surfacer are included in the definition of prime coat.

(152) "Primer" means any coating formulated and applied to a substrate to provide a firm bond between the substrate and subsequent coats.

(153) "Primer-surfacer" means an intermediate protective coating applied over the electrodeposition primer and under the topcoat. Primer-surfacer provides adhesion, protection, and appearance properties to the total finish. Primer-surfacer may also be called guidecoat or surfacer. Primer-surfacer operations may include other coating(s) (e.g., anti-chip, lower-body anti-chip, chip-resistant edge primer, spot primer, blackout, deadener, interior color, basecoat replacement coating, etc.) that is (are) applied in the same spray booth(s).

(154) "Printing line" means an operation consisting of a series of one or more roll printers and any associated in-line roll coaters, in-line extrusion coaters, drying areas and ovens wherein one or more surface coatings are applied, dried, and/or cured. It is not necessary for an operation to have an oven or drying area in order to be included within this definition.

(155) "Publication rotogravure printing line" means a rotogravure printing line in which surface coatings are applied to paper which is subsequently formed into books, catalogues, brochures, directories, newspaper supplements or other types of printed materials.

(156) "Reactive adhesive" means an adhesive system composed, in part, of volatile monomers that react during the adhesive curing reaction, and, as a result, do not evolve from the film during use. These volatile components instead become integral parts of the adhesive through chemical reaction. At least seventy per cent of the liquid components of the system, excluding water, react during the process.

(157) "Red coating" means a coating which meets all of the following criteria:

(a) Yellow limit: the hue of hostaperm scarlet.

(b) Blue limit: the hue of monastral red-violet.

(c) Lightness limit for metallics: thirty-five per cent aluminum flake.

(d) Lightness limit for solids: fifty per cent titanium dioxide white.

(e) Solid reds: hue angle of negative eleven to positive thirty-eight degrees and maximum lightness of twenty-three to forty-five units.

(f) Metallic reds: hue angle of negative sixteen to positive thirty-five degrees and maximum lightness of twenty-eight to forty-five units.

These criteria are based on Cielab color space, 0/45 geometry. For spherical geometry, specular included, the upper limit is forty-nine units. The maximum lightness varies as the hue moves from violet to orange. This is a natural consequence of the strength of the colorants, and real colors show this effect.

(158) "Repair coating" means a coating used to re-coat portions of a previously coated product which has sustained mechanical damage to the coating following normal painting operations.

(159) "Resist coating" means a coating that is applied to a plastic part before metallic plating to prevent deposits of metal on portions of the plastic part.

(160) "Roll coat" means a coating method using a machine that applies coating to a substrate by continuously transferring coating through a pair or set of oppositely rotating rollers.

(161) "Roll coater" means an apparatus in which a uniform layer of coating material is applied by means of a roll or rolls across the entire width of a moving substrate, which is fed from an unwinding roll.

(162) "Roll printer" means an apparatus in which a surface coating is applied by means of a roll or rolls with only partial coverage across the width of a moving substrate, which is fed from an unwinding roll. The partial coverage results in the formation of words, designs or pictures on the substrate.

(163) "Rotogravure printing line" means a printing line in which each roll printer uses a roll with recessed areas for applying an image to the substrate.

(164) "Safety-indicating coating" means a coating which changes physical characteristics, such as color, to indicate unsafe conditions.

(165) "Shock-free coating" means a coating applied to electrical components to protect the user from electric shock. The coating has characteristics of being of low capacitance and high resistance, and having resistance to breaking down under high voltage.

(166) "Silicone-release coating" means any coating which contains silicone resin and is intended to prevent food from sticking to metal surfaces such as baking pans.

(167) "Single coat" means a single film of coating applied directly to the substrate omitting the primer application.

(168) "Side-seam" means the welded, cemented, or soldered seam of a three-piece can.

(169) "Soft coat" means any coating that provides a soft tactile feel similar to leather and a rich leather like appearance when applied to plastic interior automotive parts and exterior business machine parts.

(170) "Solar-absorbent coating" means a coating which has as its prime purpose the absorption of solar radiation.

(171) "Solid-film lubricant" means a very thin coating consisting of a binder system containing as its chief pigment material one or more of molybdenum disulfide, graphite, polytetrafluoroethylene (PTFE) or other solids that act as a dry lubricant between faying surfaces.

(172) "Solids turnover ratio" means the ratio of total volume of coating solids that is added to the EDP system in a calendar month divided by the total volume design capacity of the EDP system.

(173) "Sound-proofing material" means a surface coating applied for the primary purpose of reducing the transmission of noise into or through the coated object.

(174) "Steel pail or drum" means any single walled shipping container which has a capacity of one gallon or greater and which is cylindrically constructed of steel of twenty-nine gauge or heavier.

(175) "Stencil coating" means:

(a) For the surface coating of miscellaneous metal and plastic parts, an ink or a pigmented coating which is rolled or brushed onto a template or stamp in order to add identifying letters, symbols and/or numbers; or

(b) For the surface coating of automotive/transportation and business machine plastic parts, a coating that is applied over a stencil to a plastic part at a thickness of one mil or less of coating solids. Stencil coats are most frequently letters, numbers, or decorative designs.

(176) "Surfacer" means a surface coating applied to the body of an automobile or light-duty truck between the electrodeposition prime coat and the topcoat.

(177) "Texture coat" or "texture coating" means a coating applied to a plastic part which, in its finished form, consists of discrete raised spots of coating.

(178) "Topcoat" means:

(a) One or more surface coatings, excluding final repair, which are applied after the prime coat for desired aesthetic effects; or

(b) For an automobile or light-duty truck assembly facility and a heavier vehicle assembly facility, the final coating system applied to provide the final color and/or a protective finish. The topcoat may be a monocoat color or basecoat/clearcoat system. In-line repair and two-tone are part of topcoat. Topcoat operations may include other coatings (e.g., blackout, interior color, etc.) that are applied in the same spray booths; or

(c) For a pleasure craft, the final coating applied to the interior or exterior of the craft.

(179) "Touch-up coating" means a coating used to cover minor coating imperfections appearing after the main coating operation.

(180) "Transfer efficiency" means the percentage of total coating solids employed by a coating applicator which adheres to the object being coated.

(181) "Translucent coating" means a coating which contains binders and pigment, and is formulated to form a colored, but not opaque, film.

(182) "Two-component coating" means a coating requiring the addition of a separate reactive resin, commonly known as a catalyst, before application to form an acceptable dry film.

(183) "Vacuum metallizing" means a process whereby metal is vaporized and deposited on a substrate in a vacuum chamber.

(184) "Vacuum metallizing coating" means:

(a) For the surface coating of miscellaneous metal and plastic parts, the undercoat applied to the substrate on which the metal is deposited or the overcoat applied directly to the metal film. Vacuum metallizing/physical vapor deposition (PVD) is the process whereby metal is vaporized and deposited on a substrate in a vacuum chamber; or

(b) For the surface coating of automotive/transportation and business machine plastic parts, a topcoat and/or basecoat that is used in the vacuum metallizing process.

(185) "Varnish coating" means an oil-based surface coating applied directly over ink on a printed substrate for the purpose of enhancing or protecting the printed surface.

(186) "Vinyl coating" means a coating or ink applied to the surface of vinyl coated fabric, vinyl sheets, or other vinyl products by means of a knife coater, roll coater, or roll printer. For purposes of this rule, "vinyl coating" shall not include organisol or plastisol coatings.

(187) "Zinc rich primer coating" means any coating which contains primarily zinc pigment on a weight basis, which is applied as a prime coat to a metal part or product prior to assembly, and which is dried at ambient or in-plant temperature.

(E) As used in paragraphs (L), (M), (T) and (Z) of rule 3745-21-09 of the Administrative Code (pertaining to storage tanks and to petroleum refinery equipment) and in rules 3745-21-04, 3745-21-10 and 3745-21-21 of the Administrative Code:

(1) "Component" means any piece of equipment which has the potential to leak organic compounds into the atmosphere. Such equipment includes, but is not limited to, pump seals, compressor seals, seal oil degassing vents, pipeline valves, pressure relief devices, process drains and open ended pipes.

(2) "Condensate" means any organic compound separated from natural gas which condenses due to changes in the temperature and/or pressure and remains liquid at standard conditions.

(3) "Crude oil" means a naturally occurring mixture which consists of hydrocarbons and/or sulfur, nitrogen and/or oxygen derivatives of hydrocarbons and which is a liquid at standard conditions.

(4) "Custody transfer" means the transfer of produced crude oil and/or condensate, after processing and/or treating in the producing operations, from storage tanks or automatic transfer facilities to pipelines or any other forms of transportation.

(5) "External floating roof tank" means an open top storage vessel with a cover, consisting of a double deck or pontoon single deck, which rests upon and is supported by the contained liquid and which is equipped with a closure seal or seals to close the space between the roof edge and tank wall.

(6) "Firebox" means the chamber or compartment of a boiler or furnace in which materials are burned, but does not mean the combustion chamber of an incinerator.

(7) "Fixed roof tank" means a steel cylindrical shell with a permanently affixed roof.

(8) "Flexible wiper primary seal" means a continuous sealing device mounted on the floating roof and equipped with an elastomeric blade which contacts the tank wall. It uses its own stiffness or other mechanical means to maintain contact with the tank wall.

(9) "Gas service" means equipment which processes, transfers or contains an organic compound or mixture of organic compounds in the gaseous phase.

(10) "Internal floating roof" means a cover or roof in a fixed roof tank which rests upon and is supported by the petroleum liquid being contained and is equipped with a closure seal or seals to close the space between the roof edge and tank shell.

(11) "Liquid-mounted primary seal" means a seal constructed of an elastomeric coated fabric envelope and mounted onto the floating roof in such a manner that it touches the surface of the stored liquid.

(12) "Liquid service" means equipment which processes, transfers or contains an organic compound or mixture of organic compounds in the liquid phase.

(13) "Maximum true vapor pressure" means the equilibrium partial pressure exerted by the stored VOL, at the temperature equal to the highest calendar-month average of the VOL storage temperature for VOL's stored above or below the ambient temperature or at the local maximum monthly average temperature as reported by the national weather service for VOL's stored at the ambient temperature, as determined:

(a) In accordance with methods described in American petroleum institute bulletin 2517, "Evaporation Loss From External Floating Roof Tanks";

(b) As obtained from standard reference texts;

(c) As determined by ASTM method D2879-83; or

(d) Any other method approved by the agency.

(14) "Mechanical shoe primary seal" means a seal constructed of metal sheets (shoes) which are joined together to form a ring, springs or levers which attach the shoes to the floating roof and hold the shoes against the tank wall, and a coated fabric which is suspended from the shoes to the floating roof.

(15) "Petroleum liquids" means crude oil, condensate, and any finished or intermediate products manufactured or extracted in a petroleum refinery.

(16) "Petroleum refinery" means any facility engaged in producing gasoline, kerosene, distillate fuel oils, residual fuel oils, lubricants, or other products through distillation of crude oil, or through redistillation, cracking, extraction, or reforming of unfinished crude oil derivatives.

(17) "Process unit turnaround" means a work practice or operational procedure that stops production from a refinery unit or part of a refinery unit. An unscheduled work practice or operational procedure that stops production from a refinery unit or part of a refinery unit for less than twenty-four hours is not a process unit turnaround. The use of spare equipment and technically feasible bypassing of equipment without stopping production are not process unit turnarounds.

(18) "Refinery fuel gas" means any gas which is generated by a petroleum refinery process unit and which is combusted, including any gaseous mixture of natural gas and fuel gas.

(19) "Refinery unit" means equipment assembled to produce intermediate or final products from crude oil, unfinished crude oil derivatives, or other intermediates. A refinery unit can operate independently if supplied with sufficient feed or raw materials and sufficient storage facilities for the product.

(20) "Rim-mounted secondary seal" means a continuous sealing device located over the primary seal, mounted on the floating roof and extended to the tank wall. This device is not a weather shield.

(21) "Shoe-mounted secondary seal" means a continuous sealing device extending from the top of the shoe (see the definition of mechanical shoe primary seal) to the tank wall.

(22) "True vapor pressure" means the equilibrium partial pressure exerted by a petroleum liquid as determined in accordance with methods described in American petroleum institute publication 2517, "Evaporation Loss from External Floating-Roof Tanks."

(23) "Vacuum producing system" means any reciprocating, rotary, or centrifugal blower or compressor, or any jet ejector or device that takes suction from a pressure below atmospheric and discharges against atmospheric pressure.

(24) "Valves not externally regulated" means valves that have no external controls, such as in-line valves.

(25) "Vapor-mounted primary seal" means a seal constructed of an elastomeric coated fabric envelope and mounted onto the floating roof in such a manner that it does not touch the surface of the stored liquid.

(26) "Volatile organic liquid" or "VOL" means any organic liquid which can emit VOCs as defined in this rule.

(27) "Wastewater separator" means a device in which oil- contaminated water is skimmed to remove the floating oil prior to the discharge or further treatment of the water.

(28) "Weather shield" means a device which is attached to a floating roof to protect the fabric of a liquid-mounted or vapor-mounted primary seal from weather and debris, thereby generally providing a longer primary seal life. The device is usually of leaf-type construction and has numerous radial joints to allow for roof movement or irregularities in the tank wall.

(F) As used in paragraph (N) of rule 3745-21-09 of the Administrative Code (pertaining to the use of cutback asphalts and emulsified asphalts in road construction and maintenance) and in rule 3745-21-04 of the Administrative Code:

(1) "Asphalt" means a dark brown to black cement-like material (solid, semisolid, or liquid in consistency) in which the predominating constituents are bitumens which occur in nature as such or which are obtained as residue in refining petroleum.

(2) "Asphalt paving mixture" means a mixture of mineral aggregate and cutback asphalt, emulsified asphalt, or other asphaltic material.

(3) "Cutback asphalt" means a mixture of asphalt and petroleum solvents (distillates), produced by blending those materials or by distilling petroleum.

(4) "Dense-graded mix" means an asphalt paving mixture in which the air voids are less than ten per cent when compacted, as determined by ASTM D3203-05.

(5) "Emulsified asphalt" means an emulsion of water and asphalt which may also contain emulsifying agents, special additives, and petroleum solvents (distillates).

(6) "Maintenance mix" means an asphalt paving mixture for patching holes, depressions, and distressed areas in existing pavements.

(7) "Open-graded mix" means an asphalt paving mixture in which the air voids are equal to or greater than ten per cent when compacted, as determined by ASTM D3203-05.

(8) "Prime coat" means an application of low-viscosity cutback asphalt or emulsified asphalt to an absorptive surface, designed to penetrate, bond and stabilize the existing surface and to promote adhesion between it and the construction course that follows.

(G) As used in paragraph (O) of rule 3745-21-09 of the Administrative Code (pertaining to solvent metal cleaning) and in rules 3745-21-04 and 3745-21-10 of the Administrative Code:

(1) "Cold cleaner" means a batch-operated device that employs a solvent for cleaning and removing soils from metal surfaces by spraying, brushing, flushing, agitation or immersion while maintaining the solvent below its boiling point. Wipe cleaning is not included in this definition.

(2) "Conveyorized degreaser" means a continuous-operated device for cleaning and removing soils from metal surfaces by the use of either non-vaporized or vaporized solvents.

(3) “Electronic component” means all portions of an electronic assembly, including, but not limited to, circuit board assemblies, printed wire assemblies, printed circuit boards, soldered joints, ground wires, bus bars, and associated electronic component manufacturing equipment such as screens and filters.

(4) "Freeboard height" means:

(a) For a cold cleaner, the distance from the solvent surface to the top edge of the degreaser tank; and

(b) For an open top vapor degreaser, the distance from the top of the vapor zone to the top of the degreaser tank.

(5) "Freeboard ratio" means the freeboard height divided by the width of the degreaser air/solvent area. The same units of measurement should be used for all dimensions.

(6) "Open top vapor degreaser" means a batch-operated device for cleaning and removing soils from metal surfaces by condensing hot solvent vapor on the colder metal parts.

(7) "Solvent" means any VOC which is liquid at standard conditions and which is used as a cleaning agent.

(8) "Solvent metal cleaning" means a process that employs a solvent for cleaning and removing soils from metal surfaces.

(H) As used in paragraphs (P), (Q), (R), (V), (GG), and (DDD) of rule 3745-21-09 of the Administrative Code (pertaining to bulk gasoline plants, bulk gasoline terminals, gasoline dispensing facilities, and gasoline tank trucks) and in rules 3745-21-04 and 3745-21-10 of the Administrative Code:

(1) "Bottom filling" means the filling of a delivery vessel through an opening that is flush with the bottom of the delivery vessel's compartment.

(2) "Bulk gasoline plant" means a gasoline storage and distribution facility which receives gasoline primarily via delivery vessel, stores it in one or more stationary tanks, and subsequently dispenses it via delivery vessel.

(3) "Bulk gasoline terminal" means a gasoline storage and distribution facility which receives gasoline primarily via pipeline, ship, or barge; stores it in one or more stationary tanks; and subsequently dispenses it primarily via delivery vessel.

(4) "CARB certification" and "CARB certified" means:

(a) Subject to executive orders, approval letters, equipment advisories, and equivalent test procedures issued by California air resources board for phase I and phase II vapor control systems, parts, components, and test procedures used at gasoline dispensing facilities as follows:

(i) Issued on or before March 31, 2001 under pre-enhanced vapor recovery (pre-EVR) standards and certification procedures and issued after March 31, 2001 as a correction or revision, not related to enhanced vapor recovery (EVR) standards, of phase I and phase II vapor control systems, parts, components, and test procedures previously approved under pre-EVR standards, however, gasoline dispensing facilities in Ohio shall not be subject to any provision or statement that specifies an expiration or decertification due to EVR standards and certification procedures; or

(ii) Issued after March 31, 2001 under EVR standards and certification procedures for parts and components to be used in conjunction with pre-EVR systems, however, gasoline dispensing facilities in Ohio shall not be subject to any provision or statement that specifies an expiration or decertification due to EVR standards and certification procedures.

Additionally, where an owner or operator of a gasoline dispensing facility elects to use phase I or phase II vapor control systems, parts, components, or test procedures subject to executive orders, approval letters, equipment advisories, and equivalent test procedures issued by California air resources board under EVR standards and certification procedures, "CARB certification" and "CARB certified" shall also mean such executive orders, approval letters, equipment advisories, and equivalent test procedures issued by California air resources board under EVR standards and certification procedures. (Executive orders that begin with "G" generally refer to pre-EVR systems, but may include provisions or statements on expiration or decertification due to EVR standards. Executive orders that begin with "VR" generally refer to EVR systems.)

(b) Subject to executive orders, approval letters, equipment advisories, and equivalent test procedures issued by California air resource board that become effective for portable fuel containers and spouts on or after July 1, 2007.

(5) "E85" means a fuel blend nominally consisting of eighty five per cent ethanol and fifteen per cent gasoline that meets the requirements of ASTM D5798-99(2004) for fuel ethanol.

(6) "Delivery vessel" means a tank truck, a tank equipped trailer, a railroad tank car, or other mobile source, except ship or barge, equipped with a storage tank used for the transport of gasoline from a source of supply to stationary tanks at a gasoline dispensing facility or bulk gasoline plant.

(7) "External floating roof" means a storage vessel cover in an open top tank consisting of a double deck or pontoon single deck which rests upon and is supported by the petroleum liquid being contained and is equipped with a closure seal or seals to close the space between the roof edge and tank shell.

(8) "Gasoline" means any petroleum distillate which is used as a motor fuel and has a Reid vapor pressure of 4.0 pounds or greater.

(9) "Gasoline dispensing facility" means any site where gasoline is dispensed to motor vehicle gasoline tanks from stationary storage tanks.

(10) "Gasoline dispensing pump" means an individual unit at a gasoline dispensing facility with a dispensing nozzle where a specific grade of gasoline is dispensed to motor vehicle gasoline tanks.

(11) "Gasoline tank truck" means any truck or trailer equipped with a storage tank which is used for the transport of gasoline to a stationary storage tank at a gasoline dispensing facility, bulk gasoline plant or bulk gasoline terminal.

(12) "Independent small business marketer" means any owner of a gasoline dispensing facility engaged in the marketing of gasoline who would be required to pay for procurement and installation of a vapor control system pursuant to paragraph (DDD) of rule 3745-21-09 of the Administrative Code, except any owner that:

(a) Is a refiner;

(b) Controls, is controlled by, or is under common control with a refiner;

(c) Is otherwise directly or indirectly affiliated (as determined under the regulations of the USEPA) with a refiner or with a person who controls, is controlled by, or is under a common control with a refiner (unless the sole affiliation referred to herein is by means of a supply contract or an agreement or contract to use as a trademark, trade name, service mark, or other identifying symbol or name owned by such refiner or any such person); or

(d) Receives less than fifty per cent of his annual income from refining or marketing of gasoline.

For purposes of this definition, the term "refiner" shall not include any refiner whose total refinery capacity (including the refinery capacity of any person who controls, is controlled by, or is under common control with, such refiner) does not exceed sixty-five thousand barrels per day, and the term "control" of a corporation means ownership of more than fifty per cent of its stock.

(13) "Internal floating roof" means a cover or roof in a fixed roof tank which rests upon and is supported by the petroleum liquid being contained and is equipped with a closure seal or seals to close the space between the roof edge and tank shell.

(14) "Reid vapor pressure" means the absolute vapor pressure of volatile crude oil and volatile nonviscous petroleum liquids except liquefied petroleum gases as determined by ASTM D6897-03a.

(15) "Submerged fill pipe" means any fill pipe the discharge opening of which is entirely submerged when the liquid level is six inches above the bottom of the tank, or when applied to a tank which is loaded from the side, shall mean any fill pipe the discharge opening of which is entirely submerged when the liquid level is eighteen inches above the bottom of the tank.

(16) "Top submerged filling" means the filling of a delivery vessel by means of a fill pipe which descends through an open hatch on the top of the delivery vessel to within six inches of the bottom of the delivery vessel's compartment.

(17) "Topping off" means attempting to pump additional gasoline into a motor vehicle fuel tank after the dispensing nozzle has shut off automatically because the tank is full.

(18) "Ullage" means the maximum storage tank capacity, in gallons, minus the gallons of gasoline present in the tank.

(19) "Vapor balance system" means a combination of pipes or hoses which create a closed system between the vapor spaces of an unloading tank and a receiving tank such that vapors displaced from the receiving tank are transferred to the tank being unloaded.

(20) "Vapor collection system" means a vapor transport system which forces vapors from a delivery vessel or storage tank into a vapor control system.

(21) "Vapor control system" means control equipment designed to recover or incinerate organic compounds received from the vapor collection system.

(22) "Vapor tight" means free of any vapor leaks to the extent possible based upon good engineering design and practice.

(I) As used in paragraph (W) of rule 3745-21-09 of the Administrative Code (pertaining to synthesized pharmaceutical manufacturing facilities) and in rule 3745-21-04 of the Administrative Code:

(1) "Production equipment exhaust system" means a device for collecting and directing out of the work area any fugitive emissions of organic compounds from openings on reactors, centrifuges and other vessels for the purpose of protecting workers from excessive exposure to such emissions.

(2) "Surface condenser" means a device which cools a gas stream to a temperature at which vapors are removed by means of condensation, where the coolant does not directly contact the condensed vapors.

(3) "Synthesized pharmaceutical manufacturing facility" means a facility in which drugs are produced by means of chemical synthesis.

(J) As used in paragraph (X) of rule 3745-21-09 of the Administrative Code (pertaining to rubber tire manufacturing facilities) and in rules 3745-21-04 and 3745-21-10 of the Administrative Code:

(1) "Bead dipping" means the dipping of an assembled tire bead into a solvent based cement.

(2) "Capture system" means any device or combination of devices designed to contain, collect, and route VOC vapors released from an operation at a rubber tire manufacturing facility.

(3) "Control system" means any device or combination of devices designed to recover or incinerate VOC vapors received from a capture system.

(4) "Green tires" means assembled tires before molding and curing have occurred.

(5) "Green tire spraying" means the spraying of green tires, both inside and outside, with release compounds which help remove air from the tire during molding and prevent the tire from sticking to the mold after curing.

(6) "Recapped tread stock" means vulcanized or unvulcanized rubber which is used for recapping tire carcasses and which is delivered to a recapping facility with a cement coating on one side.

(7) "Rubber tire manufacturing facility" means a facility in which rubber tires or recapped tread stock are manufactured on a mass production basis.

(8) "Tread end cementing" means the application of a solvent based cement to the tire tread ends.

(9) "Undertread cementing" means the application of a solvent based cement to the underside of a tire tread.

(K) As used in paragraphs (AA) and (BB) of rule 3745-21-09 of the Administrative Code (pertaining to dry cleaning facilities) and in rules 3745-21-04 and 3745-21-10 of the Administrative Code:

(1) "Cartridge filter" means a discrete filter unit containing one or more disposable cartridges that contain both filter paper and activated carbon which trap and remove contaminants from the cleaning solvent.

(2) "Dry cleaning facility" means a facility engaged in the cleaning of articles of fabric in an essentially nonaqueous cleaning solvent by means of one or more washes in solvent, extraction of excess solvent by spinning, and drying by tumbling in an air stream. The facility includes, but is not limited to, washers, dryers, filtration and purification systems, waste disposal systems, holding tanks, pumps, and attendant piping and ductwork.

(3) "Dryer" means a machine used to remove cleaning solvent from articles, after washing and removing of excess cleaning solvent.

(4) "Manufacturer's rated capacity" means the capacity per load that is typically found on the manufacturer's name plate located on the equipment or in the manufacturer's equipment specifications.

(5) "Perchloroethylene dry cleaning facility" means a dry cleaning facility that uses perchloroethylene as the cleaning solvent.

(6) "Petroleum dry cleaning facility" means a dry cleaning facility that uses petroleum solvent as the cleaning solvent.

(7) "Petroleum solvent" means a material that is produced by petroleum distillation, that is composed mainly of hydrocarbons having a range of eight to twelve carbon atoms per molecule, and that exists as a liquid under standard conditions.

(8) "Solvent filter" means a discrete filter unit containing a porous medium that traps and removes contaminants from the cleaning solvent.

(9) "Solvent recovery dryer" means a class of dryers that employ a condenser to condense and recover solvent vapors evaporated in a closed-loop stream of heated air.

(L) As used in paragraph (CC) of rule 3745-21-09 of the Administrative Code (pertaining to continuous, polystyrene resin manufacturing process) and in rule 3745-21-04 of the Administrative Code:

(1) "Continuous, polystyrene resin manufacturing process" means a process unit in which polystyrene resin is produced by the continuous polymerization or co-polymerization of styrene monomer.

(2) "Material recovery section" means the section of the continuous, polystyrene resin manufacturing process that includes the vacuum devolatizer and its associated condenser and vacuum system, and the styrene recovery distillation column and its associated condenser and vacuum system.

(3) "Styrene recovery distillation column" means a distillation column used to separate and recover styrene monomer from the vacuum devolatizer stream containing unreacted styrene monomer and byproducts.

(4) "Vacuum devolatizer" means a device in which the products from a polystyrene reactor are separated into a stream containing unreacted styrene monomer and byproducts and a stream containing molten polystyrene.

(M) As used in paragraph (DD) of rule 3745-21-09 of the Administrative Code (pertaining to leaks from process units that produce organic chemicals) and in rules 3745-21-04 and 3745-21-10 of the Administrative Code:

(1) "Btu/scf" means British thermal unit(s) per standard cubic feet.

(2) "Closed vent system" means a system that is not open to the atmosphere and that is composed of piping, connections, and if necessary, flow inducting devices that transport gas or vapor from a piece or pieces of equipment to control equipment.

(3) "Connector" means a flanged, screwed, welded, or other joined fitting used to connect two pipelines or a pipeline and a piece of process equipment.

(4) "Distance piece" means an open or enclosed casing through which the piston rod travels, separating the compressor cylinder from the crankcase.

(5) "Double block and bleed system" means two block valves connected in series with a bleed valve or line that can vent the line between the two block valves.

(6) "Equipment" means a pump, compressor, pressure relief device, sampling connection system, openended valve or line, valve, flange, connector, closed vent system, and any other device or system within a process unit.

(7) "First attempt at repair" means to take rapid action for the purpose of stopping or reducing leakage from equipment.

(8) (Reserved)

(9) "In gas/vapor service" means that the piece of equipment contains or contacts process fluid that is in the gaseous state at the operating conditions.

(10) "In heavy liquid service" means that the piece of equipment is not in gas/vapor service or in light liquid service.

(11) "In light liquid service" means that the piece of equipment contains or contacts process fluid that meets the conditions specified in paragraph (O)(3) of rule 3745-21-10 of the Administrative Code.

(12) "Insitu sampling system" means a nonextractive sampler or an in-line sampler.

(13) "In vacuum service" means that the piece of equipment is operating at an internal pressure that is at least 0.7 pound per square inch below ambient pressure.

(14) "In VOC service" means that the piece of equipment contains or contacts a process fluid that is at least ten per cent VOC by weight.

(15) "Liquids dripping" means any visible leakage from the seal including spraying, misting, clouding, and ice formation.

(16) "Open-ended valve or line" means any valve having one side of the valve seat in contact with the process fluid and one side open to the atmosphere, either directly or through open piping, but excluding any pressure relief valve.

(17) "Ppmv" means parts per million by volume.

(18) "Pressure release" means the emission of materials resulting from system pressure being greater than set pressure of the pressure relief device.

(19) "Pressure relief device" means a pressure relief valve or a rupture disk.

(20) "Pressure relief valve" means any valve designed to open when the process pressure exceeds a set pressure, allowing the release of vapors or liquids until the process pressure is reduced to its normal operating level.

(21) "Process unit" means equipment assembled to produce, as intermediate or final products, one or more organic chemicals. A process unit can operate independently if supplied with sufficient feed or raw materials and sufficient storage facilities for the product.

(22) "Process unit shutdown" means a work practice or operational procedure that stops production for a process unit or part of a process unit. An unscheduled work practice or operational procedure that stops production from a process unit or part of a process unit for less than twenty-four hours is not a process unit shutdown. The use of spare equipment and technically feasible bypassing of equipment without stopping production are not process unit shutdowns.

(23) "Repaired" means that leaking equipment are successfully adjusted, or otherwise altered, in order to eliminate the leak.

(24) "Rupture disk" means a disk made of a material that ruptures when the process pressure exceeds a set pressure, allowing the release of vapors or liquids until the process pressure is reduced to ambient pressure.

(25) "Sensor" means a device that measures a physical quantity or the change in a physical quantity such as temperature, flow rate, "pH," or liquid level.

(N) As used in paragraph (EE) of rule 3745-21-09 of the Administrative Code (pertaining to air oxidation processes that produce organic chemicals) and in rule 3745-21-04 of the Administrative Code:

(1) "Air oxidation process" means a unit operation or process wherein organic chemicals are produced by reacting one or more compounds with oxygen which is supplied as air or air enriched with oxygen.

(2) "Process vent stream" means any gas stream within the air oxidation process that vents to the ambient air.

(O) (Reserved).

(P) As used in paragraph (LL) of rule 3745-21-09 of the Administrative Code (pertaining to "The Lubrizol Corporation"):

(1) "Air-bearing vent stream" means a process vent stream that contains a mixture of air and organic vapors.

(2) "Reactor process" means reactor vessel equipment and associated material recovery equipment that are assembled to produce an organic chemical.

(3) "Reactor process vent stream" means any gas stream within the reactor process that is vented to the ambient air, an enclosed combustion device, or a flare.

(4) "Wastewater separator" means a device in which contaminated water is skimmed to remove the floating organic materials prior to the discharge or further treatment of the water.

(Q) As used in paragraph (MM) of rule 3745-21-09 of the Administrative Code (pertaining to "PPG Industries, Inc."):

(1) "Control system" means any device or combination of devices designed to recover or incinerate VOC vapors received from a capture system.

(2) "Grinding mill" means a device used to grind or disperse pigment throughout a paint.

(3) "Paint manufacturing facility" means a facility engaged in the production of paints and includes, but is not limited to, mixing tanks, paint transfer equipment, grinding mills, equipment cleaning stations, and process tanks for paint tinting and thinning.

(R) As used in paragraph (NN) of rule 3745-21-09 of the Administrative Code (pertaining to "Midwest Mica and Insulation Company"):

(1) "Mica coating or laminating line" means a series of one or more coating applicators and any associated flash-off areas, drying areas, and ovens wherein an adhesive coating or binder is applied to mica.

(2) "Oven" means a chamber within which heat is used for one or more of the following purposes: dry, bake, cure or polymerize an adhesive coating or binder.

(S) As used in paragraph (OO) of rule 3745-21-09 of the Administrative Code (pertaining to "Armco Inc. - Middletown Works"):

(1) "Aluminum coating operation" means an operation wherein a layer of aluminum is applied to the surface of metal coil by immersion into a bath of molten aluminum.

(2) "Anti-galling material" means a coating material applied directly to metal coil for the purpose of protecting the surface of the coil from damage during shipment.

(3) "Metal coil treatment operation" means any operation where coating materials are applied directly to metal coil for the purpose of lubrication, rust prevention, or galling prevention.

(4) "Rolling oil" means a coating material which is applied directly to metal coil, for the purpose of lubrication, prior to processing at any temper mill.

(5) "Rust preventive oil" means a coating material which is applied directly to metal coil after processing at any temper mill or shear.

(T) As used in paragraph (YY) of rule 3745-21-09 of the Administrative Code (pertaining to "PMC Specialties Group"), paragraph (ZZ) of rule 3745-21-09 of the Administrative Code (pertaining to "Firestone Synthetic Rubber & Latex Company"), and paragraph (BBB) of rule 3745-21-09 of the Administrative Code (pertaining to "BF Goodrich Company Akron Chemical Plant"):

(1) "Air-bearing vent stream" means a process vent stream that contains a mixture of air and organic vapors.

(2) "Reactor process" means reactor vessel equipment and associated material recovery equipment that are employed to produce an organic chemical.

(3) "Reactor process vent stream" means any gas stream within the reactor process that is vented to control equipment or to the ambient air.

(U) As used in rule 3745-21-12 of the Administrative Code:

Except as otherwise provided in this paragraph, the definitions in rule 3745-15-01 of the Administrative Code and paragraph (B) of rule 3745-21-01 of the Administrative Code shall apply to rule 3745-21-12 of the Administrative Code (pertaining to "Control of Volatile Organic Compound Emissions from Commercial Bakery Oven Facilities").

(1) "Baker's per cent" means, for a given ingredient, the weight of that ingredient per 100 pounds of flour, expressed as a percentage.

(2) "Bakery oven" means an oven which bakes yeast-leavened products.

(3) "Commercial bakery oven facility" means an establishment that is primarily engaged in the manufacture, for sale at wholesale or retail, of fresh or frozen bread, bread-type rolls, or dry bakery products, including biscuits, crackers, or cookies, in which the products are made using yeast leavening.

(4) "Purge stack" means a bakery oven stack used only for exhausting residual gases from the bakery oven during burner ignition.

(5) "Spike yeast" means any yeast added to the dough beyond the initial yeast added to the dough.

(6) "Spiking time" means the elapsed time between the addition of the spike yeast to the dough and the placement of the dough into the oven.

(7) "Subject to this rule" means the commercial bakery oven facility has met the applicability criteria of paragraph (A)(1) of rule 3745-21-12 of the Administrative Code and is subject to the requirements of paragraphs (D) to (I) of rule 3745-21-12 of the Administrative Code.

(8) "Total uncontrolled potential to emit" means the capability at maximum capacity of a commercial bakery oven facility to emit VOC under its physical and operational design, excluding air pollution control equipment. Any physical or operational limitation on the capacity of the commercial bakery oven facility to emit VOC, including restrictions on the hours of operation or on the type or amount of material processed, but not including restrictions pertaining to air pollution control equipment, shall be treated as part of its physical and operational design if the limitation or the effect it would have on VOC emissions is federally enforceable.

(9) "Uncontrolled bakery oven" means a bakery oven in which the oven's VOC emissions are not vented to a VOC emission control device.

(10) "Yeast action time" means the elapsed time between the initial addition of the yeast and the placement of the dough into the oven.

(V) As used in rule 3745-21-13 of the Administrative Code:

Except as otherwise provided in this paragraph, the definitions in rule 3745-15-01 of the Administrative Code and paragraph (B) of rule 3745-21-01 of the Administrative Code shall apply to rule 3745-21-13 of the Administrative Code (pertaining to "Control of Volatile Organic Compound Emissions from Reactors and Distillation Units Employed in SOCMI Chemical Production").

(1) "Batch operation" means a noncontinuous operation in which a discrete quantity or batch of feed is charged into a unit operation within a process unit and distilled or reacted at one time. Batch operation includes noncontinuous operations in which the equipment is fed intermittently or discontinuously. Addition of raw material and withdrawal of product do not occur simultaneously in a batch operation. After each batch operation, the equipment is generally emptied before a fresh batch is started.

(2) "Boiler" means any enclosed combustion device that extracts useful energy in the form of steam and is not an incinerator or a process heater.

(3) "Btu" means British thermal unit.

(4) "Car-seal" means a seal that is placed on a device that is used to change the position of a valve (e.g., from opened to closed) in such a way that the position of the valve cannot be changed without breaking the seal.

(5) "Combustion device" means an individual unit of equipment, such as an incinerator, flare, boiler, or process heater, used for combustion of a vent stream discharged from the process vent.

(6) "Compliance test" means the collection of data resulting from the execution of a test method used to demonstrate compliance with an emission limit or control requirement based on the average of three runs.

(7) "Continuous record" means documentation, either in hard copy or computer readable form, of data values measured at least once every fifteen minutes and recorded as follows:

(a) Each measured value; or

(b) Block average values for fifteen-minute or shorter periods calculated from all measured data values during each period or at least one measured data value per minute if measured more frequently than once per minute; or

(c) Values under an alternative recordkeeping that is implemented in accordance with paragraph (H)(8) of rule 3745-21-13 of the Administrative Code.

(8) "Continuous recorder" means a data recording device that either records an instantaneous data value at least once every fifteen minutes or records fifteen-minute or more frequent block average values.

(9) "Control device" means any combustion device or recapture device. A recovery device is not considered a control device.

(10) "Distillation operation" means an operation separating one or more feed stream(s) into two or more exit stream(s), each exit stream having component concentrations different from those in the feed stream(s). The separation is achieved by the redistribution of the components between the liquid and vapor-phase as they approach equilibrium within the distillation unit.

(11) "Distillation unit" means a device or vessel in which distillation operations occur, including all associated internals (such as trays or packing) and accessories (such as reboiler, condenser, vacuum pump, steam jet, etc.), plus any associated recovery system.

(12) "Engineering assessment" means best estimate of a vent stream parameter (e.g., flow rate, VOC concentration, VOC emission rate, net heating value, etc.) that includes, but is not limited to, the following:

(a) Previous test results provided the tests are representative of current operating practices at the process unit.

(b) Bench-scale or pilot-scale test data representative of the process under representative operating conditions.

(c) Maximum flow rate, VOC emission rate limit, VOC concentration limit, or net heating value limit specified or implied within a permit applicable to the process vent.

(d) Design analysis based on accepted chemical engineering principles, measurable process parameters, or physical or chemical laws or properties. Examples of analytical methods include, but are not limited to:

(i) Use of material balances based on process stoichiometry to estimate maximum VOC concentrations.

(ii) Estimation of maximum flow rate based on physical equipment design such as pump or blower capacities.

(iii) Estimation of VOC concentrations based on saturation conditions.

(iv) Estimation of maximum expected net heating value based on the vent stream concentration of each organic compound or, alternatively, as if all organic compounds in the vent stream were the organic compound with the highest heating value.

(13) "Flame zone" means the portion of the combustion chamber in a boiler or process heater occupied by the flame envelope.

(14) "Flow indicator" means a device that indicates whether gas flow is present in a vent stream.

(15) "Fuel gas system" means the off-site and on-site piping and flow and pressure control system that gathers gaseous stream(s) generated by on-site operations, may blend them with other sources of gas, and transports the gaseous stream for use as fuel gas in combustion devices or in-process combustion equipment such as furnaces and gas turbines either singly or in combination.

(16) "Group 1 process vent" means a process vent for which a control device is required due to the TRE index value being less than or equal to 1.0. Also, monitoring of the control device is required, except when the control device is a boiler or process heater specified under paragraph (F)(1)(b) or (F)(1)(c) of rule 3745-21-13 of the Administrative Code.

(17) "Group 2A process vent" means a process vent from a recovery system for which monitoring of the recovery system is required due to the TRE index value

being less than or equal to 4.0, but a control device is not required due to the TRE index value being greater than 1.0.

(18) "Group 2B process vent" means a process vent for which a control device and monitoring are not required due to any of the following:

(a) The VOC concentration is less than five hundred ppmv; or

(b) The flow rate is less than 0.30 scfm; or

(c) The TRE index value is greater than 1.0 for a vent stream not from a recovery system; or

(d) The TRE index value is greater than 4.0 for a vent stream from a recovery system.

(19) "Halogenated vent stream" means a vent stream determined to have a mass emission rate of halogen atoms contained in organic compounds equal to or greater than 0.99 pound per hour.

(20) "Halogens and hydrogen halides" means hydrogen chloride (HCl), chlorine (Cl_2), hydrogen bromide (HBr), bromine (Br_2), and hydrogen fluoride (HF).

(21) "Incinerator" means an enclosed combustion device that is used for destroying organic compounds. Auxiliary fuel may be used to heat waste gas to combustion temperatures. Any energy recovery section present is not physically formed into one manufactured or assembled unit with the combustion section; rather, the energy recovery section is a separate section following the combustion section and the two are joined by ducts or connections carrying flue gas. The above energy recovery section limitation does not apply to an energy recovery section used solely to preheat the incoming vent stream or combustion air.

(22) "Monitoring device" means the total equipment used to measure and record (if applicable) process parameters.

(23) "Nonhalogenated vent stream" means a vent stream that is not a halogenated vent stream.

(24) "Organic monitoring device" means a device used to indicate the concentration level of organic compounds based on a detection principle such as infrared, photoionization, or thermal conductivity.

(25) "Permit" means a permit issued by the director pursuant to Chapter 3745-31 or 3745-77 of the Administrative Code.

(26) "Ppmv" means parts per million by volume.

(27) "Primary fuel" mean the fuel that provides the principal heat input to the device. To be considered primary, the fuel must be able to sustain operation without the addition of other fuels.

(28) "Process heater" means a device that transfers heat liberated by burning fuel to fluids contained in tubes, including all fluids except water that is heated to produce steam.

(29) "Process unit" means equipment assembled and connected by pipes or ducts to produce, as a product (by-product, co-product, intermediate, or final product), one or more SOCMI chemicals. A process unit can operate independently if supplied with sufficient feed or raw materials and sufficient product storage facilities.

(30) "Process vent" means the point of discharge to the atmosphere (or the point of entry into a control device, if any) of a gas stream from a distillation unit or reactor. Gas streams excluded from this definition are the following:

(a) A relief valve discharge.

(b) A leak from any device or equipment within a reactor or distillation unit (e.g., a leak from a pump, compressor, relief valve, or sampling system).

(c) A gas stream going to a fuel gas system.

(d) A gas stream exiting a control device used to comply with rule 3745-21-13 of the Administrative Code.

(e) A gas stream transferred to other processes (on-site or off-site) for reaction or other use in another process (i.e., for chemical value as a product, isolated intermediate, by-product, or co-product, or for heat value).

(f) A gas stream transferred for fuel value (i.e., net positive heating value), use, reuse, or for sale for fuel value, use, or reuse.

(g) A gas stream exiting an analyzer.

(31) "Product" means any SOCMI chemical which is produced for sale as a final product as that chemical, or for use in the production of other chemicals or compounds. By-products, co-products, and intermediates are considered to be products.

(32) "Reactor" means a device or vessel in which reactor processes occur, including the product separator, any associated vacuum pump or steam jet, and any associated recovery system.

(33) "Reactor process" means a process in which one or more chemicals, or reactants other than air, are combined or decomposed in such a way that their molecular structures are altered and one or more new organic compounds are formed.

(34) "Recapture device" means an individual unit of equipment capable of and used for recovering chemicals from a gas stream, but not normally or primarily for use, reuse, or sale. For example, a recapture device may recover chemicals primarily for disposal or for air pollution control. Recapture devices include, but are not limited to, absorbers, carbon adsorbers, and condensers.

(35) "Recovery device" means an individual unit of equipment, such as an absorber, carbon adsorber, or condenser, capable of and used for the purpose of recovering chemicals from a gas stream for fuel value (i.e., net positive heating value), use, reuse, or for sale for fuel value, use, or reuse.

(36) "Recovery system" means an individual recovery device or series of such devices applied to the same vent stream.

(37) "Relief valve" means a valve used only to release an unplanned, nonroutine discharge. A relief valve discharge results from an operator error, a malfunction such as a power failure or equipment failure, or other unexpected cause that requires immediate venting of gas from process equipment in order to avoid safety hazards or equipment damage.

(38) "Run" means the net period of time during which an emission sample is collected or a test method is conducted.

(39) "Scfm" means standard cubic feet per minute.

(40) "Sensor" means a device that measures a physical quantity or the change in a physical quantity, such as temperature, pressure, flow rate, pH, or liquid level.

(41) "Shutdown" means for purposes including, but not limited to, periodic maintenance, replacement of equipment, or repair, the cessation of operation of a reactor, distillation unit, or equipment required or used to comply with rule 3745-21-13 of the Administrative Code.

(42) "SOCMI chemical" means a chemical listed in "Control of Volatile Organic Compound Emissions from Reactor Processes and Distillation Operations Processes in the Synthetic Organic Chemical Manufacturing Industry, Appendix A List of Synthetic Organic Chemical Manufacturing Industry Chemicals, Table A-1 List of Synthetic Organic Chemical Manufacturing Industry Chemicals" in the column titled reactor and distillation CTG, EPA-450/4-91-031.

(43) "Specific gravity monitoring device" means a unit of equipment used to monitor specific gravity and having a minimum accuracy of +/- 0.02 specific gravity units.

(44) "Start-up" means the setting into operation of a reactor, distillation unit, or equipment required or used to comply with this rule. Start-up includes initial start-up, operation solely for testing equipment, and transitional conditions due to changes in product.

(45) "Steam jet ejector" means a steam nozzle that discharges a high-velocity jet across a suction chamber that is connected to the equipment to be evacuated.

(46) "Subject to this rule" means the reactor or distillation unit has met the applicability criteria of paragraph (A)(1) of rule 3745-21-13 of the Administrative Code.

(47) "Temperature monitoring device" means a unit of equipment used to monitor temperature and having a minimum accuracy of plus or minus one per cent of the temperature being monitored expressed in degrees Celsius or plus or minus 0.5 degree Celsius, whichever is greater.

(48) "Total organic compounds" or "TOC" means those compounds measured according to the procedures of USEPA method 18.

(49) "Total resource effectiveness index value" or "TRE index value" means a measure of the supplemental total resource requirement per unit reduction of VOC associated with a vent stream, based on vent stream flow rate, emission rate of VOC, net heating value, and corrosion properties (whether or not the vent stream contains halogenated compounds) as determined using the equation in paragraph (E)(8)(a) of rule 3745-21-13 of the Administrative Code. The TRE index is a decision tool used to determine if the annual cost of controlling a given gas stream is reasonable when considering the emissions reduction achieved.

(50) "TRE determination test" means the collection of data resulting from the execution of test methods used to demonstrate process vent flow rate and concentration, that are used to determine the process vent flow rate, net heating value, emission rates of TOC, VOC, and halogen atoms, each based on the average of three runs, for the determination of the TRE index value of a process vent.

(51) "Vent stream" means the gas stream flowing through the process vent.

(52) "Visible emission" means the observation of an emission of opacity or optical density above the threshold of vision.

(W) As used in rule 3745-21-14 of the Administrative Code:

Except as otherwise provided in this paragraph, the definitions in rule 3745-15-01 of the Administrative Code and paragraph (B) of rule 3745-21-01 of the Administrative Code shall apply to rule 3745-21-14 of the Administrative Code (pertaining to "Control of Volatile Organic Compound Emissions from Batch Operations").

(1) "Aggregate" means the summation of all process vents containing VOC within a process.

(2) "Batch operation" means a noncontinuous operation in which a discrete quantity or batch of feed is charged into a unit operation within a batch process train and processed at one time. Batch operation includes noncontinuous operations in which the equipment is fed intermittently or discontinuously. Addition of raw material and withdrawal of product do not occur simultaneously in a batch operation. After each batch operation, the equipment is generally emptied before a fresh batch is started.

(3) "Batch cycle" means a manufacturing event of an intermediate or product from start to finish in a batch process train.

(4) "Batch process train" means the collection of equipment (e.g., reactors, filters, dryers, distillation columns, extractors, crystallizers, blend tanks, neutralizer tanks, digesters, surge tanks and product separators) configured to produce a specific product or intermediate by a batch operation. A batch process train terminates at the point of storage or product handling of the product or intermediate being produced in the batch process train. Irrespective of the product being produced, a batch process train which is independent of other processes shall be considered a single batch process train for purposes this rule.

(5) "Boiler" means any enclosed combustion device that extracts useful energy in the form of steam.

(6) "Continuous recorder" means a data recording device that either records an instantaneous data value at least once every fifteen minutes or records fifteen-minute or more frequent block average values.

(7) "Control device" means any device or combination of devices designed to recover or destroy VOC vapors received from the process vents. A recovery device which is a required part of the process, for example, but not limited to, condensers operating under reflux conditions, is not a control device.

(8) "Emission event" shall be defined as a discrete period of venting that is associated with a unit operation. For example, a displacement of vapor resulting from the charging of a unit operation with VOC will result in a discrete emission event that will last through the duration of the charge and will have an average flow rate equal to the rate of the charge. The expulsion of expanded unit operation vapor space when the vessel is heated is also an emission event. Both of these examples of emission events and others may occur in the same unit operation during the course of the batch cycle. If the flow rate measurement for any discrete period of venting is zero, then such event is not an emission event for purposes of rule 3745-21-14 of the Administrative Code.

(9) "Flame zone" means the portion of the combustion chamber in a boiler occupied by the flame envelope.

(10) "Incinerator" means any enclosed combustion device that is used for destroying organic compounds. Auxiliary fuel may be used to heat waste gas to combustion temperatures. Any energy recovery section present is not physically formed into one section; rather, the energy recovery system is a separate section following the combustion section and the two are joined by ducting or connections that carry fuel gas.

(11) "MmHg" means millimeters of mercury.

(12) "Permit" means a permit issued by the director pursuant to Chapter 3745-31 or 3745-77 of the Administrative Code.

(13) "Ppmv" means parts per million by volume.

(14) "Process vent" means a vent gas stream that is discharged from a unit operation or multiple unit operations within the same batch process train that are manifolded together into a common header. A process vent begins at the inlet to the control device prior to mixing with vent gas streams from other process trains or unrelated operations, or in the absence of a control device, at the point of discharge to the atmosphere. Not included in this definition are exhaust streams from exhaust hood and building ventilation fans which are used to provide ventilation for workers and not to collect and discharge emissions from specific unit operations. Process vents exclude relief valve discharges, leaks from equipment, vents from storage tanks, vents from transfer or loading operations, and vents from wastewater.

(15) "Recovery device" means an individual unit of equipment, such as an absorber, carbon adsorber, or condenser, capable of and used for the purpose of recovering chemicals for use, reuse, or sale.

(16) "Recovery system" means an individual recovery device or series of such devices applied to the same vent stream.

(17) "Standard industrial classification code" or "SIC code" means a series of four-digit codes devised by the office of management and budget (OMB) of the federal government to classify establishments according to the type of economic activity in which they are engaged.

(18) "Scfm" means standard cubic feet per minute.

(19) "Subject to this rule" means the facility has met the applicability criteria of paragraph (A)(1) of rule 3745-21-14 of the Administrative Code, or the batch process train is at a facility that has met the applicability criteria of paragraph (A)(1) of rule 3745-21-14 of the Administrative Code.

(20) "Unit operation" means one or more pieces of process equipment used to make a single change to the physical or chemical characteristics of one or more process streams. Equipment used for these purposes includes, but is not limited to, reactors, filters, dryers, distillation columns, extractors, crystallizers, blend tanks, neutralizer tanks, digesters, surge tanks, and product separators.

(X) As used in rule 3745-21-15 of the Administrative Code:

Except as otherwise provided in this paragraph, the definitions in rule 3745-15-01 of the Administrative Code and paragraph (B) of rule 3745-21-01 of the Administrative Code shall apply to rule 3745-21-15 of the Administrative Code (pertaining to "Control of Volatile Organic Compound Emissions from Wood Furniture Manufacturing Operations").

(1) "Adhesive" means any chemical substance that is applied for the purpose of bonding two surfaces together other than by mechanical means. Products used on humans and animals, adhesive tape, contact paper, or any other product with an adhesive incorporated onto or in an inert substrate shall not be considered adhesives.

(2) "Aerosol adhesive" means an adhesive that is dispensed from a pressurized container as a suspension of fine solid or liquid particles in gas.

(3) "As applied" means the VOC and solids content of the coating that is actually used for coating the substrate. It includes the contribution of materials used for in-house dilution of the coating.

(4) "Basecoat" means a coat of colored material, usually opaque, that is applied before graining inks, glazing coats, or other opaque finishing materials, and is usually topcoated for protection.

(5) "Capture device" means a hood, enclosed room, floor sweep, or other means of collecting solvent emissions or other pollutants into a duct so that the pollutant can be directed to a control device such as an incinerator or carbon adsorber.

(6) "Capture efficiency" means the fraction of all organic vapors generated by a process that are directed to a control device.

(7) "Capture system" means one or more capture devices intended to collect emissions generated by a finishing operation in the use of finishing materials, both at the point of application and at subsequent points where emissions from the finishing materials occur, such as flashoff, drying, or curing. Multiple capture devices that collect emissions generated by a finishing operation are considered a single capture system.

(8) "Car-seal" means a seal that is placed on a device that is used to change the position of a valve (e.g., from opened to closed) in such a way that the position of the valve cannot be changed without breaking the seal.

(9) "Certified product data sheet" or "CPDS" means documentation furnished by a coating supplier or an outside laboratory that provides the VOC content in percent by weight, the solids content in per cent by weight, other contents that may be of interest in per cent by weight, and the density of a coating (finishing material or strippable stray booth material) or solvent, based on formulation data or measurement methods. For data based on a measurement method, the measurement method should be identified within the CPDS. The purpose of the CPDS is to assist the facility in demonstrating compliance with the emission limitations presented in paragraphs (D) and (E) of rule 3745-21-15 of the Administrative Code. Therefore, the VOC content should represent the maximum VOC emission potential of the coating or solvent. A CPDS includes, but is not limited to, technical data sheets, material specification sheets, material safety data sheets, and laboratory test reports pertaining to a coating or solvent.

(10) "Cleaning operations" means operations in which organic solvent is used to remove coating materials from equipment used in wood furniture manufacturing operations.

(11) "Coating" means a protective, decorative, or functional film applied in a thin layer to a surface. Such materials include, but are not limited to, paints, topcoats, varnishes, sealers, stains, washcoats, basecoats, enamels, inks, and temporary protective coatings. Aerosol spray paints used for touch-up and repair are not considered coatings under rule 3745-21-15 of the Administrative Code.

(12) "Coating operation" means those activities in which a coating is applied to a substrate and is subsequently air-dried, cured in an oven, or cured by radiation.

(13) "Compliant coating" means a finishing material or strippable spray booth material that meets the VOC content limits specified in paragraphs (D) and (E) of rule 3745-21-15 of the Administrative Code.

(14) "Continuous coater" means a finishing system that continuously applies finishing materials onto furniture parts moving along a conveyor. Finishing materials that are not transferred to the part are recycled to a reservoir. Several types of application methods can be used with a continuous coater including spraying, curtain coating, roll coating, dip coating, and flow coating.

(15) "Continuous compliance" means that the affected source is meeting the emission limitations and other requirements of the rule at all times and is fulfilling all monitoring and recordkeeping provisions of the rule in order to demonstrate compliance.

(16) "Continuous recorder" means a data recording device that either records an instantaneous data value at least once every fifteen minutes or records fifteen-minute or more frequent block average values.

(17) "Control device" means any equipment that reduces the quantity of an air pollutant that is emitted to the air. The device may destroy or secure the pollutant for subsequent recovery and includes, but is not limited to, thermal oxidizers, catalytic oxidizers, regenerative carbon adsorbers, and concentrators.

(18) "Control device efficiency" means the ratio of the pollutant released by a control device and the pollutant introduced to the control device.

(19) "Conventional air spray" means a spray coating method in which the coating is atomized by mixing it with compressed air and applied at an air pressure greater than ten pounds per square inch (gauge) at the point of atomization. Airless and air assisted airless spray technologies are not conventional air spray because the coating is not atomized by mixing it with compressed air. Electrostatic spray technology is also not considered conventional air spray because an electrostatic charge is employed to attract the coating to the workpiece.

(20) "Day" means a period of twenty-four consecutive hours beginning at midnight local time, or beginning at a time consistent with a facility's operating schedule.

(21) "Dip coater" means a finishing operation that applies finishing materials by means of dip coating onto furniture parts.

(22) "Emission" means the release or discharge, whether directly or indirectly, of VOC into the ambient air.

(23) "Enamel" means a coat of colored material, usually opaque, that is applied as a protective topcoat over a basecoat, primer, or previously applied enamel coat. In some cases, another finishing material may be applied as a topcoat over the enamel. Under rule 3745-21-15 of the Administrative Code, an enamel is a topcoat.

(24) "Finishing material" means a coating used in the wood furniture manufacturing industry. Such materials include, but are not limited to, stains, basecoats, washcoats, enamels, sealers, and topcoats. Under rule 3745-21-15 of the Administrative Code, adhesives and nonpermanent final finish materials shall not be considered finishing materials.

(25) "Finishing operation" means those operations in which a finishing material is applied to a substrate and is subsequently air-dried, cured in an oven, or cured by radiation.

(26) "Flow indicator" means a device that indicates whether gas flow is present in a vent stream.

(27) "Gluing operation" means those operations in which adhesives are used to join components, for example, to apply a laminate to a wood substrate or foam to fabric.

(28) "Monitoring device" means the total equipment used to measure and record (if applicable) process parameters.

(29) "Natural draft opening" means any opening in a room, building, or total enclosure that remains open during operation of the finishing operation and that is not connected to a duct in which a fan is installed. The rate and direction of the natural draft across such an opening is a consequence of the difference in pressures on either side of the wall or barrier containing the opening.

(30) "Noncompliant coating" means a finishing material or strippable spray booth material that has a VOC content greater than the VOC content limit specified in paragraphs (D) and (E) of rule 3745-21-15 of the Administrative Code.

(31) "Nonpermanent final finish material" means a material such as a wax, polish, nonoxidizing oil, or similar substance that must be periodically reapplied to a surface over its lifetime to maintain or restore the reapplied material's intended effect.

(32) "Operating parameter value" means a minimum or maximum value established for a control device, capture system, or process parameter that, if achieved by itself or in combination with one or more other operating parameter values, determines that an owner or operator has complied with an applicable emission limit.

(33) "Organic monitoring device" means a device used to indicate the concentration level of organic compounds based on a detection principle such as infrared, photoionization, or thermal conductivity.

(34) "Overall control efficiency" means the efficiency of a VOC emission control system, calculated as the product of the capture system and control device efficiencies, expressed as a percentage.

(35) "Permanent total enclosure" or "PTE" means a permanently installed enclosure that meets the criteria for a PTE in accordance with USEPA method 204 specified within paragraph (C)(3)(c) of rule 3745-21-10 of the Administrative Code, and that directs all the exhaust gases from the enclosure to a control device.

(36) "Permit" means a permit issued by the director pursuant to Chapter 3745-31 or 3745-77 of the Administrative Code.

(37) "Responsible official" has the meaning given to it in rule 3745-77-01 of the Administrative Code.

(38) "Sealer" means a finishing material used to seal the pores of a wood substrate before additional coats of finishing material are applied. Special purpose finishing materials that are used in some finishing systems to optimize aesthetics are not sealers.

(39) "Solids" means the nonvolatile portion of the coating that makes up the dry film.

(40) "Solvent" means a liquid used in a coating to dissolve or disperse constituents and/or to adjust viscosity. It evaporates during drying and does not become a part of the dried film.

(41) "Stain" means any color coat having a solids content by weight of no more than 8.0 per cent that is applied in single or multiple coats directly to the substrate. It includes, but is not limited to, nongrain raising stains, equalizer stains, prestains, sap stains, body stains, no-wipe stains, penetrating stains, and toners.

(42) "Strippable spray booth material" means a coating that:

(a) is applied to a spray booth wall to provide a protective film to receive over spray during finishing operations;

(b) is subsequently peeled off and disposed; and

(c) reduces or eliminates the need to use VOC solvents to clean spray booth walls due to achieving the other two provisions of this definition.

(43) "Subject to this rule" means the facility has met the applicability criteria of paragraph (A) of rule 3745-21-15 of the Administrative Code.

(44) "Substrate" means the surface onto which a coating is applied (or into which a coating is impregnated).

(45) "Temperature monitoring device" means a unit of equipment used to monitor temperature and having a minimum accuracy of plus or minus one per cent of the temperature being monitored expressed in degrees Celsius or plus or minus 0.5 degree Celsius, whichever is greater.

(46) "Thinner" means a volatile liquid that is used to dilute coatings (to reduce viscosity, color strength, and solids, or to modify drying conditions).

(47) "Topcoat" means the last film-building finishing material that is applied in a finishing system. Nonpermanent final finishes are not topcoats.

(48) "Touchup and repair" means the application of finishing materials to cover minor finishing imperfections.

(49) "VOC emission control system " means the combination of capture and control devices used to reduce VOC emissions to the atmosphere.

(50) "VOC solvent" means a VOC liquid used for dissolving or dispersing constituents in a coating, adjusting the viscosity of a coating, or cleaning

equipment. When used in a coating, the VOC solvent evaporates during drying and does not become a part of the dried film.

(51) "Washcoat" means a transparent special purpose finishing material having a solids content by weight of 12.0 per cent by weight or less. Washcoats are applied over initial stains to protect, to control color, and to stiffen the wood fibers in order to aid sanding.

(52) "Washoff operations" means those operations in which VOC solvent is used to remove coating from wood furniture or a wood furniture component.

(53) "Wood furniture" means any product made of wood, a wood product such as rattan or wicker, or an engineered wood product such as particleboard that is manufactured under any of the following standard industrial classification (SIC) codes : 2434, 2511, 2512, 2517, 2519, 2521, 2531, 2541, 2599, or 5712.

(54) "Wood furniture component" means any part that is used in the manufacture of wood furniture. Examples include, but are not limited to, drawer sides, cabinet doors, seat cushions, and laminated tops. However, foam seat cushions manufactured and fabricated at a facility that does not engage in any other wood furniture or wood furniture component manufacturing operation are excluded from this definition.

(55) "Wood furniture manufacturing operations" means the finishing, gluing, cleaning, and washoff operations associated with the production of wood furniture or wood furniture components.

(Y) As used in rule 3745-21-16 of the Administrative Code:

Except as otherwise provided in this paragraph, the definitions in rule 3745-15-01 of the Administrative Code and paragraph (B) of rule 3745-21-01 of the Administrative Code shall apply to rule 3745-21-16 of the Administrative Code (pertaining to "Control of Volatile Organic Compound Emissions from Industrial Wastewater").

(1) "Affected industrial category" means any of the following industrial categories:

(a) Organic chemicals, plastics, and synthetic fibers manufacturing industry under standard industrial classification (SIC) codes 2821, 2823, 2824, 2865, and 2869.

(b) Pesticides manufacturing industry under SIC code 2879.

(c) Pharmaceutical manufacturing industry under SIC codes 2833, 2834, and 2836.

(d) Hazardous waste treatment, storage, and disposal facilities industry under SIC codes 4952, 4953, and 4959.

(2) "Affected residual" means a residual that is removed from an affected VOC wastewater stream.

(3) "Affected VOC" means VOC with a Henry's Law Constant greater than or equal to $1.8x10^{-6}$ atm-m^3/mole (0.1 y/x) at twenty-five degrees Celsius.

(4) "Affected VOC wastewater stream" means a process wastewater stream from a process unit at an affected industrial category with either an annual average concentration of affected VOC greater than or equal to ten thousand parts per million by weight (ppmw) or an annual average concentration of affected VOC greater than or equal to one thousand ppmw and an annual average flow rate greater than or equal to 10.0 liters per minute (2.64 gallons per minute), as determined in accordance with paragraph (I) of rule 3745-21-16 of the Administrative Code (relating to "Determination of Wastewater Characteristics"). The following are excluded from this definition:

(a) Maintenance wastewaters;

(b) Stormwater from segregated sewers;

(c) Water from fire-fighting and deluge systems, including testing of such systems;

(d) Spills;

(e) Water from safety showers;

(f) Samples of a size not greater than reasonably necessary for the method of analysis that is used;

(g) Equipment leaks;

(h) Wastewater drips from procedures such as disconnecting hoses after cleaning lines; and

(i) Noncontact cooling water.

(5) "Annual average concentration" means the flow-weighted annual average concentration, as determined according to the procedures specified 40 CFR 60.782(b).

(6) "Annual average flow rate" means the annual average flow rate, as determined according to the procedures specified in paragraph (I) of rule 3745-21-16 of the Administrative Code.

(7) "Closed biological treatment process" means a tank or surface impoundment where biological treatment occurs and VOC emissions from the treatment process are routed either to a control device by means of a closed vent system or

to a fuel gas system by means of hard-piping. The tank or surface impoundment has a fixed roof, as defined in this rule, or a floating flexible membrane cover that meets the requirements specified in paragraph (I) of rule 3745-21-16 of the Administrative Code.

(8) "Closed-vent system" means a system that is not open to the atmosphere and is composed of hard-piping, ductwork, connections, and, if necessary, flow inducing devices that transport gas or vapor from an emission point to a control device.

(9) "Combustion device" means an individual unit of equipment, such as a flare, incinerator, process heater, or boiler, used for the combustion of volatile organic compound emissions.

(10) "Continuous seal" means a seal that forms a continuous closure that completely covers the space between the wall of the storage vessel and the edge of the floating roof. A continuous seal may be a vapor-mounted, liquid-mounted, or metallic shoe seal. A continuous seal may be constructed of fastened segments so as to form a continuous seal.

(11) "Continuously monitor and record" means to measure data values of a parameter at least once every fifteen minutes and to record either each measured data value or block average values for a fifteen-minute or shorter time period. A block average value is the average of all measured data values during the time period; or if data values are measured more frequently than once per minute, the average of measured data values taken at least once per minute during the time period.

(12) "Control device means" any combustion device, recovery device for vapor vents, or recapture device. Such equipment includes, but is not limited to, absorbers, carbon adsorbers, condensers, incinerators, flares, boilers, and process heaters. For a steam stripper, a primary condenser is not considered a control device.

(13) "Cover" means a device or system which is placed on or over a waste management unit containing wastewater or residuals so that the entire surface area is enclosed to minimize air VOC emissions. A cover may have openings necessary for operation, inspection, and maintenance of the waste management unit such as access hatches, sampling ports, and gauge wells provided that each opening is closed when not in use. Examples of covers include a fixed roof installed on a wastewater tank, a lid installed on a container, and an air-supported enclosure installed over a waste management unit.

(14) "Ductwork" means a conveyance system such as those commonly used for heating and ventilation systems. It is often made of sheet metal and often has sections connected by screws or crimping. Hard-piping is not ductwork.

(15) "Enhanced biological treatment process" means an aerated, thoroughly mixed treatment unit(s) that contains biomass suspended in water followed by a

clarifier that removes biomass from the treated water and recycles recovered biomass to the aeration unit. The mixed liquor volatile suspended solids (biomass) is greater than one kilogram per cubic meter throughout each aeration unit. The biomass is suspended and aerated in the water of the aeration unit(s) by either submerged air flow or mechanical agitation. A thoroughly mixed treatment unit is a unit that is designed and operated to approach or achieve uniform biomass distribution and organic compound concentration throughout the aeration unit by quickly dispersing the recycled biomass and the wastewater entering the unit.

(16) "External floating roof" means a pontoon-type or double-deck-type cover that rests on the liquid surface in a storage vessel or waste management unit with no fixed roof.

(17) "Fixed roof" means a cover that is mounted on a waste management unit or storage vessel in a stationary manner and that does not move with fluctuations in liquid level.

(18) "Floating roof" means a cover consisting of a double deck, pontoon single deck, internal floating cover or covered floating roof, which rests upon and is supported by the liquid being contained, and is equipped with a closure seal or seals to close the space between the roof edge and waste management unit.

(19) "Fbio" means site-specific fraction of VOC biodegraded, unitless.

(20) "Fe" means fraction emitted value, unitless.

(21) "Fm" means compound-specific fraction measured factor, unitless.

(22) "Fr" means fraction removed value for VOC, unitless.

(23) "Fuel gas system" means the off-site and on-site piping and control system that gathers gaseous stream(s) generated by on-site operations, may blend them with other sources of gas, and transports the gaseous stream for use as fuel gas in combustion devices or in in-process combustion equipment such as furnaces and gas turbines, either singly or in combination.

(24) "Hard-piping" means pipe or tubing that is manufactured and properly installed using good engineering judgment and standards, such as ANSI B31-3.

(25) "Incinerator" means an enclosed combustion device that is used for destroying organic compounds. Auxiliary fuel may be used to heat waste gas to combustion temperatures. Any energy recovery section present is not physically formed into one manufactured or assembled unit with the combustion section; rather, the energy recovery section is a separate section following the combustion section and the two are joined by ducts or connections carrying flue gas. The above energy recovery section limitation does not apply to an energy recovery section used solely to preheat the incoming vent stream or combustion air.

(26) "Individual drain system" means the stationary system used to convey wastewater streams or residuals to a waste management unit or to discharge or disposal. The term includes hard-piping, all process drains and junction boxes, together with their associated sewer lines and other junction boxes, manholes, sumps, and lift stations, conveying wastewater streams or residuals. A segregated storm water sewer system, which is a drain and collection system designed and operated for the sole purpose of collecting rainfall-runoff at a facility, and which is segregated from all other individual drain systems, is excluded from this definition.

(27) "Internal floating roof" means a cover that rests or floats on the liquid surface (but not necessarily in complete contact with it) inside a waste management unit that has a fixed roof.

(28) "Junction box" means a manhole or a lift station, or access point to a wastewater sewer line.

(29) "Liquid-mounted seal" means a foam or liquid-filled seal mounted in contact with the liquid between the wall of the storage vessel or waste management unit and the floating roof. The seal is mounted continuously around the circumference of the vessel or unit.

(30) "Maintenance wastewater" means wastewater generated by the draining of process fluid from components in the process unit into an individual drain system prior to or during maintenance activities. Maintenance wastewater can be generated during planned and unplanned shutdowns and during periods not associated with a shutdown. Any generation of wastewater that is routine or is generated by designed manufacturing processes is not maintenance wastewater. Examples of activities that can generate maintenance wastewaters include descaling heat exchanger tubing bundles, cleaning of distillation column traps, draining of low legs and high point bleeds, draining of pumps into an individual drain system and draining of portions of the process unit for repair.

(31) "Maximum true vapor pressure" means the equilibrium partial pressure exerted by the organics in the stored or transferred liquid at the temperature equal to the highest calendar-month average of the liquid storage or transfer temperature for liquids stored or transferred above or below the ambient temperature or at the local maximum monthly average temperature as reported by the national weather service for liquids stored or transferred at the ambient temperature, as determined:

(a) In accordance with methods described in American Petroleum Institute Bulletin 2517, "Evaporation Loss From External Floating Roof Tanks;" or

(b) As obtained from standard reference texts; or

(c) As determined by ASTM D2879-97; or

(d) Any other method approved by the director.

(32) "Mechanical shoe seal" means metal sheets that are held vertically against the wall of the storage vessel by springs, weighted levers, or other mechanisms and connected to the floating roof by braces or other means. A flexible coated fabric (envelope) spans the annular space between the metal sheet and the floating roof.

(33) "Oil-water separator" or "organic-water separator" means a waste management unit, used to separate oil or organics from water. An oil-water or organic-water separator consists of not only the separation unit but also the forebay and other separator basins, skimmers, weirs, grit chambers, sludge hoppers, and bar screens that are located directly after the individual drain system and prior to additional treatment units such as an air flotation unit, clarifier, or biological treatment unit. Examples of an oil-water or organic-water separator include, but are not limited to, an American Petroleum Institute separator, parallel-plate interceptor, and corrugated-plate interceptor with the associated ancillary equipment.

(34) "Open biological treatment process" means a biological treatment process that is not a closed biological treatment process as defined in this rule.

(35) "Plant" means the same as facility.

(36) "Point of generation" means the location where process wastewater exits a process unit.

(37) "Point of determination" means each point where process wastewater exits a process unit.

(38) "Pressure relief valve" means a valve used only to release an unplanned, non-routine discharge. A relief valve discharge can result from an operator error, a malfunction such as a power failure or equipment failure, or other unexpected cause that requires immediate venting of gas from process equipment in order to avoid safety hazards or equipment damage.

(39) "Process drain" means any opening (including a covered or controlled opening) that is installed or used to receive or convey wastewater into the wastewater system.

(40) "Process unit" means the smallest set of process equipment that can operate independently and includes all operations necessary to achieve its process objective.

(41) "Process wastewater" means wastewater which, during manufacturing or processing, comes into direct contact with or results from the production or use of any raw material, intermediate product, finished product, by-product, or waste

product. Examples are product tank drawdown or feed tank drawdown; water formed during a chemical reaction or used as a reactant; water used to wash impurities from organic products or reactants; water used to cool or quench organic vapor streams through direct contact; and condensed steam from jet ejector systems pulling vacuum on vessels containing organics.

(42) "RCRA" means the Resource Conservation and Recovery Act.

(43) "Recapture device" means an individual unit of equipment capable of and used for the purpose of recovering chemicals, but not normally for use, reuse, or sale. For example, a recapture device may recover chemicals primarily for disposal. Recapture devices include, but are not limited to, absorbers, carbon adsorbers, and condensers.

(44) "Recovery device" means an individual unit of equipment capable of and normally used for the purpose of recovering chemicals for fuel value (i.e., net positive heating value), use, reuse or for sale for fuel value, use, or reuse. Examples of equipment that may be recovery devices include absorbers, carbon adsorbers, condensers, oil-water separators or organic-water separators, or organic removal devices such as decanters, strippers, or thin-film evaporation units. For purposes of the monitoring, recordkeeping, and reporting requirements of this subpart, recapture devices are considered recovery devices.

(45) "Residual" means any liquid or solid material containing VOC that is removed from a wastewater stream by a waste management unit or treatment process that does not destroy organic compounds (nondestructive unit). Examples of residuals from nondestructive wastewater management units are: the organic layer and bottom residue removed by a decanter or organic-water separator and the overheads from a steam stripper or air stripper. Examples of materials which are not residuals are: silt; mud; leaves; bottoms from a steam stripper or air stripper; and sludges, ash, or other materials removed from wastewater being treated by destructive devices such as biological treatment units and incinerators.

(46) "Sewer line" means a lateral, trunk line, branch line, or other conduit including, but not limited to, grates, trenches, etc., used to convey wastewater streams or residuals to a downstream waste management unit.

(47) "Single-seal system" means a floating roof having one continuous seal that completely covers the space between the wall of the storage vessel and the edge of the floating roof. This seal may be a vapor-mounted, liquid-mounted, or metallic shoe seal.

(48) "Steam jet ejector" means a steam nozzle which discharges a high-velocity jet across a suction chamber that is connected to the equipment to be evacuated.

(49) "Steam stripper" means a column (including associated stripper feed tanks, condensers, or heat exchangers) used to remove compounds from wastewater.

(50) "Surface impoundment" means a waste management unit which is a natural topographic depression, manmade excavation, or diked area formed primarily of earthen materials (although it may be lined with manmade materials), which is designed to hold an accumulation of liquid wastes or waste containing free liquids. A surface impoundment is used for the purpose of treating, storing, or disposing of wastewater or residuals, and is not an injection well. Examples of surface impoundments are equalization, settling, and aeration pits, ponds, and lagoons.

(51) "Tank drawdown" means any material or mixture of materials discharged from a product tank, feed tank, or intermediate tank for the purpose of removing water or other contaminants from the tank.

(52) "Temperature monitoring device" means a unit of equipment used to monitor temperature and having a minimum accuracy of (a) plus or minus one per cent of the temperature being monitored expressed in degrees Celsius or (b) plus or minus 0.5 degree Celsius, whichever number is greater (i.e., has the highest absolute value).

(53) "Treatment process" means a specific technique that removes or destroys the organics in a wastewater or residual stream such as a steam stripping unit (steam stripper), thin-film evaporation unit, waste incinerator, biological treatment unit, or any other process applied to wastewater streams or residuals to comply with paragraph (D)(8) or (E) of rule 3745-21-16 of the Administrative Code. Most treatment processes are conducted in tanks. Treatment processes are a subset of waste management units.

(54) "Vapor-mounted seal" means a continuous seal that completely covers the annular space between the wall of the storage vessel or waste management unit and the edge of the floating roof and is mounted such that there is a vapor space between the stored liquid and the bottom of the seal.

(55) "Waste management unit" means the equipment, structure(s), or device(s) used to convey, store, treat, or dispose of wastewater streams or residuals. Examples of waste management units include: wastewater tanks, surface impoundments, individual drain systems, and biological wastewater treatment units. Examples of equipment that may be waste management units include containers, air flotation units, oil-water separators or organic-water separators, or organic removal devices such as decanters, strippers, or thin-film evaporation units. If such equipment is used for recovery then it is part of a process unit and is not a waste management unit.

(56) "Wastewater stream" means a stream that contains process wastewater.

(57) "Wastewater tank" means a stationary waste management unit that is designed to contain an accumulation of wastewater or residuals and is constructed primarily of non-earthen materials (e.g., wood, concrete, steel, plastic) which

provide structural support. Wastewater tanks used for flow equalization are included in this definition.

(58) "Water seal controls" means a seal pot, p-leg trap, or other type of trap filled with water (e.g., flooded sewers that maintain water levels adequate to prevent air flow through the system) that creates a water barrier between the water level of the seal and the atmosphere. The water level of the seal must be maintained in the vertical leg of a drain in order to be considered a water seal.

(59) "Wet weather retention basin" means an impoundment or tank that is used to store rainfall runoff that would exceed the capacity of the wastewater treatment system until it can be returned to the wastewater treatment system or, if the water meets the applicable discharge limits, discharged without treatment. These units may also be used to store wastewater during periods when the wastewater treatment system is shut down for maintenance or emergencies.

(Z) As used in rule 3745-21-17 of the Administrative Code:

Except as otherwise provided in this paragraph, the definitions in rule 3745-15-01 of the Administrative Code and paragraph (B) of rule 3745-21-01 of the Administrative Code shall apply to rule 3745-21-17 of the Administrative Code (pertaining to portable fuel containers).

(1) "Fuel" means all gasoline, gasoline-alcohol mixtures or blends, diesel, kerosene or petroleum derivatives, having a true vapor pressure within the range of 1.5 to eleven pounds per square in absolute (psia) (10.3 to 75.6) for use in internal combustion engines or aircraft.

(2) "Manufacturer" means any person who imports, manufactures, assembles, packages, repackages, or re-labels a portable fuel container or spout or both portable fuel container and spout.

(3) "Nominal capacity" means the volume indicated by the manufacturer that represents the maximum recommended filling level.

(4) "Outboard engine" means a spark-ignition marine engine that, when properly mounted on a marine water-craft in the position to operate, houses the engine and drive unit external to the hull of the marine water-craft.

(5) "Person" means any individual, public or private corporation, political subdivision, government agency, department or bureau of the State, municipality, industry, co-partnership, association, firm, estate or any legal entity whatsoever.

(6) "Portable fuel container" means any container or vessel with a nominal capacity of ten gallons or less intended for reuse that is designed, or used, sold, advertised or offered for sale primarily for receiving, transporting, storing, and dispensing fuel or kerosene. Portable fuel containers do not include containers

permanently embossed, or affixed with a permanent durable label with wording indicating such containers are solely intended for use with non-fuel or non-kerosene products.

(7) "Spout" means any device that can be firmly attached to a portable fuel container for conducting pouring or fueling through which the contents of a portable fuel container can be dispensed.

(8) "Target fuel tank" means any receptacle that receives fuel from a portable fuel container.

(AA) As used in rule 3745-21-19 of the Administrative Code:

(1) "Ablative coating" means a coating that chars when exposed to open flame or extreme temperatures, as would occur during the failure of an engine casing or during aerodynamic heating. The ablative char surface serves as an insulative barrier, protecting adjacent components from the heat or open flame.

(2) "Adhesion promoter" means a very thin coating applied to a substrate to promote wetting and form a chemical bond with the subsequently applied material.

(3) "Adhesive bonding primer" means a primer applied in a thin film to aerospace components for the purpose of corrosion inhibition and increased adhesive bond strength by attachment. There are two categories of adhesive bonding primers: primers with a design cure at two hundred fifty degrees Fahrenheit or below and primers with a design cure above two hundred fifty degrees Fahrenheit.

(4) "Adhesive primer" means a coating that:

(a) Inhibits corrosion and serves as a primer applied to bare metal surfaces or prior to adhesive application; or

(b) Is applied to surfaces that can be expected to contain fuel, however, fuel tank coatings are excluded from this category.

(5) "Aerosol coating" means a coating expelled from a handheld, pressurized, non-refillable container in a finely divided spray when a valve on the container is depressed.

(6) "Aerospace manufacturing or rework facility" means any facility that produces, reworks, or repairs in any amount any commercial, civil, or military aerospace vehicle or component.

(7) "Aerospace vehicle or component" means any fabricated part, processed part, assembly of parts, or completed unit, with the exception of electronic components, of any aircraft including but not limited to airplanes, helicopters, missiles, rockets, and space vehicles.

(8) "Aircraft fluid systems" means those systems that handle hydraulic fluids, fuel, cooling fluids, or oils.

(9) "Aircraft transparency" means the aircraft windshield, canopy, passenger windows, lenses and other components which are constructed of transparent materials.

(10) "Antichafe coating" means a coating applied to areas of moving aerospace components that may rub during normal operations or installation.

(11) "Antique aerospace vehicle or component" means an aircraft or component thereof that was built at least thirty years ago. An antique aerospace vehicle would not routinely be in commercial or military service in the capacity for which it was designed.

(12) "Aqueous cleaning solvent" means a solvent in which water is at least eighty percent of the solvent as applied. Detergents, surfactants, and bioenzyme mixtures and nutrients may be combined with the water along with a variety of additives, such as organic solvents (e.g., high boiling point alcohols), builders, saponifiers, inhibitors, emulsifiers, pH buffers, and antifoaming agents. Aqueous solutions must have a flash point greater than ninety-three degrees Celsius (two hundred degrees Fahrenheit) (as reported by the manufacturer), and the solution must miscible with water.

(13) "Bearing coating" means a coating applied to an antifriction bearing, a bearing housing, or the area adjacent to such a bearing in order to facilitate bearing function or to protect base material from excessive wear. A material shall not be classified as a bearing coating if it can also be classified as a dry lubricative material or a solid film lubricant.

(14) "Bonding maskant" means a temporary coating used to protect selected areas of aerospace parts from strong acid or alkaline solutions during processing for bonding.

(15) "Caulking and smoothing compounds" means semi-solid materials which are applied by hand application methods and are used to aerodynamically smooth exterior vehicle surfaces or fill cavities such as bolt hole accesses. A material shall not be classified as a caulking and smoothing compound if it can also be classified as a sealant.

(16) "Chemical agent-resistant coating" or "CARC" means an exterior topcoat designed to withstand exposure to chemical warfare agents or the decontaminants used on these agents.

(17) "Chemical milling maskant" means a coating that is applied directly to aluminum components to protect surface areas when chemical milling the component with a Type I or Type II etchant. Type I chemical milling maskants are used with a Type I etchant and Type II chemical milling maskants are used

with a Type II etchant. This definition does not include bonding maskants, critical use, line sealer maskants, and seal coat maskants. Additionally, maskants that must be used with a combination of Type I or II etchants and any of the above types of maskants (i.e., bonding, critical use and line sealer, and seal coat) are also exempt from this subpart. (See also Type I and Type II etchant definitions.)

(18) "Cleaning operation" means collectively spray gun, hand wipe, and flush cleaning operations.

(19) "Cleaning solvent" means a liquid material used for hand wipe, spray gun, or flush cleaning. This definition does not include solutions that contain VOC at concentrations less than 0.1 per cent by weight for carcinogens and less than 1.0 per cent by weight for non-carcinogens, as determined from manufacturer's representations.

(20) "Clear coating" means a transparent coating usually applied over a colored opaque coating, metallic substrate, or placard to give improved gloss and protection to the color coat. A clearcoat refers to any transparent coating without regard to substrate.

(21) "Coating" means a material that is applied to the surface of an aerospace vehicle or component to form a decorative or functional solid film, or the solid film itself.

(22) "Coating line" means an operation consisting of a series of one or more coating applicators and any associated flash-off areas, drying areas and ovens wherein a coating is applied, dried, and/or cured. It is not necessary for an operation to have an oven, or flash-off area, or drying area in order to be included within this definition.

(23) "Coating operation" means the use of a spray booth, tank, or other enclosure or any area, such as a hangar, for the application of a single type of coating (e.g., primer). The use of the same spray booth, tank, or other enclosure or area for the application of another type of coating (e.g., topcoat) constitutes a separate coating operation for which compliance determinations are performed separately.

(24) "Commercial exterior aerodynamic structure primer" means a primer used on aerodynamic components and structures that protrude from the fuselage, such as wings and attached components, control surfaces, horizontal stabilizers, vertical fins, wing-to-body fairs, antennae, and landing gear and doors, for the purpose of extended corrosion protection and enhanced adhesion.

(25) "Commercial interior adhesive" means materials used in the bonding of passenger cabin interior components. These components must meet the FAA fire worthiness requirements.

(26) "Compatible epoxy primer" means a primer that is compatible with the filled elastomeric coating and is epoxy based. This compatible substrate primer is an epoxy-polyamide primer used to promote adhesion of elastomeric coatings such as impact-resistant coatings.

(27) "Compatible substrate primer" means a primer that is either a compatible epoxy primer or an adhesive primer.

(28) "Confined space" means a space that:

(a) Is large enough and so configured that an employee can bodily enter and perform assigned work;

(b) Has limited or restricted means for entry or exit (for example, fuel tanks, fuel vessels, and other spaces that have limited means of entry); and

(c) Is not suitable for continuous employee occupancy.

(29) "Corrosion prevention compound" means a coating that provides corrosion protection by displacing water and penetrating mating surfaces, forming a protective barrier between the metal surface and moisture. Coatings containing oils or waxes are excluded from this category.

(30) "Critical use and line sealer maskant" means a temporary coating, not covered under other maskant categories, used to protect selected areas of aerospace parts from strong acid or alkaline solutions such as those used in anodizing, plating, chemical milling and processing of magnesium, titanium, or high strength steel, high precision aluminum chemical milling of deep cuts, and aluminum chemical milling of complex shapes. Materials used for repairs or to bridge gaps left by scribing operations (i.e., line sealer) are also included in this category.

(31) "Cryogenic flexible primer" means a primer designed to provide corrosion resistance, flexibility, and adhesion of subsequent coating systems when exposed to loads up to and surpassing the yield point of the substrate at cryogenic temperatures (minus two hundred seventy-five degrees Fahrenheit and below).

(32) "Cryoprotective coating" means a coating that insulates cryogenic or subcooled surfaces to limit propellant boil-off, maintain structural integrity of metallic structures during ascent or re-entry, and prevent ice formation.

(33) "Cyanoacrylate adhesive" means a fast-setting, single component adhesive that cures at room temperature. It is also known by the tradename "super glue."

(34) "DOD" means the United States department of defense, including military departments and defense agencies, acting through either the secretary of defense or the designee of the secretary.

(35) "Dry lubricative material" means a coating consisting of lauric acid, cetyl alcohol, waxes, or other non-cross linked or resin-bound materials which act as a dry lubricant.

(36) "Electric or radiation-effect coating" means a coating or coating system engineered to interact, through absorption or reflection, with specific regions of the electromagnetic energy spectrum, such as the ultraviolet, visible, infrared, or microwave regions. Uses include, but are not limited to, lightning strike protection, electromagnetic pulse protection, and radar avoidance. Coatings that have been designated "classified" by the department of defense are exempt.

(37) "Electrostatic discharge and electromagnetic interference coating" or "EMI coating" means a coating applied to space vehicles, missiles, aircraft radomes, and helicopter blades to disperse static energy or reduce electromagnetic interference.

(38) "Electrostatic spray" means a method of applying a spray coating in which an electrical charge is applied to the coating and the substrate is grounded. The coating is attracted to the substrate by the electrostatic potential between them.

(39) "Elevated temperature Skydrol-resistant commercial primer" means a primer applied primarily to commercial aircraft (or commercial aircraft adapted for military use) that must withstand immersion in phosphate-ester hydraulic fluid (Skydrol 500b or equivalent) at the elevated temperature of one hundred fifty degrees Fahrenheit for one thousand hours.

(40) "Epoxy polyamide topcoat" means a coating used where harder films are required or in some areas where engraving is accomplished in camouflage colors.

(41) "Exterior primer" means the first layer and any subsequent layers of identically formulated coating applied to the exterior surface of an aerospace vehicle or component where the component is used on the exterior of the aerospace vehicle. Exterior primers are typically used for corrosion prevention, protection from the environment, functional fluid resistance, and adhesion of subsequent exterior topcoats. Coatings that are defined as specialty coatings are not included under this definition.

(42) "FAA" means the federal aviation administration, department of transportation, United States.

(43) "Fire-resistant (interior) coating" means:

(a) For civilian aircraft, a coating used on passenger cabin interior parts that are subject to the FAA fireworthiness requirements;

(b) For military aircraft, a coating used on parts that are subject to the flammability requirements of MIL-STD-1630A and MIL-A-87721; and

(c) For space applications, a coating used on parts that are subject to the flammability requirements of SE-R-0006 and SSP 30233.

(44) "Flexible primer" means a primer that meets flexibility requirements such as those needed for adhesive bond primed fastener heads or on surfaces expected to contain fuel. The flexible coating is required because it provides a compatible, flexible substrate over bonded sheet rubber and rubber-type coatings as well as a flexible bridge between the fasteners, skin, and skin-to-skin joints on outer aircraft skins. This flexible bridge allows more topcoat flexibility around fasteners and decreases the chance of the topcoat cracking around the fasteners. The result is better corrosion resistance.

(45) "Flight test coating" means a coating applied to aircraft other than missiles or single-use aircraft prior to flight testing to protect the aircraft from corrosion and to provide required marking during flight test evaluation.

(46) "Fuel tank adhesive" means an adhesive used to bond components exposed to fuel and must be compatible with fuel tank coatings.

(47) "Fuel tank coating" means a coating applied to fuel tank components for the purpose of corrosion and/or bacterial growth inhibition and to assure sealant adhesion in extreme environmental conditions.

(48) "General aviation" or "GA" means that segment of civil aviation that encompasses all facets of aviation except air carriers, commuters, and military. General aviation includes charter and corporate-executive transportation, instruction, rental, aerial application, aerial observation, business, pleasure, and other special uses.

(49) "General aviation rework facility" means any aerospace facility with the majority of its revenues resulting from the reconstruction, repair, maintenance, repainting, conversion, or alteration of general aviation aerospace vehicles or components.

(50) "Hand wipe cleaning operation" means removing contaminants such as dirt, grease, oil, and coatings from an aerospace vehicle or component by physically rubbing it with a material such as a rag, paper, or cotton swab that has been moistened with a cleaning solvent.

(51) "High temperature coating" means a coating designed to withstand temperatures of more than three hundred fifty degrees Fahrenheit.

(52) "High volume low pressure spray equipment" or "HVLP spray equipment" means spray equipment that is used to apply coating by means of a spray gun that operates at 10.0 pounds per square inch gauge of atomizing air pressure or less at the air cap.

(53) "Insulation covering" means material that is applied to foam insulation to protect the insulation from mechanical or environmental damage.

(54) "Intermediate release coating" means a thin coating applied beneath topcoats to assist in removing the topcoat in depainting operations and generally to allow the use of less hazardous depainting methods.

(55) "Lacquer" means a clear or pigmented coating formulated with a nitrocellulose or synthetic resin to dry by evaporation without a chemical reaction. Lacquers are resoluble in their original solvent.

(56) "Large commercial aircraft" means an aircraft of more than one hundred ten thousand pounds, maximum certified take-off weight manufactured for non-military use.

(57) "Leak" means any visible leakage, including misting and clouding.

(58) "Limited access space" means internal surfaces or passages of an aerospace vehicle or component that cannot be reached without the aid of an airbrush or a spray gun extension for the application of coatings.

(59) "Metalized epoxy coating" means a coating that contains relatively large quantities of metallic pigmentation for appearance and/or added protection.

(60) "Mold release" means a coating applied to a mold surface to prevent the molded piece from sticking to the mold as it is removed.

(61) "Nonstructural adhesive" means an adhesive that bonds nonload bearing aerospace components in noncritical applications and is not covered in any other specialty adhesive categories.

(62) "Operating parameter value" means a minimum or maximum value established for a control equipment or process parameter that, if achieved by itself or in combination with one or more other operating parameter values, determines that an owner or operator has complied with an applicable emission limitation.

(63) "Optical anti-reflection coating" means a coating with a low reflectance in the infrared and visible wavelength ranges that is used for antireflection on or near optical and laser hardware.

(64) "Part marking coating" means coatings or inks used to make identifying markings on materials, components, and/or assemblies. These markings may be either permanent or temporary.

(65) "Pretreatment coating" means an organic coating that contains at least 0.5 percent acids by weight and is applied directly to metal surfaces to provide surface etching, corrosion resistance, adhesion, and ease of stripping.

(66) "Primer" means the first layer and any subsequent layers of identically formulated coating applied to the surface of an aerospace vehicle or component. Primers are typically used for corrosion prevention, protection from the environment, functional fluid resistance, and adhesion of subsequent coatings. Primers that are defined as specialty coatings are not included under this definition.

(67) "Radome" means the nonmetallic protective housing for electromagnetic transmitters and receivers (e.g., radar, electronic countermeasures, etc.).

(68) "Rain erosion-resistant coating" means a coating or coating system used to protect the leading edges of parts such as flaps, stabilizers, radomes, engine inlet nacelles, etc. against erosion caused by rain impact during flight.

(69) "Research and development operation" means an operation whose purpose is for research and development of new processes and products, that is conducted under the close supervision of technically trained personnel and is not involved in the manufacture of final or intermediate products for commercial purposes, except in a de minimis manner.

(70) "Rocket motor bonding adhesive" means an adhesive used in rocket motor bonding applications.

(71) "Rocket motor nozzle coating" means a catalyzed epoxy coating system used in elevated temperature applications on rocket motor nozzles.

(72) "Rubber-based adhesive" means a quick setting contact cement that provide a strong, yet flexible bond between two mating surfaces that may be of dissimilar materials.

(73) "Scale inhibitor" means a coating that is applied to the surface of a part prior to thermal processing to inhibit the formation of scale.

(74) "Screen print ink" means a inks used in screen printing processes during fabrication of decorative laminates and decals.

(75) "Seal coat maskant" means an overcoat applied over a maskant to improve abrasion and chemical resistance during production operations.

(76) "Sealant" means a material used to prevent the intrusion of water, fuel, air, or other liquids or solids from certain areas of aerospace vehicles or components. There are two categories of sealants: extrudable/rollable/brushable sealants and sprayable sealants.

(77) "Self-priming topcoat" means a topcoat that is applied directly to an uncoated aerospace vehicle or component for purposes of corrosion prevention, environmental protection, and functional fluid resistance. More than one layer of identical coating formulation may be applied to the vehicle or component.

(78) "Semiaqueous cleaning solvent" means a solution in which water is a primary ingredient (greater than sixty per cent of the solvent solution as applied must be water.)

(79) "Silicone insulation material" means an insulating material applied to exterior metal surfaces for protection from high temperatures caused by atmospheric friction or engine exhaust. These materials differ from ablative coatings in that they are not "sacrificial."

(80) "Solids" means the nonvolatile portion of the coating that after drying makes up the dry film.

(81) "Solid film lubricant" means a very thin coating consisting of a binder system containing as its chief pigment material one or more of the following: molybdenum, graphite, polytetrafluoroethylene, or other solids that act as a dry lubricant between faying surfaces.

(82) "Space vehicle" means a man-made device, either manned or unmanned, designed for operation beyond earth's atmosphere. This definition includes integral equipment such as models, mock-ups, prototypes, molds, jigs, tooling, hardware jackets, and test coupons. Also included is auxiliary equipment associated with test, transport, and storage, which through contamination can compromise the space vehicle performance.

(83) "Specialty coating" means a coating that, even though it meets the definition of a primer, topcoat, or self-priming topcoat, has additional performance criteria beyond those of primers, topcoats, and self-priming topcoats for specific applications. These performance criteria may include, but are not limited to, temperature or fire resistance, substrate compatibility, antireflection, temporary protection or marking, sealing, adhesively joining substrates, or enhanced corrosion protection. A listing of specialty coatings is found in paragraph (D)(1)(b) of rule 3745-21-19 of the Administrative Code.

(84) "Specialized function coating" means a coating that fulfills extremely specific engineering requirements that are limited in application and are characterized by low volume usage. This category excludes coatings covered in other specialty coating categories.

(85) "Spray gun" means a device that atomizes a coating or other material and projects the particulates or other material onto a substrate.

(86) "Structural autoclavable adhesive" means an adhesive used to bond load carrying aerospace components that is cured by heat and pressure in an autoclave.

(87) "Structural non-autoclavable adhesive" means an adhesive cured under ambient conditions that is used to bond load carrying aerospace components or other critical functions, such as nonstructural bonding in the proximity of engines.

(88) "Surface preparation" means the removal of contaminants from the surface of an aerospace vehicle or component or the activation or reactivation of the surface in preparation for the application of a coating.

(89) "Temporary protective coating" means a coating applied to provide scratch or corrosion protection during manufacturing, storage, or transportation. Two types include peelable protective coatings and alkaline removable coatings. These materials are not intended to protect against strong acid or alkaline solutions. Coatings that provide this type of protection from chemical processing are not included in this category.

(90) "Thermal control coating" means a coatings formulated with specific thermal conductive or radiative properties to permit temperature control of the substrate.

(91) "Topcoat" means a coating that is applied over a primer on an aerospace vehicle or component for appearance, identification, camouflage, or protection. Topcoats that are defined as specialty coatings are not included under this definition.

(92) "Touchup and repair coating" means a coating used to cover minor coating imperfections appearing after the main coating operation.

(93) "Type II etchant" means a chemical milling etchant that is a strong sodium hydroxide solution containing amines.

(94) "Type I etchant" means a chemical milling etchant that contains varying amounts of dissolved sulfur and does not contain amines.

(95) "VOC composite vapor pressure" means the sum of the partial pressures of the compounds defined as VOC in this rule, as determined according to the procedures specified in paragraph (S) of rule 3745-21-10 of the Administrative Code.

(96) "Waterborne (water-reducible) coating" means a coating which contains more than five per cent water by weight as applied in its volatile fraction.

(97) "Wet fastener installation coating" means a primer or sealant applied by dipping, brushing, or daubing to fasteners that are installed before the coating is cured.

(98) "Wing coating" means a corrosion-resistant topcoat that is resilient enough to withstand the flexing of the wings.

(BB) As used in rule 3745-21-20 of the Administrative Code.

(1) "Add-on control system" means an air pollution control device such as a carbon adsorber or incinerator that reduces pollution in an air stream by destruction or removal prior to discharge to the atmosphere.

(2) "Air flask coating" means any special composition coating applied to interior surfaces of high pressure breathing air flasks to provide corrosion resistance and that is certified safe for use with breathing air supplies.

(3) "Antenna coating" means any coating applied to equipment through which electromagnetic signals must pass for reception or transmission.

(4) "Antifoulant coating" means any coating that is applied to the underwater portion of a vessel to prevent or reduce the attachment of biological organisms and that is registered with the USEPA as a pesticide under the Federal Insecticide, Fungicide, and Rodenticide Act.

(5) "As applied" means the condition of a coating at the time of application to the substrate, including any thinning solvent.

(6) "As supplied" means the condition of a coating before any thinning, as sold and delivered by the coating manufacturer to the user.

(7) "Batch" means the product of an individual production run of a coating manufacturer's process. A batch may vary in composition from other batches of the same product.

(8) "Bitumens" mean black or brown materials that are soluble in carbon disulfide and consist mainly of hydrocarbons.

(9) "Bituminous resin coating" means any coating that incorporates bitumens as a principal component and is formulated primarily to be applied to a substrate or surface to resist ultraviolet radiation and/or water.

(10) "Chemical Agent Resistant Coating" or "CARC" means a military exterior coating.

(11) "Coating" means any material that can be applied as a thin layer to a substrate and which cures to form a continuous solid film.

(12) "Cold-weather time period" means any time during which the ambient temperature is below 4.5 degrees Celsius (forty degrees Fahrenheit) and coating is to be applied.

(13) "Container of coating" means the container from which the coating is applied, including but not limited to a bucket or pot.

(14) "Cure volatiles" means reaction products which are emitted during the chemical reaction which takes place in some coating films at the cure temperature. These emissions are other than those from the solvents in the coating and may, in some cases, comprise a significant portion of total VOC emissions.

(15) "Epoxy coating" means any thermoset coating formed by reaction of an epoxy resin (i.e., a resin containing a reactive epoxide with a curing agent).

(16) "General use coating" means any coating that is not a specialty coating.

(17) "Heat resistant coating" means any coating that during normal use must withstand a temperature of at least two hundred four degrees Celsius (four hundred degrees Fahrenheit).

(18) "High-gloss coating" means any coating that achieves at least eighty-five per cent reflectance on a sixty-degree meter when tested by ASTM D523-89(1999).

(19) "High-temperature coating" means any coating that during normal use must withstand a temperature of at least four hundred twenty-six degrees Celsius (eight hundred degrees Fahrenheit).

(20) "Inorganic zinc (high-build) coating" means a coating that contains eight pounds per gallon (nine hundred sixty grams per liter) or more elemental zinc incorporated into an inorganic silicate binder that is applied to steel to provide galvanic corrosion resistance.

(21) "Interior coating" means any coating used on interior surfaces aboard United States military vessels pursuant to a coating specification that requires the coating to meet specified fire retardant and low toxicity requirements, in addition to the other applicable military physical and performance requirements.

(22) "Marine coating" means any coating that is applied to ships.

(23) "Maximum allowable thinning ratio" means the maximum volume of thinner that can be added per volume of coating without violating the VOC content limits of paragraph (D)(1) of rule 3745-21-20 of the Administrative Code.

(24) "Military exterior coating" means any exterior topcoat applied to military or USCG vessels that are subject to specific chemical, biological, and radiological washdown requirements.

(25) "Mist coating" means any low viscosity, thin film, epoxy coating applied to an inorganic zinc primer that penetrates the porous zinc primer and allows the occluded air to escape through the paint film prior to curing.

(26) "Navigational aids coating" means any coating applied to USCG buoys or other USCG waterway markers when they are recoated aboard ship at their usage site and immediately returned to the water.

(27) "Nonskid coating" means any coating applied to the horizontal surfaces of a marine vessel for the specific purpose of providing slip resistance for personnel, vehicles, or aircraft.

(28) "Nonvolatiles" means substances that do not evaporate readily. This term refers to the film-forming material of a coating.

(29) "Normally closed" means a container or piping system is closed unless an operator is actively engaged in adding or removing material.

(30) "Nuclear coating" means any protective coating used to seal porous surfaces such as steel (or concrete) that otherwise would be subject to intrusion by radioactive materials. These coatings must be resistant to long-term (service life) cumulative radiation exposure (ASTM D4082-89), relatively easy to decontaminate (ASTM D4256-89(1994)e1), and resistant to various chemicals to which the coatings are likely to be exposed (ASTM D3912-80). [For nuclear coatings, see the general protective requirements outlined by the United States nuclear regulatory commission in a report entitled "Regulatory Guide 1.54 - Service Level I, II and III Protective Coatings Applied to Nuclear Plants."]

(31) "Operating parameter value" means a minimum or maximum value established for a control device or process parameter that, if achieved by itself or in combination with one or more other operating parameter values, determines that an owner or operator has complied with an applicable emission limitation.

(32) "Organic zinc coating" means any coating derived from zinc dust incorporated into an organic binder that contains more than eight pounds of elemental zinc per gallon (nine hundred sixty grams per liter) of coating, as applied, and that is used for the expressed purpose of corrosion protection.

(33) "Pleasure craft" means any marine or fresh-water vessel used by individuals for noncommercial, nonmilitary, and recreational purposes that is less than twenty meters in length. A vessel rented exclusively to or chartered by individuals for such purposes shall be considered a pleasure craft.

(34) "Pretreatment wash primer" means any coating that contains a minimum of 0.5 per cent acid, by mass, and is applied only to bare metal to etch the surface and enhance adhesion of subsequent coatings.

(35) "Repair and maintenance of thermoplastic coating" means any vinyl, chlorinated rubber, or bituminous resin coating that is applied over the same type of existing coating to perform the partial recoating of any in-use commercial vessel. (This definition does not include coal tar epoxy coatings, which are considered "general use" coatings.)

(36) "Rubber camouflage coating" means any specially formulated epoxy coating used as a camouflage topcoat for exterior submarine hulls and sonar domes.

(37) "Sealant coating for thermal spray aluminum" means any epoxy coating applied to thermal spray aluminum surfaces at a maximum thickness of one dry mil.

(38) "Ship" means any marine or fresh-water vessel used for military or commercial operations, including self-propelled vessels, those propelled by other craft (barges), and navigational aids (buoys). This definition includes, but is not limited to, all military and USCG vessels, commercial cargo and passenger (cruise) ships, ferries, barges, tankers, container ships, patrol and pilot boats, and dredges. For purposes of rule 3745-21-20 of the Administrative Code, pleasure crafts and offshore oil and gas drilling platforms are not considered ships.

(39) "Shipbuilding and/or ship repair operations" means any building, repair, repainting, converting, or alteration of ships.

(40) "Solids" means nonvolatiles.

(41) "Special marking coating" means any coating that is used for safety or identification applications, such as markings on flight decks and ships' numbers.

(42) "Tack coating" means any thin film epoxy coating applied at a maximum thickness of two dry mils to prepare an epoxy coating that has dried beyond the time limit specified by the manufacturer for the application of the next coat.

(43) "Thinner" means a liquid that is used to reduce the viscosity of a coating and that evaporates before or during the cure of a film.

(44) "Thinning ratio" means the volumetric ratio of thinner to coating, as supplied.

(45) "Thinning solvent" means thinner.

(46) "Undersea weapons systems coating" means any coating applied to any component of a weapons system intended to be launched or fired from under the sea.

(47) "USCG" means the United States coast guard.

(48) "Weld-through preconstruction primer" means a coating that provides corrosion protection for steel during inventory, is typically applied at less than one mil dry film thickness, does not require removal prior to welding, is temperature resistant (burn back from a weld is less than 1.25 centimeters (0.5 inch)), and does not normally require removal before applying film-building coatings, including inorganic zinc high-build coatings. When constructing new vessels, there may be a need to remove areas of weld-through preconstruction primer due to surface damage or contamination prior to application of film-building coatings.

(CC) (Reserved)

(DD) As used in rule 3745-21-22 of the Administrative Code (pertaining to the control of VOC emissions from lithographic and letterpress printing operations).

(1) "Alcohol" means any of the following compounds, when used as a fountain solution additive for offset lithographic printing: ethanol, n-propanol, and isopropanol.

(2) "Alcohol substitutes" means nonalcohol additives that contain VOCs and are used in the fountain solution. Some additives are used to reduce the surface tension of water; others are added to prevent piling (ink build-up).

(3) "Automatic blanket wash system" means equipment used to clean lithographic blankets which can include, but is not limited to those utilizing a cloth and expandable bladder, brush, spray, or impregnated cloth system.

(4) "Cleaning material" means with respect to a surface coating operation or graphic arts operation, a liquid solvent or solution used to clean the operating surfaces of a printing press and its parts. For purposes of this standard, cleaning solutions include, but are not limited to blanket wash, roller wash, metering roller cleaner, plate cleaner, impression cylinder washes, rubber rejuvenators, and other cleaners used for cleaning a press, press parts, or to remove dried ink or coating from areas around the press.

(5) "Capture system" means all equipemnt, including but not limited to hoods, ducts, fans, ovens and dryers, used to contain, collect, and route VOC vapors released from a coating line or printing line.

(6) "Control system" means any device or combination of devices designed to recover or incinerate VOC vapors received from a capture system.

(7) "Composite partial pressure" means the sum of the partial pressures of the VOC compounds in a solvent.

(8) "Dampening system" means equipment used to deliver the fountain solution to the lithographic plate.

(9) "Fountain solution" means a mixture of water and other volatile and non-volatile chemicals and additives used in lithographic printing operations that maintains the quality of the printing plate including preventing debris build up (e.g., spray power, paper fiber, coating particles, dried ink particles, and other materials), and increases viscosity and reduces the surface tension of the water so that it spreads easily across the printing plate surface. The fountain solution wets the nonimage area so that the ink is maintained within the image areas. Non-volatile additives include mineral salts and hydrophilic gums. Alcohol and alcohol substitutes are the most common VOC additives used to reduce the surface tension of the fountain solution.

(10) "Fountain solution batch" means a supply of fountain solution that is prepared and used without alteration until completely used or removed from the printing process. For the purposes of this rule, this term may apply to solutions prepared in either discrete batches or solutions that are continuously blended with automatic mixing units.

(11) "Fountain solution reservoir" means the collection tank that accepts fountain solution recirculated from printing unit(s). In some cases, the tanks are equipped with cooling coils for refrigeration of the fountain solution.

(12) "Heatset" means a lithographic printing process where the printing inks are set by the evaporation of the ink oils in a heatset dryer.

(13) "Heatset dryer" means a hot air dryer used in heatset lithography to heat the printed substrate and to promote the evaporation of ink oils.

(14) "Inking system" means a series of rollers used to meter ink onto the lithographic plate. The system can include agitators, pumps, totes, and other types of ink containers.

(15) "Lithographic printing" or "lithographic printing operation" means a planographic printing process where the image and nonimage areas are chemically differentiated; the image area is oil receptive and the nonimage area is water receptive. This method differs from other printing methods, where the image is typically printed from a raised or recessed surface. A lithographic printing operation includes, but is not limited to, a heatset web lithographic printing operation, a coldset web offset lithographic printing operation, and a sheet-fed offset lithographic printing operation.

(16) "Non-heatset lithographic printing" means a lithographic printing process where the printing inks are set by absorption and/or oxidation of the ink oil, not by evaporation of the ink oils in a dryer. Use of an infrared heater or printing conducted using ultraviolet-cured or electron beam-cured inks is considered non-heatset.

(17) "Offset lithography" means a printing process that transfers the ink film from the lithographic plate to an intermediary surface (blanket), which, in turn, transfers the ink film to the substrate.

(18) "Press" means a printing production assembly composed of one or more units used to produce a printed substrate including any associated coating, spray powder application, heatset web dryer, ultraviolet or electron beam curing units, or infrared heating units.

(19) "Sheet-fed lithographic printing" means a non-heatset lithographic printing process where individual sheets of substrate are fed into the press sequentially.

(20) "Unit" means the smallest complete printing component, composed of inking and dampening systems, of a printing press.

(21) "Web" means a lithographic printing process where a continuous roll of substrate is fed into a press.

(22) "Letterpress printing" means a printing method where the image area is raised relative to the non-image area and the ink is transferred to the paper directly from the image surface.

(23) "Raoults Law" means the vapor pressure of the solvent in an ideal solution is equal to the mole fraction of the solvent times the vapor pressure of the pure solvent.

(EE) As used in rule 3745-21-23 of the Administrative Code (pertaining to the control of VOC emissions from industrial cleaning solvents).

(1) "Composite partial pressure" means the sum of the partial pressures of the VOC compounds in a solvent.

(2) "Digital printing" means a print-on-demand method of printing in which an electronic output device transfers variable data, in the form of an image, from a computer to a variety of substrates. Digital printing methods include, but are not limited to, inkjet printing, electrophotographic printing, dye sublimation printing, thermal wax printing and solid ink printing.

(3) "Screen printing" means a process in which the printing ink passes through a web or a fabric to which a refined form of stencil has been applied. The stencil openings determine the form and dimensions of the imprint.

(FF) As used in rule 3745-21-24 of the Administrative Code (pertaining to the control of VOC emissions from flat wood paneling coatings).

(1) "Class 2 hardboard paneling finishes" means finishes which meet the specifications of Voluntary Product Standard PS-59-73 as approved by the American national standards institute.

(2) "Flat wood paneling" means a printed interior panel made of hardwood plywood and thin particle board, natural finish hardwood plywood, hardwood paneling, baseboard, wood flat stock, veneers, doors, door skins, wood flat product skins, tileboard and wallboard.

(3) "Hardboard" means a panel manufactured primarily from inter-felted ligno-cellulosic fibers which are consolidated under heat and pressure in a hot press.

(4) "Hardwood plywood" means a plywood whose surface layer is a veneer of hardwood.

(5) "Natural finish hardwood plywood panel" means a panel whose original grain pattern is enhanced by essentially transparent finishes frequently supplemented by fillers and toners.

(6) "Panel" means a flat piece of wood or wood product usually rectangular and used inside homes and mobile homes for wall decorations.

(7) "Printed interior panel" means a panel whose grain or natural surface is obscured by fillers and basecoats upon which a simulated grain or decorative pattern is printed.

(8) "Thin particleboard" means a manufactured board one-quarter inch or less in thickness made of individual wood particles which have been coated with a binder and formed into flat sheets by pressure.

(9) "Tileboard" means a paneling that has a colored waterproof surface coating.

(10) "Wood flat stock" means an interior panel containing wood including but not limited to redwood stocks, plywood panels, particle boards, composition hardboards, and any other panels containing solid wood or wood product.

(GG) As used in rule 3745-21-25 of the Administrative Code (pertaining to control of VOC emissions from reinforced plastic composites production operations).

(1) "Add-on control device" means an air pollution control device, such as a thermal oxidizer or carbon adsorber that reduces pollution in an air stream by destruction or removal before discharge to the atmosphere.

(2) "AP-42" means the USEPA document "Compilation of Air Pollutant Emissions Factors, Volume I: Stationary Point and Area Sources."

(3) "Atomized mechanical application means" application of resin or gel coat with spray equipment that separates the liquid into a fine mist. This fine mist may be created by forcing the liquid under high pressure through an elliptical orifice, bombarding a liquid stream with directed air jets, or a combination of these techniques.

(4) "Bulk molding compound" or "BMC" means a putty-like molding compound containing resin(s) in a form that is ready to mold. In addition to resins, BMC may contain catalysts, fillers, and reinforcements. Bulk molding compound can be used in compression molding and injection molding operations to manufacture reinforced plastic composites products.

(5) "BMC manufacturing" means a process that involves the preparation of BMC.

(6) "Centrifugal casting" means a process for fabricating cylindrical composites, such as pipes, in which composite materials are positioned inside a rotating

hollow mandrel and held in place by centrifugal forces until the part is sufficiently cured to maintain its physical shape.

(7) "Charge" means the amount of SMC or BMC that is placed into a compression or injection mold necessary to complete one mold cycle.

(8) "Cleaning" means removal of composite materials, such as cured and uncured resin from equipment, finished surfaces, floors, hands of employees, or any other surfaces.

(9) "Clear production gel coat" means an unpigmented, quick-setting resin used to improve the surface appearance and/or performance of composites. It can be used to form the surface layer of any composites other than those used for molds in tooling operations.

(10) "Closed molding" means a grouping of processes for fabricating composites in a way that VOC-containing materials are not exposed to the atmosphere except during the material loading stage (e.g., compression molding, injection molding, and resin transfer molding). Processes where the mold is covered with plastic (or equivalent material) prior to resin application, and the resin is injected into the covered mold are also considered closed molding.

(11) "Composite means" a shaped and cured part produced by using composite materials.

(12) "Composite materials" means the raw materials used to make composites. The raw materials include styrene-containing resins. They may also include gel coat, monomer, catalyst, pigment, filler, and reinforcement.

(13) "Compression molding" means a closed molding process for fabricating composites in which composite materials are placed inside matched dies that are used to cure the materials under heat and pressure without exposure to the atmosphere. The addition of mold paste or in-mold coating is considered part of the closed molding process. The composite materials used in this process are generally SMC or BMC.

(14) "Compression/injection molding" means a grouping of processes that involves the use of compression molding and/or injection molding.

(15) "Continuous casting" means a continuous process for fabricating composites in which composite materials are placed on an in-line conveyor belt to produce cast sheets that are cured in an oven.

(16) "Continuous lamination" means a continuous process for fabricating composites in which composite materials are typically sandwiched between plastic films, pulled through compaction rollers, and cured in an oven. This process is generally used to produce flat or corrugated products on an in-line conveyor.

(17) "Continuous lamination/casting" means a grouping of processes that involves the use of continuous lamination and/or continuous casting.

(18) "Controlled oven VOC emissions" means VOC emissions emitted to the atmosphere from an oven's control device.

(19) "Controlled wet-out area VOC emissions" means VOC emissions emitted to the atmosphere from a wet-out area's control device.

(20) "Corrosion-resistant gel coat" means a gel coat used on a product made with a corrosion-resistant resin that has a corrosion-resistant end-use application.

(21) "Corrosion-resistant end-use applications" means applications where the product is manufactured specifically for an application that requires a level of chemical inertness or resistance to chemical attack above that required for typical reinforced plastic composites products. These applications include, but are not limited to, chemical processing and storage; pulp and paper production; sewer and wastewater treatment; power generation; potable water transfer and storage; food and drug processing; pollution or odor control; metals production and plating; semiconductor manufacturing; petroleum production, refining, and storage; mining; textile production; nuclear materials storage; swimming pools; and cosmetic production, as well as end-use applications that require high strength resins.

(22) "Corrosion-resistant industry standard" means any of the following standards: ASME RTP-1 or Sect. X; ASTM D5364, D3299, D4097, D2996, D2997, D3262, D3517, D3754, D3840, D4024, D4161, D3982, or D3839; ANSI/AWWA C950; UL 215, 1316 or 1746, IAPMO PS-199, or written customer requirements for resistance to specified chemical environments.

(23) "Corrosion-resistant product" means a product made with a corrosion-resistant resin and is manufactured to a corrosion-resistant industry standard, or a food contact industry standard, or is manufactured for corrosion-resistant end-use applications involving continuous or temporary chemical exposures.

(24) "Corrosion-resistant resin" means a resin that either:

(a) Displays substantial retention of mechanical properties when undergoing ASTM C581-03(2008)e1 coupon testing, where the resin is exposed for six months or more to one of the following materials: material with a pH equal to or greater than 12.0 or a pH less than or equal to 3.0, oxidizing or reducing agents, organic solvents, or fuels or additives as defined in 40 CFR 79.2. In the coupon testing, the exposed resin needs to demonstrate a minimum of fifty per cent retention of the relevant mechanical property compared to the same resin in unexposed condition. In addition, the exposed resin needs to demonstrate an increased retention of the relevant mechanical property of at least twenty percentage points when compared to a similarly exposed general-purpose resin. For example, if the general-

purpose resin retains forty-five per cent of the relevant property when tested as specified above, then a corrosion-resistant resin needs to retain at least sixty-five per cent (forty-five per cent plus twenty per cent) of its property. The general-purpose resin used in the test needs to have an average molecular weight of greater than one thousand, be formulated with a one to two ratio of maleic anhydride to phthalic anhydride and one hundred per cent diethylene glycol, and a styrene content between forty-three to forty-eight per cent; or

(b) Complies with industry standards that require specific exposure testing to corrosive media, such as UL 1316, UL 1746, or ASTM F1216-09.

(25) "CR/HS" means corrosion-resistant and/or high strength.

(26) "Doctor box" means the box or trough on an SMC machine into which the liquid resin paste is delivered before it is metered onto the carrier film.

(27) "Fiberglass boat" means a vessel in which either the hull or deck is built from a composite material consisting of a thermosetting resin matrix reinforced with fibers of glass, carbon, aramid, or other material.

(28) "Filament application" means an open molding process for fabricating composites in which reinforcements are fed through a resin bath and wound onto a rotating mandrel. The materials on the mandrel may be rolled out or worked by using nonmechanical tools prior to curing. Resin application to the reinforcement on the mandrel by means other than the resin bath, such as spray guns, pressure-fed rollers, flow coaters, or brushes is not considered filament application.

(29) "Filled resin" means that fillers have been added to a resin such that the amount of inert substances is at least ten per cent by weight of the total resin plus filler mixture. Filler putty made from a resin is considered a filled resin.

(30) "Fillers" means inert substances dispersed throughout a resin, such as calcium carbonate, alumina trihydrate, hydrous aluminum silicate, mica, feldspar, wollastonite, silica, and talc. Materials that are not considered to be fillers are glass fibers or any type of reinforcement and microspheres.

(31) "Fire retardant gel coat" means a gel coat used for low-flame spread/low-smoke products for which resin is used.

(32) "Fluid impingement technology" means a spray gun that produces an expanding non-misting curtain of liquid by the impingement of low-pressure uninterrupted liquid streams.

(33) "Food contact industry standard" means a standard related to food contact application contained in food and drug administration's regulations at 21 CFR 177.2420.

(34) "Gel coat" means a quick-setting resin used to improve surface appearance and/or performance of composites. It can be used to form the surface layer of any composites other than those used for molds in tooling operations.

(35) "Gel coat application" means a process where either clear production, pigmented production, white/off-white or tooling gel coat is applied.

(36) "High performance gel coat" means a gel coat used on products for which national sanitation foundation, United States department of agriculture, ASTM, durability, or other property testing is required.

(37) "High strength gel coat" means a gel coat applied to a product that requires high strength resin.

(38) "High strength resin" means a polyester resin which has a casting tensile strength of ten thousand pounds per square inch or more and which is used for manufacturing products that have high strength requirements such as structural members and utility poles.

(39) "Injection molding" means a closed molding process for fabricating composites in which composite materials are injected under pressure into a heated mold cavity that represents the exact shape of the product. The composite materials are cured in the heated mold cavity.

(40) "Low flame spread/low smoke products" means products that meet the following requirements:

(a) The products shall meet both the applicable flame spread requirements and the applicable smoke requirements.

(b) Interior or exterior building application products shall meet an ASTM E84-10 flame spread index of less than or equal to twenty-five, and smoke developed index of less than or equal to four hundred fifty, or pass national fire protection association 286 room corner burn test with no flash over and total smoke released not exceeding one thousand meters square.

(c) Mass transit application products shall meet an ASTM E162-09 flame spread index of less than or equal to thirty-five and ASTM E662-09 smoke density Ds @ 1.5 minutes less than or equal to one hundred and Ds @ four minutes less than to equal to two hundred.

(d) Duct application products shall meet ASTM E84-10 flame spread index less than or equal to twenty-five and smoke developed index less than or equal to fifty on the interior and/or exterior of the duct.

(41) "Manual resin application" means an open molding process for fabricating composites in which composite materials are applied to the mold by pouring or

by using hands and nonmechanical tools, such as brushes and rollers. Materials are rolled out or worked by using nonmechanical tools prior to curing. The use of pressure-fed rollers and flow coaters to apply resin is not considered manual resin application.

(42) "Mechanical resin application" means an open molding process for fabricating composites in which composite materials (except gel coat) are applied to the mold by using mechanical tools such as spray guns, pressure-fed rollers, and flow coaters. Materials are rolled out or worked by using nonmechanical tools prior to curing.

(43) "Mixing" means the blending or agitation of resin or gel coat in vessels that are 5.00 gallons (18.9 liters) or larger, and includes the mixing of putties or polyputties. Mixing may involve the blending of resin or gel coat with filler, reinforcement, pigments, catalysts, monomers, and any other additives.

(44) "Mold" means a cavity or matrix into or onto which the composite materials are placed and from which the product takes its form.

(45) "Monomer" means an organic compound that combines with itself or other similar compounds by a cross-linking reaction to become a part of a cured thermoset resin.

(46) "Monomer content" means the per cent, by weight, of monomer (styrene, methyl methacrylate, and any other monomer) contained in the resin or gel coat prior to the addition of fillers, catalyst, and promoters.

(47) "Neat gel coat" means the gel coat as purchased from the supplier, but not including any inert fillers.

(48) "Neat gel coat plus" means neat gel coat plus any VOC-containing materials that are added to the gel coat by the supplier or the facility, excluding catalysts and promoters. Neat gel coat plus does include any additions of styrene or methyl methacrylate monomer in any form, including in catalysts and promoters.

(49) "Neat resin" means the resin as purchased from the supplier, but not including any inert fillers.

(50) "Neat resin plus" means neat resin plus any VOC-containing materials that are added to the resin by the supplier or the facility. Neat resin plus does not include any added filler, reinforcements, catalysts, or promoters. Neat resin plus does include any additions of styrene or methyl methacrylate monomer in any form, including in catalysts and promoters.

(51) "Nonatomized mechanical application" means the use of application tools other than brushes to apply resin and gel coat where the application tool has documentation provided by its manufacturer or user that this design of the

application tool has been VOC emissions tested, and the test results showed that use of this application tool results in VOC emissions that are no greater than the VOC emissions predicted by the applicable nonatomized application equation(s) in table 1 to subpart WWWW of 40 CFR 63. In addition, the device shall be operated according to the manufacturer's directions, including instructions to prevent the operation of the device at excessive spray pressures. Examples of nonatomized application include flow coaters, pressure fed rollers, and fluid impingement spray guns.

(52) "Noncorrosion-resistant resin" means any resin other than a corrosion-resistant resin or a tooling resin.

(53) "Noncorrosion-resistant product" means any product other than a corrosion-resistant product or a mold.

(54) "Non-routine manufacture" means that the facility manufactures parts to replace worn or damaged parts of a reinforced plastic composites product, or a product containing reinforced plastic composite parts, that was originally manufactured in another facility. For a part to qualify as non-routine manufacture, it shall be used for repair or replacement, and the manufacturing schedule shall be based on the current or anticipated repair needs of the reinforced plastic composites product, or a product containing reinforced plastic composite parts.

(55) "Operation" means a specific process typically found at a reinforced plastic composites facility. Examples of operations are noncorrosion-resistant manual resin application, corrosion-resistant mechanical resin application, pigmented gel coat application, mixing and VOC-containing materials storage.

(56) "Open molding" means a process for fabricating composites in a way that VOC-containing materials are exposed to the atmosphere. Open molding includes processes such as manual resin application, mechanical resin application, filament application, and gel coat application. Open molding also includes application of resins and gel coats to parts that have been removed from the open mold.

(57) "Pigmented gel coat" means a gel coat that has a color, but does not contain ten per cent of more titanium dioxide by weight. It can be used to form the surface layer of any composites other than those used for molds in tooling operations.

(58) "Plastic composite" means the same as composite.

(59) "Polymer casting" means a process for fabricating composites in which composite materials are ejected from a casting machine or poured into an open, partially open, or closed mold and cured. After the composite materials are poured into the mold, they are not rolled out or worked while the mold is open, except for smoothing the material and/or vibrating the mold to remove bubbles. The composite materials may or may not include reinforcements. Products

produced by the polymer casting process include cultured marble products and polymer concrete.

(60) "Preform injection" means a form of pultrusion where liquid resin is injected to saturate reinforcements in an enclosed system containing one or more chambers with openings only large enough to admit reinforcements. Resin, which drips out of the chamber(s) during the process, is collected in closed piping or covered troughs and then into a covered reservoir for recycle. Resin storage vessels, reservoirs, transfer systems, and collection systems are covered or shielded from the ambient air. Preform injection differs from direct die injection in that the injection chambers are not directly attached to the die.

(61) "Prepreg materials" means reinforcing fabric received precoated with resin which is usually cured through the addition of heat.

(62) "PTE" means permanent total enclosure as defined in paragraph (X) of rule 3745-21-01 of the Administrative Code.

(63) "Pultrusion" means a continuous process for manufacturing composites that have a uniform cross-sectional shape. The process consists of pulling a fiber-reinforcing material through a resin impregnation chamber or bath and through a shaping die, where the resin is subsequently cured. There are several types of pultrusion equipment, such as open bath, resin injection, and direct die injection equipment.

(64) "Reinforced plastic composites production" means operations in which reinforced and/or nonreinforced plastic composites or plastic molding compounds are manufactured using thermoset resins and/or gel coats that contain styrene to produce plastic composites. The resins and gel coats may also contain materials designed to enhance the chemical, physical, and/or thermal properties of the product. Reinforced plastic composites production also includes cleaning, mixing, VOC-containing materials storage, and repair operations associated with the production of plastic composites.

(65) "Repair" means application of resin or gel coat to a part to correct a defect, where the resin or gel coat application occurs after the part has gone through all the steps of its typical production process, or the application occurs outside the normal production area. For the purpose of rule 3745-21-25 of the Administrative Code, rerouting a part back through the normal production line, or part of the normal production line, is not considered repair.

(66) "Resin" means any of a class of organic polymers of natural or synthetic origin used in reinforced plastic composite products to surround and hold fibers, and is solid or semi-solid in the cured state.

(67) "Resin transfer molding" means a process for manufacturing composites whereby catalyzed resin is transferred or injected into a closed mold in which fiberglass reinforcement has been placed.

(68) "Sheet molding compound" or "SMC" means a ready-to-mold putty-like molding compound that contains resin(s) processed into sheet form. The molding compound is sandwiched between a top and a bottom film. In addition to resin(s), it may also contain catalysts, fillers, chemical thickeners, mold release agents, reinforcements, and other ingredients. Sheet molding compound can be used in compression molding to manufacture reinforced plastic composites products.

(69) "Shrinkage controlled resin" means a resin that when promoted, catalyzed, and filled according to the resin manufacturer's recommendations demonstrates less than 0.3 per cent linear shrinkage when tested according to ASTM D2566-93.

(70) "SMC manufacturing" means a process which involves the preparation of SMC.

(71) "Thermoset resin" means a resin that does not become soft or return to a liquid state when it is heated.

(72) "Tooling gel coat" means a gel coat that is used to form the surface layer of molds. Tooling gel coats generally have high heat distortion temperatures, low shrinkage, high barcol hardness, and high dimensional stability.

(73) "Tooling resin" means a resin that is used to produce molds. Tooling resins generally have high heat distortion temperatures, low shrinkage, high barcol hardness, and high dimensional stability.

(74) "Uncontrolled oven VOC emissions" means those VOC emissions emitted from the oven through closed vent systems to the atmosphere and not to a control device. These VOC emissions do not include VOC emissions that may escape into the workplace through the opening of panels or doors on the ovens or other similar fugitive VOC emissions in the workplace.

(75) "Uncontrolled wet-out area VOC emissions" means any or all of the following:

(a) VOC emissions from wet-out areas that do not have any capture and control;

(b) VOC emissions that escape from wet-out area enclosures; and

(c) VOC emissions from wet-out areas that are captured by an enclosure, but are vented to the atmosphere and not to an add-on control device.

(76) "Unfilled" means that there has been no addition of fillers to a resin or that less than ten per cent of fillers by weight of the total resin plus filler mixture has been added.

(77) "Vapor suppressant" means an additive, typically a wax, that migrates to the surface of the resin during curing and forms a barrier to seal in the styrene and reduce styrene emissions.

(78) "Vapor-suppressed resin" means a resin containing a vapor suppressant added for the purpose of reducing styrene emissions during curing.

(79) "VOC-containing materials storage" means an ancillary process within reinforced plastic composites production that involves keeping VOC-containing materials, such as resins, gel coats, catalysts, monomers, and cleaners, in containers or bulk storage tanks for any length of time. Containers may include small tanks, totes, vessels, and buckets.

(80) "Wet-out area" means the area within a continuous lamination process or continuous casting process where the resin is applied extending to the point prior to entering the oven.

(81) "White and off-white gel coat" means a gel coat that contains ten per cent or more titanium dioxide by weight.

(HH) As used in rule 3745-21-27 of the Administrative Code (pertaining to the control of VOC emissions from boat manufacturing operations):

(1) "Application equipment cleaning" means the process of flushing or removing resins and gel coats from the interior or exterior of equipment that is used to apply resin or gel coat in the manufacture of fiberglass parts.

(2) "Atomized application method" means a resin application technology in which the resin leaves the application equipment and breaks into droplets or an aerosol as it travels from the application equipment to the surface of the part. Atomized application methods include, but are not limited to, resin spray guns and resin chopper spray guns.

(3) "Boat" means any type of vessel, other than a seaplane, that can be used for transportation on the water.

(4) "Boat manufacturing facility" means a facility that manufactures the hulls or decks of boats from fiberglass or builds molds to make fiberglass hulls or decks. A facility that manufactures only parts of boats (such as hatches, seats, or lockers) or boat trailers, but does not manufacture boat hulls, decks or molds for fiberglass boat hulls or decks, is not considered a boat manufacturing facility for the purpose of rule 3745-21-27 of the Administrative Code.

(5) "Clear gel coat" means gel coats that are clear or translucent so that underlying colors are visible. Clear gel coats are used to manufacture parts for sale. Clear gel coats do not include tooling gel coats used to build or repair molds.

(6) "Closed molding" means any molding process in which pressure is used to distribute the resin through the reinforcing fabric placed between two mold surfaces to either saturate the fabric or fill the mold cavity. The pressure may be clamping pressure, fluid pressure, atmospheric pressure, or vacuum pressure

used either alone or in combination. The mold surfaces may be rigid or flexible. Closed molding includes, but is not limited to, compression molding with sheet molding compound, infusion molding, resin injection molding (RIM), vacuum-assisted resin transfer molding (VARTM), resin transfer molding (RTM), and vacuum-assisted compression molding. Processes in which a closed mold is used only to compact saturated fabric or remove air or excess resin from the fabric (such as in vacuum bagging), are not considered closed molding. Open molding steps, such as application of a gel coat or skin coat layer by conventional open molding prior to a closed molding process, are not closed molding.

(7) "Cured resin" or "cured gel coat" means resin or gel coat that has changed irreversibly from a liquid to a solid.

(8) "Fiberglass boat" means a vessel in which either the hull or deck is built from a composite material consisting of a thermosetting resin matrix reinforced with fibers of glass, carbon, aramid, or other material.

(9) "Fiberglass hull and deck coatings" means coatings applied to the exterior or interior surface of fiberglass boat hulls and decks on the completed boat. Polyester and vinylester resins and gel coats used in building fiberglass parts are not fiberglass hull and deck coatings for the purpose of this rule.

(10) "Filled resin" or "filled production resin" means a resin to which an inert material has been added to change viscosity, density, shrinkage, or other physical properties.

(11) "Flowcoater" means a nonatomizing application method of applying resins and gel coats to an open mold with a fluid nozzle in a fan pattern with no air supplied to the nozzle.

(12) "Gel coat" means a polyester resin surface coating, either pigmented or clear, that provides a cosmetic enhancement and improves resistance to degradation from exposure to the elements.

(13) "Hand lay-up" means a hand application technique of composite materials using a bucket and a paint brush or a paint roller, or other hand held method of application.

(14) "Mixing" means any operation in which resin or gel coat, including the mixing of putties or polyputties, is combined with additives that include, but are not limited to, fillers, promoters, or catalysts.

(15) "Mold" means the cavity or surface into or on which gel coat, resin, and fibers are placed and from which finished fiberglass parts take their form.

(16) "Mold sealing and release agents" means materials applied to a mold to seal, polish, and lubricate the mold to prevent parts from sticking to the mold. Mold

sealers, waxes, and glazing and buffing compounds are considered mold sealing and release agents for the purposes of this rule.

(17) "Monomer" means a relatively low-molecular-weight organic compound such as styrene that combines with itself, or other similar compounds, by a cross-linking reaction to become a cured thermosetting resin.

(18) "Monomer per cent by weight of a resin" means the weight of the monomer, divided by the weight of the polymer.

(19) "Nonatomized application method" means any application technology in which the resin is not broken into droplets or an aerosol as it travels from the application equipment to the surface of the part. Nonatomized application methods include, but are not limited to, flowcoaters, chopper flowcoaters, pressure-fed resin rollers, resin impregnators, and hand application (for example, paint brush or paint roller).

(20) "Open molding resin and gel coat operation" means any process in which the reinforcing fibers and resin are placed in the mold and are open to the surrounding air while the reinforcing fibers are saturated with resin. For the purposes of this rule, open molding includes operations in which a vacuum bag or similar cover is used to compress an uncured laminate to remove air bubbles or excess resin, or to achieve a bond between a core material and a laminate.

(21) "Pigmented gel coat" means opaque gel coats used to manufacture parts for sale. Pigmented gel coats do not include tooling gel coats used to build or repair molds.

(22) "Polyester resin materials" means unsaturated polyester resins, such as isophthalic, orthophthalic, halogenated, bisphenol A, vinyl ester, or furan resins; cross-linking agents; catalysts; gel coats; inhibitors; accelerators; promoters; and any other material containing VOC used in polyester resin operations.

(23) "Polyester resin operations" means fabricate, rework, repair, or touchup products for commercial, military, or industrial use by mixing, pouring, hand laying-up, impregnating, injecting, forming, winding, spraying, and/or curing by using unsaturated polyester resin materials.

(24) "Pressure-fed roller" means a fabric roller that is fed with continuous supply of catalyzed resins from a mechanical fluid pump.

(25) "Production resin" means any resin used to manufacture parts for sale. Production resins do not include tooling resins used to build or repair molds, or assembly adhesives as defined in this rule.

(26) "Repair" means that portion of the fabrication process that requires the addition of polyester resin materials to portions of a previously fabricated product in order to mend damage.

(27) "Resin" means any thermosetting resin with or without pigment containing styrene (CAS No. 100-42-5) or methyl methacrylate (CAS No. 80-62-6) and used to encapsulate and bind together reinforcement fibers in the construction of fiberglass parts.

(28) "Resin impregnator" means a mechanical nonatomizing composite materials application method in which fiber reinforcement is saturated with resins in a controlled ratio for each specific composite product.

(29) "Roll-out" means the process of using rollers, squeegees, or similar tools to compact reinforcing materials saturated with resin to remove trapped air or excess resin.

(30) "Skin coat" means a layer of resin and fibers applied over the gel coat to protect the gel coat from being deformed by the next laminate layers.

(31) "Tooling gel coat" means the gel coat used to build or repair molds (also known as tools) or prototypes (also known as plugs) from which molds will be made.

(32) "Tooling resin" means the resin used to build or repair molds (also known as tools) or prototypes (also known as plugs) from which molds will be made.

(33) "Touch-up" means that portion of the process that is necessary to cover minor imperfections.

(34) "Vacuum bagging" means any molding technique in which the reinforcing fabric is saturated with resin and then covered with a flexible sheet that is sealed to the edge of the mold and where a vacuum is applied under the sheet to compress the laminate, remove excess resin, or remove trapped air from the laminate during curing. Vacuum bagging does not include processes that meet the definition of closed molding.

(35) "Vinylester resin" means a thermosetting resin containing esters of acrylic or methacrylic acids and having double-bond and ester linkage sites only at the ends of the resin molecules.

(II) As used in rule 3745-21-28 of the Administrative Code (pertaining to the control of VOC emissions from miscellaneous industrial adhesives and sealants).

(1) "Acrylonitrile-butadiene-styrene welding" or "ABS welding" means any process to weld acrylonitrile-butadiene-styrene pipe.

(2) "Adhesive" means any chemical substance that is applied for the purpose of bonding two surfaces together other than by mechanical means.

(3) "Adhesive primer" means any product intended by the manufacturer for application to a substrate, prior to the application of an adhesive, to provide a bonding surface.

(4) "Aerospace component" means the fabricated part, assembly of parts or completed unit of any aircraft, helicopter, missile, or space vehicle, including passenger safety equipment.

(5) "Aerosol adhesive" means an adhesive packaged as an aerosol product in which the spray mechanism is permanently housed in a non-refillable can designed for handheld application without the need for ancillary hoses or spray equipment.

(6) "Application process" means a series of one or more adhesive applicators and any associated drying area or oven, or both, wherein an adhesive is applied, dried or cured, or both. An application process ends at the point where the adhesive is dried or cured, or prior to any subsequent application of a different adhesive. It is not necessary for an application process to have an oven or flash-off area.

(7) "Architectural sealant or sealant primer" means any sealant or sealant primer intended by the manufacturer to be applied to stationary structures, including mobile homes, and their appurtenances. Appurtenances to an architectural structure include, but are not limited to: hand railings, cabinets, bathroom and kitchen fixtures, fences, rain gutters and downspouts, and windows.

(8) "Automotive glass adhesive primer" means an adhesive primer labeled by the manufacturer to be applied to automotive glass prior to installation of the glass using an adhesive/sealant. This primer improves the adhesion to pinch weld and blocks ultraviolet light.

(9) "CARB" means the California air resources board.

(10) "Ceramic tile installation adhesive" means any adhesive intended by the manufacturer for use in the installation of ceramic tiles.

(11) "Chlorinated polyvinyl chloride plastic" or "CPVC plastic" means a polymer of the vinyl chloride monomer that contains sixty-seven per cent chlorine and is normally identified with a CPVC marking.

(12) "Chlorinated polyvinyl chloride welding adhesive" or "CPVC welding adhesive" means an adhesive labeled for welding of chlorinated polyvinyl chloride plastic.

(13) "Cleanup solvent" means a VOC-containing material used to remove a loosely held uncured (i.e., not dry to the touch) adhesive or sealant from a substrate, or clean equipment used in applying a material.

(14) "Computer diskette jacket manufacturing adhesive" means any adhesive intended by the manufacturer to glue the fold-over flaps to the body of a vinyl computer diskette jacket.

(15) "Contact bond adhesive" means an adhesive that:

(a) Is designed for application to both surfaces to be bonded together;

(b) Is allowed to dry before the two surfaces are placed in contact with each other;

(c) Forms an immediate bond that is impossible, or difficult, to reposition after both adhesive-coated surfaces are placed in contact with each other; and

(d) Does not need sustained pressure or clamping of surfaces after the adhesive-coated surfaces have been brought together using sufficient momentary pressure to establish full contact between both surfaces.

Contact adhesive does not include rubber cements that are primarily intended for use on paper substrates. Contact adhesive also does not include vulcanizing fluids that are designed and labeled for tire repair only.

(16) "Cove base" means a flooring trim unit, generally made of vinyl or rubber, having a concave radius on one edge and a convex radius on the opposite edge that is used in forming a junction between the bottom wall course and the floor or to form an inside corner.

(17) "Cove base installation adhesive" means any adhesive intended by the manufacturer to be used for the installation of cove base or wall base on a wall or vertical surface at floor level.

(18) "Cyanoacrylate adhesive" means any adhesive with a cyanoacrylate content of at least ninety-five per cent by weight.

(19) Digital printing" means a print-on-demand method of printing in which an electronic output device transfers variable data, in the form of an image, from a computer to a variety of substrates. Digital printing methods include, but are not limited to, inkjet printing, electrophotographic printing, dye sublimation printing, thermal wax printing and solid ink printing.

(20) "Flexible vinyl" means non-rigid polyvinyl chloride plastic with at five per cent by weight plasticizer content.

(21) "Fiberglass" means a material consisting of extremely fine glass fibers.

(22) "Indoor floor covering installation adhesive" means any adhesive intended by the manufacturer for use in the installation of wood flooring, carpet, resilient tile, vinyl tile, vinyl backed carpet, resilient sheet and roll, or artificial grass.

Adhesives used to install ceramic tile and perimeter bonded sheet flooring with vinyl backing onto a non-porous substrate, such as flexible vinyl, are excluded from this category.

(23) "Laminate" means a product made by bonding together two or more layers of material.

(24) "Marine deck sealant" or "marine deck sealant primer" means any sealant or sealant primer labeled for application to wooden marine decks.

(25) "Medical equipment manufacturing" means the manufacture of medical devices, such as, but not limited to, catheters, heart valves, blood cardioplegia machines, tracheostomy tubes, blood oxygenators, and cardiatory reservoirs.

(26) "Metal to urethane/rubber molding or casting adhesive" means any adhesive intended by the manufacturer to bond metal to high density or elastomeric urethane or molded rubber materials, in heater molding or casting processes, to fabricate products such as rollers for computer printers or other paper handling equipment.

(27) "Multipurpose construction adhesive" means any adhesive intended by the manufacturer for use in the installation or repair of various construction materials including but not limited to drywall subfloor, panel, fiberglass reinforced plastic, ceiling tile and acoustical tile.

(28) "Non-membrane roof installation/repair adhesive" means any adhesive intended by the manufacturer for use in the installation or repair of nonmembrane roofs and that is not intended for the installation of prefabricated single-ply flexible roofing membrane, including but not limited to plastic or asphalt roof cement, asphalt roof coating and cold application cement.

(29) "Outdoor floor covering installation adhesive" means any adhesive intended by the manufacturer for use in the installation of floor covering that is not in an enclosure and that is exposed to ambient weather conditions during normal use.

(30) "Panel installation" means the installation of plywood, pre-decorated hardboard (or tileboard), fiberglass reinforced plastic, and similar pre-decorated or non-decorated panels to studs or solid surfaces using an adhesive formulated for that purpose.

(31) "Perimeter bonded sheet flooring installation" means the installation of sheet flooring with vinyl backing onto a nonporous substrate using an adhesive designed to be applied only to a strip of up to four inches wide around the perimeter of the sheet flooring.

(32) "Plastic cement welding adhesive" means any adhesive intended by the manufacturer for use to dissolve the surface of plastic to form a bond between mating surfaces.

(33) "Plastic cement welding adhesive primer" means any primer intended by the manufacturer for use to prepare plastic substrates prior to bonding or welding.

(34) "Plastic foam" means foam constructed of plastics.

(35) "Plastics" means synthetic materials chemically formed by the polymerization of organic (carbon-based) substances. Plastics are usually compounded with modifiers, extenders, and/or reinforcers and are capable of being molded, extruded, cast into various shapes and films or drawn into filaments.

(36) "Polyvinyl chloride plastic" or "PVC plastic" means a polymer of the chlorinated vinyl monomer that contains fifty-seven per cent chlorine.

(37) "Polyvinyl chloride welding adhesive" or "PVC welding adhesive" means any adhesive intended by the manufacturer for use in the welding of PVC plastic pipe.

(38) "Porous material" means a substance that has tiny openings, often microscopic, in which fluids may be absorbed or discharged, including but not limited to, wood, paper and corrugated paperboard.

(39) "Reactive diluent" means a liquid that is a reactive organic compound during application and one in that, through chemical and/or physical reactions, such as polymerization, twenty per cent or more of the reactive organic compound becomes an integral part of a finished material.

(40) "Roadway sealant" means any sealant intended by the manufacturer for application to public streets, highways and other surfaces, including but not limited to curbs, berms, driveways and parking lots.

(41) "Rubber" means any natural or manmade rubber substrate, including but not limited to, styrene-butadiene rubber, polychloroprene (neoprene), butyl rubber, nitrile rubber, chlorosulfonated polyethylene and ethylene propylene diene terpolymer.

(42) "SCAQMD" means the south coast air quality management district, a part of the California air resources board, which is responsible for the regulation of air quality in the state of California.

(43) "Sealant primer" means any product intended by the manufacturer for application to a substrate, prior to the application of a sealant, to enhance the bonding surface.

(44) "Sealant" means any material with adhesive properties that is formulated primarily to fill, seal, waterproof or weatherproof gaps or joints between two surfaces. Sealants include sealant primers and caulks.

(45) "Sheet-applied rubber installation" means the process of applying sheet rubber liners by hand to metal or plastic substrates to protect the underlying substrate from corrosion or abrasion. These operations also include laminating sheet rubber to fabric by hand.

(46) "Single-ply roof membrane" means a prefabricated single sheet of rubber, normally ethylene-propylenediene terpolymer, that is field applied to a building roof using one layer of membrane material.

(47) "Single-ply roof membrane installation/repair adhesive" means any adhesive labeled for use in the installation or repair of single-ply roof membrane. Installation includes, as a minimum, attaching the edge of the membrane to the edge of the roof and applying flashings to vents, pipes and ducts that protrude through the membrane. Repair includes gluing the edges of torn membrane together, attaching a patch over a hole and reapplying flashings to vents, pipes or ducts installed through the membrane.

(48) "Single-ply roof membrane adhesive primer" means any primer labeled for use to clean and promote adhesion of the single-ply roof membrane seams or splices prior to bonding.

(49) "Single-ply roof membrane sealant" means any sealant labeled for application to single-ply roof membrane.

(50) "Solvent" means organic compounds that are used as diluents, thinners, dissolvers, viscosity reducers, cleaning agents or other related uses.

(51) "Structural glazing adhesive" means any adhesive intended by the manufacturer to apply glass, ceramic, metal, stone or composite panels to exterior building frames.

(52) "Subfloor installation" means the installation of subflooring material over floor joists, including the construction of any load bearing joists. Subflooring is covered by a finish surface material.

(53) "Surface preparation solvent" means a solvent used to remove dirt, oil and other contaminants from a substrate prior to the application of a primer, adhesive or sealant.

(54) "Thin metal laminating adhesive" means any adhesive intended by the manufacturer for use in bonding multiple layers of metal to metal or metal to plastic in the production of electronic or magnetic components in which the thickness of the bond line(s) is less than 0.25 millimeters.

(55) "Tire repair" means a process that includes expanding a hole, tear, fissure or blemish in a tire casing by grinding or gouging, applying adhesive and filling the hole or crevice with rubber.

(56) "Tire tread adhesive" means any adhesive intended by the manufacturer for application to the back of precure tread rubber and to the casing and cushion rubber. Tire tread adhesive may also be used to seal buffed tire casings to prevent oxidation while the tire is being prepared for a new tread.

(57) "Traffic marking tape" means preformed reflective film intended by the manufacturer for application to public streets, highways and other surfaces, including but not limited to curbs, berms, driveways and parking lots.

(58) "Traffic marking tape adhesive primer" means any primer intended by the manufacturer for application to surfaces prior to installation of traffic marking tape.

(59) "Undersea-based weapons systems components" means the fabrication of parts, assembly of parts or completed units of any portion of a missile launching system used on undersea ships.

(60) "Waterproof resorcinol glue" means a two-part resorcinol-resin-based adhesive designed for applications where the bond line must be resistant to conditions of continuous immersion in fresh or salt water.

(JJ) Reference to materials. This chapter includes references to certain matter or materials. The text of the referenced materials is not included in the rules contained in this chapter. Information on the availability of the referenced materials as well as the date of, and/or the particular edition or version of the material is included in this rule. For materials subject to change, only the specific versions specified in this rule are referenced. Material is referenced as it exists on the effective date of this rule. Except for subsequent annual publication of existing (unmodified) Code of Federal Regulation compilations, any amendment or revision to a referenced document is not applicable unless and until this rule has been amended to specify the new dates.

(1) Availability. The referenced materials are available as follows:

(a) "American National Standards Institute" (ANSI). Information and copies of publications may be obtained by writing to: "Global Engineering Documents 15 Inverness Way, East Englewood, CO 80112." Publications are also available for ordering at http://webstore.ansi.org/ansidocstore/default.asp. The ANSI publications are also available for inspection and copying at most public libraries and "The State Library of Ohio."

(b) "American Petroleum Institute" (API). Information and copies of publications may be obtained by writing to: "API Publications Global Engineering Documents, 15 Inverness Way East, M/S C303B, Englewood, CO 80112-5776." Publications are also available for ordering at www.global.ihs.com. The API publications are also available for inspection and copying at most public libraries and "The State Library of Ohio."

(c) "American Society for Testing Materials" (ASTM). Information and copies of documents may be obtained by writing to: "ASTM International, 100 Bar Harbor Drive, P.O. Box C700, West Conshohocken, Pennsylvania 19426-2959." These documents are also available for purchase at www.astm.org. ASTM documents are also available for inspection and copying at most public libraries and "The State Library of Ohio."

(d) "American Architectural Manufacturers Association" (AAMA). Information and copies of documents may be obtained by writing to: "AAMA, 1827 Walden Office Square, Suite 550 Schaumburg, IL 60173." These documents area also available for purchase at www.aamanet.org. AAMA documents are also available for inspection and copying at most public libraries and "The State Library of Ohio."

(e) "California air resources board" (CARB) certification. Information and copies of executive orders, approval letters, equipment advisories, certification procedures and equivalent test procedures may be obtained by writing to: "California Air Resources Board, Monitoring and Laboratory Division, P.O. Box 2815, Sacramento, CA, 95812-2815" or by calling (916) 327-0900. The full text of all CARB certification documents are also available in electronic format at http://www.arb.ca.gov/vapor/vapor.htm."

(f) "California Code of Regulations." Copies of regulations may be obtained by writing to: " West Customer Service, P.O. Box 64833, St. Paul, MN 55164-0833" or by calling 1-800-888-3600. The full text of regulations are also available in electronic format at http://ccr.oal.ca.gov/."

(g) Clean Air Act. Information and copies may be obtained by writing to: "Superintendent of Documents, Attn: New Orders, PO Box 371954, Pittsburgh, PA 15250-7954." The full text of the Act as amended in 1990 is also available in electronic format at www.epa.gov/oar/caa/. A copy of the Act is also available for inspection and copying at most public libraries and "The State Library of Ohio."

(h) "Code of Federal Regulations" (CFR). Information and copies may be obtained by writing to: "Superintendent of Documents, Attn: New Orders, PO Box 371954, Pittsburgh, PA 15250-7954." The full text of the CFR is also available in electronic format at www.access.gpo.gov/nara/cfr/. The CFR compilations are also available for inspection and copying at most public libraries and "The State Library of Ohio."

(i) Compilation of air pollutant emission factors, AP-42. Information and copies may be obtained by writing to: "Superintendent of Documents, Attn: New Orders, PO Box 371954, Pittsburgh, PA 15250-7954." The full text of the compilation of air pollutant emission factors, AP-42, is also available in electronic format at http://www.epa.gov/ttn/chief/ap42/index.html. The compilation of air pollutant emission factors, AP-42, are also available for

inspection and copying at most public libraries and "The State Library of Ohio."

(j) "Control of Volatile Organic Compound Emissions from Reactor Processes and Distillation Operations Processes in the Synthetic Organic Chemical Manufacturing Industry." Information and copies may be obtained by writing to: "U.S. EPA/NSCEP, P.O. Box 42419, Cincinnati, Ohio 45242-0419." This document is also available for ordering at http://yosemite.epa.gov/ncepihom/nsCatalog.nsf/SearchPubs?OpenForm. A copy of the this document is also available for inspection and copying at most public libraries and "The State Library of Ohio."

(k) Federal Insecticide, Fungicide, and Rodenticide Act. Information and copies may be obtained by writing to: "Superintendent of Documents, Attn: New Orders, PO Box 371954, Pittsburgh, PA 15250-7954." The full text of the Act is also available in electronic format at www.epa.gov/oar/caa/. A copy of the Act is also available for inspection and copying at most public libraries and "The State Library of Ohio."

(l) "Federal Register" (FR). Information and copies may be obtained by writing to: "Superintendent of Documents, Attn: New Orders, PO Box 371954, Pittsburgh, PA 15250-7954." Online access to the Federal Register is available at http://www.gpoaccess.gov/nara/index.html. A copy of the Federal Register is also available for inspection and copying at most public libraries and "The State Library of Ohio."

(m) "Guidance for estimating capital and annual costs of air pollution systems." Information and copies may be ordered by writing to the Ohio EPA at: "50 West Town St., Suite 700, Columbus, Ohio, 43215". This document is also available in electronic format at http://www.epa.ohio.gov/dapc/engineer/eguides.aspx. A copy of the document is also available for inspection and copying at most public libraries and "The State Library of Ohio."

(n) "Guidelines for determining capture efficiency." Information and copies may be obtained by writing to: "Office of Air Quality Planning and Standards (OAQPS), TTN/OAR P&G Webmaster, Mail Code D143-02, Research Triangle Park, NC, 27711." This document is also available in electronic format at http://www.epa.gov/ttncaaa1/t1/meta/m28508.html. A copy of the document is also available for inspection and copying at most public libraries and "The State Library of Ohio."

(o) "Methods and Guidance for Analysis of Water." Information and copies may be ordered by writing to: "National Technical Information Service, Springfield, Virginia, 22161." or by calling 1-703-605-6000. This document is also available for ordering at http://www.ntis.gov/index.asp. A copy of the document is also available for inspection and copying at most public libraries and "The State Library of Ohio".

(p) "Motor Vehicle Safety Standards." Information and copies may be obtained by writing to: "U.S. Government Printing Office, Superintendent of Documents, Mail Stop SSOP, Washington, DC 20402-9328." These documents are also available in electronic format at http://www.gpoaccess.gov/cfr/index.html. A copy of the documents are also available for inspection and copying at most public libraries and "The State Library of Ohio."

(q) "National Fire Protection Association" (NFPA). Information on the National Fire Protection Association codes may be obtained by contacting the association at " 1 Batterymarch Park, Quincy, Massachusetts 02169-7471," or by calling 617-770-3000. Codes may be ordered on line at www.nfpa.org/catalog/home/index.asp. Copies of the code are available at most public libraries and "The State Library of Ohio."

(r) "Protocol for Determining the Daily Volatile Organic Compound Emission Rate of Automobile and Light-Duty Truck Topcoat Operations." EPA-453/R-08-002 Information and copies may be ordered by writing to: "US EPA Office of Air Quality Planning and Standards (OAQPS) TTN EMC, Research Triangle Park, NC 27711" or by calling 1-919-541-5233 . A copy of this protocol is also available electronically at: http://www.epa.gov/ttn/oarpg/t1/ctg/autotruck_primer_topcoat_protocol_ 093008.pdf. A copy of protocol is also available for inspection and copying at most public libraries and "The State Library of Ohio."

(s) "Regulatory Guide 1.54 - Service Level I, II and III Protective Coatings Applied to Nuclear Plants;" Information and copies may be obtained by writing to: "Distribution Services Section, U.S. Nuclear Regulatory Commission, Washington, DC 20555-0001"; or by fax at (301)415-2289. A copy of this guide is also available in electronic format at: http://www.nrc.gov/reading-rm/doc-collections/reg-guides/power reactors/active/. A copy of the manual is also available for inspection and copying at most public libraries and "The State Library of Ohio."

(t) "South Coast Air Quality Management District (SCAQMD)". Information and copies of documents may be obtained by writing to: "South Coast AQMD, Public Records Coordinator/Public Records Unit, 21865 Copley Dr., Diamond Bar, CA, 91765." These documents are also available at http://www.aqmd.gov/tao/methods/labmethtoc.html. SCAQMD documents are also available for inspection and copying at most public libraries and "The State Library of Ohio."

(u) "Standard Industrial Classification Manual" (SICM). Information and copies may be ordered by writing to: "U.S. Department of Commerce, Technology Administration, National Technical Information Service, Springfield, Virginia, 22161." or by calling 1-800-553-6847. A copy of the manual is

also available for inspection and copying at most public libraries and "The State Library of Ohio."

(v) "Standard Methods for the Examination of Water and Wastewater." Information and copies may be ordered by writing to: "American Public Health Association, Publications Sales, PO Box 753, Waldorf, MD 20604-0753," or by calling 1-301-893-1894. This document is also available for ordering at www.apha.org. A copy of the document is also available for inspection and copying at most public libraries and "The State Library of Ohio."

(w) "SW-846 Test Methods for Evaluating Solid Waste, Physical/Chemical Methods." Information and copies may be obtained by writing to: "Superintendent of Documents, Attn: New Orders, PO Box 371954, Pittsburgh, PA 15250-7954." These documents are also available in electronic format at http://www.epa.gov/epaoswer/hazwaste/test/main.htm. SW-846 methods are also available for inspection and copying at most public libraries and "The State Library of Ohio."

(x) USEPA-approved alternative test methods. Information and copies may be obtained by writing to: "Source Measurement Technology Group Emission Measurement Center, U.S. EPA (D205-02), Research Triangle Park, NC 27711." These documents area also available in electronic format at http://www.epa.gov/ttnemc01/approalt.html. Alternative test methods are also available for inspection and copying at most public libraries and "The State Library of Ohio."

(y) USEPA conditional test method. Information and copies may be obtained by writing to: "Source Measurement Technology Group Emission Measurement Center, U.S. EPA (D205-02), Research Triangle Park, NC 27711." Conditional test methods are also available for inspection and copying at most public libraries and "The State Library of Ohio."

(z) "WATER9" is a Windows based computer wastewater treatment model. A copy of the program can be obtained by writing to: "US EPA Office of Air Quality Planning and Standards (OAQPS), Info CHIEF Help Desk, Mail Code D205-01, Research Triangle Park, NC 27711"; or calling 1-919-541-5610. This model is also available for downloading at http://www.epa.gov/ttn/chief/software/water/.

(2) Referenced materials.

(a) 29 CFR 1926, Subpart F; "Fire Protection and Prevention"; 44 FR 8577, Feb. 9, 1979; 44 FR 20940, Apr. 6, 1979, as amended at 51 FR 25318, July 11, 1986; 58 FR 35162, June 30, 1993; 61 FR 31432, June 20, 1996; 63 FR 33469, June 18, 1998.

(b) 40 CFR 50.100; "Definitions"; 51 FR 40661, Nov. 7, 1986, as amended at 52 FR 24712, July 1, 1987; 57 FR 3945, Feb. 3, 1992; 61 FR 4590, Feb. 7, 1996; 61 FR 16060, Apr. 11, 1996; 61 FR 30162, June 14, 1996; 61 FR 52850, Oct. 8, 1996; 62 FR 44903, Aug. 25, 1997; 63 FR 9151, Feb. 24, 1998; 63 FR 17333, Apr. 9, 1998; 69 FR 69298, 69304, Nov. 29, 2004; 70 FR 53935, Sept. 13, 2005.

(c) 40 CFR 60.8; "Performance tests"; 36 FR 24877, Dec. 23, 1971, as amended at 39 FR 9314, Mar. 8, 1974; 42 FR 57126, Nov. 1, 1977; 44 FR 33612, June 11, 1979; 54 FR 6662, Feb. 14, 1989; 54 FR 21344, May 17, 1989; 64 FR 7463, Feb. 12, 1999.

(d) 40 CFR 60.13; "Monitoring requirements"; 40 FR 46255, Oct. 6, 1975; 40 FR 59205, Dec. 22, 1975, as amended at 41 FR 35185, Aug. 20, 1976; 48 FR 13326, Mar. 30, 1983; 48 FR 23610, May 25, 1983; 48 FR 32986, July 20, 1983; 52 FR 9782, Mar. 26, 1987; 52 FR 17555, May 11, 1987; 52 FR 21007, June 4, 1987; 64 FR 7463, Feb. 12, 1999; 65 FR 48920, Aug. 10, 2000; 65 FR 61749, Oct. 17, 2000; 66 FR 44980, Aug. 27, 2001.

(e) 40 CFR 60.18; "General control device requirements"; 51 FR 2701, Jan. 21, 1986, as amended at 63 FR 24444, May 4, 1998; 65 FR 61752, Oct. 17, 2000.

(f) 40 CFR 60.485; "Test methods and procedures"; 54 FR 6678, Feb. 14, 1989, as amended at 54 FR 27016, June 27, 1989; 65 FR 61763, Oct. 17, 2000.

(g) 40 CFR 60.503; "Test methods and procedures"; 54 FR 6678, Feb. 14, 1989; 54 FR 21344, Feb. 14, 1989, as amended at 68 FR 70965, Dec. 19, 2003.

(h) 40 CFR 63.115; "Process vent provisions--methods and procedures for process vent group determination"; 59 FR 19468, Apr. 22, 1994, as amended at 62 FR 2746, Jan. 17, 1997; 66 FR 6931, Jan. 22, 2001.

(i) 40 CFR 63.134; "Process wastewater provisions--surface impoundments"; 62 FR 2754, Jan. 17, 1997, as amended at 64 FR 20191, Apr. 26, 1999.

(j) 40 CFR 63.750; "Test methods and procedures"; 60 FR 45956, Sept. 1, 1996, as amended at 63 FR 15021, Mar. 27, 1998; 63 FR 46534, Sept. 1, 1998; 65 FR 62215, Oct. 17, 2000.

(k) 40 CFR 63.801; "National Emission Standards for Wood Furniture Manufacturing Operations, Definitions"; 60 FR 62936, Dec. 7, 1995, as amended at 62 FR 30260, June 3, 1997; 62 FR 31363, June 9, 1997; 63 FR 71380, Dec. 28, 1998.

(l) 40 CFR 63.803; "National Emission Standards for Wood Furniture Manufacturing Operations, Work Practice Standards"; 60 FR 62936, Dec. 7,

1995, as amended at 63 FR 71380, Dec. 28, 1998; 68 FR 37353, June 23, 2003.

(m) 40 CFR 63.3165; "How do I determine the emission capture system efficiency?"; as published in the July 1, 2010 Code of Federal Regulations.

(n) 40 CFR 63.3166; "How do I determine the add-on control device emission destruction or removal efficiency?"; as published in the July 1, 2010 Code of Federal Regulations.

(o) 40 CFR 63.3167; "How do I establish the add-on control device operating limits during the performance test?"; as published in the July 1, 2010 Code of Federal Regulations.

(p) 40 CFR 63.3168; "What are the requirements for continuous parameter monitoring system installation, operation, and maintenance?"; as published in the July 1, 2010 Code of Federal Regulations.

(q) 40 CFR 82.4; "Prohibitions for class I controlled substances"; 60 FR 24986, May 10, 1995.

(r) 40 CFR 264.228; "Closure and post-closure care"; 47 FR 32357, July 26, 1982, as amended at 50 FR 28748, July 15, 1985; 57 FR 3488, Jan. 29, 1992.

(s) 40 CFR 268.4; "Treatment surface impoundment exemption"; 51 FR 40638, Nov. 7, 1986; 52 FR 21016, June 4, 1987, as amended at 52 FR 25788, July 8, 1987; 53 FR 31212, Aug. 17, 1988; 62 FR 26019, May 12, 1997; 63 FR 28639, May 26, 1998.

(t) 40 CFR Part 50, Appendix C; "Measurement Principle and Calibration Procedure for the Measurement of Carbon Monoxide in the Atmosphere (Non-Dispersive Infrared Photometry)"; 47 FR 54922, Dec. 6, 1982; 48 FR 17355, Apr. 22, 1983.

(u) 40 CFR Part 50, Appendix D; "Measurement Principle and Calibration Procedure for the Measurement of Ozone in the Atmosphere"; 44 FR 8224, Feb. 8, 1979, as amended at 62 FR 38895, July 18, 1997.

(v) 40 CFR Part 50, Appendix H; "Interpretation of the 1-Hour Primary and Secondary National Ambient Air Quality Standards for Ozone"; 44 FR 8220, Feb. 8, 1979, as amended at 62 FR 38895, July 18, 1997.

(w) 40 CFR Part 50, Appendix I; "Interpretation of the 8-Hour Primary and Secondary National Ambient Air Quality Standards for Ozone"; 62 FR 38895, July 18, 2008.

(x) 40 CFR Part 53; "Ambient Air Monitoring Reference and Equivalent Methods"; as published in the July 1, 2010 Code of Federal Regulations.

(y) 40 CFR Part 60, Appendix A; "Standards of Performance for New Stationary Sources"; as published in the July 1, 2010 Code of Federal Regulations.

(z) 40 CFR Part 60, Appendix J; proposed December 9, 1998; 63 FR 67988.

(aa) 40 CFR Part 60, Subpart BBB; "Standards of Performance for the Rubber Tire Manufacturing Industry"; 52 FR 34874, Sept. 15, 1987, as amended at 52 FR 37874, Oct. 9, 1987; 54 FR 38635-38638, Sept. 19, 1989; 65 FR 61764-61765, Oct. 17, 2000.

(bb) 40 CFR Part 60, Subpart GG; "Standards of Performance for Stationary Gas Turbines"; as published in the July 1, 2010 Code of Federal Regulations.

(cc) 40 CFR Part 60, Subpart VV; "Standards of Performance for Equipment Leaks of VOC in the Synthetic Organic Chemicals Manufacturing Industry"; as published in the July 1, 2010 Code of Federal Regulations.

(dd) 40 CFR Part 60, Subpart BBB; "Standards of Performance for the Rubber Tire Manufacturing Industry"; 52 FR 34874, Sept. 15, 1987, as amended at 52 FR 37874, Oct. 9, 1987; 54 FR 38635-38638, Sept. 19, 1989; 65 FR 61764-61765, Oct. 17, 2000.

(ee) 40 CFR Part 60, Subpart III; "Standards of Performance for New Stationary Sources, Standards of Performance for Volatile Organic Compound (VOC) Emissions From the Synthetic Organic Chemical Manufacturing Industry (SOCMI) Air Oxidation Unit Processes"; 55 FR 26922, June 29, 1990; as amended at 55 FR 26922, June 29, 1990; 55 FR 36932, Sept. 7, 1990; 65 FR 61769-61773, Oct. 17, 2000; 65 FR 78278, Dec. 14, 2000.

(ff) 40 CFR Part 60, Subpart NNN; "Standards of Performance for New Stationary Sources, Standards of Performance for Volatile Organic Compound (VOC) Emissions From Synthetic Organic Chemical Manufacturing Industry (SOCMI) Distillation Operations"; 55 FR 26922-26942, June 29, 1990 as amended at; 55 FR 36932, Sept. 7, 1990; 60 FR 58237, Nov. 27, 1995; 55 FR 26942, June 29, 2000; 65 FR 61774-61778, Oct. 17, 2000; 65 FR 78279, Dec. 14, 2000.

(gg) 40 CFR Part 60, Subpart RRR; "Standards of Performance for New Stationary Sources, Standards of Performance for Volatile Organic Compound Emissions From Synthetic Organic Chemical Manufacturing Industry (SOCMI) Reactor Processes"; 58 FR 45962, Aug. 31, 1993 as amended at 60 FR 58238, Nov. 27, 1995; 65 FR 61778, Oct. 17, 2000; 65 FR 78279, Dec. 14, 2000.

(hh) 40 CFR Part 63; "National Emission Standards for Hazardous Air Pollutants for Source Categories"; as published in the July 1, 2010 Code of Federal Regulations.

(ii) 40 CFR Part 63, Appendix A; "Test methods"; as published in the July 1, 2010 Code of Federal Regulations.

(jj) 40 CFR Part 63, Subpart G; "National emissions standards for hazardous air pollutants from the synthetic organic chemical manufacturing industry for process vents, storage vessels, transfer operations, and wastewater"; as published in the July 1, 2010 Code of Federal Regulations.

(kk) 40 CFR Part 63, Subpart H; "National Emission Standards for Organic Hazardous Air Pollutants for Equipment Leaks"; as published in the July 1, 2010 Code of Federal Regulations.

(ll) 40 CFR Part 63, Subpart T; "National Emission Standards for Halogenated Solvent Cleaning"; 59 FR 61805-61818, Dec. 2, 1994; 59 FR 67750, Dec. 30, 1994, as amended at 60 FR 29485, June 5, 1995; 63 FR 24751, May 5, 1998; 63 FR 68400, Dec. 11, 1998; 64 FR 67798-67802, Dec. 3, 1999; 64 FR 69643, Dec. 14, 1999; 65 FR 54422-54423, Sept. 8, 2000; 68 FR 37349, June 23, 2003.

(mm) 40 CFR Part 63, Subpart CC; "National Emission Standards for Hazardous Air Pollutants From Petroleum Refineries"; as published in the July 1, 2010 Code of Federal Regulations.

(nn) 40 CFR Part 63, Subpart JJJ; "National emissions standards for hazardous air pollutants: group IV polymers and resins"; as published in the July 1, 2010 Code of Federal Regulations.

(oo) 40 CFR Part 63, Subpart FFFF; "National emission standards for hazardous air pollutants: miscellaneous organic chemical manufacturing"; as published in the July 1, 2010 Code of Federal Regulations.

(pp) 40 CFR Part 63, Subpart PPPP, Appendix A; "Determination of Weight Volatile Matter Content and Weight Solids Content of Reactive Adhesives," 69 FR 20990, Apr. 19, 2004.

(qq) 40 CFR Part 63, Subpart VVVV; "National Emission Standards for Hazardous Air Pollutants for Boat Manufacturing"; as published in the July 1, 2010 Code of Federal Regulations.

(rr) 40 CFR Part 63, Subpart WWWW; "National Emissions Standards for Hazardous Air Pollutants: Reinforced Plastic Composites Production"; as published in the July 1, 2010 Code of Federal Regulations.

(ss) 40 CFR Part 122; "EPA Administered Permit Programs: The National Pollutant Discharge Elimination System"; as published in the July 1, 2010 Code of Federal Regulations.

(tt) 40 CFR Part 136; "Guidelines Establishing Test Procedures for the Analysis of Pollutants"; as published in the July 1, 2010 Code of Federal Regulations.

(uu) 40 CFR Part 144; "Underground Injection Control Program"; as published in the July 1, 2010 Code of Federal Regulations.

(vv) 40 CFR Part 261; "Identification and Listing of Hazardous Waste"; as published in the July 1, 2010 Code of Federal Regulations.

(ww) 40 CFR Part 264, Subpart O; "Standards for Owners and Operators of Hazardous Waste Treatment, Storage and Disposal Facilities; Incinerators"; as published in the July 1, 2010 Code of Federal Regulations.

(xx) 40 CFR Part 265, Subpart O; "Interim Status Standards for Owners and Operators of Hazardous Waste Treatment, Storage and Disposal Facilities; Incinerators"; as published in the July 1, 2010 Code of Federal Regulations.

(yy) 40 CFR Part 266, Subpart H; "Hazardous Waste Burned in Boilers and Industrial Furnaces"; as published in the July 1, 2010 Code of Federal Regulations.

(zz) 40 CFR Part 270; "EPA Administered Permit Programs: The Hazardous Waste Permit Program"; as published in the July 1, 2010 Code of Federal Regulations.

(aaa) 46 CFR Subchapter Q containing Parts 159 to 165; "Equipment, construction, and materials: specifications and approval"; as published in the July 1, 2010 Code of Federal Regulations.

(bbb) 46 CFR Subchapter T containing Parts 175 to 187; "Small passenger vessels (under 100 gross tons)"; as published in the July 1, 2010 Code of Federal Regulations.

(ccc) "American Petroleum Institute Publication 2517"; "Evaporation Loss from External Floating-Roof Tanks"; second edition, 2003.

(ddd) AAMA 2604-05; "Voluntary Specification, Performance Requirements and Test Procedures for Superior Performing Organic Coatings on Aluminum Extrusions and Panels"; published 2005.

(eee) AAMA 2605-05; "Voluntary Specification, Performance Requirements and Test Procedures for Superior Performing Organic Coatings on Aluminum Extrusions and Panels"; published 2005.

(fff) ANSI B31-3; "Process Piping"; February 14, 2002.

(ggg) APHA method 2540D; contained in "Standard Methods for the Examination of Water and Wastewater"; 20th edition, 1998.

(hhh) APHA Method 5310D; contained in "Standard Methods for the Examination of Water and Wastewater"; 20th edition, 1998.

(iii) ASTM C581-03(2008)e1; "Standard Practice for Determining Chemical Resistance of Thermosetting Resins Used in Glass-Fiber-Reinforced Structures Intended for Liquid Service"; approved May 1, 2008.

(jjj) ASTM D97-05a; "Standard Test Method for Pour Point of Petroleum Products"; approved July 1, 2005.

(kkk) ASTM D244-04; "Standard Test Methods for Testing Emulsified Asphalt"; approved December 1, 2004.

(lll) ASTM D322-97(2002)e1; "Standard Test Method for Gasoline Diluent in Used Gasoline Engine Oils by Distillation"; approved December 10, 2002.

(mmm) ASTM D323-99a; "Standard Test Method for Vapor Pressure of Petroleum Products (Reid Method)"; approved April 10, 1999.

(nnn) ASTM D523-89(1999); "Standard Test Method for Specular Gloss"; approved May 10, 1999.

(ooo) ASTM D1475-98; "Standard test method for density of liquid coatings, inks, and related products"; approved October 10, 1998, reapproved December 1, 2003.

(ppp) ASTM D1946-90(2000); "Standard practice for analysis of reformed gas by gas chromatography"; approved 1990, reapproved, January 1, 2000.

(qqq) ASTM D1979-97; "Standard Test Method for Free Formaldehyde Content of Amino Resins"; approved November 10, 1997.

(rrr) ASTM D2306-00; "Standard Test Method for C8 Aromatic Hydrocarbon Analysis by Gas Chromatography"; approved June 10, 2000.

(sss) ASTM D2369-04; "Standard test method for volatile content of coatings"; approved March 1, 2004.

(ttt) ASTM D2879-97(2007); "Standard Test Method for Vapor Pressure-Temperature Relationship and Initial Decomposition Temperature of Liquids by Isoteniscope"; approved April 10, 1997, reapproved May 1, 2007.

(uuu) ASTM D2996-01(2007)e1; "Standard Specification for Filament-Wound "Fiberglass" (Glass-Fiber-Reinforced Thermosetting-Resin) Pipe"; approved March 1, 2007.

(vvv) ASTM D2997-01(2007)e1; "Standard Specification for Centrifugally Cast "Fiberglass" (Glass-Fiber-Reinforced Thermosetting-Resin) Pipe"; approved March 15, 2007.

(www) ASTM D3203-05; "Standard Test Methods for Percent Air Voids in Compacted Dense and Open Bituminous Paving Mixtures"; approved June 1, 2005.

(xxx) ASTM D3262-06; "Standard Specification for "Fiberglass" (Glass-Fiber-Reinforced Thermosetting-Resin) Sewer Pipe"; approved November 1, 2006.

(yyy) ASTM D3299-10; "Standard Specification for Filament-Wound Glass-Fiber-Reinforced Thermoset Resin Corrosion-Resistant Tanks"; April 1, 2010.

(zzz) ASTM D3517-06; "Standard Specification for "Fiberglass" (Glass-Fiber-Reinforced Thermosetting-Resin) Pressure Pipe"; November 1, 2006.

(aaaa) ASTM D3754-06; "Standard Specification for "Fiberglass" (Glass-Fiber-Reinforced Thermosetting-Resin) Sewer and Industrial Pressure Pipe"; Approved November 1, 2006.

(bbbb) ASTM D3792-05; "Standard Test Method for Water Content of Coatings by Direct Injection Into a Gas Chromatograph"; approved January 1, 2005.

(cccc) ASTM D3839-08; "Standard Guide for Underground Installation of "Fiberglass" (Glass-FiberReinforced Thermosetting-Resin) Pipe"; approved April 1, 2008.

(dddd) ASTM D3840-01(2005); "Standard Specification for "Fiberglass" (Glass-Fiber-Reinforced Thermosetting-Resin) Pipe Fittings for Nonpressure Applications"; approved November 1, 2005.

(eeee) ASTM D3912-80; "Standard Test Method for Chemical Resistance of Coatings Used in Light-Water Nuclear Power Plants"; approved 1980, reapproved January 1, 2001.

(ffff) ASTM D3982-08; "Standard Specification for Contact Molded "Fiberglass" (Glass Fiber Reinforced Thermosetting Resin) Ducts"; approved November 1, 2008.

(gggg) ASTM D4024-05; "Standard Specification for Machine Made "Fiberglass" (Glass-Fiber-Reinforced Thermosetting Resin) Flanges"; approved March 1, 2005.

(hhhh) ASTM D4082-89; "Standard Test Method for Effects of Gamma Radiation on Coatings for Use in Light-Water Nuclear Power Plants"; approved 1989, reapproved January 10, 2002.

(iiii) ASTM D4097-01(2010); "Standard Specification for Contact-Molded Glass-Fiber-Reinforced Thermoset Resin Corrosion-Resistant Tanks"; approved 2001, reapproved January 1, 2010.

(jjjj) ASTM D4161-01(2005); "Standard Specification for "Fiberglass" (Glass-Fiber-Reinforced Thermosetting-Resin) Pipe Joints Using Flexible Elastomeric Seals"; approved 2001, reapproved November 1, 2005.

(kkkk) ASTM D4256-89(1994)e1; "Test Method for Determination of the Decontaminability of Coatings Used in Light-Water Nuclear Power Plants"; approved 1994.

(llll) ASTM D4457-02(2008); "Standard Test Method for Determination of Dichloromethane and 1,1,1-Trichloroethane in Paints and Coatings by Direct Injection into a Gas Chromatograph"; approved February 1, 2008.

(mmmm) ASTM D4953-99a; "Standard Specification for Low Silicate Ethylene Glycol Base Engine Coolant for Heavy Duty Engines Requiring a Pre-Charge of Supplemental Coolant Additive (SCA)"; approved April 10, 1999.

(nnnn) ASTM D5190-01; "Standard Test Method for Vapor Pressure of Petroleum Products (Automatic Method)"; approved January 10, 1999.

(oooo) ASTM D5191-04a; "Standard Test Method for Vapor Pressure of Petroleum Products (Mini Method)"; approved October 4, 2004.

(pppp) ASTM D5364-08e1; "Standard Guide for Design, Fabrication, and Erection of Fiberglass Reinforced Plastic Chimney Liners with Coal-Fired Units"; approved November 1, 2008.

(qqqq) ASTM D5798-99(2004); "Standard Specification for Fuel Ethanol (Ed75-Ed85) for Automotive Spark-Ignition Engines"; approved July 1, 2004.

(rrrr) ASTM D5910-05; "Standard Test Method for Determination of Free Formaldehyde in Emulsion Polymers by Liquid Chromatography"; approved October 1, 2005.

(ssss) ASTM D6191-97(2003); "Standard Test Method for Measurement of Evolved Formaldehyde from Water Reducible Air-Dry Coatings"; approved March 10, 2003.

(tttt) ASTM D6897-03a; "Standard Test Method for Vapor Pressure of Liquefied Petroleum Gases (LPG) (Expansion Method)"; approved December 1, 2003.

(uuuu) ASTM D6902-04e1; "Standard Test Method for Laboratory Measurement of Formaldehyde Evolved During the Curing of Melamine-Formaldehyde-Based Coatings"; approved July 1, 2004.

(vvvv) ASTM E84-10; "Standard Test Method for Surface Burning Characteristics of Building Materials"; approved January 1, 2010.

(wwww) ASTM E162-09; "Standard Test Method for Surface Flammability of Materials Using a Radiant Heat Energy Source"; approved August 1, 2009.

(xxxx) ASTM E168-99(2004); "Standard practices for general techniques of infrared quantitative analysis"; approved February 1, 2004.

(yyyy) ASTM E169-04; "Standard practices for general techniques of ultraviolet-visible quantitative analysis"; approved November 1, 2004.

(zzzz) ASTM E260-96(2001); "Standard practice for packed column gas chromatography"; approved January 1, 2001.

(aaaaa) ASTM E662-09; "Standard Test Method for Specific Optical Density of Smoke Generated by Solid Materials"; approved March 1, 2009.

(bbbbb) ASTM F852-99e1; "Standard Specification for Portable Gasoline Containers for Consumer Use"; approved July 15, 1999.

(ccccc) ASTM F976-02; Standard Specification for Portable Kerosene Containers for Consumer Use"; approved May 10, 2002.

(ddddd) ASTM F1216-09; "Standard Practice for Rehabilitation of Existing Pipelines and Conduits by the Inversion and Curing of a Resin-Impregnated Tube"; approved March 1, 2009.

(eeeee) ASTM F2234-03; "Standard Specification for Portable Gasoline and Kerosine Spill Resistant Fueling Systems for Consumer Use"; approved July 10, 2003.

(fffff) California Code of Regulations Title 13, Division 3, Chapter 9, Article 6; "Portable Containers and Spouts"; effective October 11, 2006.

(ggggg) Clean Air Act; contained in 42 USC 7401 to 7671q; "The Public Health and Welfare-Air Pollution Prevention and Control"; published January 5, 2009 in Supplement II of the 2006 edition of the United States Code.

(hhhhh) "Control of Volatile Organic Compound Emissions from Reactor Processes and Distillation Operations Processes in the Synthetic Organic Chemical Manufacturing Industry"; EPA-450-/4-91-031; August 1993.

(iiiii) "Early Reduction Program;" 57 Federal Register 61970; December 29, 1992.

(jjjjj) Federal Insecticide, Fungicide, and Rodenticide Act; contained in 7 USC 136 to 136y; "Environmental Pesticide Control;" published January 8, 2008 in Supplement I of the 2006 edition of the United States Code.

(kkkkk) "Federal Motor Vehicle Safety Standards;" contained in 49 CFR Part 571; as published in the July 1, 2010 Code of Federal Regulations.

(lllll) "Guidance for Estimating Capital and Annual Costs of Air Pollution Systems;" Ohio environmental protection agency engineering guide 46; March 1983.

(mmmmm) "Guidelines for determining capture efficiency;" USEPA office of air and radiation, policy and guidance; February 7, 1995.

(nnnnn) "Methods for the Chemical Analysis of Water and Wastes;" EPA report number: EPA/821/C-99/004; published 5/01/99.

(ooooo) NFPA 30B; "Code for the Manufacture and Storage of Aerosol Products"; 2002 edition.

(ppppp) "Protocol for Determining the Daily Volatile Organic Compound Emission Rate of Automobile and Light-Duty Truck Topcoat Operations"; EPA-453/R-08-002 September 2008.

(qqqqq) "Regulatory Guide 1.54 - Service Level I, II and III Protective Coatings Applied to Nuclear Plants"; issued July, 2000.

(rrrrr) South coast air quality management district (SCAQMD) method 321-91; "Determination of percent monomer in polyester resins"; approved June 1, 1991, revised April, 1996.

(sssss) South coast air quality management district (SCAQMD) method 316A; "Determination of volatile organic compounds (VOC) in materials used for pipes and fittings"; approved September 9, 1992, revised October 1996.

(ttttt) Section 182 of the Clean Air Act; contained in 42 USC 7511a; "Plan submissions and requirements"; published January 5, 2009 in supplement II of the 2006 edition of the United States Code.

(uuuuu) Section 193 of the Clean Air Act; contained in 42 USC 7515; "General savings clause"; published January 5, 2009 in supplement II of the 2006 edition of the United States Code.

(vvvvv) "Standard Industrial Classification Manual." United States Office of Management and Budget, last amended 1988.

(wwwww) "Standard Methods for the Examination of Water and Wastewater;" 20th edition, published 1998.

(xxxxx) SW-846; "Test Methods for Evaluating Solid Waste, Physical/Chemical Methods"; last updated December 1996.

(yyyyy) SW-846 method 3810; "Headspace"; revision 0, September 1986.

(zzzzz) SW-846 method 5030B; "Purge-and-trap for Aqueous Samples"; revision 2, December 1996.

(aaaaaa) SW-846 method 8015B; "Nonhalogenated Organics Using GC/FID"; revision 2, December 1996.

(bbbbbb) SW-846 method 8021B; "Aromatic and Halogenated Volatiles by Gas Chromatography Using Photoionization and/or Electrolytic Conductivity Detectors"; revision 2, December 1996.

(cccccc) SW-846 method 8260B; "Volatile Organic Compounds by Gas Chromatography/Mass Spectrometry (GC/MS)"; revision 2, December 1996.

(dddddd) SW-846 method 9060; "Total Organic Carbon"; revision 0, September 1986.

(eeeeee) USEPA-approved alternative test method ALT-020; "Negative Pressure Enclosure Qualitative Test Method for Bakery Ovens"; posted November 15, 2000.

(ffffff) USEPA conditional test method CTM-042; "Use of Flame Ionization Detector-Methane Cutter Analysis Systems for VOC Compliance Testing of Bakeries"; revised August 18, 2004; posted September 3, 2004.

(gggggg) USEPA method 1; contained in 40 CFR Part 60, Appendix A; "Sample and velocity traverses for stationary sources"; as published in the July 1, 2010 Code of Federal Regulations.

(hhhhhh) USEPA method 1A; contained in 40 CFR Part 60, Appendix A; "Sample and velocity traverses for stationary sources with small stacks or ducts"; as published in the July 1, 2010 Code of Federal Regulations.

(iiiiii) USEPA method 2; contained in 40 CFR Part 60, Appendix A; "Determination of stack gas velocity and volumetric flow rate (Type S pitot tube)"; as published in the July 1, 2010 Code of Federal Regulations.

(jjjjjj) USEPA method 2A; contained in 40 CFR Part 60, Appendix A; "Direct measurement of gas volume through pipes and small ducts"; as published in the July 1, 2010 Code of Federal Regulations.

(kkkkkk) USEPA method 2B; contained in 40 CFR Part 60, Appendix A; "Determination of exhaust gas volume flow rate from gasoline vapor incinerators"; as published in the July 1, 2010 Code of Federal Regulations.

(llllll) USEPA method 2C; contained in 40 CFR Part 60, Appendix A; "Determination of gas velocity and volumetric flow rate in small stacks or ducts (standard pilot tube)"; as published in the July 1, 2010 Code of Federal Regulations.

(mmmmmm) USEPA method 2D; contained in 40 CFR Part 60, Appendix A; "Measurement of gas volume flow rates in small pipes and ducts"; as published in the July 1, 2010 Code of Federal Regulations.

(nnnnnn) USEPA method 3; contained in 40 CFR Part 60, Appendix A; "Gas analysis for the determination of dry molecular weight"; as published in the July 1, 2010 Code of Federal Regulations.

(oooooo) USEPA method 3B; contained in 40 CFR Part 60, Appendix A; "Gas analysis for the determination of emission rate correction factor or excess air"; as published in the July 1, 2010 Code of Federal Regulations.

(pppppp) USEPA method 4; contained in 40 CFR Part 60, Appendix A; "Determination of moisture content in stack gases"; as published in the July 1, 2010 Code of Federal Regulations.

(qqqqqq) USEPA method 18; contained in 40 CFR Part 60, Appendix A; "Measurement of Gaseous Organic Compound Emissions By Gas Chromatograph"; as published in the July 1, 2010 Code of Federal Regulations.

(rrrrrr) USEPA method 21; contained in 40 CFR Part 60, Appendix A; "Determination of volatile organic compound leaks"; as published in the July 1, 2010 Code of Federal Regulations.

(ssssss) USEPA method 22; contained in 40 CFR Part 60, Appendix A; "Visual determination of fugitive emissions from material sources and smoke

emissions from flares"; as published in the July 1, 2010 Code of Federal Regulations.

(tttttt) USEPA method 24; contained in 40 CFR Part 60, Appendix A; "Determination of volatile matter content, water content, density, volume solids, and weight solids of surface coatings"; as published in the July 1, 2010 Code of Federal Regulations.

(uuuuuu) USEPA method 24A; contained in 40 CFR Part 60, Appendix A; "Determination of volatile matter content and density of printing inks and related coatings"; as published in the July 1, 2010 Code of Federal Regulations.

(vvvvvv) USEPA method 25; contained in 40 CFR Part 60, Appendix A; "Determination of total gaseous nonmethane organic emissions as carbon"; as published in the July 1, 2010 Code of Federal Regulations.

(wwwwww) USEPA method 25A; contained in 40 CFR Part 60, Appendix A; "Determination of volatile matter content and density of printing inks and related coatings"; as published in the July 1, 2010 Code of Federal Regulations.

(xxxxxx) USEPA method 25B; contained in 40 CFR Part 60, Appendix A; "Determination of total gaseous organic concentration using a nondispersive infrared analyzer"; as published in the July 1, 2010 Code of Federal Regulations.

(yyyyyy) USEPA method 25D; contained in 40 CFR Part 60, Appendix A; "Determination of the Volatile Organic Concentration of Waste Samples"; as published in the July 1, 2010 Code of Federal Regulations.

(zzzzzz) USEPA method 26; contained in 40 CFR Part 60, Appendix A; "Determination of Hydrogen Chloride Emissions From Stationary Sources"; as published in the July 1, 2010 Code of Federal Regulations.

(aaaaaaa) USEPA method 26A; contained in 40 CFR Part 60, Appendix A; "Determination of hydrogen halide and halogen emissions from stationary sources-isokinetic method"; as published in the July 1, 2010 Code of Federal Regulations.

(bbbbbbb) USEPA method 27; contained in 40 CFR Part 60, Appendix A; "Determination of vapor tightness of gasoline delivery tank using pressure-vacuum test"; as published in the July 1, 2010 Code of Federal Regulations.

(ccccccc) USEPA method 160.2 contained in "Methods for Chemical Analysis of Water and Wastes"; contained in "Methods and Guidance for Analysis of Water"; EPA Report Number: EPA/821/C-99/004; published May 1, 1999.

(ddddddd) USEPA method 204; contained in 40 CFR Part 51, Appendix M; "Criteria for and Verification of a Permanent or Temporary Total Enclosure"; 59 FR 16715, Apr. 7, 1994.

(eeeeeee) USEPA method 204A; contained in 40 CFR Part 51, Appendix M; "Volatile organic compounds content in liquid input stream"; 55 FR 14249, Apr. 17, 1990; 55 FR 24687, June 18, 1990, as amended at 55 FR 37606, Sept. 12, 1990; 56 FR 6278, Feb. 15, 1991; 56 FR 65435, Dec. 17, 1991; 60 FR 28054, May 30, 1995; 62 FR 32502, June 16, 1997.

(fffffff) USEPA method 204B; contained in 40 CFR Part 51, Appendix M; "Volatile organic compounds emissions in captured stream"; 55 FR 14249, Apr. 17, 1990; 55 FR 24687, June 18, 1990, as amended at 55 FR 37606, Sept. 12, 1990; 56 FR 6278, Feb. 15, 1991; 56 FR 65435, Dec. 17, 1991; 60 FR 28054, May 30, 1995; 62 FR 32502, June 16, 1997.

(gggggggg) USEPA method 204C; contained in 40 CFR Part 51, Appendix M; " Volatile organic compounds emissions in captured stream (dilution technique)"; 55 FR 14249, Apr. 17, 1990; 55 FR 24687, June 18, 1990, as amended at 55 FR 37606, Sept. 12, 1990; 56 FR 6278, Feb. 15, 1991; 56 FR 65435, Dec. 17, 1991; 60 FR 28054, May 30, 1995; 62 FR 32502, June 16, 1997.

(hhhhhhh) USEPA method 204D; contained in 40 CFR Part 51, Appendix M; " Volatile organic compounds emissions in uncaptured stream from temporary total enclosure"; 55 FR 14249, Apr. 17, 1990; 55 FR 24687, June 18, 1990, as amended at 55 FR 37606, Sept. 12, 1990; 56 FR 6278, Feb. 15, 1991; 56 FR 65435, Dec. 17, 1991; 60 FR 28054, May 30, 1995; 62 FR 32502, June 16, 1997.

(iiiiiii) USEPA method 204E; contained in 40 CFR Part 51, Appendix M; " Volatile organic compounds emissions in uncaptured stream from building enclosure"; 55 FR 14249, Apr. 17, 1990; 55 FR 24687, June 18, 1990, as amended at 55 FR 37606, Sept. 12, 1990; 56 FR 6278, Feb. 15, 1991; 56 FR 65435, Dec. 17, 1991; 60 FR 28054, May 30, 1995; 62 FR 32502, June 16, 1997.

(jjjjjjj) USEPA method 204F; contained in 40 CFR Part 51, Appendix M; " Volatile organic compounds content in liquid input stream (distillation approach)"; 55 FR 14249, Apr. 17, 1990; 55 FR 24687, June 18, 1990, as amended at 55 FR 37606, Sept. 12, 1990; 56 FR 6278, Feb. 15, 1991; 56 FR 65435, Dec. 17, 1991; 60 FR 28054, May 30, 1995; 62 FR 32502, June 16, 1997.

(kkkkkkk) USEPA method 301; contained in 40 CFR Part 63, Appendix A; "Field Validation of Pollutant Measurement Methods from Various Waste Media"; as published in the July 1, 2010 Code of Federal Regulations.

(lllllll) USEPA method 305; contained in 40 CFR Part 63, Appendix A; "Measurement of Emission Potential of Individual Volatile Organic Compounds in Waste"; as published in the July 1, 2010 Code of Federal Regulations.

(mmmmmmm) USEPA method 602; contained in 40 CFR Part 136, Appendix A; "Purgeable Aromatics"; 49 FR 43261, Oct. 26, 1984; 50 FR 692, 695, Jan. 4, 1985, as amended at 51 FR 23702, June 30, 1986; 62 FR 48405, Sept. 15, 1997; 65 FR 3044, Jan. 19, 2000; 65 FR 81295, 81298, Dec. 22, 2000.

(nnnnnnn) USEPA method 624; contained in 40 CFR Part 136, Appendix A; "Purgeables"; 49 FR 43261, Oct. 26, 1984; 50 FR 692, 695, Jan. 4, 1985, as amended at 51 FR 23702, June 30, 1986; 62 FR 48405, Sept. 15, 1997; 65 FR 3044, Jan. 19, 2000; 65 FR 81295, 81298, Dec. 22, 2000.

(ooooooo) USEPA method 625; contained in 40 CFR Part 136, Appendix A; "Base/Neutrals and Acids"; 49 FR 43261, Oct. 26, 1984; 50 FR 692, 695, Jan. 4, 1985, as amended at 51 FR 23702, June 30, 1986; 62 FR 48405, Sept. 15, 1997; 65 FR 3044, Jan. 19, 2000; 65 FR 81295, 81298, Dec. 22, 2000.

(pppppppp) USEPA method 1624; contained in 40 CFR Part 136, Appendix A; "Volatile Organic Compounds by Isotope Dilution GC/MS"; 49 FR 43261, Oct. 26, 1984; 50 FR 692, 695, Jan. 4, 1985, as amended at 51 FR 23702, June 30, 1986; 62 FR 48405, Sept. 15, 1997; 65 FR 3044, Jan. 19, 2000; 65 FR 81295, 81298, Dec. 22, 2000.

(qqqqqqq) USEPA method 1625; contained in 40 CFR Part 136, Appendix A; "Semivolatile Organic Compounds by Isotope Dilution GC/MS"; 49 FR 43261, Oct. 26, 1984; 50 FR 692, 695, Jan. 4, 1985, as amended at 51 FR 23702, June 30, 1986; 62 FR 48405, Sept. 15, 1997; 65 FR 3044, Jan. 19, 2000; 65 FR 81295, 81298, Dec. 22, 2000.

(rrrrrrr) WATER9; version 2.0.0, August 16, 2001.

Effective: 05/12/2011

R.C. 119.032 review dates: 08/25/2013

CERTIFIED ELECTRONICALLY
Certification

05/02/2011
Date

Promulgated Under: 119.03
Statutory Authority: 3704.03(E)
Rule Amplifies: 3704.03(A), 3704.03(E)
Prior Effective Dates: 2/15/72, 10/19/79, 3/27/81, 6/21/82, 1/24/83, 5/9/86, 5/25/88, 8/22/90, 6/14/91, 3/31/1993, 11/5/02, 5/27/05, 2/10/2006. 8/25/08, 4/2/09

3745-21-02 **Ambient air quality standards and guidelines.**

This rule was rescinded as of 4/18/09.

The rule language was moved to OAC Rule 3745-25-02.

3745-21-03 **Methods of ambient air quality measurement.**

[Comment: For dates of non-regulatory government publications, publications of recognized organizations and associations, federal rules, and federal statutory provisions referenced in this rule, see the last paragraph of rule 3745-21-01 of the Administrative Code titled "Incorporation by reference."]

(A) For purposes of ascertaining, defining, and measuring ambient air quality, air contaminants shall be measured by the method or methods stated in paragraphs (B) to (C) of this rule or by such other methods as may be approved by the director.

(B) Concentrations of carbon monoxide in ambient air shall be determined as follows:

(1) Hourly integrated concentrations of carbon monoxide shall be determined through the use of a continuous sampling and recording device as described in 40 CFR part 50, appendix C.

(2) Eight hour concentrations shall be determined by arithmetically averaging the hourly integrated data, obtained as described in paragraph (B)(1) of this rule, for any eight-hour period. An eight-hour average shall be considered valid if at least seventy-five per cent of the hourly averages for the eight-hour period are available. In the event that only six (or seven) hourly averages are available, the eight-hour average shall be computed on the basis of the hours available using six (or seven) as the divisor.

(C) Concentrations of ozone shall be determined through the use of a continuous sampling and recording device as described in 40 CFR part 50, appendix D.

Effective: 08/25/2008

R.C. 119.032 review dates: 02/21/2008 and 08/25/2013

CERTIFIED ELECTRONICALLY
Certification

08/15/2008
Date

Promulgated Under: 119.03
Statutory Authority: 3704.03(E)
Rule Amplifies: 3704.03(E), 3704.03(A)
Prior Effective Dates: 9/15/1970, 12/31/1970, 10/19/1979, 10/31/1996, 11/5/2002

3745-21-04 **Compliance time schedules.**

[Comment: For dates and availability of non-regulatory government publications, publications of recognized organizations and associations, federal rules, and federal statutory provisions referenced in this rule, see paragraph (JJ) of rule 3745-21-01 of the Administrative Code titled "Reference to materials."]

(A) .[Reserved]

(B) Certification and permit application requirements.

(1) Except as otherwise provided in paragraphs (B)(2), (B)(3), (B)(4), and (B)(7) of this rule, by no later than December 1, 1979 for any air contaminant source subject to paragraphs (C) to (S) of rule 3745-21-09 of the Administrative Code, by no later than April l, 1981 for any air contaminant source subject to paragraphs (T) to (AA) of rule 3745-21-09 of the Administrative Code, by no later than June 1, 1986 for any air contaminant source subject to paragraphs (BB) to (EE) of rule 3745-21-09 of the Administrative Code, by no later than June 1, 1988 for any air contaminant source subject to paragraphs (FF) to (PP) of rule 3745-21-09 of the Administrative Code, and by no later than May 1, 1993 for any air contaminant source subject to paragraphs (QQ) to (DDD) of rule 3745-21-09 of the Administrative Code, any owner or operator of said air contaminant source(s) shall either:

(a) Certify in writing to the director that such source is in compliance with all requirements of rule 3745-21-09 of the Administrative Code. Such certification shall include: equipment description, Ohio environmental protection agency permit application number (if assigned), and all necessary data (consistent with the appropriate permit application appendices or emission activity category forms) and calculations which confirm the compliance status. The certification shall also include an application for a permit authorizing operation of such source in accordance with rule 3745-21-09 of the Administrative Code if such source does not possess an effective permit, or, if applicable;

(b) Submit an application for an operating permit or an application for a modification to an operating permit in accordance with Chapter 3745-77 of the Administrative Code, for sources subject to the Title V program, or in accordance with Chapter 3745-31 of the Administrative Code, for sources not subject to the Title V program. Such application shall include a compliance program which will bring the source into compliance with all the requirements of rule 3745-21-09 of the Administrative Code as expeditiously as practicable but in no event later than the dates specified in paragraph (C) of this rule, and shall identify all reasonable interim control measures.

[Comment: Applications requiring submittal prior to June 30, 2008, for sources not subject to the Title V program, were to be submitted in accordance with Chapter 3745-35 of the Administrative Code.]

(2) The certification and/or operating permit application required by paragraph (B)(1) of this rule shall not apply to any air contaminant sources subject exclusively to paragraph (N) or (V) of rule 3745-21-09 of the Administrative Code (pertaining to cutback asphalts and gasoline tank trucks).

(3) For any air contaminant source subject to:

(a) Paragraphs (C)(3)(c), (C)(4)(b), (C)(5)(b), (C)(6)(b), (C)(8)(b), (C)(8)(c), (C)(9)(b), (C)(10)(b), (C)(19)(b) to (C)(19(d), (C)(28)(b), (C)(28)(c), (C)(65), and (C)(66) of this rule, a certification and/or operating permit application shall be submitted in accordance with paragraphs (B)(1)(a) and (B)(1)(b) of this rule by no later than May 1, 1993.

(b) Paragraphs (C)(5)(d), (C)(8)(e), and (C)(10)(d) of this rule, a certification and/or operating permit application shall be submitted in accordance with paragraphs (B)(1)(a) and (B)(1)(b) of this rule by no later than July 31, 2009.

(4) For any air contaminant source subject to paragraphs (C)(3)(d) and (C)(28)(d) of this rule, a certification and/or operating permit application shall be submitted in accordance with paragraphs (B)(1)(a) and (B)(1)(b) of this rule by no later than March 1, 1995.

(5) In demonstrating compliance pursuant to paragraph (B)(1)(a) of this rule, the owner or operator of a source must utilize the test methods and procedures specified in rule 3745-21-10 of the Administrative Code. In addition, for any source that is located within one of the counties specified in paragraph (A) of rule 3745-21-09 of the Administrative Code, employs add-on controls to comply with the requirements of rule 3745-21-09 of the Administrative Code, and has not been tested since January 1, 1991, the owner or operator of such source shall conduct emission tests in accordance with the methods specified in rule 3745-21-10 of the Administrative Code to demonstrate compliance with the requirements of rule 3745-21-09 of the Administrative Code. The emission tests shall be conducted by January 17, 1996. For the purpose of complying with the emission test requirement specified in this paragraph, the Ohio environmental protection agency may accept an emission test conducted prior to January 1, 1991, if the owner or operator provides information and data to the Ohio environmental protection agency which demonstrate that the test was witnessed by the Ohio environmental protection agency or its delegated agent, that an approved USEPA emission test method was employed, and that the operation of the source was consistent with the current source operating conditions and

operating capacity. For each coating employed in any coating line that is located within one of the counties specified in paragraph (A) of rule 3745-21-09 of the Administrative Code and is subject to the requirements of rule 3745-21-09 of the Administrative Code, the owner or operator shall demonstrate compliance with any applicable VOC content limitation specified in rule 3745-21-09 of the Administrative Code using USEPA method 24 (for coatings) or USEPA method 24A (for flexographic and rotogravure printing inks and related coatings). If any such coating has not been analyzed using USEPA method 24 or USEPA 24A since January 1, 1991, the owner or operator shall either conduct a USEPA method 24 or USEPA method 24A analysis of the coating or obtain a USEPA method 24 or USEPA method 24A analysis of the coating from the coating supplier by January 17, 1996. If, pursuant to section 11.4 of USEPA method 24, as contained in 40 CFR Part 60 Appendix A, an owner or operator determines that USEPA method 24 or USEPA method 24A cannot be used for a particular coating or ink, the owner or operator shall so notify the administrator of the USEPA and shall use formulation data for that coating or ink to demonstrate compliance until the USEPA provides alternative analytical procedures or alternative precision statements for USEPA method 24 or USEPA method 24A.

(6) The owner or operator of a source that is subject to the requirements of rule 3745-21-09 of the Administrative Code shall notify the director in writing at least thirty days before any impending change in the method of complying with said requirements.

(7) For any air contaminant source subject to paragraph (C)(28)(e) of this rule a compliance certification or compliance program, along with an operating permit application, if appropriate, shall be submitted in accordance with paragraphs (B)(1)(a) and (B)(1)(b) of this rule by no later than two months after the effective date of this rule. For any air contaminant source subject to paragraph (C)(28)(e) of this rule and located at a facility subject to Chapter 3745-77 of the Administrative Code, the owner or operator shall only submit a compliance certification or a compliance program, but no operating permit application, in accordance with paragraphs (B)(1)(a) and (B)(1)(b) of this rule by no later than August 15, 1999.

(C) Compliance time schedules.

(1) No owner or operator may cause, permit, or allow the operation or other use of any air contaminant source in violation of the limitations specified in rule 3745-21-07 or 3745-21-08 of the Administrative Code beyond April 15, 1977.

(2) Except as otherwise provided in paragraphs (C)(21) to (C)(26) and (C)(35) of this rule, any owner or operator of an automobile or light-duty truck assembly plant which is subject to the requirements of paragraph (C) of rule 3745-21-09 of the Administrative Code shall achieve compliance with said requirements by December 1, 1982.

(3) Can coating lines.

(a) Except as provided in paragraphs (C)(3)(b), (C)(3)(c), and (C)(3)(d) of this rule, any owner or operator of a can coating line which is subject to the requirements of paragraph (D) of rule 3745-21-09 of the Administrative Code shall achieve compliance with said requirements by April 1, 1982.

(b) (Reserved)

(c) Any owner or operator of a can coating line which employs a control system shall achieve compliance with either the control requirements specified in paragraph (B)(6) of rule 3745-21-09 of the Administrative Code or the VOC limitation which is contained in paragraph (D) of rule 3745-21-09 of the Administrative Code and expressed in terms of pounds of VOC per gallon of solids by April 1, 1995.

(d) Any owner or operator of an end sealing compound coating line used for food can ends shall achieve compliance with the requirements of paragraphs (D)(1)(e) and (D)(2)(e) of rule 3745-21-09 of the Administrative Code no later than January 17, 1996. Any owner or operator of a two-piece or three-piece can coating operation which has an end sealing compound coating line and which is subject to the alternative daily emission limitation of paragraph (D)(3) of rule 3745-21-09 of the Administrative Code shall achieve compliance with the requirement of paragraph (D) of rule 3745-21-09 of the Administrative Code no later than January 17, 1996.

(4) Coil coating lines.

(a) Except as otherwise provided in paragraphs (C)(4)(b) and (C)(20) of this rule, any owner or operator of a coil coating line which is subject to the requirements of paragraph (E) of rule 3745-21-09 of the Administrative Code shall achieve compliance with said requirements by April 1, 1982.

(b) Any owner or operator of a coil coating line which employs a control system shall achieve compliance with either the control requirements specified in paragraph (B)(6) of rule 3745-21-09 of the Administrative Code or the VOC limitation which is contained in paragraph (E) of rule 3745-21-09 of the Administrative Code and expressed in terms of pounds of VOC per gallon of solids by April 1, 1995.

(5) Paper coating lines.

(a) Except as otherwise provided in paragraph (C)(5)(b) of this rule, any owner or operator of a paper coating line which is subject to the requirements of

paragraph (F) of rule 3745-21-09 of the Administrative Code shall achieve compliance with said requirements by April 1, 1982.

(b) Any owner or operator of a paper coating line which employs a control system shall achieve compliance with either the control requirements specified in paragraph (B)(6) of rule 3745-21-09 of the Administrative Code or the VOC limitation which is contained in paragraph (F) of rule 3745-21-09 of the Administrative Code and expressed in terms of pounds of VOC per gallon of solids by April 1, 1995.

(c) Any owner or operator of a paper coating line which is subject to the requirements of paragraph (F)(2) of rule 3745-21-09 of the Administrative Code shall achieve compliance with said requirements by no later than April 2, 2010.

(d) Any owner or operator of a paper coating line which employs an add-on control system shall achieve compliance with the control requirements specified in paragraph (B)(7) of rule 3745-21-09 of the Administrative Code by no later than April 2, 2010.

(6) Fabric coating lines.

(a) Except as otherwise provided in paragraph (C)(6)(b) of this rule, any owner or operator of a fabric coating line which is subject to the requirements of paragraph (G) of rule 3745-21-09 of the Administrative Code shall achieve compliance with said requirements by April 1, 1982.

(b) Any owner or operator of a fabric coating line which employs control system shall achieve compliance with either the control requirements specified in paragraph (B)(6) of rule 3745-21-09 of the Administrative Code or the VOC limitation which is contained in paragraph (G) of rule 3745-21-09 of the Administrative Code and expressed in terms of pounds of VOC per gallon of solids by April 1, 1995.

(7) Any owner or operator of a vinyl coating line which is subject to the requirements of paragraph (H) of rule 3745-21-09 of the Administrative Code shall achieve compliance with said requirements by April 1, 1982.

(8) Metal furniture coating lines.

(a) Except as otherwise provided in paragraphs (C)(8)(b) and (C)(8)(c) of this rule, any owner or operator of a metal furniture coating line which is subject to the requirements of paragraph (I) of rule 3745-21-09 of the Administrative Code shall achieve compliance with said requirements by April 1, 1982.

(b) Any owner or operator of a metal furniture coating line which employs a control system shall achieve compliance with either the control requirements specified in paragraph (B)(6) of rule 3745-21-09 of the Administrative Code or the VOC limitation which is contained in paragraph (I) of rule 3745-21-09 of the Administrative Code and expressed in terms of pounds of VOC per gallon of solids by April 1, 1995.

(c) Any owner or operator of a metal furniture coating line which, prior to March 31, 1993, was exempt from the requirements of paragraph (I) of rule 3745-21-09 of the Administrative Code, but is no longer exempt due to the change in the exemption criterion specified in paragraph (I)(3)(a) of rule 3745-21-09 of the Administrative Code, shall achieve compliance with the requirements of paragraph (I) of rule 3745-21-09 of the Administrative Code by April 1, 1995.

(d) Any owner or operator of a metal furniture coating line which is subject to the requirements of paragraph (I)(4) of rule 3745-21-09 of the Administrative Code shall achieve compliance with said requirements by no later than April 2, 2010.

(e) Any owner or operator of a metal furniture coating line which employs an add-on control system shall achieve compliance with either the control requirements specified in paragraph (B)(7) of rule 3745-21-09 of the Administrative Code or the VOC limitation specified in the table of paragraph (I)(4) of rule 3745-21-09 of the Administrative Code and expressed in terms of pounds of VOC per gallon of deposited solids by no later than April 2, 2010.

(9) Magnet wire coating lines.

(a) Except as otherwise provided in paragraph (C)(9)(b) of this rule, any owner or operator of a magnet wire coating line which is subject to the requirements of paragraph (J) of rule 3745-21-09 of the Administrative Code shall achieve compliance with said requirements by November 1, 1981.

(b) Any owner or operator of a magnet wire coating line which employs a control system shall achieve compliance with either the control requirements specified in paragraph (B)(6) of rule 3745-21-09 of the Administrative Code or the VOC limitation which is contained in paragraph (J) of rule 3745-21-09 of the Administrative Code and expressed in terms of pounds of VOC per gallon of solids by April 1, 1995.

(10) Large appliance coating lines.

(a) Except as otherwise provided in paragraph (C)(10)(b) of this rule, any owner or operator of a large appliance coating line which is subject to the requirements of paragraph (K) of rule 3745-21-09 of the Administrative Code shall achieve compliance with said requirements by April 1, 1982.

(b) Any owner or operator of a large appliance coating line which employs a control system shall achieve compliance with either the control requirements specified in paragraph (B)(6) of rule 3745-21-09 of the Administrative Code or the VOC limitation which is contained in paragraph (K) of rule 3745-21-09 of the Administrative Code and expressed in terms of pounds of VOC per gallon of solids by April 1, 1995.

(c) Any owner or operator of a large appliance coating line which is subject to the requirements of paragraph (K)(6) of rule 3745-21-09 of the Administrative Code shall achieve compliance with said requirements by no later than April 2, 2010.

(d) Any owner or operator of a large appliance coating line which employs a control system shall achieve compliance with either the control requirements specified in paragraph (B)(7) of rule 3745-21-09 of the Administrative Code or the VOC limitation which is contained in paragraph (K)(6) of rule 3745-21-09 of the Administrative Code and expressed in terms of pounds of VOC per gallon of deposited solids by no later than April 2, 2010.

(11) Any owner or operator of a fixed roof tank which is subject to the requirements of paragraph (L) of rule 3745-21-09 of the Administrative Code shall achieve compliance with said requirements by January 1, 1982.

(12) Any owner or operator of a refinery vacuum producing system which is subject to the requirements of paragraph (M)(1) of rule 3745-21-09 of the Administrative Code shall achieve compliance with said requirements by December 31, 1982.

(13) Any owner or operator of a refinery wastewater separator which is subject to the requirements of paragraph (M)(2) of rule 3745-21-09 of the Administrative Code shall achieve compliance with said requirements by January 1, 1981.

(14) Any owner or operator of a refinery process unit turnaround which is subject to the requirements of paragraph (M)(3) of rule 3745-21-09 of the Administrative Code shall achieve compliance with said requirements by December 31, 1982.

(15) The requirements of paragraph (N) of rule 3745-21-09 of the Administrative Code shall be complied with by the following deadlines:

(a) April 15, 1981 for the use or application of cutback asphalts in road construction and maintenance; and

(b) April 15, 1982 for the use or application of emulsified asphalts in road construction and maintenance.

(16) Solvent metal cleaning operations.

(a) Except as provided in paragraphs (C)(16)(b) to (C)(16)(d) of this rule, any owner or operator of a solvent metal cleaning operation which is subject to the requirements of paragraph (O) of rule 3745-21-09 of Administrative Code shall achieve compliance with said requirements by April 1, 1981.

(b) Any owner or operator of a solvent metal cleaning operation shall achieve compliance with the requirements of paragraphs (O)(2)(d), (O)(3)(d), and (O)(4)(e) of rule 3745-21-09 of the Administrative Code by July 17, 1995.

(c) Any owner or operator of a cold cleaning operation which is located in Butler, Clark, Clermont, Greene, Hamilton, Miami, Montgomery, or Warren county shall achieve compliance with the requirements of paragraph (O)(2)(e) of rule 3745-21-09 of the Administrative Code by May 1, 2006.

(d) Any owner or operator of a cold cleaning operation which is located in Ashtabula, Cuyahoga, Geauga, Lake, Lorain, Medina, Portage, or Summit county shall achieve compliance with the requirements of paragraph (O)(2)(e) of the Administrative Code by no later than April 2, 2010.

(17) Any owner or operator of a bulk gasoline plant which is subject to the requirements of paragraph (P) of rule 3745-21-09 of the Administrative Code shall achieve compliance with said requirements by July 1, 1981.

(18) Any owner or operator of a bulk gasoline terminal which is subject to the requirements of paragraph (Q) of rule 3745-21-09 of the Administrative Code shall achieve compliance with said requirements by July 1, 1981.

(19) Any owner or operator of a gasoline dispensing facility which is subject to the requirements of paragraph (R) of rule 3745-21-09 of the Administrative Code shall achieve compliance with said requirements no later than the deadlines in the following schedules:

(a) Except as otherwise provided in paragraphs (C)(19)(b) to (C)(19)(d) of this rule, for any gasoline dispensing facility which has an annual throughput equal to or greater than two hundred forty thousand gallons of gasoline by July 1, 1981.

(b) For any gasoline dispensing facility which is located in Ashtabula, Clark, Geauga, or Miami county: and for which construction commenced after November 15, 1990 and prior to March 31, 1993 by September 30, 1993.

(c) For any gasoline dispensing facility which is located in Ashtabula, Clark, Geauga, or Miami county and which dispenses at least one hundred thousand gallons of gasoline per month (based upon the average monthly sales of gasoline during the period from November 16, 1990 through November 15, 1992): by March 31, 1994.

(d) For any other gasoline dispensing facility which is located in Ashtabula, Clark, Geauga, or Miami county and which is not covered by paragraph (C)(19)(b) or (C)(19)(c) of this rule, or for any gasoline dispensing facility which is located in Delaware or Licking county and which has an annual throughput equal to or greater than one hundred twenty thousand gallons of gasoline, or for any gasoline dispensing facility which is located in Butler, Clermont, Cuyahoga, Franklin, Greene, Hamilton, Lake, Lorain, Lucas, Mahoning, Medina, Montgomery, Portage, Stark, Summit, Trumbull, Warren, or Wood county and which has an annual throughput equal to or greater than one hundred twenty thousand gallons of gasoline and less than two hundred forty thousand gallons of gasoline by March 31, 1995.

(20) "Alside, Inc." or any subsequent owner or operator of the "Alside, Inc." facility located at 3773 Akron road, North Hampton township, Summit county, Ohio shall achieve compliance with the requirements of paragraph (E) of rule 3745-21-09 of the Administrative Code by July 1, 1979, and paragraph (S) of rule 3745-21-09 of the Administrative Code by July 1, 1981.

(21) "General Motors Corporation" or any subsequent owner or operator of the "General Motors Corporation" automobile assembly plant located at 2200 Hallock Young road, Lordstown, Ohio shall achieve compliance with the requirements of paragraph (C)(1)(a)(i) of rule 3745-21-09 of the Administrative Code by December 31, 1982; and paragraphs (C)(1)(a)(ii), (C)(1)(c) and (C)(1)(d) of rule 3745-21-09 of the Administrative Code by December 31, 1985.

(22) "General Motors Corporation" or any subsequent owner or operator of the "General Motors Corporation" light-duty truck assembly plant located at 2200 Hallock Young road, Lordstown, Ohio shall achieve compliance with the requirements of paragraph (C)(1)(a)(i) of rule 3745-21-09 of the Administrative Code by December 31, 1982; and paragraphs (C)(1)(a)(ii), (C)(1)(c) and (C)(1)(d) of rule 3745-21-09 of the Administrative Code by December 31, 1984.

(23) "General Motors Corporation" or any subsequent owner or operator of the "General Motors Corporation" automobile assembly plant located at 4726 Smith road, Norwood, Ohio shall achieve compliance with the requirements of paragraphs (C)(1)(a)(i) and (C)(1)(c) of rule 3745-21-09 of the Administrative

Code by December 31, 1981; and paragraphs (C)(1)(a)(ii) and (C)(1)(d) of rule 3745-21-09 of the Administrative Code by December 31, 1982.

(24) "Ford Motor Company" or any subsequent owner or operator of the "Ford Motor Company" automobile and light-duty truck assembly plant located at 5401 Baumhart road, Lorain, Ohio shall achieve compliance with the requirements of paragraph (C)(1)(a)(i) of rule 3745-21-09 of the Administrative Code by December 31, 1982; and paragraphs (C)(1)(a)(ii), (C)(1)(b), (C)(1)(c) and (C)(1)(d) of rule 3745-21-09 of the Administrative Code by December 31, 1986.

(25) "Ford Motor Company" or any subsequent owner or operator of the "Ford Motor Company" light-duty truck assembly plant located at Miller and Walker roads, Avon Lake, Ohio shall achieve compliance with the requirements of paragraph (C)(1)(a)(i) of rule 3745-21-09 of the Administrative Code by December 31, 1982; and paragraphs (C)(1)(a)(ii), (C)(1)(c) and (C)(1)(d) of rule 3745-21-09 of the Administrative Code by December 31, 1986.

(26) "American Motors Jeep Corporation" or any subsequent owner or operator of the "American Motors Jeep Corporation" automobile assembly plant located at 940 North Cove Boulevard, Toledo, Ohio shall achieve compliance with the requirements of paragraphs (C)(1)(a) and (C)(1)(d) of rule 3745-21-09 of the Administrative Code by December 31, 1982; and paragraph (C)(1)(c) of rule 3745-21-09 of the Administrative Code by December 31, 1986.

(27) Any owner or operator of petroleum refinery equipment which is subject to the requirements of paragraph (T) of rule 3745-21-09 of the Administrative Code shall submit to the director a monitoring program by July 1, 1981, and the first quarterly monitoring report by October 15, 1981.

(28) Miscellaneous metal part or product coating lines.

(a) Except as otherwise provided in paragraphs (C)(28)(b), (C)(28)(c), and (C)(28)(d) of this rule, any owner or operator of a miscellaneous metal part or product coating line which is subject to the requirements of paragraph (U) of rule 3745-21-09 of the Administrative Code shall achieve compliance with said requirements by December 31, 1982.

(b) Any owner or operator of a miscellaneous metal part or product coating line which employs a control system shall achieve compliance with either the control requirements specified in paragraph (B)(6) of rule 3745-21-09 of the Administrative Code or the applicable VOC limitation which is contained in paragraph (U) of rule 3745-21-09 of the Administrative Code and expressed in terms of pounds of VOC per gallon of solids by April 1, 1995.

(c) Any owner or operator of a miscellaneous metal part or product coating line which is subject to the revised requirements of paragraph (U)(1)(e) of rule 3745-21-09 of the Administrative Code, pertaining to the interior coating of a steel pail or drum, shall achieve compliance with said requirements by April 1, 1995.

(d) Any owner or operator of a miscellaneous metal part or product coating line which is subject to the requirements of paragraph (U)(2)(e)(i) of rule 3745-21-09 of the Administrative Code or which was, prior to January 17, 1995, subject to the 4.8 pounds VOC per gallon of coating limitation for anticorrosion coatings contained in rule 3745-21-09 of the Administrative Code, shall achieve compliance by January 17, 1996.

(e) Any owner or operator of a miscellaneous metal part or product coating line which is located in Ashtabula, Butler, Clermont, Cuyahoga, Geauga, Hamilton, Lake, Lorain, Medina, Portage, Summit, or Warren county and which was, prior to the effective date of this rule, subject to the ten gallons per day exemption contained under paragraph (U)(2)(e) of rule 3745-21-09 of the Administrative Code shall achieve compliance with the requirements under paragraph (U)(1) or (U)(2)(e)(ii) of rule 3745-21-09 of the Administrative Code by June 15, 2000.

(29) Any owner or operator of a gasoline tank truck which is subject to the requirements of paragraph (V) of rule 3745-21-09 of the Administrative Code shall achieve compliance with said requirements by March 31, 1983.

(30) Any owner or operator of a synthesized pharmaceutical manufacturing facility which is subject to the requirements of paragraph (W) of rule 3745-21-09 of the Administrative Code shall achieve compliance with said requirements by December 31, 1982.

(31) Any owner or operator of a pneumatic rubber tire manufacturing facility which is subject to the requirements of paragraph (X) of rule 3745-21-09 of the Administrative Code shall achieve compliance with said requirements by December 31, 1982.

(32) Any owner or operator of a packaging rotogravure printing line, publication rotogravure printing line, or flexographic printing line which is subject to:

(a) The requirements of paragraph (Y)(1) of rule 3745-21-09 of the Administrative Code shall achieve compliance with said requirements by December 31, 1982.

(b) The requirements of paragraph (Y)(3) of rule 3745-21-09 of the Administrative Code shall achieve compliance with said requirements by no later than April 2, 2010.

(33) Any owner or operator of an external floating roof tank which is subject to the requirements of paragraph (Z) of rule 3745-21-09 of the Administrative Code shall achieve compliance with said requirements by December 31, 1982.

(34) (Reserved)

(35) "Honda of America Mfg., Inc." or any subsequent owner or operator of the "Honda of America Mfg., Inc." automobile assembly plant located at 24000 U.S. route 33, Marysville, Ohio shall achieve compliance with the requirements of paragraphs (C)(1)(c) and (C)(1)(d) of rule 3745-21-09 of the Administrative Code by December 31, 1986.

(36) Any owner or operator of a petroleum dry cleaning facility which is subject to the requirements of paragraph (BB) of rule 3745-21-09 of the Administrative Code shall achieve compliance with said requirements by December 31, 1987.

(37) Any owner or operator of a continuous, polystyrene resin manufacturing process which is subject to the requirements of paragraph (CC) of rule 3745-21-09 of the Administrative Code shall achieve compliance with said requirements by December 31, 1987.

(38) Except as otherwise provided in paragraph (C)(66) of this rule, any owner or operator of a process unit which produces organic chemicals and which is subject to the requirements of paragraph (DD) of rule 3745-21-09 of the Administrative Code shall achieve compliance with paragraph (DD)(2) of rule 3745-21-09 of the Administrative Code by February 1, 1987, and paragraphs (DD)(3) to (DD)(6) of rule 3745-21-09 of the Administrative Code by July 1, 1987.

(39) Except as otherwise provided in paragraph (C)(66) of this rule, any owner or operator of an air oxidation process which is subject to the requirements of paragraph (EE) of rule 3745-21-09 of the Administrative Code shall achieve compliance with said requirements by December 31, 1987.

(40) "The Steelcraft Manufacturing Company" or any subsequent owner or operator of "The Steelcraft Manufacturing Company" facility located at 9017 Blue Ash road, Cincinnati, Ohio shall achieve compliance with the requirements of paragraph (FF)(1) of rule 3745-21-09 of the Administrative Code by April 1, 1989, and paragraph (FF)(2) of rule 3745-21-09 of the Administrative Code by April 1, 1989.

(41) "Chevron U.S.A., Inc." or any subsequent owner or operator of the "Chevron U.S.A., Inc." barge loading facility located at state route 128 and U.S. route 50 in Hamilton county, Ohio shall achieve compliance with the requirements of

paragraph (GG) of rule 3745-21-09 of the Administrative Code by August 15, 1989.

(42) Any owner or operator of an automotive/transportation plastic parts coating line or a business machine plastic parts coating line which is subject to the requirements of paragraph (HH) of rule 3745-21-09 of the Administrative Code shall achieve compliance with said requirements no later than August 25, 2009.

(43) "International Paper Company" or any subsequent owner or operator of the "International Paper Company" facility located at 100 Progress place, Springdale, Ohio shall achieve compliance with the requirements of paragraph (II) of rule 3745-21-09 of the Administrative Code by March 31, 1993.

(44) "The Goodyear Tire and Rubber Company" or any subsequent owner or operator of "The Goodyear Tire and Rubber Company" facility located at 1376 Tech Way drive, Akron, Ohio shall achieve compliance with the requirements of paragraph (JJ) of rule 3745-21-09 of the Administrative Code by May 25, 1988.

(45) "Morton Thiokol, Inc." or any subsequent owner or operator of the "Morton Thiokol, Inc." facility located at 2000 West street, Cincinnati, Ohio shall achieve compliance with the requirements of paragraph (KK) of rule 3745-21-09 of the Administrative Code by May 25, 1988.

(46) "The Lubrizol Corporation" or any subsequent owner or operator of "The Lubrizol Corporation" facility located at 155 Freedom road, Painesville, Ohio shall achieve compliance with the requirements of paragraph (LL) of rule 3745-21-09 of the Administrative Code by October 1, 1989.

(47) "PPG Industries, Inc." or any subsequent owner or operator of the "PPG Industries, Inc." facility located at 3800 West 143rd street, Cleveland, Ohio shall achieve compliance with the requirements of paragraph (MM) of rule 3745-21-09 of the Administrative Code by May 25, 1988.

(48) "Von Roll USA, Inc." or any subsequent owner or operator of the "Von Roll USA, Inc." facility located at 4853 West 130th street, Cleveland, Ohio shall achieve compliance with the requirements of paragraph (NN) of rule 3745-21-09 of the Administrative Code no later than the deadlines in the following schedule:

(a) For machine 30, by June 1, 1989.

(b) For any machine other than machine 30, by December 31, 1989.

(49) "Armco Steel Company, L.P." or any subsequent owner or operator of the "Armco Steel Company, L.P." facility located at 1801 Crawford street, Middletown, Ohio shall achieve compliance with the requirements of paragraph (OO) of rule 3745-21-09 of the Administrative Code by March 31, 1993.

(50) "Formica Corporation" or any subsequent owner or operator of the "Formica Corporation" facility located at 10155 Reading road, Cincinnati, Ohio shall achieve compliance with the requirements of paragraph (PP) of rule 3745-21-09 of the Administrative Code by May 25, 1988.

(51) "DayColor Corp." or any subsequent owner or operator of the "DayColor Corp." facility located at 4515 St. Clair avenue, Cleveland, Ohio shall achieve compliance with the requirements of paragraph (QQ) of rule 3745-21-09 of the Administrative Code by May 1, 1994.

(52) (Reserved)

(53) "Ritrama Duramark" or any subsequent owner or operator of the "Ritrama Duramark" facility located at 341 Eddy Road, Cleveland, Ohio shall achieve compliance with the requirements of paragraph (SS) of rule 3745-21-09 of the Administrative Code by March 31, 1993.

(54) "ICI Americas Incorporated" or any subsequent owner or operator of the "ICI Americas Incorporated" facility located at 3647 Shepard road, Perry, Ohio shall achieve compliance with the requirements of paragraph (TT)(1) of rule 3745-21-09 of the Administrative Code by May 1, 1994, and paragraph (TT)(2) of rule 3745-21-09 of the Administrative Code by March 31, 1993.

(55) "British Petroleum Oil Company, Toledo Refinery" or any subsequent owner or operator of the "British Petroleum Oil Company, Toledo Refinery" facility located at 4001 Cedar Point road, Oregon, Ohio shall achieve compliance with the requirements of paragraph (UU)(1) of rule 3745-21-09 of the Administrative Code by May 1, 1995, paragraphs (UU)(2) and (UU)(3) of rule 3745-21-09 of the Administrative Code by May 1, 1993, paragraph (UU)(4) of rule 3745-21-09 of the Administrative Code by May 1, 1994, paragraph (UU)(5) of rule 3745-21-09 of the Administrative Code by October 1, 1993, and paragraph (UU)(6) of rule 3745-21-09 of the Administrative Code by January 1, 1995.

(56) "Ashland Petroleum Company" or any subsequent owner or operator of the "Ashland Petroleum Company" facility located at 2408 Gambrinus road, S.W., Canton, Ohio shall achieve compliance with the requirements of paragraph (VV) of rule 3745-21-09 of the Administrative Code by March 31, 1993.

(57) (Reserved)

(58) "Columbus Coated Fabrics" or any subsequent owner or operator of "Columbus Coated Fabrics" facility located at 1280 North Grant avenue, Columbus, Ohio shall achieve compliance with the requirements of paragraph (XX) of rule 3745-21-09 of the Administrative Code by December 31, 1995.

(59) "PMC Specialties Group" or any subsequent owner or operator of the "PMC Specialties Group" facility located at 501 Murray road, Cincinnati, Ohio shall achieve compliance with the requirements of paragraph (YY)(1) of rule 3745-21-09 of the Administrative Code by March 31, 1993, and paragraph (YY)(2) of rule 3745-21-09 of the Administrative Code by May 1, 1994.

(60) "Firestone Synthetic Rubber & Latex Company" or any subsequent owner or operator of the "Firestone Synthetic Rubber & Latex Company" facility located at 381 West Wilbeth road, Akron, Ohio shall achieve compliance with the requirements of paragraph (ZZ) of rule 3745-21-09 of the Administrative Code by May 1, 1994.

(61) (Reserved)

(62) "BF Goodrich Company, Akron Chemical Plant" or any subsequent owner or operator of the "BF Goodrich Company, Akron Chemical Plant" facility located at 240 West Emerling avenue, Akron, Ohio shall achieve compliance with the requirements of paragraph (BBB)(1) of rule 3745-21-09 of the Administrative Code by August 15, 1993, and paragraphs (BBB)(2) to (BBB)(4) of rule 3745-21-09 of the Administrative Code by December 15, 1994.

(63) (Reserved)

(64) Any owner or operator of a gasoline dispensing facility which is subject to the requirements of paragraph (DDD) of rule 3745-21-09 of the Administrative Code shall achieve compliance with said requirements no later than the deadlines in the following paragraphs:

(a) For any gasoline dispensing facility not owned by an independent small business marketer:

(i) For any gasoline dispensing facility for which construction commenced after November 15, 1990 and prior to March 31, 1993, by September, 1993;

(ii) For any gasoline dispensing facility which dispenses at least one hundred thousand gallons of gasoline per month (based upon the average monthly sales of gasoline during the period from November 16, 1990 through November 15, 1992), by March 31, 1994; and,

(iii) For any other gasoline dispensing facility not covered by paragraphs (C)(64)(a)(i) and (C)(64)(a)(ii) of this rule, by March 31, 1995.

(b) For gasoline dispensing facilities owned by independent small business marketers:

(i) For a minimum of thirty-three per cent of the gasoline dispensing facilities owned by each such marketer, by March 31, 1994.

(ii) For a minimum of sixty-six per cent of the gasoline dispensing facilities owned by such marketer, by March 31, 1995.

(iii) For one hundred per cent of the gasoline dispensing facilities owned by each such marketer, by March 31, 1996.

(65) Any owner or operator of an air contaminant source which is located in Ashtabula, Clark, Delaware, Geauga, Licking, or Miami county and which, prior to March 31, 1993, was exempt from the requirements of paragraphs (C) to (M), (O) to (R), (T), (U), and (W) to (EE) of rule 3745-21-09 of the Administrative Code because the facility's potential to emit is less than one hundred tons of VOC per calendar year, shall achieve compliance with said requirements by April 1, 1995.

(66) "Georgia Resins, Inc." or any subsequent owner or operator of the "Georgia Resins, Inc." facility located at 1975 Watkins road, Columbus, Ohio shall achieve compliance with paragraphs (DD) and (EE) of rule 3745-21-09 of the Administrative Code for the process unit which produces urea-formaldehyde by May 1, 1994.

Effective: 08/26/2011

R.C. 119.032 review dates: 08/25/2013

CERTIFIED ELECTRONICALLY
Certification

08/16/2011
Date

Promulgated Under: 119.03
Statutory Authority: 3704.03(E)
Rule Amplifies: 3704.03(A), 3704.03(E)
Prior Effective Dates: 7/28/75, 10/19/79, 3/27/81, 6/21/82, 1/24/83, 5/9/86, 5/25/88, 8/22/90, 3/31/93, 1/17/95, 6/15/99, 11/5/02, 2/10/06, 8/25/08

OAC rule 3745-21-05 was rescinded as of October 31, 1996

3745-21-06 **Classification of regions.**

The following counties shall be classified as "Priority I" for determining the applicability of rule 3745-21-07 of the Administrative Code: Butler, Clark, Clermont, Cuyahoga, Darke, Delaware, Fairfield, Franklin, Geauga, Greene, Hamilton, Lake, Licking, Lorain, Lucas, Madison, Medina, Miami, Montgomery, Perry, Pickaway, Portage, Preble, Stark, Summit, Union, Warren and Wood.

Effective: 08/25/2008

R.C. 119.032 review dates: 02/21/2008 and 08/25/2013

CERTIFIED ELECTRONICALLY
Certification

08/15/2008
Date

Promulgated Under: 119.03
Statutory Authority: 3704.03(E)
Rule Amplifies: 3704.03(E), 3704.03(A)
Prior Effective Dates: 2/15/1972, 10/19/1979, 11/5/2002

3745-21-07 **Control of emissions of organic materials from stationary sources (i.e., emissions that are not regulated by rule 3745-21-09, 3745-21-12, 3745-21-13, 3745-21-14, 3745-21-15, 3745-21-16, or 3745-21-18 of the Administrative Code).**

[Comment: For dates of non-regulatory government publications, publications of recognized organizations and associations, federal rules, and federal statutory provisions referenced in this rule, see the last paragraph of rule 3745-21-01 of the Administrative Code entitled "Incorporation by Reference."]

(A) Applicability.

(1) RESERVED

(2) RESERVED

(3) The requirements of this rule shall apply to any source or operation, for which installation commenced prior to the effective date of this rule and that is specified in paragraphs (K) to (N) of this rule, but shall not apply to VOC emissions from any such source or operation that are regulated by rule 3745-21-09, 3745-21-12, 3745-21-13, 3745-21-14, 3745-21-15, 3745-21-16, or 3745-21-18 of the Administrative Code. Any owner or operator of any subject source or operation specified in paragraphs (K) to (N) of this rule shall comply with the facility-specific and general control requirements of this rule as of the effective date of this rule.

(4) Any emission limitation, control requirement, or operational restriction contained in a permit-to-install, permit-by-rule, permit-to-operate, or Title V permit that is based upon a citation to this rule number, except the emission limitations and control requirements specified in paragraphs (K)(2), (K)(4), (L)(2), (M)(2), (M)(3), (M)(4), and (N)(2) of this rule, shall be void upon the effective date of this rule.

[Comment: As examples of the applicability of this paragraph, if a permit-to-install, a permit-by-rule, a permit-to-operate, or a Title V permit has been issued prior to the effective date of this rule and contains both a citation to rule 3745-21-07 of the Administrative Code and one of the associated requirements referenced within this comment, the associated requirements contained in such a permit shall be void upon the effective date of this rule. The associated requirements covered by this comment shall include: (a) any requirement that prohibits the use of photochemically reactive materials, or prohibits the use of volatile photochemically reactive materials; (b) any requirement that limits organic compound emissions from an operation to eight pounds per hour and forty pounds per day, except as specified in paragraphs (M)(3)(d) and (M)(3)(g)

of this rule; (c) any requirement to determine or document materials as being photochemically reactive materials; and (d) any recordkeeping and reporting requirements related to requirements referred to in (a), (b) or (c) of this comment.

All other permit conditions, including annual emission or material usage limitations (tons per year, gallons per day or month or year, VOC per gallon, etc.) and all other recordkeeping and reporting requirements associated with those permit conditions remain in effect.]

(5) The requirements of this rule shall not apply to any source, including any new source as defined in rule 3745-15-01 of the Administrative Code, for which installation commenced after the effective date of this rule.

(6) For any source or operation specified in paragraphs (K) to (N) of this rule that is subject to a mass emission rate, control efficiency, overall control efficiency, or emission reduction, the owner or operator shall determine compliance by means of the following:

(a) For controlled and uncontrolled sources, the test methods and procedures of paragraphs (A) to (C) of rule 3745-21-10 of the Administrative Code; or

(b) An emission factor approved by the USEPA, such as an emission factor from the "Compilation of Air Pollutant Emission Factors, Volume 1: Stationary Point and Area Sources (AP-42);" or

(c) Emissions test data from similar sources or operations, provided such emissions tests comply with the test methods and procedures of paragraphs (B) and (C) of rule 3745-21-10 of the Administrative Code, and the USEPA has indicated in writing that the use of such tests is acceptable.

The use of emissions test data, if available, from a source or operation specified in paragraphs (K) to (N) of this rule shall take precedence over the use of an emission factor approved by the USEPA or the use of emission test data from similar sources or operations.

(B) RESERVED

(C) RESERVED

(D) RESERVED

(E) RESERVED

(F) RESERVED

(G) RESERVED

(H) RESERVED

(I) RESERVED

(J) RESERVED

(K) Facility-specific control requirements for storage tanks (stationary tank, reservoir, or other container):

(1) The owner or operator, or any subsequent owner or operator of each storage tank identified in this paragraph, shall comply with the control requirements specified in paragraph (K)(2) of this rule:

- (K)(1) Emissions Units -

Owner or Operator	Facility ID	Emissions Unit ID
The Glidden Company	0322000043	T009, T025 - T029, T042, T044, T045, T049, T052, T053, T063 - T067, T074, T076
Marathon Ashland Petroleum, LLC	1318082830	T004

(2) No person shall place, store or hold in any storage tank identified in paragraph (K)(1) of this rule, any liquid organic material that has a vapor pressure of 1.5 pounds per square inch absolute or greater, under actual storage conditions, unless the storage tank is equipped with one of the following vapor loss control equipment:

(a) The storage tank shall be equipped with a floating pontoon or double-deck type cover that includes closure seals to enclose any space between the cover's edge and the compartment wall. This control requirement shall not be permitted if the liquid organic material in the tank has a vapor pressure of 12.5 pounds per square inch absolute or greater under actual storage conditions. All tank gauging or sampling devices shall be gas tight except when tank gauging or sampling is taking place.

(b) The storage tank shall be equipped with a vapor recovery system or control system that reduces the emission of organic compounds into the atmosphere by at least ninety per cent by weight. All tank gauging or sampling devices shall be gas tight except when tank gauging or sampling is taking place.

(3) The owner or operator, or any subsequent owner or operator of each storage tank (stationary storage vessel) identified in this paragraph, shall comply with the control requirements specified in paragraph (K)(4) of this rule:

-(K)(3) Emissions Units -

Owner or Operator	Facility ID	Emissions Unit ID
Newark Air Force Base/AGMC	0145020224	T012, T013
The Lubrizol Corporation, Wickliffe Facility	0243150025	T224, T225
Veolia Environmental Services, LLC	0857751346	P006, T001, T005-T007, T017-T026, T040-T042, T044-T049, T051-T065, T068
GE Lighting, Ivanhoe Road	1318000156	T012, T013
Clorox Co.	1318000864	T012
Buckeye Terminals, LLC, Cleveland Plant	1318002740	T011, T012
Tremco, Inc.	1318002813	T021, T023, T036-T041
Hukill Chemical Corporation	1318030172	T062-T070, T077-T081, T083, T089-T093, T095-T097, T100
Marathon Ashland Petroleum Corporation	1318082830	T004, T018
Glastic Corporation, Cleveland Facility	1318544510	T009
Strongsville Expressmart	1318554294	T008

(4) No person shall place, store or hold in any storage tank identified in paragraph (K)(3) of this rule, any liquid organic material that has a vapor pressure of 1.5 pounds per square inch absolute or greater, under actual storage conditions, unless the storage tank is equipped with a permanent submerged fill pipe, or is loaded through the use of a portable loading tube which can be inserted below the liquid level line during loading operations, or is fitted with a vapor recovery system as described in paragraph (K)(2)(b) of this rule.

(L) Facility-specific control requirements for oil-water separators (effluent water separators):

(1) The owner or operator, or any subsequent owner or operator of each oil-water separator identified in this paragraph, shall comply with the control requirements specified in paragraph (L)(2) of this rule:

-(L)(1) Emissions Units-

Owner or Operator	Facility ID	Emissions Unit ID
Marathon Ashland Petroleum, LLC	0125040071	P002

(2) No person shall use any oil-water separator identified in paragraph (L)(1) of this rule that recovers any liquid organic material which has a vapor pressure of 1.5

pounds per square inch absolute or greater unless the oil-water separator complies with one of the following:

(a) The oil-water separator shall be equipped with a solid cover with all openings sealed and totally enclosing the liquid contents of the compartment. All gauging and sampling devices shall be gas tight except when gauging or sampling is taking place.

(b) The oil-water separator shall be equipped with a floating pontoon or double-deck type cover that includes closure seals to enclose any space between the cover's edge and compartment wall. All gauging and sampling devices shall be gas tight except when gauging or sampling is taking place.

(c) The oil-water separator shall be equipped with a vapor recovery system that reduces the emission of organic compounds into the atmosphere by at least ninety per cent by weight. All gauging and sampling devices shall be gas tight except when gauging or sampling is taking place.

(M) Facility-specific and general control requirements for emissions from operations using liquid organic materials:

(1) The owner or operator, or any subsequent owner or operator of each article, machine, equipment or other contrivance identified in this paragraph, shall comply with the control requirements specified in paragraph (M)(2) of this rule.

-(M)(1) Emissions Units-

Owner or Operator	Facility ID	Emissions Unit ID
TS Trim Industries, Inc.	0125031840	R019-R021, R024, R025
Akzo Nobel	0125040064	J002, P001, P002, P201-P224, P226-P262, P275-P291, P305-P308, P310-P313, P315-P325, P365-P370
Plaskolite, Inc.	0125040915	P013-P015, P042, R001, R003, R004, P052
Core Molding Technologies, Inc.	0125041046	P007
Safety-Kleen Corp. - Hebron Recycle Center	0145020235	P001-P011, P013, P016
Stanley Electric US Company	0149000089	R022, R023
Plastech Engineered Products, Inc.	0204000060	P010, R129-R136
Iten Industries, Inc., Plant 1	0204010112	P003
Pinney Dock and Transport Co.	0204010172	P001
Clean Harbors PPM, LLC	0204010288	P003-P005, L004-L006
Waste Technologies Industries, Inc.	0215020233	T008, T009, T012, T018, T019, T022-T024, T027-T029, T032, T033, T036-T038, T042-T045,

		T048, T050, T053, T062, T063
Structural North America	0228000101	P004, P005, P007-P009, P011
Kraftmaid Cabinetry, Inc., Middlefield #1	0228000186	K001-K019
Ohio Sealants	0243081155	P001-P003, P012, P015
Chem Development	0243081245	K001
PFF/MFD/STD of Avery Dennison	0243110099	P071 (distillation unit emissions only)
The Lubrizol Corporation, Wickliffe Facility	0243150025	P011, P012
GE Quartz, Inc., Willoughby Plant	0243160086	P016
Noveon, Inc.	0247030004	P007, P008, P020, P026
Degussa Initiators, LLC	0247040079	P001, P006, P010
Cantar/Polyair Corp.	0250110960	P001, P002
Roemer Industries, Inc.	0278000728	P001
Peerless -Winsmith, Inc.	0278080251	P001
A.R.E, Inc., Mt. Eaton Facility	0285000291	R004-R007, R012-R014, R016
The Glidden Company	0322000043	P007-P022
Guardian Manufacturing	0339030016	P001, P002, P004
Union Tank Car Company	0351010025	P002
Eaton INOAC, Co.	0372030199	P008, P019, R009, R011, R018
Continental Structural Plastics	0387000042	R012-R015
Norplas Industries, Inc.	0387000362	R001
Continental Structural Plastics	0388000002	R009
Manufacturers Enameling Corporation	0448010240	K001, K002, K011-K014, K021-K023
Tembec BTLSR, Inc.	0448010370	P001-P003
Decorative Panels International, Inc.	0448011193	K001
Thermoseal, Inc.	0575010161	P001-P005, P008, P009, P011, P012, P015
LESCO, Inc.	0607090125	F005-F007
Plastech Engineered Products, Inc.	0630000007	P007, R016, R018, R019, R021
Merillat Industries, Inc.	0640010020	K002, K003, R007
Mill's Pride, Inc.	0666010033	K001, R001-R004, R011, R013
Kraton Polymers U.S., LLC	0684010011	P004 (wet end only), P006 (wet end only), P007 (wet end only), P010 (wet end only)
BASF Corporation	0819070134	P001, P008-P011, P013-P016, P021-P025, P028, P029, P031
Greenville Technologies, Inc.	0819070190	K001, K002, K003, K005, R001-R003
Florida Production Engineering	0819100218	K001

Troy Laminating and Coating, Inc.	0855140077	P009, P010, P014
Delphi Chassis Systems, Needmore Operations	0857040018	P094, P104, P116
Dupont Electronic Polymers, LP	0857040727	P025, P027
Delphi Chassis Systems, Home Avenue	0857040931	K017
Pitney Bowes	0857090717	P024, P030, P031
Eurand	0857171794	P001, P008, P012-P015, P017, P019, P020
Veolia Environmental Services, LLC	0857751346	P007-P009
Neaton Auto Products Manufacturing, Inc.	0868030155	K016
Rohm and Haas Chemicals, LLC	0868090072	P505-P511, P520, P521, P524
Day-Glo Color Corp.	1318006552	P021
The Chemical Solvents, Inc.	1318007651	P009
Ineos ABS Corporation	1431010054	P001, P021, P022, P042, P047, P048
H.B. Fuller Company	1431052206	P003-P008
Givaudan Flavors Corporation	1431070914	P020
Queen City Barrel Company	1431070953	N001, P012
Richard Miller Water Treatment Plant	1431072596	N004, N005
Spring Grove Resource Recovery	1431072600	J001, T008-T011, P016
Environmental Enterprises	1431072690	P002
Ruetgers Organics Corporation	1431111828	P011, P012, P024-P028, P801, P803
Owens Corning Trumbull	1431302438	P001-P003
PMC Specialties, Inc.	1431390137	P006,P008, P010, P011, P014, P022, P901
St. Bernard Soap Company	1431394137	P001, P104-P107
Alex Fries and Bros., Inc.	1431423764	P002, P003
CDR Pigments and Dispersions	1431483219	P001-P005
Blackhawk Automotive Plastics, Inc.	1483090101	R031, R032
A.R.E., Inc., Massilon	1576131793	K001-K004, P001-P003, P010, P011, T001, T002
Schneller, Inc.	1667040015	K005
Emerald Polymer Additives, LLC	1677010029	P007
PPG Industries, Barberton Plant	1677020009	P098, P099, P110, P114

(2) Each article, machine, equipment or other contrivance identified in paragraph (M)(1) of this rule, or meeting the specifications of paragraph (M)(3)(a) of this rule, shall be equipped with a control system (i.e., capture and control equipment) that reduces the organic compound emissions from the article, machine, equipment or other contrivance by an overall control efficiency of at least eighty-five per cent, by weight. If the reductions are achieved by incineration, ninety per cent or more of the carbon in the organic material being incinerated shall be oxidized to carbon dioxide.

(3) Other operations using liquid organic materials.

(a) Any article, machine, equipment or other contrivance that meets all of the following conditions shall comply with the control requirements specified in paragraph (M)(2) of this rule:

(i) Is an existing source located within a "Priority I" county, as identified in rule 3745-21-06 of the Administrative Code, or a new source, as defined in rule 3745-15-01 of the Administrative Code, regardless of location.

(ii) Commenced installation prior to the effective date of this rule.

(iii) Uses a liquid organic material or a substance containing a liquid organic material.

(iv) Is equipped with control equipment for organic compound emissions.

(v) The emissions are not subject to control requirements specified in rule 3745-21-09, 3745-21-12, 3745-21-13, 3745-21-14, 3745-21-15, 3745-21-16, or 3745-21-18 of the Administrative Code.

(vi) Is not specified in paragraph (K)(1), (K)(3), (L)(1), (M)(1) or (N)(1) of this rule.

(vii) Does not meet any of the conditions specified under paragraph (M)(3)(c) of this rule.

(viii) Is not specified in paragraph (M)(3)(d) of this rule.

(ix) Is not fuel burning equipment, as defined in paragraph (B)(5) of rule 3745-17-01 of the Administrative Code.

(b) The owner or operator of any article, machine, equipment, or other contrivance meeting the specifications of paragraph (M)(3)(a) of this rule, and not specified in paragraph (M)(1) of this rule, shall notify Ohio environmental protection agency of the need to be specified in paragraph

(M)(1) of this rule. Such notification shall be submitted within ninety days after the effective date of this rule.

(c) Any article, machine, equipment or other contrivance that meets any of the following conditions shall not be subject to the requirements of paragraphs (M)(3)(a) and (M)(3)(b) of this rule:

(i) The article, machine, equipment, or other contrivance commenced installation after the effective date of this rule.

(ii) The uncontrolled potential to emit for organic compound emissions from the article, machine, equipment or other contrivance does not exceed forty pounds per day where uncontrolled potential to emit for organic compound emissions means the capability at maximum capacity of an article, machine, equipment or other contrivance to emit organic compounds under its physical and operational design. Any physical or operational limitation on the capability of an article, machine, equipment or other contrivance to emit organic compounds, including restrictions on the hours of operation or on the type or amount of material processed, but not including restrictions pertaining to air pollution control equipment, shall be treated as part of its physical and operational design if the limitation or the effect it would have on organic compound emissions is federally enforceable or legally and practicably enforceable by the state.

(iii) The article, machine, equipment or other contrivance is subject to and complying with a best available technology requirement, pursuant to rule 3745-31-05 of the Administrative Code, that specifies an overall control efficiency for organic compound or VOC emissions that is greater than eighty-five per cent, by weight.

(iv) The article, machine, equipment or other contrivance is subject to and complying with a federal regulation that specifies an overall control efficiency for organic compound or VOC emissions that is greater than eighty-five per cent, by weight.

(v) The article, machine, equipment or other contrivance is subject to and complying with paragraph (M)(3)(g) or (M)(4) of this rule.

(vi) The article, machine, equipment or other contrivance is a heatset web offset printing line that is subject to and complying with a best available technology requirement, pursuant to rule 3745-31-05 of the Administrative Code, that specifies the dryer(s) to be equipped with a control device having either a control efficiency for organic compound or VOC emissions that is equal to or greater than ninety per cent, by weight, or an outlet concentration of less than twenty parts per million,

by volume, dry basis for organic compound or VOC emissions (a heatset web offset printing line is an offset lithographic printing line in which the substrate is continuously fed from a roll and a heated oven is used to dry the printing inks).

(vii) The article, machine, equipment or other contrivance is regulated by and complying with Chapter 3745-76 of the Administrative Code.

(d) The following specific articles, machines, equipment or other contrivances shall not be subject to the requirements of paragraphs (M)(3)(a) and (M)(3)(b) of this rule:

(i) Any emissions unit identified in paragraphs (M)(3)(d)(ii) to (M)(3)(d)(x) of this rule that obtains an alternative emission limitation or control requirement pursuant to paragraph (M)(5)(e) of this rule.

(ii) Emissions unit R001 at the "Dee Sign Company" (facility ID 1409000675), provided that the organic compound emissions from the emissions unit are controlled by means of a thermal incinerator that maintains an overall control efficiency of at least 74.1 per cent, by weight, in accordance with permit-to-install 14-2185.

(iii) Emissions units P001, P002, P003, P004, P005, P007, P008, P009 and P010 at "The Nylonge Corporation" (facility ID 0247040822), provided that the organic compound emissions from the emissions units are controlled by means of a packed bed scrubber and biofiltration system that maintain an overall control efficiency of at least eighty per cent, by weight, in accordance with permit-to-install 02-13356.

(iv) Emissions unit P001 at "Fort Amanda Specialties, LLC" (facility ID 0302020097), provided that the organic compound emissions from the emissions unit are controlled by means of a packed bed scrubber that limits emissions to 0.04 pounds per hour, in accordance with permit-to-install 03-5696.

(v) The following emissions units at "Franklin International" (facility ID 0125040070), provided that all the emissions units are controlled by a condenser that limits the VOC emissions to the levels specified below:

(a) For emissions unit P103, eight pounds per hour and forty pounds per day;

(b) For emissions unit P106, 6.5 pounds per hour and 32.3 pounds per day, in accordance with permit-to-install 01-05683;

(c) For emissions unit P107, 6.5 pounds per hour and 32.3 pounds per day, in accordance with permit-to-install 01-05683;

(d) For emissions unit P113, eight pounds per hour and forty pounds per day;

(e) For emissions unit P114, eight pounds per hour and forty pounds per day;

(f) For emissions unit P115, 7.3 pounds per hour and 32.3 pounds per day, in accordance with permit-to-install 01-08402;

(g) For emissions unit P116, 6.5 pounds per hour and 32.3 pounds per day, in accordance with permit-to-install 01-05683;

(h) For emissions unit P124, 4.38 pounds per hour and 21.92 pounds per day, in accordance with permit-to-install 01-05232;

(i) For emissions unit P125, 7.8 pounds per hour and 39.0 pounds per day, in accordance with permit-to-install 01-06303; and

(j) For emissions unit P127, 6.92 pounds per hour and 32.3 pounds per day, in accordance with permit-to-install 01-08402.

(vi) Emissions unit R201 at "Honda Marysville Auto Plant" (facility ID 0180000130), provided that this emissions unit is equipped with capture and control equipment that provide not less than an eighty-one per cent reduction, by weight, in the overall organic compound emissions from the application and drying of plastic part coatings within this emissions unit. For any reductions that are achieved by incineration, the incineration equipment shall provide not less than ninety per cent, by weight, destruction (control) efficiency.

(vii) The following emissions units at "Honda Anna Engine Plant" (facility ID 0575000174), provided that VOC emissions are controlled and limited as follows:

(a) For emissions unit P087, use of a wet scrubber only when the binder system employs triethylamine to complete the reaction, 1.82 pounds per hour of stack emissions, 0.008 pounds per hour of fugitive emissions, and 40.0 pounds per day of stack and fugitive emissions combined, in accordance with permit-to-install 05-12593; and

(b) For emissions unit P097, 8 pounds per hour, and 40 pounds per day, in accordance with permit-to-install 05-14422.

(viii) Deco Booth 1 and Mask Washers associated with emissions unit K003 at "Florida Production Engineering" (facility ID 0819100218), provided that the organic compound emissions from the emissions unit are controlled by means of a capture system and thermal oxidizer that meet the following, in accordance with permit-to-install 08-04088:

(a) The capture system has a capture efficiency of at least eighty per cent (by weight for organic compound emissions) and is vented to the thermal oxidizer; and

(b) The thermal oxidizer is operating with a destruction efficiency of at least ninety-five per cent (by weight for organic compound emissions), or the total organic compound concentration at the outlet is less than fifteen parts per million by volume as propane on a dry basis, whichever is less stringent.

(ix) Emissions unit P080 at "PPG Industries, Barberton Plant" (facility ID 1677020009), provided that the organic compound emissions are limited to less than forty pounds per day and are controlled by a flare or other control device when necessary to limit emissions to less than forty pounds per day, in accordance with permit-to-install 16-1102.

(e) "Cooper Standard Automotive, LLC" (facility ID 0387020045) or any subsequent owner or operator of the "Cooper Standard Automotive, LLC" facility located at "1175 North Main Street, Bowling Green, Ohio" shall not cause, allow or permit the discharge into the ambient air of any VOC from flock line number 1, 2, 3, or 4 (includes emissions units R008, R011, R012, P014, P018 and P021, in accordance with permit-to-install 03-11229, and R029 and P044 in accordance with permit-to-install 03-10454) unless the VOC content of the adhesive or other coating employed within said flock line does not exceed 2.6 pounds of VOC per gallon of coating, excluding water and exempt solvents (as applied).

(f) "GMC-Truck and Bus Group-Moraine" (facility ID 0857101349) or any subsequent owner or operator of the "GMC-Truck and Bus Group-Moraine" facility located at "2601 West Stroop Road, Dayton, Ohio" shall not cause, allow or permit the discharge into the ambient air of any VOC from the windshield glass system coating operation (emissions unit K031 in accordance with permit-to-install 08-03719) unless each coating employed in said coating operation has a maximum VOC content, as applied, that does not exceed the following, in accordance with permit-to-install 08-3719:

(i) 7.3 pounds of VOC per gallon of coating, excluding water and exempt solvents, for the clear prime;

(ii) 5.1 pounds of VOC per gallon of coating, excluding water and exempt solvents, for the black prime; and

(iii) 0.08 pound of VOC per gallon of coating, excluding water and exempt solvents, for the urethane sealer.

(g) Except as provided in paragraphs (M)(3)(h) and (M)(5) of this rule, this paragraph applies to all existing sources located within a "Priority I" county, as identified in rule 3745-21-06 of the Administrative Code, and to all new sources, as defined in rule 3745-15-01 of the Administrative Code, regardless of location, for which installation commenced prior to the effective date of this rule. The owner or operator, or any subsequent owner or operator of each sheet molding compound manufacturing operation shall not discharge from such operation more than forty pounds of organic materials into the atmosphere in any one day, nor more than eight pounds in any one hour, unless said discharge has been reduced by at least eighty-five per cent, by weight. If the reductions are achieved by incineration, ninety per cent or more of the carbon in the organic material being incinerated shall be oxidized to carbon dioxide. A sheet molding compound manufacturing operation is defined as a process which involves the production of a molding compound, that contains a resin, into sheet form. In this manufacturing operation, the molding compound is sandwiched between top and bottom films.

(h) "Venture Holdings Corporation - Conneaut Facility" (facility ID 0204020245) or any subsequent owner or operator of the "Venture Holdings Corporation - Conneaut Facility" located at "333 Gore Road, Conneaut, Ohio" shall not cause, allow or permit the discharge into the ambient air of organic compounds or VOC from sheet mold compound machine number 2 (emissions unit P027) unless all of the following requirements are met, in accordance with permit-to-install 02-18224:

(i) Organic compound emissions shall not exceed 61.20 pounds per day from production operations;

(ii) The resin delivery system to the doctor box on each SMC manufacturing machine must be closed or covered (the doctor box itself may be open);

(iii) A nylon containing film must be used to enclose the sheet molding compound; and

(iv) The use of materials containing VOC is prohibited in cleanup and purge.

(4) Except as provided in paragraph (M)(5) of this rule, this paragraph applies to all existing sources located within a "Priority I" county, as identified in rule 3745-21-06 of the Administrative Code, and to all new sources, as defined in rule 3745-15-01 of the Administrative Code, regardless of location, for which installation commenced prior to the effective date of this rule. The owner or operator, or any subsequent owner or operator of each article, machine, equipment or other contrivance in which any liquid organic material or substance containing liquid organic material comes into contact with flame or is baked, heat-cured, or heat-polymerized, in the presence of oxygen, and is not specified in paragraph (M)(1) of this rule, shall not discharge from such source more than fifteen pounds of organic materials into the atmosphere in any one day, nor more than three pounds in any one hour, unless said discharge has been reduced by at least eighty-five per cent, by weight. If the reductions are achieved by incineration, ninety per cent or more of the carbon in the organic material being incinerated shall be oxidized to carbon dioxide.

(5) Exemptions.

(a) The provisions of paragraph (M)(2) of this rule shall not apply to the use of any cleanup material in any article, machine, equipment, or other contrivance described in paragraph (M)(2) of this rule.

(b) The provisions of paragraphs (M)(2), (M)(3)(a) and (M)(4) of this rule shall not apply to the emission from any material used in any article, machine, equipment or other contrivance described in paragraphs (M)(2), (M)(3)(a) and (M)(4) of this rule if the emission is not a VOC.

(c) The provisions of paragraph (M)(2) of this rule shall not apply to the use, in any article, machine, equipment or other contrivance described in paragraph (M)(2) of this rule, of liquid organic materials which exhibit a boiling point higher than two hundred degrees Fahrenheit at 0.5 millimeter mercury absolute pressure, or having an equivalent vapor pressure, unless such liquid organic material is exposed to temperatures exceeding two hundred twenty degrees Fahrenheit.

(d) The provisions of paragraph (M)(4) of this rule shall not apply if:

(i) The volatile content of the material described in paragraph (M)(4) of this rule consists only of water and liquid organic material, and the liquid organic material comprises not more than twenty per cent, by volume, of said volatile content; or

(ii) The volatile content of the material described in paragraph (M)(4) of this rule does not exceed twenty per cent by volume of said material.

(e) The provisions of paragraphs (M)(2), (M)(3)(d), (M)(3)(e), (M)(3)(f), (M)(3)(g), (M)(3)(h) and (M)(4) of this rule shall not apply if all the following conditions are met:

(i) The director has determined that best available technology for the article, machine, equipment or other contrivance, as required by rule 3745-31-05 of the Administrative Code, is a control requirement or emission limitation that is either less stringent than or inconsistent with the requirements of paragraph (M) of this rule. Best available technology shall be defined in accordance with division (F) of section 3704.01 of the Revised Code and, for purposes of this paragraph, shall provide, where an emission limitation is applicable, the lowest emission limitation that the article, machine, equipment or other contrivance is capable of meeting by the application of control technology that is reasonably available considering technological and economic feasibility. Also, for an article, machine, equipment or other contrivance located within an ozone nonattainment area, the best available technology determination must comply with section 193 of the Clean Air Act amendments of 1990, general savings clause.

(ii) The USEPA has informed the Ohio environmental protection agency, in writing, prior to the issuance of a final permit-to-install for the article, machine, equipment or other contrivance, that the USEPA has no objection to the issuance of the final permit and the control requirement or emission limitation specified therein.

(iii) A final permit-to-install has been issued for the article, machine, equipment or other contrivance pursuant to Chapter 3745-31 of the Administrative Code. The permit-to-install shall contain terms and conditions that are consistent with the approval granted by the USEPA pursuant to paragraph (M)(5)(e)(ii) of this rule, and that specify the control requirement or emission limitation that is the basis for the director's best available technology determination for the article, machine, equipment or other contrivance, as described in paragraph (M)(5)(e)(i) of this rule. The permit-to-install shall be issued by the Ohio environmental protection agency in a manner that makes the control requirement or emission limitation federally enforceable.

(f) The provisions of paragraph (M) of this rule shall not apply to the emissions resulting from the use of any liquid organic materials in any article, machine, equipment or other contrivance if those emissions are regulated by rule 3745-21-09, 3745-21-12, 3745-21-13, 3745-21-14, 3745-21-15, 3745-21-16, or 3745-21-18 of the Administrative Code.

(g) The provisions of paragraphs (M)(3)(a), (M)(3)(b), (M)(3)(g) and (M)(4) of this rule shall not apply to sources that are located in Darke, Fairfield,

Madison, Perry, Pickaway, Preble or Union county and that are within a facility having the potential to emit not more than one hundred tons of organic compounds per calendar year.

(h) The provisions of paragraph (M)(3)(g) of this rule shall not apply to any sheet molding compound manufacturing operation (machine) in which all of the following requirements are met:

(i) The resin delivery system to the doctor box on the sheet molding compound manufacturing machine must be closed or covered (the doctor box itself may be open). A doctor box is defined as the box or trough on a sheet molding compound manufacturing machine into which the liquid resin paste is delivered before it is metered onto the carrier film.

(ii) A nylon containing film must be used to enclose the sheet molding compound.

(N) Facility-specific control requirements for waste gas flare systems:

(1) The owner or operator, or any subsequent owner or operator, of each waste gas flare system identified in this paragraph shall comply with the control requirements specified in paragraph (N)(2) of this rule:

-(N)(1) Emissions Units -

Owner or Operator	Facility ID	Emissions Unit ID
City of Urbana	0511010123	P001
CECOS International	1413000186	P001

(2) The waste gas flare system identified in paragraph (N)(1) of this rule shall employ a smokeless flare or equally effective control equipment for organic compound emissions.

(3) "Aircraft Braking Systems Corp." (facility ID 1677010999) or any subsequent owner or operator of the "Aircraft Braking Systems Corp." facility located at "1204 Massillon Road, Akron, Ohio" shall not emit a waste gas stream into the atmosphere from emissions units P036, P037, P038, P039, P040, P041, and P044 unless such waste gas stream is properly burned at 1300 degrees Fahrenheit for 0.3 seconds or greater in a direct-flame afterburner or equally effective control device for organic compound emissions.

Replaces: 3745-21-07

Effective: 02/18/2008

R.C. 119.032 review dates: 02/18/2013

CERTIFIED ELECTRONICALLY
Certification

02/08/2008
Date

Promulgated Under: 119.03
Statutory Authority: 3704.03(A), 3704.03(E)
Rule Amplifies: 3704.03(E)
Prior Effective Dates: 2/15/72, 10/19/79, 10/31/96, 6/15/99

3745-21-08 **Control of carbon monoxide emissions from stationary sources.**

(A) (Reserved)

(B) (Reserved)

(C) (Reserved)

(D) No person shall install a "new source", as defined by rule 3745-31-01 of the Administrative Code, from which the carbon monoxide gases generated during the operation of a grey iron cupola, blast furnace, or basic oxygen steel furnace are emitted into the atmosphere, unless they are burned at one thousand three hundred degrees Fahrenheit for 0.3 seconds or greater in a direct-flame afterburner or equivalent device equipped with an indicating pyrometer which is positioned in the working area at the operator's eye level.

(E) No person shall install a "new source", as defined by rule 3745-31-01 of the Administrative Code, from which the carbon monoxide waste gas stream from any petroleum fluid coker or other petroleum process, except for a catalyst regeneration process associated with a petroleum cracking system, is emitted into the atmosphere, unless the waste gas stream is burned at one thousand three hundred degrees Fahrenheit for 0.3 seconds or greater in a direct-flame afterburner or boiler equipped with an indicating pyrometer which is positioned in the working area at the operator's eye level.

Effective: 08/25/2008

R.C. 119.032 review dates: 02/21/2008 and 08/25/2013

CERTIFIED ELECTRONICALLY
Certification

08/15/2008
Date

Promulgated Under: 119.03
Statutory Authority: 3704.03(E)
Rule Amplifies: 3704.03(E), 3704.03(A)
Prior Effective Dates: 2/15/1972, 10/19/1979, 11/5/2002

3745-21-09 **Control of emissions of volatile organic compounds from stationary sources and perchloroethylene from dry cleaning facilities.**

[Comment: For dates and availability of non-regulatory government publications, publications of recognized organizations and associations, federal rules, and federal statutory provisions referenced in this rule, see paragraph (JJ) of rule 3745-21-01 of the Administrative Code titled "Reference to materials."]

(A) Applicability.

(1) In Ashtabula, Butler, Clark, Clermont, Cuyahoga, Delaware, Franklin, Geauga, Greene, Hamilton, Lake, Licking, Lorain, Lucas, Mahoning, Medina, Miami, Montgomery, Portage, Stark, Summit, Trumbull, Warren and Wood counties, the requirements of paragraphs (C) to (M), (O)(2)(a) to (O)(2)(d), (O)(3) to (O)(6), (P), (Q), (R), (T), (U), and (W) to (EE) of this rule shall apply to all sources regardless of date of construction or modification.

(2) The requirements of paragraphs (N) and (V) of this rule shall apply state-wide.

(3) For sources located in counties not listed in paragraph (A)(1) of this rule:

(a) The requirements of paragraphs (C) to (M), (O)(2)(a) to (O)(2)(d), (O)(3) to (O)(6), (P), (Q) and (R) of this rule shall apply to all sources:

(i) For which the construction or modification commenced on or after October 19, 1979; or

(ii) Which are located at a facility having the potential to emit a total of one hundred tons or more of VOC per calendar year.

(b) The requirements of paragraphs (T), (U), and (W) to (AA) of this rule shall apply to all sources:

(i) For which the construction or modification commenced on or after March 27, 1981; or

(ii) Which are located at a facility having the potential to emit a total of one hundred tons or more of VOC per calendar year.

(c) The requirements of paragraphs (BB) to (EE) of this rule shall apply to all sources:

(i) For which the construction or modification commenced on or after May 9, 1986; or

(ii) Which are located at a facility having the potential to emit a total of one hundred tons or more of VOC per calendar year.

(4) The requirements of paragraph (DDD) of this rule shall apply to all sources, regardless of date of construction or modification, that are located in Ashtabula, Butler, Clark, Clermont, Cuyahoga, Geauga, Greene, Hamilton, Lake, Lorain, Medina, Miami, Montgomery, Portage, Summit, or Warren county.

(5) The requirements of paragraph (O)(2)(e) of this rule shall apply to any facility that has sources regardless of date of construction or modification that are located in Ashtabula, Butler, Clark, Clermont, Cuyahoga, Geauga, Greene, Hamilton, Lake, Lorain, Medina, Miami, Montgomery, Portage, Summit, or Warren county.

(6) The requirements of paragraph (HH) of this rule shall apply to all coating lines for automotive/transportation plastic parts and/or for business machine plastic parts if the facility containing said coating lines meets all of the following criteria:

(a) The facility is located in Ashtabula, Cuyahoga, Geauga, Lake, Lorain, Medina, Portage, or Summit county; and

(b) The facility has a combined total potential to emit for VOC emissions equal to or greater than one hundred tons of VOC per calendar year on or after August 25, 2008 from all of the following:

(i) Surface coating of automotive/transportation plastic parts and/or business machine plastic parts;

(ii) All non-CTG sources; and

(iii) Unregulated emissions from CTG sources except sources regulated under Subparts BBB, III, NNN, and RRR of 40 CFR Part 60 and sources regulated under Subpart T of 40 CFR Part 63.

For the purpose of this paragraph, a source shall be considered regulated by a paragraph or rule if it is subject to the limits of that paragraph or rule. A source is not considered regulated by a paragraph or rule if it is not subject to the limits of that paragraph or rule. For example, if the source is covered by an exemption in the paragraph or rule, or the applicability criteria of the paragraph or rule are not met, then the source is not subject to that paragraph or rule. A source is also not considered regulated by a CTG if there is no rule contained in this chapter regulating the source category corresponding to that CTG.

(7) Additional requirements or requirements which are more stringent than those specified in this rule may be applicable to new sources pursuant to rule 3745-31-05 of the Administrative Code.

(B) General provisions.

(1) Except as otherwise provided by this rule, compliance with the limitations specified in paragraphs (C) to (K), (S), (U), (Y), (FF), (HH), (II), (OO), (PP) and (XX) of this rule is based upon a weighted average by volume of all coating materials employed in the coating line or printing line in any one day. The VOC contents and densities of the coating materials subject to paragraphs (C) to (K), (S), (U), (Y), (FF), (HH), (II), (OO), (PP) and (XX) of this rule shall be determined in accordance with paragraph (B) of rule 3745-21-10 of the Administrative Code. The VOC emission rate, capture efficiency and control efficiency for coating lines or printing lines subject to paragraphs (C) to (K), (S), (U), (Y), (FF), (HH), (NN), (PP), and (XX) of this rule shall be determined in accordance with paragraph (C) of rule 3745-21-10 of the Administrative Code. The averaging of VOC emissions over two or more coating lines and/or printing lines in order to demonstrate compliance with an applicable emission limitation (i.e., cross-line averaging) is prohibited except as otherwise provided in this rule.

(2) Any approval granted by the director in accordance with paragraphs (I)(2), (K)(3), (L)(1)(a)(ii), (O)(2)(c)(iii), (O)(3)(c)(v), (O)(4)(a)(iii), (T)(4), (W)(1)(a)(ii), (W)(1)(c)(ii), (Z)(1)(a)(vii), (Z)(1)(b)(ii)(e), (Z)(1)(b)(iii)(c), (DD)(3)(e), (DD)(16), and (DD)(17)(b)(iii) of this rule must be approved by the USEPA as a revision of the state implementation plan.

(3) Recordkeeping and reporting requirements for coating lines and printing lines.

(a) Except as otherwise provided by this rule, the owner or operator of a coating line or printing line subject to paragraphs (C) to (K), (S), (U), (Y), (FF), (HH), (II), (NN) to (PP), or (XX) of this rule, or subject to rule 3745-21-24 or 3745-21-26 of the Administrative Code shall demonstrate the ongoing status of compliance with the applicable emissions limitations and/or control requirements by means of one of the recordkeeping and reporting requirement alternatives specified in this paragraph.

(b) Any owner or operator of a coating line which is exempt from the emission limitations specified in paragraph (I) or (U) of this rule because the combined VOC emissions from all such coating lines at the facility are less than fifteen pounds of VOC per day (before add-on controls) shall collect and record the information each day and maintain the information at the facility for a period of three years:

(i) The name and identification number of each coating, as applied.

(ii) The mass of VOC per volume (excluding water and exempt solvents) and the volume of each coating (excluding water and exempt solvents), as applied, used each day.

(iii) The total VOC emissions at the facility, as calculated using the following equation:

$$T = \sum_{i=1}^{n} A_i B$$

where:

T = Total VOC emissions from the combined coating lines before the application of capture systems and control devices, in units of pounds per day;

n = Number of different coatings applied in the coating lines at the facility;

i = Subscript denoting an individual coating;

A_i = Mass of VOC per volume of coating (i) (excluding water and exempt solvents), as applied, used at the facility, in units of pounds VOC per gallon; and

B_i = Volume of coating (i) (excluding water and exempt solvents), as applied, used at the facility, in units of gallons per day. The instrument or method by which the owner or operator accurately measured or calculated the volume of each coating, as applied, shall also be described in the certification to the director.

(c) Any owner or operator of a coating line referenced in paragraph (B)(3)(b) of this rule shall notify the director of any daily record showing that the combined VOC emissions from all such coating lines at the facility are equal to or greater than fifteen pounds of VOC per day (before add-on controls). A copy of such record shall be sent to the director within forty-five days after the exceedance occurs.

(d) Any owner or operator of a coating line which is exempt from the emission limitations specified in paragraph (U)(1) of this rule, pursuant to paragraph (U)(2)(e) of this rule, shall collect and record the following information each day for each such coating line and maintain the information at the facility for a period of three years:

(i) The name and identification number of each coating employed in the coating line.

(ii) The volume, in gallons, of each coating employed in the coating line.

(iii) The total volume, in gallons, of all of the coatings employed in the coating line.

(e) Any owner or operator of a coating line referenced in paragraph (B)(3)(d) of this rule shall notify the director of any daily record showing that the coating line employs more than the applicable maximum daily coating usage limit. A copy of such record shall be sent to the director within forty-five days after the exceedance occurs.

(f) Any owner or operator of a coating line or printing line who elects to demonstrate the ongoing status of compliance with the applicable emission limitation by means of the use of complying coatings (i.e., each coating complies with the applicable emission limitation as applied) shall collect and record the following information each month and maintain the information at the facility for a period of three years:

(i) The name and identification number of each coating, as applied.

(ii) The mass of VOC per volume of each coating (excluding water and exempt solvents), as applied.

This information does not have to be kept on a line-by-line basis. Also, if an owner or operator mixes complying coatings at a coating line, it is not necessary to record the VOC content of the resulting mixture.

(g) Any owner or operator of a coating line or printing line referenced in paragraph (B)(3)(f) of this rule shall notify the director of any monthly record showing the use of noncomplying coatings. A copy of such record shall be sent to the director within thirty days following the end of the calendar month.

(h) Any owner or operator of a coating line or printing line who elects to demonstrate the ongoing status of compliance with the applicable emission limitation by means of a daily volume-weighted average VOC content shall collect and record the following information each day for the coating line or printing line and maintain the information at the facility for a period of three years:

(i) The name and identification number of each coating, as applied.

(ii) The mass of VOC per volume (excluding water and exempt solvents) and the volume of each coating (excluding water and exempt solvents), as applied.

(iii) The daily volume-weighted average VOC content of all coatings, as applied, calculated in accordance with the equation specified in paragraph (B)(9) of rule 3745-21-10 of the Administrative Code for $C_{voc,2}$.

(i) Any owner or operator of a coating line or printing line referenced in paragraph (B)(3)(h) of this rule shall notify the director of any daily record showing that the daily volume-weighted average VOC content exceeds the applicable emission limitation. A copy of such record shall be sent to the director within forty-five days after the exceedance occurs.

(j) Any owner or operator of a coating line who elects to demonstrate the ongoing status of compliance with the applicable pounds of VOC per gallon of solids limitation by means of control equipment shall collect and record the following information each day for the coating line and maintain the information at the facility for a period of three years:

(i) The name and identification number of each coating used.

(ii) The mass of VOC per unit volume of coating solids, as applied, the volume solids content, as applied, and the volume, as applied, of each coating.

(iii) The maximum VOC content (mass of VOC per unit volume of coating solids, as applied) or the daily volume-weighted average VOC content (mass of VOC per unit volume of coating solids, as applied) of all the coatings.

(iv) The calculated, controlled VOC emission rate, in mass of VOC per unit volume of coating solids, as applied. The controlled VOC emission rate shall be calculated using (a) either the maximum VOC content or the daily volume-weighted VOC content recorded in accordance with paragraph (B)(3)(j)(iii) of this rule and (b) the overall control efficiency for the control equipment as determined during the most recent emission test that demonstrated that the source was in compliance.

(v) A log or record of operating time for the capture (collection) system, control device, monitoring equipment, and the associated coating line.

(vi) For thermal incinerators, all three-hour periods of operation during which the average combustion temperature was more than fifty degrees Fahrenheit below the average combustion temperature during the most

recent performance test that demonstrated that the source was in compliance.

(vii) For catalytic incinerators, all three-hour periods of operation during which the average temperature of the process vent stream immediately before the catalyst bed is more than fifty degrees Fahrenheit below the average temperature of the process vent stream during the most recent performance test that demonstrated that the source was in compliance, and all three-hour periods of operation during which the average temperature difference across the catalyst bed is less than eighty per cent of the average temperature differences during the most recent performance test that demonstrated that the source was in compliance.

(viii) For carbon adsorbers, all three-hour periods of operation during which the average VOC concentration or reading of organics in the exhaust gases is more than twenty per cent greater than the average exhaust gas concentration or reading measured by the organics monitoring device during the most recent determination of the recovery efficiency of the carbon adsorber that demonstrated that the source was in compliance.

(k) Any owner or operator of a coating line referenced in paragraph (B)(3)(j) of this rule shall notify the director of any daily record showing that the calculated, controlled VOC emission rate exceeds the applicable pounds of VOC per gallon of solids limitation. A copy of such record shall be sent to the director within forty-five days after the exceedance occurs.

(l) Any owner or operator of a coating line or printing line who elects to demonstrate the ongoing status of compliance with the applicable capture and control efficiency requirements or overall control efficiency requirements contained in paragraph (B)(6), (H), (Y), (NN), (PP), or (XX) of this rule shall collect and record the following information each day for the control equipment and maintain the information at the facility for a period of three years:

(i) A log of operating time for the capture (collection) system, control device, monitoring equipment, and the associated coating line or printing line.

(ii) For thermal incinerators, all three-hour periods of operation during which the average combustion temperature was more than fifty degrees Fahrenheit below the average combustion temperature during the most recent performance test that demonstrated that the source was in compliance.

(iii) For catalytic incinerators, all three-hour periods of operation during which the average temperature of the process vent stream immediately

before the catalyst bed is more than fifty degrees Fahrenheit below the average temperature of the process vent stream during the most recent performance test that demonstrated that the source was in compliance, and all three-hour periods of operation during which the average temperature difference across the catalyst bed is less than eighty per cent of the average temperature difference during the most recent performance test that demonstrated that the source was in compliance.

(iv) For carbon adsorbers, all three-hour periods of operation during which the average VOC concentration or reading of organics in the exhaust gases is more than twenty per cent greater than the average exhaust gas concentration or reading measured by the organics monitoring device during the most recent determination of the recovery efficiency of the carbon adsorber that demonstrated that the source was in compliance.

(m) Any owner or operator of a coating line or printing line referenced in paragraphs (B)(3)(j) and (B)(3)(l) of this rule shall submit to the director quarterly summaries of the records required by paragraphs (B)(3)(j)(v) to (B)(3)(j)(viii) and (B)(3)(l)(i) to (B)(3)(l)(iv) of this rule. These quarterly reports shall be submitted by April thirtieth, July thirty-first, October thirty-first, and January thirty-first, and shall cover the records for the previous calendar quarters.

(n) Any owner or operator of a coating line or printing line referenced in paragraphs (B)(3)(j) and (B)(3)(l) of this rule shall install and operate continuous monitoring and recording devices (i.e., for temperature or VOC concentration) and, if necessary, perform emission tests for the coating line or printing line to enable the recordkeeping required by paragraphs (B)(3)(j)(vi) to (B)(3)(j)(viii) and (B)(3)(l)(ii) to (b)(3)(l)(iv) of this rule. The continuous monitoring and recording devices shall be installed and placed in operation either within one hundred eighty days of the March 31, 1993 or by the date of operation of any new control equipment installed for the coating line or printing line after March 31, 1993 to achieve compliance with the VOC control requirements of this rule. The continuous monitoring and recording devices shall be capable of accurately measuring the desired parameter, and the owner or operator shall properly operate and maintain the devices in accordance with the manufacturer's recommendations.

(4) Recordkeeping and reporting requirements for sources other than coating lines and printing lines.

(a) Except as otherwise provided by this rule, the owner or operator of a source other than a coating line or printing line that is subject to paragraphs (O), (W), (CC), (X), (EE), (KK) to (MM), (SS) to (VV), or (YY) to (BBB) of this rule shall demonstrate the ongoing status of compliance with the applicable emissions limitations and/or control requirements by means of

one of the recordkeeping and reporting requirement alternatives specified in this paragraph.

(b) Any owner or operator of a source referenced in paragraph (B)(4)(a) of this rule who elects to demonstrate the ongoing status of compliance with the applicable emission limitation or control requirement by means of control equipment shall collect and record the following information each day for the source and maintain the information at the facility for a period of three years:

(i) A log or record of operating time for the capture (collection) system, control device, monitoring equipment, and the associated source.

(ii) For thermal incinerators, all three-hour periods of operation during which the average combustion temperature was more than fifty degrees Fahrenheit below the average combustion temperature during the most recent performance test that demonstrated that the source was in compliance.

(iii) For catalytic incinerators, all three-hour periods of operation during which the average temperature of the process vent stream immediately before the catalyst bed is more than fifty degrees Fahrenheit below the average temperature of the process vent stream during the most recent performance test that demonstrated that the source was in compliance, and all three-hour periods of operation during which the average temperature difference across the catalyst bed is less than eighty per cent of the average temperature difference during the most recent performance test that demonstrated that the source was in compliance.

(iv) Where an absorber is the final control device and an organic monitoring device is used, all three-hour periods of operation during which the average concentration level or reading of organic compounds in the exhaust gases is more than twenty per cent greater than the exhaust gas organic compound concentration level or reading measured by the most recent performance test that demonstrated that the source was in compliance.

(v) Where an absorber is the final control device and an organic monitoring device is not used:

(a) All three-hour periods of operation during which the average absorbing liquid temperature was more than twenty degrees Fahrenheit above the average absorbing liquid temperature during the most recent performance test that demonstrated that the source was in compliance; or

(b) All three-hour periods of operation during which the average absorbing liquid specific gravity was more than 0.1 unit above, or more than 0.1 unit below the average absorbing liquid specific gravity during the most recent performance test that demonstrated that the source was in compliance (unless monitoring of an alternative parameter, which is a measure of the degree of absorbing liquid saturation, is approved by the director, in which case the director will define appropriate parameter boundaries and periods of operation during which they are exceeded).

(vi) Where a carbon absorber is the final control device and an organic monitoring device is used, all three-hour periods of operation during which the average concentration level or reading of organic compounds in the exhaust gases is more than twenty per cent greater than the exhaust gas organic compound concentration level or reading measured by the most recent performance test that demonstrated that the source was in compliance.

(vii) Where a carbon adsorber is the final control device and an organic monitoring device is not used:

(a) All carbon bed regeneration cycles during which the total mass steam flow rate was more than ten per cent below the total mass steam flow during the most recent performance test that demonstrated that the source was in compliance; or

(b) All carbon bed regeneration cycles during which the temperature of the carbon bed after regeneration (and after completion of any cooling cycle(s)) was more than ten per cent greater than the carbon bed temperature (in degrees Celsius) during the most recent performance test that demonstrated that the source was in compliance.

(viii) Where a condenser is the final control device and an organic monitoring device is used, all three-hour periods of operation during which the average concentration level or reading of organic compounds in the exhaust gases is more than twenty per cent greater than the exhaust gas organic compound concentration level or reading measured by the most recent performance test that demonstrated that the source was in compliance.

(ix) When a condenser is the final control device and an organic monitoring device is not used, all three-hour periods of operation during which the average exit (product side) condenser operating temperature was more than eleven degrees Fahrenheit above the average exit (product side)

operating temperature during the most recent performance test that demonstrated that the source was in compliance.

(x) For flares, all periods during which the electric arc ignition system or pilot flame is not functioning properly.

(c) Any owner or operator of a source referenced in paragraph (B)(4)(a) of this rule shall submit to the director quarterly summaries of the records required by paragraph (B)(4)(b) of this rule. These quarterly reports shall be submitted by April thirtieth, July thirty-first, October thirty-first, and January thirty-first, and shall cover the records for the previous calendar quarters.

(d) Any owner or operator of a source referenced in paragraph (B)(4)(a) of this rule shall install and operate continuous monitoring and recording devices (i.e., for temperature, VOC concentration, arcing of an electric arc ignition system, or presence of a pilot flame) and, if necessary, perform emission tests for the source to enable the recordkeeping required by paragraph (B)(4)(b) of this rule. The continuous monitoring and recording devices shall be installed and placed in operation either within one hundred eighty days of March 31, 1993 or by the date of operation of any new control equipment installed for the source after March 31, 1993 to achieve compliance with the VOC control requirements of this rule. The continuous monitoring and recording devices shall be capable of accurately measuring the desired parameter, and the owner or operator shall properly operate and maintain the devices in accordance with the manufacturer's recommendations.

(5) Any owner or operator of a coating line, printing line, or other source that is subject to the recordkeeping and reporting requirements contained in paragraph (B)(3) or (B)(4) of this rule may propose to the director an alternative recordkeeping and reporting program. If the alternative recordkeeping and reporting program is approved by the director, it shall supersede the requirements of paragraph (B)(3) or (B)(4) of this rule and shall be specified in the terms and conditions of the permit, variance, or order issued by the director for the coating line, printing line, or other source. Any alternative recordkeeping and reporting program approved by the director also must be approved by the USEPA as a revision to the state implementation plan.

(6) In lieu of complying with the pounds of VOC per gallon of solids limitations contained in paragraphs (D), (E), (F)(1), (G), (I)(1), (J), (K)(1), (U), and (HH) of this rule, any owner or operator of a coating line that employs a control system may choose to demonstrate that the capture and control equipment provide not less than an eighty one per cent reduction, by weight, in the overall VOC emissions from the coating line and that the control equipment has an efficiency of not less than ninety per cent, by weight, for the VOC emissions vented to the

control equipment. In such cases, the owner or operator shall comply with the certification and permit application requirements specified in paragraph (B)(3) of rule 3745-21-04 of the Administrative Code and shall achieve compliance with the overall VOC emission reduction and control efficiency requirements in accordance with the applicable compliance schedules contained in paragraph (C) of rule 3745-21-04 of the Administrative Code. Also, in such cases, the owner or operator of the coating line shall be subject to the recordkeeping and reporting requirements contained in paragraph (B)(3)(l) of this rule.

(7) In lieu of complying with the pounds of VOC per gallon of solids limitations contained in paragraphs (I)(4) and (K)(6) of this rule, any owner or operator of a coating line that employs a control system may choose to demonstrate that the capture and control equipment provide not less than a ninety per cent reduction, by weight, in the overall VOC emissions from the coating line and that the control equipment has an efficiency of not less than ninety per cent, by weight, for the VOC emissions vented to the control equipment. In such cases, the owner or operator shall comply with the certification and permit application requirements specified in paragraph (B)(3)(b) of rule 3745-21-04 of the Administrative Code and shall achieve compliance with the overall VOC emission reduction and control efficiency requirements in accordance with the applicable compliance schedules contained in paragraph (C) of rule 3745-21-04 of the Administrative Code. Also, in such cases, the owner or operator of the coating line shall be subject to the recordkeeping and reporting requirements contained in paragraph (B)(3)(l) of this rule.

(C) Surface coating of automobiles and light-duty trucks.

For any source located in Ashtabula, Cuyahoga, Geauga, Lake, Lorain, Medina, Portage, or Summit county subject to paragraph (C) of this rule, the requirement to comply with paragraph (C) of this rule shall terminate at such time the source becomes subject to and complies with rule 3745-21-29 of the Administrative Code.

(1) Except as otherwise provided in paragraphs (C)(2), (C)(3) and (C)(6) of this rule, no owner or operator of an automobile or light-duty truck assembly plant may cause, allow or permit the discharge into the ambient air of any VOC after the dates specified in rule 3745-21-04 of the Administrative Code in excess of the following:

(a) For a prime coat coating line employing electrodeposition,

(i) 1.2 pounds of VOC per gallon of coating, excluding water and exempt solvents, or, if a control system is employed, 1.4 pounds of VOC per gallon of solids from the electrodeposition coating line; or

(ii) 1.4 pounds of VOC per gallon of solids from any electrodeposition (EDP) coating line when the solids turnover ratio (R_T) is 0.16 or greater. R_T shall be calculated as follows:

$$R_T = \frac{T_E}{L_E}$$

where:

T_V = total volume of coating solids that is added to the EDP coating line in a calendar month (gallons).

L_E = volume design capacity of the EDP system, which is the total liquid volume contained in the EDP system's tanks, pumps, recirculating lines, filters, etc. at the system's designed liquid operating level (gallons); or

(iii) 1.4 ï¿½ $350^{(0.160-R_T)}$ pounds of VOC per gallon of solids from any EDP coating line when R_T, calculated according to the equation in paragraph (C)(1)(a)(ii) of this rule, is greater than or equal to 0.040 and less than 0.160; or

(iv) When R_T, calculated according to the equation in paragraph (C)(1)(a)(ii) of this rule, is less than 0.040 for any EDP coating line, there is no emission limit; and

(v) 2.8 pounds of VOC per gallon of coating, excluding water and exempt solvents, or 15.1 pounds VOC per gallon of deposited solids from the guidecoat or surfacer coating line. (Antichip coatings applied to automobile and light-duty truck components such as rocker panels, the bottom edges of doors and fenders, and the leading edge of the roof, are considered to be guidecoat or surfacer coatings.)

(b) For a prime coat coating line not employing electrodeposition, 1.9 pounds of VOC per gallon of coating, excluding water and exempt solvents, or, if a control system is employed, 2.6 pounds of VOC per gallon of solids.

(c) For a topcoat coating line, 2.8 pounds of VOC per gallon of coating, excluding water and exempt solvents, or 15.1 pounds VOC per gallon of deposited solids.

(d) For a final repair coating line, 4.8 pounds of VOC per gallon of coating, excluding water and exempt solvents, or, if a control system is employed, 13.8 pounds of VOC per gallon of solids.

(2) The emission limitations specified in paragraph (C)(1) of this rule shall apply to the application of surface coatings, except sound-proofing materials, to the frame, main body, interior panels and exterior sheet metal such as the hood, trunk lid, fenders, cargo boxes, doors and grill openings of an automobile or light-duty truck and to other parts that are coated along with these bodies or body parts. The emission limitation specified in paragraph (C)(1)(c) of this rule is a daily volume-weighted average of the entire topcoat operation (i.e., all spray booths, flash-off areas and bake ovens where topcoat coatings are applied, dried, and cured, except those spray booths, flash-off areas and bake ovens in the final repair coating line). The emission limitation specified in paragraph (C)(1)(a)(v) of this rule is a daily volume-weighted average of the entire guidecoat and surfacer operation (i.e., all spray booths, flash-off areas and bake ovens where guidecoat and surfacer coatings are applied, dried, and cured, except those spray booths, flash-off areas and bake ovens in the final repair topcoat coating line).

(3) When an owner or operator of an automobile or light-duty truck assembly plant chooses to comply with the pounds VOC per gallon of deposited solids limitation specified in paragraphs (C)(1)(a)(v) and (C)(1)(c) of this rule, the test method for determining the transfer efficiency of the coating line and for determining compliance of the coating line with applicable emission limitations shall be in accordance with the publication specified in paragraph (C)(4) of this rule.

(4) As expeditiously as practicable but not later than December 1, 1990 for any topcoat coating line and not later than July 1, 1995 for any guidecoat or surfacer coating line, any owner or operator of an automobile or light-duty truck assembly plant shall maintain daily records for the guidecoat or surfacer coating line and for the topcoat coating line and shall demonstrate compliance with paragraphs (C)(1)(a)(v) and (C)(1)(c) of this rule in accordance with the USEPA publication entitled "Protocol for Determining the Daily Volatile Organic Compound Emission Rate of Automobile and Light-Duty Truck Topcoat Operations". A copy of records indicating an exceedance of paragraphs (C)(1)(a)(v) and (C)(1)(c) of this rule limitations shall be sent to the director within thirty days following the end of the calendar month. These recordkeeping and reporting requirements are in lieu of those contained in paragraph (B)(3) of this rule.

(5) Compliance with the limitation specified in paragraph (C)(1)(d) of this rule is based upon a weighted average by volume of all coating materials employed in the final repair coating line in any one month. Any owner or operator of a final repair coating line who elects to demonstrate the ongoing status of compliance by means of a monthly volume-weighted average VOC content shall meet the following recordkeeping and reporting requirements:

(a) Recordkeeping.

The owner or operator shall collect and record the following information each month for the final repair coating line and maintain the information at the facility for a period of three years:

(i) The name and identification number of each coating, as applied.

(ii) The mass of VOC per volume (excluding water and exempt solvents) and the volume of each coating (excluding water and exempt solvents), as applied.

(iii) The monthly volume-weighted average VOC content of all coatings, as applied, calculated in accordance with the equation specified in paragraph (B)(9) of rule 3745-21-10 of the Administrative Code for $(C_{VOC,2})_A$.

(b) Reporting.

The owner or operator shall notify the director of any monthly record showing that the monthly volume-weighted average VOC content exceeds the applicable emission limitation. A copy of such monthly record shall be sent to the director within thirty days following the end of the calendar month.

(6) An owner or operator of an automobile or light-duty truck assembly plant may choose to comply with the following requirements in lieu of those in paragraphs (C)(1)(a) to (C)(1)(d) of this rule if the maximum number of motor vehicles assembled is less than thirty-five per day:

No owner or operator of an automobile or light-duty truck assembly plant may cause, allow, or permit the discharge into the ambient air of any VOC in excess of the following:

(a) 5.0 pounds of VOC per gallon of coating, excluding water and exempt solvents, for guidecoats, automotive primer-sealers and automotive primer-surfacers, or, if a control system is employed, 15.6 pounds of VOC per gallon of solids, as applied.

(b) 5.4 pounds of VOC per gallon of coating, excluding water and exempt solvents, for automotive topcoats or, if a control system is employed, 20.3 pounds VOC per gallon of solids, as applied.

(7) An owner or operator of the applicable coating line who elects to demonstrate the ongoing status of compliance with paragraph (C)(6) by means of a monthly volume-weighted average VOC content shall meet the following recordkeeping and reporting requirements:

(a) Recordkeeping.

The owner or operator shall collect and record the following information each month for the coating line and maintain the information at the facility for a period of three years:

(i) The name and identification number of each coating, as applied.

(ii) The mass of VOC per volume (excluding water and exempt solvents) and the volume of each coating (excluding water and exempt solvents), as applied.

(iii) The monthly volume-weighted average VOC content of all coatings, as applied, calculated in accordance with the equation specified in paragraph (B)(9) of rule 3745-21-10 of the Administrative Code for $(C_{voc,2})_A$.

(b) Reporting.

The owner or operator shall notify the director of any monthly record showing that the monthly volume-weighted average VOC content exceeds the applicable emission limitation. A copy of such monthly record shall be sent to the director within thirty days following the end of the calendar month.

(8) Any owner or operator of a coating line who elects to demonstrate the ongoing status of compliance with the applicable pounds of VOC per gallon of solids limitation as specified in paragraph (C)(1)(d), (C)(6)(a), or (C)(6)(b) of this rule by means of control equipment shall collect and record the following information each month for the coating line and maintain the information at the facility for a period of three years:

(a) The name and identification number of each coating used.

(b) The mass of VOC per unit volume of coating solids, as applied, the volume solids content, as applied, and the volume, as applied, of each coating.

(c) The maximum VOC content (mass of VOC per unit volume of coating solids, as applied) or the monthly volume-weighted average VOC content (mass of VOC per unit volume of coating solids, as applied) of all the coatings.

(d) The calculated, controlled VOC emission rate, in mass of VOC per unit volume of coating solids, as applied. The controlled VOC emission rate shall be calculated using the following.

(i) Either the maximum VOC content or the monthly volume-weighted VOC content recorded in accordance with paragraph (B)(3)(j)(iii) of this rule.

(ii) The overall control efficiency for the control equipment as determined during the most recent emission test that demonstrated that the source was in compliance.

(e) A log or record of operating time for the capture (collection) system, control device, monitoring equipment, and the associated coating line.

(f) For thermal incinerators, all three-hour periods of operation during which the average combustion temperature was more than fifty degrees Fahrenheit below the average combustion temperature during the most recent performance test that demonstrated that the source was in compliance.

(g) For catalytic incinerators, all three-hour periods of operation during which the average temperature of the process vent stream immediately before the catalyst bed is more than fifty degrees Fahrenheit below the average temperature of the process vent stream during the most recent performance test that demonstrated that the source was in compliance, and all three-hour periods of operation during which the average temperature difference across the catalyst bed is less than eighty per cent of the average temperature differences during the most recent performance test that demonstrated that the source was in compliance.

(h) For carbon adsorbers, all three-hour periods of operation during which the average VOC concentration or reading of organics in the exhaust gases is more than twenty per cent greater than the average exhaust gas concentration or reading measured by the organics monitoring device during the most recent determination of the recovery efficiency of the carbon adsorber that demonstrated that the source was in compliance.

(9) Any owner or operator of a coating line referenced in paragraph (C)(7) of this rule shall notify the director of any monthly record showing that the calculated, controlled VOC emission rate exceeds the applicable pounds of VOC per gallon of solids limitation. A copy of such monthly record shall be sent to the director within thirty days following the end of the calendar month.

(D) Surface coating of cans.

(1) Except as otherwise provided in paragraph (B)(6) of this rule, no owner or operator of a two-piece can coating operation may cause, allow, or permit the discharge into the ambient air of any volatile organic compounds after the date specified in paragraph (C)(3) of rule 3745-21-04 of the Administrative Code in excess of the following:

(a) 2.8 pounds of VOC per gallon of coating, excluding water and exempt solvents, or, if a control system is employed, 4.5 pounds of VOC per gallon of solids from a basecoat coating line;

(b) 2.8 pounds of VOC per gallon of coating, excluding water and exempt solvents, or, if a control system is employed, 4.5 pounds of VOC per gallon of solids from an overvarnish coating line;

(c) 4.2 pounds of VOC per gallon of coating, excluding water and exempt solvents, or, if a control system is employed, 9.8 pounds of VOC per gallon of solids from an interior body coating line;

(d) 4.2 pounds of VOC per gallon of coating, excluding water and exempt solvents, or, if a control system is employed, 9.8 pounds of VOC per gallon of solids from an exterior bottom end coating line; and

(e) 3.7 pounds of VOC per gallon of coating, excluding water and exempt solvents, or, if a control system is employed, 7.4 pounds of VOC per gallon of solids from an end sealing compound coating line.

(2) Except as otherwise provided in paragraph (B)(6) of this rule, no owner or operator of a three-piece can coating operation may cause, allow, or permit the discharge into the ambient air of any volatile organic compounds after the date specified in paragraph (C)(3) of rule 3745-21-04 of the Administrative Code in excess of the following:

(a) 2.8 pounds of VOC per gallon of coating, excluding water and exempt solvents, or, if a control system is employed, 4.5 pounds of VOC per gallon of solids from a basecoat coating line;

(b) 2.8 pounds of VOC per gallon of coating, excluding water and exempt solvents, or, if a control system is employed, 4.5 pounds of VOC per gallon of solids from an overvarnish coating line;

(c) 4.2 pounds of VOC per gallon of coating, excluding water and exempt solvents, or, if a control system is employed, 9.8 pounds of VOC per gallon of solids from an interior body coating line;

(d) 5.5 pounds of VOC per gallon of coating, excluding water and exempt solvents, or, if a control system is employed, 21.7 pounds of VOC per gallon of solids from a side-seam coating line; and

(e) 3.7 pounds of VOC per gallon of coating, excluding water and exempt solvents, or, if a control system is employed, 7.4 pounds of VOC per gallon of solids from an end sealing compound coating line.

(3) Alternative daily emission limitation:

(a) Any owner or operator of a two-piece or three-piece can coating operation may obtain from the director an alternative daily emission limitation for the emission limitations specified in paragraph (D)(1) or (D)(2) of this rule. The alternative daily emission limitation shall be determined according to paragraph (D)(3)(b) of this rule and the actual daily emission shall be determined according to paragraph (D)(3)(c) of this rule. Prior to obtaining the alternative daily emission limitation, the owner or operator shall demonstrate to the satisfaction of the director that the actual daily emission will not exceed the alternative daily emission limitation after the date specified in paragraph (C)(3) of rule 3745-21-04 of the Administrative Code and that the record-keeping requirements of paragraph (D)(3)(d) of this rule shall be met.

(b) The alternative daily emission limitation (A_d) shall be determined on a daily basis as follows:

$$A_d = \sum_{i=1}^{n} V_i L_i \frac{(D_i - C_i)}{(D_i - L_i)}$$

Where A_d = pounds of VOC emissions allowed for the day,

C = VOC content of surface coating employed, in pounds of VOC per gallon of coating, excluding water and exempt solvents,

D = density of VOC content of surface coating employed, in pounds of VOC per gallon of VOC (a standard density of 7.36 may be used if it is used for all surface coatings employed),

V = volume of surface coating employed for the day, in gallons (excluding water and exempt solvents),

L = emission limitation for the surface coating employed as specified in paragraph (D)(1) or (D)(2) of this rule, in pounds of VOC per gallon of coating (excluding water and exempt solvents),

i = subscript denoting a specific surface coating employed, and

n = total number of surface coatings employed in can coating operation.

(c) The actual daily emission (E_d) shall be determined on a daily basis as follows:

$$E_d = \sum_{i=1}^{n} V_i C_i (1 - F_i)$$

Where E_d = actual pounds of VOC emissions for the day,

F = fraction by weight of VOC emissions from the surface coating reduced or prevented from being emitted by control equipment, and V, C, i and n are defined as in paragraph (D)(3)(b) of this rule.

(d) Record-keeping requirements:

(i) Daily records shall be maintained for a period of not less than two years which list the usage of surface coatings or which list other data, as authorized by the director, that approximate the usage of surface coatings. The following data shall be listed for each surface coating being recorded: VOC content (in pounds of VOC per gallon of coating, excluding water and exempt solvents), density of VOC content of coating (in pounds of VOC per gallon of VOC) unless the standard density of 7.36 is recorded, and the type of surface coating according to the classification contained within paragraphs (D)(1) and (D)(2) of this rule.

(ii) Daily records shall be maintained for a period of not less than two years which include the following for any control equipment designed to reduce or prevent the emission of VOC: downtime, any operational problems and/or malfunctions which reduce the effective control efficiency, and the average control efficiency, if less than the normally expected control efficiency.

(iii) Other records shall be maintained, as deemed necessary by the director, in order to provide information on VOC emissions and/or compliance with the alternative daily emission limitation.

(E) Except as otherwise provided in paragraphs (B)(6) and (D) of this rule, no owner or operator of a coil coating line may cause, allow or permit the discharge into the ambient air of any VOCs after the date specified in paragraph (C)(4) of rule 3745-21-04 of the Administrative Code in excess of 2.6 pounds of VOC per gallon of coating, excluding water and exempt solvents, or, if a control system is employed, 4.0 pounds of VOC per gallon of solids from a prime coat, topcoat, or single coat coating line.

(F) Paper coating lines.

(1) Except as otherwise provided in paragraph (B)(6) of this rule, no owner or operator of a paper coating line which has a maximum application of coating materials greater than three gallons in any one day may cause, allow or permit the discharge into the ambient air of any volatile organic compounds after the date specified in paragraph (C)(5) of rule 3745-21-04 of the Administrative Code in excess of 2.9 pounds of VOC per gallon of coating, excluding water and exempt solvents, or, if a control system is employed, 4.8 pounds of VOC per gallon of solids from such paper coating line.

(2) In addition to the requirements specified in paragraph (F)(1) of this rule, the following requirements are applicable to all paper coating lines located in Ashtabula, Cuyahoga, Geauga, Lake, Lorain, Medina, Portage, and Summit counties.

(a) Any owner or operator of a paper coating line with potential emissions that are equal to or greater than 25.0 tons per year of VOC before the application of capture and control devices shall comply with either of the following requirements for the coating line:

(i) Employ a control system in order to reduce VOC emissions from the paper coating line by at least ninety per cent or maintain a maximum VOC outlet concentration of twenty ppmv on a dry basis, whichever is less stringent.

(ii) Employ coatings in the paper coating line that comply with the following VOC content limitations:

-VOC content limitations-

Coating Type	Pound of VOC/Pound of Coating
pressure surface coatings (not including pressure sensitive tape and labels)	0.08
pressure sensitive tape and label surface coatings	0.067

(b) Work practice standards for cleaning materials.

Unless emissions to the atmosphere are controlled by an approved emission control system with an overall control efficiency of at least ninety per cent, any person using an organic solvent for cleanup shall:

(i) Store all VOC containing cleaning materials and used shop towels in closed containers;

(ii) Ensure that mixing and storage containers used for VOC-containing cleaning materials are kept closed at all times except when depositing or removing these materials;

(iii) Minimize spills of VOC-containing cleaning materials;

(iv) Convey VOC-containing cleaning materials from one location to another in closed containers or pipes; and

(v) Minimize VOC emission from cleaning of storage, mixing, and conveying equipment.

(G) Except as otherwise provided in paragraph (B)(6) of this rule, no owner or operator of a fabric coating line may cause, allow or permit the discharge into the ambient air of any VOCs after the date specified in paragraph (C)(6) of rule 3745-21-04 of the Administrative Code in excess of 2.9 pounds of VOC per gallon of coating, excluding water and exempt solvents, or, if a control system is employed, 4.8 pounds of VOC per gallon of solids from a fabric coating line.

(H) Except as otherwise provided in paragraph (XX) of this rule, no owner or operator of a vinyl coating line may cause, allow or permit the discharge into the ambient air of any VOCs from such coating line after the date specified in paragraph (C)(7) of rule 3745-21-04 of the Administrative Code, unless the requirements of either paragraph (H)(1) or (H)(2) of this rule are satisfied.

(1) The VOC content of the coatings employed in the vinyl coating line, as determined under paragraph (B) of rule 3745-21-10 of the Administrative Code, does not exceed the following limitation:

(a) 4.8 pounds of VOC per gallon of vinyl coating, excluding water and exempt solvents; or

(b) Twenty-five per cent VOC by volume of the volatile matter of the vinyl coating.

(2) The vinyl coating line is equipped with a capture system and associated control system which are designed and operated to achieve the following efficiencies for VOCs, as determined under paragraph (C) of rule 3745-21-10 of the Administrative Code:

(a) A capture efficiency which is at least seventy-five per cent by weight; and

(b) A control efficiency which is at least ninety per cent by weight.

(3) The requirements specified in paragraphs (H)(1) and (H)(2) of this rule shall not apply to the application of organisol or plastisol coatings.

(I) Surface coating of metal furniture.

(1) Except as otherwise provided in paragraphs (B)(6), (I)(2) and (I)(3) of this rule, no owner or operator of a prime coat, topcoat, or single coat coating line for metal furniture may cause, allow or permit the discharge into the ambient air of any VOCs after the date specified in paragraph (C)(8) of rule 3745-21-04 of the Administrative Code in excess of 3.0 pounds of VOC per gallon of coating, excluding water and exempt solvents, or, if a control system is employed, 5.1 pounds of VOC per gallon of solids from such prime coat, topcoat, or single coat coating line.

(2) Any owner or operator of a prime coat, topcoat, or single coat coating line for metal furniture may obtain from the director an alternative emission limitation for the limitation specified in paragraph (I)(1) of this rule. The owner or operator shall demonstrate to the satisfaction of the director, prior to obtaining an alternative emission limitation, that the alternative emission limitation is, at a minimum, equivalent in terms of total daily emissions of VOCs to the applicable requirement of paragraph (I)(1) of this rule. For purposes of this demonstration, the director shall recognize that the emission limitation in paragraph (I)(1) of this rule is equivalent to 8.4 pounds VOC per gallon of deposited solids and is based upon a coating applicator transfer efficiency of sixty per cent. If the director approves an alternative emission limitation for a prime coat, topcoat, or single coat coating line for metal furniture, said limitation and the associated transfer efficiency shall be specified in the special terms and conditions of a operating permit or variance issued by the director for the coating line. If the test method for determining the transfer efficiency for a coating line has not been approved by the USEPA as part of the state implementation plan, the permit to operate or variance issued by the director for the coating line must be approved by the USEPA as a revision to the state implementation plan.

(3) Exemptions.

(a) Exempted from the requirements of paragraph (I)(1) of this rule are the prime coat, topcoat, or single coat coating lines for metal furniture at a facility, only if all such lines, in combination, emit less than fifteen pounds of VOC per day (before add-on controls).

(b) Exempted from the requirements of paragraph (I)(1) of this rule is any application of a coating to a part not defined as metal furniture.

(4) In addition to the requirements specified in paragraph (I)(1) of this rule the following requirements are applicable to all metal furniture coating lines located in Ashtabula, Cuyahoga, Geauga, Lake, Lorain, Medina, Portage, and Summit counties.

(a) Except as otherwise provided in paragraph (I)(4)(b) of this rule, no owner or operator of a coating line for metal furniture may cause, allow or permit the discharge into the ambient air of any VOCs after the date specified in

paragraph (C)(8) of rule 3745-21-04 of the Administrative Code in excess of the VOC limitations specified in the following table:

-VOC content (pound per gallon of coating, less water and exempt solvents)-

Coating	Air-Dried Coating (controls not employed)	Baked Coating (controls not employed)
general one-component	2.3	2.3
general multi-component	2.8	2.3
solar-absorbent	3.5	3.0
heat-resistant	3.5	3.0
extreme high-gloss	2.8	3.0
metallic	3.5	3.5
extreme performance	3.5	3.0
pretreatment coatings	3.5	3.5

The recommended emission limits can also be expressed in terms of mass of VOC per volume of coating solids, as applied. A facility could use low-VOC coatings or a combination of coatings and add-on control equipment on a coating unit to meet the recommended mass of VOC per volume of coating solids limits. Using an assumed VOC density of 7.36 pounds per gallon, the equivalent limits in terms of mass of VOC per volume of solids, as applied, are as follows:

-VOC content (pound per gallon of coating solids, as applied)-

Coating	Air-Dried Coating (controls employed)	Baked Coating (controls employed)
general one-component	3.3	3.3
general multi-component	4.5	3.3
extreme high gloss	4.5	5.1
extreme performance	6.7	5.1
heat resistant	6.7	5.1
metallic	6.7	6.7
pretreatment coatings	6.7	6.7
solar absorbent	6.7	5.1

(b) Exemptions.

(i) Exempted from the requirements of paragraph (I)(4) of this rule are the coating lines for metal furniture at a facility, only if all such lines, in combination, emit less than fifteen pounds of VOC per day (before add-on controls).

(ii) Exempted from the requirements of paragraph (I)(4) of this rule is any application of coating to a part not defined as metal furniture.

(iii) The provisions of paragraphs (I)(4)(a) and (I)(4)(d) of this rule shall not apply to:

(a) Stencil coatings;

(b) Safety-indicating coatings;

(c) Solid-film lubricants;

(d) Touch-up and repair coatings; and

(e) Coating application utilizing hand-held aerosol cans.

(c) Operating equipment.

A person shall not apply VOC-containing coatings to metal furniture unless the coating is applied with equipment operated according to the equipment manufacturer specifications, and by the use of one of the following methods:

(i) Electrostatic application;

(ii) Flow coat;

(iii) Dip coat;

(iv) Roll coat;

(v) HVLP spray;

(vi) Hand application methods; or

(vii) Such other coating application methods as are demonstrated to the director to be capable of achieving a transfer efficiency equivalent or better to the method listed in paragraph (I)(4)(c)(v) of this rule and for which written approval of the director has been obtained.

(d) Work practices for coating-related activities.

Unless emissions to the atmosphere are controlled by an approved emission control system with an overall control efficiency of at least ninety per cent, any person performing coating related activities shall:

(i) Store all VOC-containing coatings, thinners, and coating-related waste materials in closed containers;

(ii) Ensure that mixing and storage containers used for VOC-containing coatings, thinners, and coating-related waste materials are kept closed at all times except when depositing or removing these materials;

(iii) Minimize spills of VOC-containing coatings, thinners, and coating-related waste materials; and

(iv) Convey VOC-containing coatings, thinners, and coating-related waste materials from one location to another in closed containers or pipes.

(e) Work practice standards for cleaning materials.

Unless emissions to the atmosphere are controlled by an approved emission control system with an overall control efficiency of at least ninety per cent, any person using an organic solvent for cleanup shall:

(i) Store all VOC containing cleaning materials and used shop towels in closed containers;

(ii) Ensure that mixing and storage containers used for VOC-containing cleaning materials are kept closed at all times except when depositing or removing these materials;

(iii) Minimize spills of VOC-containing cleaning materials;

(iv) Convey VOC-containing cleaning materials from one location to another in closed containers or pipes; and

(v) Minimize VOC emission from cleaning of storage, mixing, and conveying equipment.

(J) Except as otherwise provided in paragraph (B)(6) of this rule, no owner or operator of a magnet wire coating line may cause, allow or permit the discharge into the ambient air of any VOCs after the date specified in paragraph (C)(9) of rule 3745-21-04 of the Administrative Code in excess of 1.7 pounds of VOC per gallon of coating, excluding water and exempt solvents, or, if a control system is employed, 2.2 pounds of VOC per gallon of solids from a magnet wire coating line.

(K) Surface coating of large appliances.

(1) Except as otherwise provided in paragraphs (B)(6), and (K)(2) to (K)(4) of this rule, no owner or operator of a prime coat, single coat or topcoat coating line for large appliances may cause, allow or permit the discharge into the ambient air of any VOCs after the date specified in paragraph (C)(10) of rule 3745-21-04 of the Administrative Code in excess of 2.8 pounds of VOC per gallon of coating, excluding water and exempt solvents, or, if a control system is employed, 4.5

pounds of VOC per gallon of solids from such prime coat, single coat, or topcoat coating line.

(2) The emission limit under paragraph (K)(1) of this rule shall not apply to the use of quick-drying lacquers for repair of scratches and nicks that occur during assembly, provided that the maximum usage of such lacquers does not exceed one quart in any eight-hour period.

(3) Any owner or operator of a prime coat, single coat or topcoat coating line for large appliances may obtain from the director an alternative emission limitation for the limitation specified in paragraph (K)(1) of this rule. The owner or operator shall demonstrate to the satisfaction of the director, prior to obtaining an alternative emission limitation, that the alternative emission limitation is, at a minimum, equivalent in terms of total daily emissions of VOCs to the applicable requirement of paragraph (K)(1) of this rule. For purposes of this demonstration, the director shall recognize that the emission limitation in paragraph (K)(1) of this rule is equivalent to 7.5 pounds VOC per gallon of deposited solids and is based upon a coating applicator transfer efficiency of sixty per cent. If the director approves an alternative emission limitation for a prime coat, single coat or topcoat coating line for large appliances, said limitation and the associated transfer efficiency shall be specified in the special terms and conditions of an operating permit or variance issued by the director for the coating line. If the test method for determining the transfer efficiency for a coating line has not been approved by the USEPA as part of the state implementation plan, the permit to operate or variance issued by the director for the coating line must be approved by the USEPA as a revision to the state implementation plan.

(4) The emission limit under paragraph (K)(1) of this rule shall not apply to any large appliance coating line for which construction commenced prior to October 19, 1979 and which is located at the following facilities, unless a modification for any such coating line has commenced on or after October 19, 1979:

(a) The "Whirlpool Corporation (Findlay Division)" facility located at 4901 North Main street, Findlay, Ohio; and

(b) The "Whirlpool Corporation (Marion Division)" facility located at 1300 Marion-Agosta road, Marion, Ohio.

(5) The emission limit under paragraph (K)(1) of this rule shall not apply to large appliance coatings that are subject to in-use temperatures in excess of two hundred fifty degrees Fahrenheit.

(6) In addition to the requirements specified in paragraph (K)(1) of this rule the following requirements are applicable to all surface coatings operations for large appliances located in Ashtabula, Cuyahoga, Geauga, Lake, Lorain, Medina, Portage and Summit counties.

(a) Except as otherwise provided in paragraph (K)(6)(b) of this rule, no owner or operator of a coating line for large appliances may cause, allow or permit the discharge into the ambient air of any VOCs after the date specified in paragraph (C)(10) of rule 3745-21-04 of the Administrative Code in excess of the VOC limitations specified in the following table.

-VOC content emission limitations (pounds per gallon of coating, less water and exempt solvents)-

Coating Type	Air-Dried (controls not employed)	Baked Coating (controls not employed)
general one-component	2.3	2.3
general multi-component	2.8	2.3
solar-absorbent	3.5	3.0
heat-resistant	3.5	3.0
extreme high-gloss	2.8	3.0
metallic	3.5	3.5
extreme performance	3.5	3.0
pretreatment coatings	3.5	3.5

The recommended emission limits can also be expressed in terms of mass of VOC per volume of coating solids, as applied. A facility could use low-VOC coatings or a combination of coatings and add-on control equipment on a coating unit to meet the recommended mass of VOC per volume of coating solids limits. Using an assumed VOC density of 7.36 pounds per gallon, the equivalent limits in terms of mass of VOC per volume of solids, as applied, are as follows:

-VOC content (pounds per gallon of coating solids, as applied)-

Coating	Air-Dried Coating (controls employed)	Baked Coating (controls employed)
general one-component	3.3	3.3
general multi-component	4.5	3.3
extreme high gloss	4.5	5.1
extreme performance	6.7	5.1
heat resistant	6.7	5.1
metallic	6.7	6.7
pretreatment coatings	6.7	6.7
solar absorbent	6.7	5.1

(b) Exemptions.

(i) Exempted from the requirements of paragraph (K)(6) of this rule are coating lines for large appliances at a facility, only if all such lines, in

combination, emit less than fifteen pounds of VOC per day (before add-on controls).

(ii) The provisions of paragraphs (K)(6)(a) and (K)(6)(e) of this rule shall not apply to:

(a) Stencil coatings;

(b) Safety-indicating coatings;

(c) Solid-film lubricants;

(d) Electric-insulating and thermal-conducting coatings;

(e) Touch-up and repair coatings; and

(f) Coating application utilizing hand-held aerosol cans.

(c) Operating equipment.

A person shall not apply VOC-containing coatings to a large appliance unless the coating is applied with equipment operated according to the equipment manufacturer specifications, and by the use of one of the following methods:

(i) Electrostatic application;

(ii) Flow coat;

(iii) Dip coat;

(iv) Roll coat;

(v) HVLP spray;

(vi) Hand application methods; or

(vii) Such other coating application methods as are demonstrated to the director to be capable of achieving a transfer efficiency equivalent or better to the method listed in paragraph (K)(6)(c)(v) of this rule and for which written approval of the director has been obtained.

(d) Work practices for coating-related activities.

Unless emissions to the atmosphere are controlled by an approved emission control system with an overall control efficiency of at least ninety per cent, any person performing coating related activities shall:

(i) Store all VOC-containing coatings, thinners, and coating-related waste materials in closed containers;

(ii) Ensure that mixing and storage containers used for VOC-containing coatings, thinners, and coating-related waste materials are kept closed at all times except when depositing or removing these materials;

(iii) Minimize spills of VOC-containing coatings, thinners, and coating-related waste materials; and

(iv) Convey VOC-containing coatings, thinners, and coating-related waste materials from one location to another in closed containers or pipes.

(e) Work practice standards for cleaning materials.

Unless emissions to the atmosphere are controlled by an approved emission control system with an overall control efficiency of at least ninety per cent, any person using an organic solvent for cleanup shall:

(i) Store all VOC containing cleaning materials and used shop towels in closed containers;

(ii) Ensure that mixing and storage containers used for VOC-containing cleaning materials are kept closed at all times except when depositing or removing these materials;

(iii) Minimize spills of VOC-containing cleaning materials;

(iv) Convey VOC-containing cleaning materials from one location to another in closed containers or pipes; and

(v) Minimize VOC emission from cleaning of storage, mixing, and conveying equipment.

(L) Storage of petroleum liquids in fixed roof tanks.

(1) No person shall place, store, or hold in a fixed roof tank any petroleum liquid with a true vapor pressure which is greater than 1.52 pounds per square inch absolute after the date specified in paragraph (C)(11) of rule 3745-21-04 of the Administrative Code unless such tank, is designed or equipped as follows, except where exempted under paragraph (L)(2) of this rule:

(a) Vapor control equipment which is one of the following:

(i) Internal floating roof; or

(ii) Alternative equivalent control for VOC emissions as may be approved by the director.

(b) If equipped with an internal floating roof, the automatic bleeder vents are to be closed at all times except when the roof is floated off or landed on the roof leg supports, and the rim vents, if provided, are to be set to open when the roof is being floated off the roof leg supports or is at the manufacturer's recommended setting.

(c) All openings, except stub drains, are to be equipped with a cover, seal or lid which is to be in a closed position at all times except when in actual use for tank gauging or sampling.

(d) Other means for reducing the emission of VOC into the ambient air as may be required by the director.

(2) The following tanks are exempted from paragraph (L)(1) of this rule:

(a) Fixed roof tank with a capacity less than forty thousand gallons; and

(b) Fixed roof tank with a capacity less than four hundred twenty-two thousand gallons and used to store produced crude oil and condensate prior to lease custody transfer.

(3) Any owner or operator of a fixed roof tank that is not exempted pursuant to paragraph (L)(2) of this rule shall maintain records of the following information in a readily accessible location for at least five years and shall make copies of the records available to the director upon verbal or written request.

(a) The types of petroleum liquids stored in the tank.

(b) The maximum true vapor pressure (in pounds per square inch absolute), as stored, of each liquid that has a maximum true vapor pressure greater 1.0 pound per square inch absolute.

(4) If an owner or operator places, stores, or holds in a fixed roof tank, that is not exempted pursuant to paragraph (L)(2) of this rule, any petroleum liquid with a true vapor pressure which is greater than 1.52 pounds per square inch absolute and such tank does not comply with the requirements of paragraph (L)(1) of this rule, the owner or operator shall so notify the director within thirty days of becoming aware of the occurrence.

(M) Refinery vacuum producing systems, wastewater separators, and process unit turnarounds.

(1) Each owner or operator of a petroleum refinery shall control the emissions of VOC from any vacuum producing systems no later than the date specified in paragraph (C)(12) of rule 3745-21-04 of the Administrative Code by piping the vapors to an appropriate firebox or incinerator, or by compressing the vapors and adding them to the refinery fuel gas system.

(2) Except for any wastewater separator which is used solely for once-through, noncontact cooling water or for intermittent tank farm drainage resulting from accumulated precipitation, each owner or operator of a petroleum refinery shall control the emissions of VOC from any wastewater separator no later than the date specified in paragraph (C)(13) of rule 3745-21-04 of the Administrative Code by equipping all forebay sections and other separator sections with covers and seals which minimize the amount of oily water exposed to the ambient air. In addition, all covers and forebay and separator sections shall be equipped with lids and seals which are kept in a closed position at all times except when in actual use.

(3) Process unit turnarounds.

(a) Each owner or operator of a petroleum refinery shall control the emissions of VOC from process unit turnarounds no later than the date specified in paragraph (C)(14) of rule 3745-21-04 of the Administrative Code by combusting the vapors as fuel gas or by flaring the vapors until the pressure in the process vessel is 19.7 pounds per square inch absolute or less.

(b) Each owner or operator of a petroleum refinery shall maintain records for a minimum of two years for each process unit turnaround. Such records shall include:

(i) The date the unit was shut down;

(ii) The approximate pressure of the vapors in the process vessel when the VOC emissions were first discharged to the ambient air; and

(iii) The approximate total quantity of VOC emitted to the ambient air.

(N) Use of cutback asphalts and emulsified asphalts in road construction and maintenance.

(1) Except where exempted under paragraph (N)(3) of this rule, no person may allow or permit the use or application of cutback asphalts in road construction and maintenance after the date specified in paragraph (C)(15) of rule 3745-21-04 of the Administrative Code.

(2) Except where exempted under paragraph (N)(3) of this rule, no person may allow or permit the use or application of any emulsified asphalt in road construction and maintenance after the date specified in paragraph (C)(15) of rule 3745-21-04 of the Administrative Code unless the oil distillate content of such emulsified asphalt, as determined by ASTM D244-04, "Standard Method of Testing Emulsified Asphalt," is less than or equal to:

(a) 8.0 per cent by volume for an open-graded mix;

(b) 12.0 per cent by volume for a dense-graded mix; or

(c) 3.0 per cent by volume for any use or application not regulated under paragraphs (N)(2)(a) and (N)(2)(b) of this rule.

(3) The requirements of paragraphs (N)(1) and (N)(2) of this rule shall not apply:

(a) During the period from October fifteenth through April fifteenth;

(b) To the use or application of a prime coat;

(c) To the use or application of any maintenance mix which is to be stockpiled for at least thirty days; and

(d) To the use or application of any cutback asphalt or emulsified asphalt on an unpaved road for the purpose of dust control.

(4) Recordkeeping requirements

(a) Any person using or applying a cutback asphalt or emulsified asphalt in road construction or maintenance during the period from April fifteenth through October fifteenth shall maintain the following records for each cutback asphalt or emulsified asphalt used or applied during that period:

(i) The type and quantity employed;

(ii) If an emulsified asphalt, the oil distillate content;

(iii) The date(s) of application;

(iv) An identification of the road segments where applied;

(v) The type of application (e.g., prime coat, tack coat, seal coat, maintenance mix, crack sealing, dust control, etc.); and

(vi) If the application is by hand for crack sealing, the quantity employed each day per work crew.

(b) The records required by paragraph (N)(4)(a) of this rule shall be maintained for a minimum of two years and shall be available for review by the director or authorized representative during normal business hours.

(O) Solvent metal cleaning.

(1) Except where exempted under paragraph (O)(6) of this rule, the requirements in paragraphs (O)(2), (O)(3), and (O)(4) of this rule shall be satisfied no later than the dates specified in paragraph (C)(16) of rule 3745-21-04 of the Administrative Code.

(2) Each owner or operator of a cold cleaner shall:

(a) Equip the cold cleaner with either:

(i) A cover; and if the solvent has a vapor pressure greater than 0.3 pound per square inch absolute measured at one hundred degrees Fahrenheit, or the solvent is heated or agitated, the cover shall be designed and constructed so that it can be easily operated with one hand; or

(ii) A remote solvent reservoir from which solvent is pumped through a nozzle suspended over a sink-like work area which drains back to the reservoir, provided the sink-like work area has an open drain area of less than sixteen square inches and provided the solvent neither is heated above one hundred twenty degrees Fahrenheit nor has a vapor pressure greater than 0.6 pound per square inch absolute, measured at one hundred degrees Fahrenheit;

(b) Equip the cold cleaner with a device for draining the cleaned parts; and if the solvent has a vapor pressure greater than 0.6 pound per square inch absolute, measured at one hundred degrees Fahrenheit, the drainage facility shall be constructed internally so that parts are enclosed under the cover during draining unless an internal type drainage device cannot fit into the cleaning system;

(c) Install one of the following devices if the solvent vapor pressure is greater than 0.6 pound per square inch absolute measured at one hundred degrees Fahrenheit, or if the solvent is heated above one hundred twenty degrees Fahrenheit:

(i) Freeboard that gives a freeboard ratio greater than or equal to 0.7;

(ii) Water cover (solvent must be insoluble in and heavier than water); or

(iii) Other systems of equivalent control, such as refrigerated chiller or carbon adsorption, approved by the director; and

(d) Operate and maintain the cold cleaner in accordance with the following practices to minimize solvent evaporation from the unit:

(i) Provide a permanent, legible, conspicuous label, summarizing the operating requirements.

(ii) Store waste solvent in covered containers.

(iii) Close the cover whenever parts are not being handled in the cleaner.

(iv) Drain the cleaned parts until dripping ceases.

(v) If used, supply a solvent spray that is a solid fluid stream (not a fine, atomized, or shower-type spray) at a pressure that does not exceed ten pounds per square inch gauge.

(vi) Clean only materials that are neither porous nor absorbent.

(e) Notwithstanding the exemption specified in paragraph (O)(6)(b) of this rule, for each cold cleaner located in Ashtabula, Butler, Clark, Clermont, Cuyahoga, Geauga, Greene, Hamilton, Lake, Lorain, Medina, Miami, Montgomery, Portage, Summit, and Warren counties, comply with the following requirements:

(i) The solvent material employed in the cold cleaner shall have a vapor pressure that does not exceed 1.0 mmHg (0.019 psi) measured at twenty degrees Celsius (sixty-eight degrees Fahrenheit).

(ii) The owner or operator of each cold cleaner shall maintain records for a minimum of five years that include the following information for each solvent purchased:

(a) The date of the purchase;

(b) The name, company identification, and chemical composition of the solvent; and

(c) The vapor pressure of the solvent measured in mmHg at twenty degrees Celsius (sixty-eight degrees Fahrenheit), as determined by ASTM D2879-97, "Standard Test Method for Vapor Pressure-Temperature Relationship and Initial Decomposition Temperature of Liquids by Isoteniscope."

(iii) The cleaning of electronic components as defined in paragraph (G)(3) of rule 3745-21-01 of the Administrative Code are exempt from the requirements of paragraph (O)(2)(e) of this rule.

(iv) The cleaning of paint gun parts, through the use of cold cleaners as defined in paragraph (G)(1) of rule 3745-21-01 of the Administrative Code, for the removal of paint and coatings, is exempt from the requirements of paragraph (O)(2)(e) of this rule.

(3) Each owner or operator of an open top vapor degreaser shall:

(a) Equip the open top vapor degreaser with a cover that can be opened and closed easily without disturbing the vapor zone;

(b) Install the following safety switches:

(i) A condenser thermostat or any other device which shuts off the sump heat if the condenser coolant is either not circulating or too warm;

(ii) A spray safety switch which shuts off the spray pump if the vapor level drops below any fixed spray nozzle;

(iii) A vapor level control thermostat or any other device which shuts off the sump heat when the vapor level rises too high; and

(iv) A water flow switch, water pressure switch or any other device which shuts off the sump heat if the water in a water-cooled condenser has no flow or no pressure, whichever is being monitored.

(c) Install one of the following devices:

(i) A freeboard with a freeboard ratio greater than or equal to 0.75, and if the open top vapor degreaser opening is greater than ten square feet, the cover must be powered or equipped with mechanical features whereby it can be readily closed when the degreaser is not in use;

(ii) Refrigerated chiller;

(iii) Enclosed design (cover or door opens only when the dry part is actually entering or exiting the open top vapor degreaser);

(iv) Carbon adsorption system, with ventilation greater than or equal to fifty cubic feet per minute per square foot of air/solvent interface (when cover is open), and exhausting less than twenty-five parts per million of solvent averaged over one complete adsorption cycle; or

(v) A control system, demonstrated to have control efficiency equivalent to or greater than any of the above, and approved by the director; and

(d) Operate and maintain the open top vapor degreaser in accordance with the following practices to minimize solvent evaporation from the unit:

(i) Keep the cover closed at all times except when processing work loads through the degreaser.

(ii) Minimize solvent carryout by:

(a) Racking parts so that solvent drains freely and is not trapped.

(b) Moving parts in and out of the degreaser at less than eleven feet per minute.

(c) Holding the parts in the vapor zone at least thirty seconds or until condensation ceases, whichever is longer.

(d) Tipping out any pools of solvent on the cleaned parts before removal from the vapor zone.

(e) Allowing parts to dry within the degreaser for at least fifteen seconds or until visually dry, whichever is longer.

(iii) Clean only materials that are neither porous nor absorbent.

(iv) Occupy no more than one-half of the degreaser's open-top area with a workload.

(v) Always spray within the vapor level.

(vi) Repair solvent leaks immediately, or shut down the degreaser.

(vii) Store waste solvent only in covered containers.

(viii) Operate the cleaner such that water cannot be visually detected in solvent exiting the water separator.

(ix) Use no ventilation fans near the degreaser opening.

(x) When the cover is open, do not expose the open top vapor degreaser to drafts greater than one hundred thirty-one feet per minute, as measured between three and six feet upwind and at the same elevation as the tank lip.

(xi) If a lip exhaust is used on the open top vapor degreaser, do not use a ventilation rate that exceeds sixty five cubic feet per minute per square foot of degreaser open area, unless a higher rate is necessary to meet occupational safety and health administration requirements.

(xii) Provide permanent, conspicuous label, summarizing the operating procedures.

(4) Each owner or operator of a conveyorized degreaser shall:

(a) Install one of the following devices on all conveyorized degreasers having an air/solvent interface greater than twenty-two square feet:

(i) Refrigerated chiller;

(ii) Carbon adsorption system, with ventilation greater than or equal to fifty cubic feet per minute per square foot of air/solvent interface (when downtime covers are open), and exhausting less than twenty-five parts per million of solvent by volume averaged over a complete adsorption cycle; or

(iii) A system, demonstrated to have a control efficiency equivalent to or greater than paragraph (O)(4)(a)(i) or (O)(4)(a)(ii) of this rule, and approved by the director;

(b) Equip the conveyorized degreaser with equipment, such as a drying tunnel or rotating (tumbling) basket, sufficient to prevent cleaned parts from carrying out solvent liquid or vapor;

(c) Install the following safety switches, if the solvent is heated to its boiling point:

(i) A condenser flow switch and thermostat or any other device which shuts off the sump heat if the condenser coolant is either not circulating or too warm;

(ii) A spray safety switch which shuts off the spray pump if the vapor level drops below any fixed spray nozzle; and

(iii) A vapor level control thermostat or any other device which shuts off the sump heat when the vapor level rises too high;

(d) Equip the conveyorized degreaser with covers for closing off the entrance and exit when not in use, unless the conveyorized degreaser is equipped

with a refrigerated chiller or carbon adsorption system that is always in use except during maintenance; and

(e) Operate and maintain the conveyorized degreaser in accordance with the following practice to minimize solvent evaporation from the unit:

(i) Use no workplace fans near the degreaser opening, and ensure that exhaust ventilation does not exceed sixty-five cubic feet per minute per square foot of degreaser opening, unless a higher rate is necessary to meet occupational safety and health administration requirements.

(ii) Minimize openings during operation so that entrances and exits silhouette workloads with an average clearance between the parts and the edge of the degreaser opening of less than ten per cent of the width of the opening.

(iii) Provide downtime covers for closing off the entrance and exit during shutdown hours.

(iv) Minimize carryout emission by:

(a) Racking parts so that solvent drains freely from parts and is not trapped.

(b) Maintaining the vertical conveyor speed at less than eleven feet per minute.

(v) Store waste solvent only in covered containers.

(vi) Repair solvent leaks immediately, or shut down the degreaser.

(vii) Operate the cleaner such that water cannot be visually detected in solvent exiting the water separator.

(viii) Place downtime covers over entrances and exits of the conveyorized degreaser at all times when the conveyors and exhausts are not being operated.

(ix) Clean only materials that are neither porous nor absorbent.

(5) Any owner or operator of a solvent metal cleaning operation shall maintain records of the following information in a readily accessible location for at least five years and shall make these records available to the director upon verbal or written request:

(a) All control equipment maintenance such as replacement of the carbon in a carbon adsorption unit.

(b) The results of all emission tests conducted to demonstrate compliance with the requirements of paragraph (O)(3)(c)(iv), (O)(3)(c)(v), (O)(4)(a)(ii), or (O)(4)(a)(iii) of this rule.

(c) For cold cleaners, the types of solvents employed and the vapor pressure of each solvent (pounds per square inch absolute) measured at one hundred degrees Fahrenheit.

(6) Exemptions:

(a) Paragraph (O)(2)(d)(v) of this rule shall not apply to cold cleaners that are research and development sources, as defined under section 3704.01 of the Revised Code, provided that the owner or operator maintains records which demonstrate that the combined VOC emissions from the exempted research and development sources are less than five tons per calendar year.

(b) After June 15, 1999, except as provided in paragraph (O)(2)(e), paragraphs (O)(2) to (O)(5) of this rule shall not apply to any solvent metal cleaning operation which is subject to 40 CFR Part 63, Subpart T, provided the requirements of Subpart T are specified in the terms and conditions of installation and/or operating permit issued by the director.

(c) Where VOC-containing cleaners that exceed the vapor pressure requirements of paragraph (O)(2)(e)(i) of this rule are used to clean cured resin from application equipment, the cleaning of resin application equipment at facilities subject to and complying with the requirements of 40 CFR Part 63, Subpart WWWW, is exempt from the requirements of paragraph (O)(2)(e)(i) of this rule.

(d) The cleaning of medical parts subject to regulation by the food and drug administration and metal parts subject to federal aviation administration and department of defense cleaning solvent specifications is exempt from the requirements of paragraph (O)(2)(e)(i) of this rule provided a documented conflict between said specification and the vapor pressure requirements of paragraph (O)(2)(e)(i) of this rule occurs. Such documentation shall be provided to the appropriate Ohio EPA district office or local air agency.

(P) Bulk gasoline plant.

(1) No owner or operator of a bulk gasoline plant may cause, allow or permit the transfer of gasoline at a bulk gasoline plant after the date specified in paragraph (C)(17) of rule 3745-21-04 of the Administrative Code unless the following

requirements are met, except where exempted under paragraph (P)(5) of this rule:

(a) Each stationary storage tank which stores gasoline at the bulk gasoline plant is loaded by means of a submerged fill pipe;

(b) For any transfer of gasoline from a delivery vessel to a stationary storage tank located at the bulk gasoline plant, the vapors displaced from the stationary storage tank are processed by one of the following systems:

(i) A vapor balance system which is equipped with a vapor tight vapor line from the stationary storage tank to the delivery vessel and a means to ensure that the vapor line is connected before gasoline can be transferred and which is designed and operated to route at least ninety per cent by weight of the VOC in the displaced vapors to the delivery vessel; or

(ii) A vapor control system which is designed and operated to recover at least ninety per cent by weight of the VOC in the displaced vapors;

(c) Any loading rack at the bulk gasoline plant which transfers gasoline to a delivery vessel is equipped for top submerged filling or bottom filling for the transfer of gasoline;

(d) For any transfer of gasoline from a loading rack located at the bulk gasoline plant to a delivery vessel, the vapors displaced from delivery vessel are processed by one of the following systems:

(i) A vapor balance system which is equipped with a vapor tight vapor line from the delivery vessel to the stationary storage tank being unloaded and a means to ensure that the vapor line is connected before gasoline can be transferred and which is designed and operated to route at least ninety per cent by weight of the VOC in the displaced vapors to the stationary storage tank; or

(ii) A vapor control system which is designed and operated to recover at least ninety per cent by weight of the VOC in the displaced vapors; and

(e) All gasoline loading lines, unloading lines and vapor lines are equipped with fittings which are vapor tight.

(2) When a vapor balance system is employed to meet the requirements of paragraph (P)(1)(b) or (P)(1)(d) of this rule, the following operating practices shall be followed:

(a) The vapor balance system shall be kept in good working order and shall be used at all times during the transfer of gasoline;

(b) The delivery vessel hatches shall be closed at all times during the loading of the delivery vessel;

(c) There shall be no leaks in the delivery vessel pressure/vacuum relief valves and hatch covers;

(d) There shall be no leaks in the vapor and liquid lines during the transfer of gasoline; and

(e) The pressure relief valves on the stationary storage tanks and delivery vessels shall be set to release at no less than 0.7 pound per square inch gauge or the highest possible pressure (in accordance with state or local fire codes, or the "National Fire Prevention Association" guidelines).

(3) No owner or operator of a bulk gasoline plant may permit gasoline to be spilled, discarded in sewers, stored in open containers or handled in any other manner that would result in evaporation.

(4) Any owner or operator of a bulk gasoline plant shall repair within fifteen days any leak from the vapor balance system or vapor control system which is employed to meet the requirements of paragraph (P)(1) of this rule when such leak is equal to or greater than one hundred per cent of the lower explosive limit as propane, as determined under paragraph (K) of rule 3745-21-10 of the Administrative Code.

(5) Exemptions.

(a) Paragraphs (P)(1) to (P)(4) of this rule shall not apply to a bulk gasoline plant which has an average daily throughput, based upon the number of days during a calendar year when the bulk plant was actually in operation, of less than four thousand gallons of gasoline.

(b) Paragraph (P)(1)(b) of this rule shall not apply to any stationary storage tank which is equipped with either an internal floating roof or external floating roof.

(6) Any owner or operator of a bulk gasoline plant shall maintain records of the following information in a readily accessible location for at least five years and shall immediately make these records available to the director upon verbal or written request:

(a) The daily quantity of all gasoline loaded into gasoline tank trucks.

(b) The results of any leak checks, including, at a minimum, the following information:

(i) Date of inspection.

(ii) Findings (may indicate no leaks discovered or location, nature, and severity of each leak).

(iii) Leak determination method.

(iv) Corrective action (date each leak repaired and reasons for any repair interval in excess of fifteen calendar days).

(v) Inspector's name and signature.

(7) Reporting requirements.

(a) For any bulk gasoline plant that is exempted pursuant to paragraph (P)(5)(a) of this rule and has an average daily throughput equal to or greater than four thousand gallons per day, the owner or operator shall so notify the director within thirty days of becoming aware of the occurrence.

(b) Any leaks in vapor or liquid lines that are not repaired within fifteen days after identification shall be reported to the director within thirty days after the repair is completed.

(Q) Bulk gasoline terminal.

(1) Except where exempted under paragraph (Q)(4) of this rule, no owner or operator of a bulk gasoline terminal may cause, allow or permit the transfer of gasoline at a bulk gasoline terminal after the date specified in paragraph (C)(18) of rule 3745-21-04 of the Administrative Code unless the following requirements are met:

(a) The loading rack is equipped with a vapor collection system whereby during the transfer of gasoline to any delivery vessel:

(i) All vapors displaced from the delivery vessel during loading are vented only to the vapor collection system: and

(ii) The pressure in the vapor collection system is maintained between minus six and plus eighteen inches of water gauge pressure:

(b) The loading rack is equipped with a vapor control system whereby:

(i) All vapors collected by the vapor collection system are vented to the vapor control system;

(ii) The mass emissions of VOC from the vapor control system do not exceed 0.67 pound of VOC per thousand gallons (eighty milligrams of VOC per liter) of gasoline loaded into the delivery vessel; and

(iii) Any liquid gasoline returned to a stationary storage tank from the vapor control system is free of entrained air to the extent possible with good engineering design;

(c) A means is provided to prevent drainage of gasoline from the loading device when it is not in use or to accomplish complete drainage before the loading device is disconnected; and

(d) All gasoline loading lines and vapor lines are equipped with fittings which are vapor tight.

(2) No owner or operator of a bulk gasoline terminal may permit gasoline to be spilled, discarded in sewers, stored in open containers or handled in any other manner that would result in evaporation.

(3) Any owner or operator of a bulk gasoline terminal shall repair within fifteen days any leak from the vapor collection system and vapor control system which are employed to meet the requirements of paragraph (Q)(1) of this rule when such leak is equal to or greater than one hundred per cent of the lower explosive limit as propane, as determined under paragraph (K) of rule 3745-21-10 of the Administrative Code.

(4) Paragraph (Q)(1) of this rule shall not apply to a bulk gasoline terminal which has a maximum daily throughput equal to or less than twenty thousand gallons of gasoline, provided either:

(a) The gasoline is supplied to the loading rack only from stationary storage tanks, each of which is equipped with an internal floating roof or external floating roof; or

(b) The loading rack is equipped with a vapor balance system that meets the requirements of paragraphs (P)(1)(d)(i), (P)(2) and (P)(4) of this rule.

(R) Gasoline dispensing facilities (stage I vapor control systems).

(1) No owner or operator of a gasoline dispensing facility may cause, allow or permit the transfer of gasoline at a gasoline dispensing facility after the date specified in paragraph (C)(19) of rule 3745-21-04 of the Administrative Code unless the

following requirements are met, except where exempted under paragraph (R)(4) of this rule:

(a) Any stationary storage tank which stores gasoline at the gasoline dispensing facility is equipped with a submerged fill pipe; and

(b) For any transfer of gasoline from a delivery vessel to a stationary storage tank located at the gasoline dispensing facility, the vapors displaced from the stationary storage tank are processed by one of the following systems:

(i) A vapor balance system which is designed and operated to route at least ninety per cent by weight of the VOC in the displaced vapors to the delivery vessel and which is equipped with a means to prevent the discharge of displaced vapors from an unconnected vapor line; or

(ii) A vapor control system which is designed and operated to recover at least ninety per cent by weight of the VOC in the displaced vapors.

(2) When a vapor balance system is employed to meet the requirements of paragraph (R)(1)(b) of this rule, the following operating practices shall be followed:

(a) The vapor balance system shall be kept in good working order and shall be used at all times during the transfer of gasoline;

(b) There shall be no leaks in the delivery vessel pressure/vacuum relief valves and hatch covers; and

(c) There shall be no leaks in the vapor and liquid lines during the transfer of gasoline.

(3) Any owner or operator of a gasoline dispensing facility shall repair within fifteen days any leak from the vapor balance system or vapor control system which is employed to meet the requirements of paragraph (R)(1) of this rule when such leak is equal to or greater than one hundred per cent of the lower explosive limit as propane, as determined under paragraph (K) of rule 3745-21-10 of the Administrative Code.

(4) Paragraphs (R)(1) to (R)(3) of this rule shall not apply to the following:

(a) Any gasoline dispensing facility which has an annual throughput of less than one hundred twenty thousand gallons of gasoline; or

(b) Transfers made to a stationary storage tank which is equipped with an internal floating roof or external floating roof.

(5) Any owner or operator of a gasoline dispensing facility that is exempted from the requirements of paragraphs (R)(1) to (R)(3) of this rule pursuant to paragraph (R)(4)(a) of this rule shall maintain records of the quantity of gasoline delivered to the facility during each calendar month. The records shall be maintained at the facility for a period of three years. The owner or operator shall notify the director if the annual gasoline throughput for any rolling twelve-month period is equal to or greater than one hundred twenty thousand gallons. The director shall be notified within forty-five days after the exceedance occurs.

(S) "Alside, Inc." or any subsequent owner or operator of the "Alside, Inc." facility located at 3773 Akron-Cleveland road, North Hampton township, Summit county, Ohio shall not cause, allow or permit the discharge into the ambient air of any VOCs after the date specified in paragraph (C)(20)(b) of rule 3745-21-04 of the Administrative Code in excess of the following:

(1) 3.5 pounds of VOC per gallon of coating, excluding water and exempt solvents, from a siding (spray) coating line.

(2) 3.5 pounds of VOC per gallon of coating, excluding water and exempt solvents, from a corner coating line.

(T) Leaks from petroleum refinery equipment.

(1) Except as otherwise provided in paragraphs (T)(1)(b) and (T)(1)(c) of this rule, each owner or operator of a petroleum refinery shall comply with the following monitoring, recordkeeping and reporting requirements no later than the date specified in paragraph (C)(27) of rule 3745-21-04 of the Administrative Code:

(a) Except as otherwise indicated in paragraph (T)(1)(b) of this rule, a monitoring program shall be developed and implemented which incorporates the following provisions:

(i) Yearly monitoring of all pump seals, pipeline valves in liquid service and process drains in accordance with the method specified in paragraph (F) of rule 3745-21-10 of the Administrative Code;

(ii) Quarterly monitoring of all compressor seals, pipeline valves in gas service and pressure relief valves in gas service in accordance with the method specified in paragraph (F) of rule 3745-21-10 of the Administrative Code;

(iii) Monthly monitoring of all pump seals by visual methods;

(iv) Monitoring of any pump seal in accordance with the method specified in paragraph (F) of rule 3745-21-10 of the Administrative Code within five working days after any liquids are observed dripping from the seal;

(v) Monitoring of any relief valve in accordance with the method specified in paragraph (F) of rule 3745-21-10 of the Administrative Code within five working days after the valve has vented to the atmosphere; and

(vi) Monitoring of any component in accordance with the method specified in paragraph (F) of rule 3745-21-10 of the Administrative Code within five working days after the repair of a leak;

(b) Pressure relief devices which are connected to an operating flare header, vapor recovery devices, valves which are located in pipelines containing kerosene or heavier liquids, storage tank valves and valves which are not externally regulated are exempt from the monitoring requirements contained in paragraph (T)(1)(a) of this rule;

(c) For any pipeline or pressure relief valves in gas or liquid service, an alternative monitoring schedule may be employed in lieu of the monitoring schedule specified in paragraph (T)(1)(a) of this rule as follows:

(i) The valve is designated as difficult to monitor and is monitored each calendar year, provided the following conditions are met:

(a) Construction of the process unit commenced prior to March 27, 1981;

(b) The owner or operator of the valve demonstrates that the valve cannot be monitored without elevating the monitoring personnel more than six feet above a support surface; and

(c) The owner or operator of the valve has a written plan that requires monitoring of the valve at least once per year;

(ii) The valve is designated as unsafe to monitor and is monitored as frequently as practical during safe to monitor times, provided the following conditions are met:

(a) The owner or operator of the valve demonstrates that the valve is unsafe to monitor because monitoring personnel would be exposed to an immediate danger as a consequence of monitoring on a quarterly or yearly basis as specified in paragraph (T)(1)(a) of this rule; and

(b) The owner or operator of the valve adheres to a written plan that requires monitoring of the valve as frequently as practical during process unit turnarounds and other safe to monitor times;

(d) All pipeline valves in gas service and pressure relief valves in gas service shall be clearly marked and identified in such a manner that they will be obvious to both refinery personnel performing monitoring and to the director;

(e) If a leak is identified as a result of the monitoring program required by paragraph (T)(1)(a) of this rule and the concentration of VOC exceeds ten thousand parts per million by volume, a tag shall immediately be placed on the leaking component. The tag shall be readily visible and weatherproof; it shall bear an identification number; and it shall clearly indicate the date the leak was detected. The tag shall remain in place until the leaking component is repaired;

(f) A monitoring log shall be maintained for all leaking components which are tagged in accordance with paragraph (T)(1)(e) of this rule. The monitoring log shall contain, at a minimum, the following data:

(i) The name of the process unit where the leaking component is located;

(ii) The type of leaking component (such as valve, seal, or other component);

(iii) The tag number of the leaking component;

(iv) The date on which the leaking component was detected;

(v) The date on which the leaking component was repaired;

(vi) The date and results of the monitoring performed within five working days after the leaking component was repaired;

(vii) A record of the calibration of the monitoring instrument;

(viii) A list of those leaking components which cannot be repaired until the next process unit turnaround; and

(ix) The total number of components monitored and the total number of components found leaking during the calendar year;

(g) A copy of any monitoring log shall be retained by the owner or operator for a minimum of two years after the date on which the record was made or the report was prepared;

(h) A copy of any monitoring log shall immediately be made available to the director or an authorized representative of the director, upon verbal or written request, at any reasonable time; and

(i) A report shall be submitted to the director by the fifteenth day of January, April, July and October that gives the total number of components monitored during the previous three calendar months, gives the total number of components found leaking during the previous three calendar months, identifies all components which were found leaking during the previous three calendar months but which were not repaired within fifteen days and identifies all leaking components which cannot be repaired until the next process unit turnaround.

(2) Any owner or operator of a petroleum refinery shall repair and retest any leaking component, which is tagged and identified in accordance with paragraph (T)(1)(e) of this rule, as soon as possible but no later than fifteen days after the leak is found unless the leaking component cannot be repaired until a process unit turnaround occurs.

(3) The director may require a process unit turnaround to occur earlier than the normally scheduled date if the number and severity of leaking components awaiting a turnaround warrant such action. Any such process unit turnaround shall be required by means of an order issued by the director to the owner or operator of the petroleum refinery pursuant to division (R) of section 3704.03 of the Revised Code.

(4) The director may accept an alternative monitoring, recordkeeping and reporting program for that required by paragraph (T)(1) of this rule if the owner or operator of a petroleum refinery can demonstrate to the satisfaction of the director that the alternative program is at least as effective in identifying, documenting and reporting leaks from petroleum refinery equipment as the program outlined in paragraph (T)(1) of this rule. For purposes of this paragraph, any proposed alternative monitoring, recordkeeping and reporting program that the director finds comparable to the requirements of paragraph (DD)(12) or (DD)(13) of this rule or for any individual equipment component, finds equivalent to the federal requirements specified in 40 CFR Part 60, Subparts VV and GG or 40 CFR Part 63, Subparts H and CC shall be acceptable to the director.

Pursuant to this paragraph, the alternative monitoring, recordkeeping and reporting program entitled "Premcor Lima Refinery, LDAR Plan" and dated November 19, 2002 is approved by the director as an acceptable alternative program for the "Premcor Lima Refinery" (premise number 0302020012).

(U) Surface coating of miscellaneous metal parts and products.

For any source located in Ashtabula, Cuyahoga, Geauga, Lake, Lorain, Medina, Portage, or Summit county subject to paragraph (U) of this rule, the requirement to

comply with paragraph (U) of this rule shall terminate at such time the source becomes subject to and complies with rule 3745-21-26 of the Administrative Code.

(1) Except where exempted under paragraph (U)(2) of this rule, or otherwise provided in paragraph (B)(6) of this rule, no owner or operator of a miscellaneous metal part or product coating line may cause, allow or permit the discharge into the ambient air of any VOCs from such coating line after the date specified in paragraph (C)(28) of rule 3745-21-04 of the Administrative Code in excess of the following:

(a) 4.3 pounds of VOC per gallon of coating, excluding water and exempt solvents, or, if a control system is employed, 10.3 pounds of VOC per gallon of solids for a clear coating;

(b) 4.0 pounds of VOC per gallon of coating, excluding water and exempt solvents, or, if a control system is employed, 8.8 pounds of VOC per gallon of solids for a zinc rich primer coating;

(c) 3.5 pounds of VOC per gallon of coating, excluding water and exempt solvents, or, if a control system is employed, 6.7 pounds of VOC per gallon of solids for an extreme performance coating;

(d) 3.5 pounds of VOC per gallon of coating, excluding water and exempt solvents, or, if a control system is employed, 6.7 pounds of VOC per gallon of solids for any coating that is dried at temperatures not exceeding two hundred degrees Fahrenheit;

(e) 4.3 pounds of VOC per gallon of coating, excluding water and exempt solvents, or, if a control system is employed, 10.3 pounds of VOC per gallon of solids for the interior coating of a steel pail or drum;

(f) 3.5 pounds of VOC per gallon of coating, excluding water and exempt solvents, or, if a control system is employed, 6.7 pounds of VOC per gallon of solids for the exterior coating of a steel pail or drum;

(g) 4.9 pounds of VOC per gallon of coating, excluding water and exempt solvents, for a glass adhesion body primer coating used for the installation of any glass windows during the assembly of automobiles and trucks;

(h) 6.2 pounds of VOC per gallon of coating, excluding water and exempt solvents, or, if a control system is employed, 39.2 pounds of VOC per gallon of solids for a high performance architectural aluminum coating; or

(i) 3.0 pounds of VOC per gallon of coating, excluding water and exempt solvents, or, if a control system is employed, 5.1 pounds of VOC per gallon

of solids for any coating that is not regulated under paragraphs (U)(1)(a) to (U)(1)(h) of this rule.

If a miscellaneous metal parts of products coating is subject to two or more limits as listed in paragraphs (U)(1)(a) to (U)(1)(i) of this rule, the limit which is least restrictive shall apply.

(2) The requirements of paragraph (U)(1) of this rule shall not apply to the following:

(a) The application of an exterior coating to marine vessels;

(b) The application of an exterior coating to airplanes;

(c) The repainting (refinishing) of used motor vehicles and trailers;

(d) The application of a customized topcoat and any related customized single coat to motor vehicles, if the maximum number of motor vehicles is less than thirty-five per day;

(e) Any miscellaneous metal parts or products coating line which never uses more than:

(i) For Clark, Greene, Miami, and Montgomery counties, eight gallons per day.

(ii) For Ashtabula, Butler, Clermont, Cuyahoga, Geauga, Hamilton, Lake, Lorain, Medina, Portage, Summit, and Warren counties, three gallons per day.

(iii) For all other counties, ten gallons per day.

Daily usage limitations included in paragraphs (U)(2)(e)(i) to (U)(2)(e)(iii) of this rule shall not apply to coatings employed by the metal parts or products coating line on parts or products which are not metal.

(f) Any coating line that is a new source, as defined by rule 3745-31-01 of the Administrative Code and meets the following requirements:

(i) The construction or modification of the coating line commenced on or after March 27, 1981;

(ii) The director has determined that the otherwise applicable emission limitation(s) in paragraph (U)(1) of this rule is technically or economically infeasible and has established an alternative reasonably

available control technology emission limitation. The alternative limitation shall be the lowest emission limitation that the coating line is capable of meeting by the application of control technology that is reasonably available considering technological and economic feasibility. The alternative limitation shall be an emissions rate (e.g., pounds VOC per gallon) or overall per cent reduction but shall not be in terms of mass per time (e.g., pounds per hour).

(iii) A final installation permit has been issued for the coating line pursuant to Chapter 3745-31 of the Administrative Code. The installation permit shall contain terms and conditions that specify the control requirement or emission limitation that is the basis for the director's alternative limitation determination for the coating line, as described in paragraph (U)(2)(f)(ii) of this rule.

(iv) USEPA has approved the alternative limitation as a revision to the Ohio state implementation plan.

(g) The application of a coating which is subject to paragraph (C), (D), (E), (I), (J), (K), (S), (FF) or (OO) of this rule;

(h) Any facility which always emits less than fifteen pounds of VOC per day (before add-on controls) from all miscellaneous metal parts or products coating lines within the facility (pounds of VOC attributed to metal parts or products coating lines in which non-metal parts or products were being coated shall not count towards this daily limit);

(i) The application of a coating to motorcycles at the "Honda of America Mfg., Inc." motorcycle assembly plant located at 24000 U.S. route 33, Marysville, Ohio;

(j) The application of a coating to bicycles in any coating line for which construction commenced prior to March 27, 1981 at the "Huffy Corporation" bicycle assembly plant located at 410 Grand Lake road, Celina, Ohio, unless a modification for any such coating line has commenced on or after March 27, 1981;

(k) The application of a coating subject to rule 3745-21-19 of the Administrative Code (pertaining to aerospace manufacturing and rework facilities); and

(l) The application of a coating subject to rule 3745-21-20 of the Administrative Code (pertaining to shipbuilding and ship repair operations).

(3) At automobile and light-duty truck assembly plants, the requirements of paragraph (U)(1) of this rule also shall apply to the application of underbody

antichip materials (e.g., underbody plastisol) and to metal surface coating operations other than prime, prime surfacer, topcoat, and final repair operations.

(V) Gasoline tank trucks.

(1) Except where exempted under paragraph (V)(3) of this rule, each owner or operator of a gasoline tank truck shall comply with the following requirements by the date specified in paragraph (C)(29) of rule 3745-21-04 of the Administrative Code:

(a) No gasoline tank truck is to be used for the transfer of gasoline, unless within the previous twelve months it was tested for leaks in accordance with the applicable method specified in paragraph (G) of rule 3745-21-10 of the Administrative Code.

(b) Any gasoline tank truck which, when last tested for leaks, failed to meet all requirements of the applicable method specified in paragraph (G) of rule 3745-21-10 of the Administrative Code is not to be used for the transfer of gasoline.

(c) A record is to be maintained of all gasoline tank trucks which are tested in accordance with paragraph (G) of rule 3745-21-10 of the Administrative Code, and such record is to contain, at a minimum, the following data:

(i) The tank identification number (manufacturer's serial number and/or owner's identification number);

(ii) The calendar year during which the tank was manufactured;

(iii) The date and location of the test;

(iv) The name, title and telephone number of the person who conducted the test, and the name and address of the company where the person is employed;

(v) The following information from the test:

(a) The tank pressure for the start of the pressure test;

(b) The tank pressure for the end of the pressure test;

(c) The tank pressure for the start of the vacuum test;

(d) The tank pressure for the end of the vacuum test; and

(e) The resultant pressure changes for the pressure test and the vacuum test; and

(vi) A list of all repairs which were made to the gasoline tank truck to enable it to pass all applicable requirements of the test.

(d) A copy of the test record required in paragraph (V)(1)(c) of this rule is to be retained by the owner or operator of the tank truck for a minimum of two years after the date on which the test was conducted.

(e) A copy of the test record required in paragraph (V)(1)(c) of this rule is to immediately be made available to the director, or an authorized representative of the director, upon verbal or written request, at any reasonable time.

(f) No gasoline tank truck is to be used for the transfer of gasoline, unless the requirements of paragraphs (V)(1)(a) and (V)(1)(b) of this rule can be readily verified by means of the following:

(i) A copy of the test record required in paragraph (V)(1)(c) of this rule is kept in the gasoline tank truck; or

(ii) A sticker, which contains the tank identification number, the calendar year during which the tank was manufactured, the date the tank last passed the requirements of the applicable test method specified in paragraph (G) of rule 3745-21-10 of the Administrative Code and the name and location of the testing company or department, is prominently displayed on the right side of the front of the tank.

(g) Any gasoline tank truck which has a leak which is equal to or greater than one hundred per cent of the lower explosive limit as propane, as determined under paragraph (K) of rule 3745-21-10 of the Administrative Code, is not to be used for the transfer of gasoline after fifteen days from the detection of such leak unless the leak is repaired.

(h) Whenever any gasoline tank truck is removed from service for routine maintenance and repairs, the gasoline tank truck shall also be inspected/repaired in accordance with the following procedures:

(i) Inspect all dome cover gaskets to ensure they will properly seal against vapor releases. Any dome cover gasket must be replaced if its integrity is in doubt.

(ii) Open and close all dome covers to ensure that the latch tension is such that the cover will be held securely closed to prevent vapor releases.

Any dome covers with inadequate latch tension must be repaired or replaced.

(iii) Inspect the fusible plugs in each dome cover assembly to ensure proper tightness. Any fusible plugs which are found to be loose or defective must be tightened and/or replaced.

(iv) Inspect each vapor vent hood and sealing band for defects. If any defects are found, the defective vapor vent hood and/or sealing band shall be replaced with new components.

(v) Inspect all vapor return hoses and any associated fittings and adaptors for defects that could allow vapor releases. If defects are found, the defective equipment shall be repaired or replaced.

(vi) Inspect any pressure and vacuum relief vents located on the vapor recovery line to ensure that they are clean and in proper working order. If a relief vent is found to be defective, it shall be repaired or replaced.

(i) No gasoline tank truck is to be used for the transfer of gasoline at a bulk gasoline terminal, bulk gasoline plant or gasoline dispensing facility that employs a vapor balance system or vapor control system unless the transfer is done in a manner that ensures the proper operation of the vapor balance system or vapor control system.

(2) The director may require any gasoline tank truck to be tested in accordance with the applicable method specified in paragraph (G) of rule 3745-21-10 of the Administrative Code within a reasonable period of time. Any such test shall be required by means of an order issued by the director to the owner or operator of the gasoline tank truck pursuant to division (R) of section 3704.03 of the Revised Code.

(3) Exempted from the requirements of paragraphs (V)(1) and (V)(2) of this rule is any gasoline tank truck which has a capacity of less than five thousand gallons, unless it either:

(a) Receives gasoline from any loading rack which is equipped with a vapor balance system or vapor control system; or

(b) Delivers gasoline to any stationary storage tank which is equipped with a vapor balance system.

(W) Synthesized pharmaceutical manufacturing facility.

(1) Except where exempted under paragraph (W)(2) of this rule, each owner or operator of a synthesized pharmaceutical manufacturing facility shall comply

with the following requirements no later than the date specified in paragraph (C)(30) of rule 3745-21-04 of the Administrative Code:

(a) Except for any VOC emissions which are collected by a production equipment exhaust system, the discharge of VOC emissions into the ambient air from any reactor, distillation operation, crystallizer, centrifuge or vacuum dryer is to be controlled by one of the following devices:

(i) A surface condenser which has an outlet gas concentration of VOC not exceeding fifty thousand parts per million by volume; or

(ii) A device or system which is, in the judgment of the director, at least as effective in controlling VOC emissions as the above-mentioned surface condenser;

(b) The discharge of VOC emissions into the ambient air from any air dryer or production equipment exhaust system is not to exceed thirty-three pounds in any one day, unless said discharge has been reduced by at least ninety per cent on a weight basis by control equipment;

(c) Except as otherwise provided in paragraph (L) of this rule, any storage tank which holds a VOC that has a vapor pressure greater than 1.5 pounds per square inch absolute at sixty-eight degrees Fahrenheit is to be equipped with one of following devices:

(i) A conservation vent which opens at a pressure of 0.5 ounce per square inch or higher and at a vacuum of 0.5 ounce per square inch or higher; or

(ii) A device or system which is, in the judgment of the director, at least as effective in controlling VOC emissions as the above-mentioned conservation vent;

(d) During any transfer of a VOC, which has a vapor pressure greater than 4.1 pounds per square inch absolute at sixty-eight degrees Fahrenheit, from a truck or railcar to a fixed roof tank which has a capacity greater than two thousand gallons, the vapors displaced from said tank are to be processed by one of the following systems:

(i) A vapor balance system which is designed and operated to route at least ninety per cent by weight of the VOC in the displaced vapors to the truck or railcar; or

(ii) A vapor control system which is designed and operated to recover at least ninety per cent by weight of the VOC in the displaced vapors;

(e) Any centrifuge containing a VOC, any rotary vacuum filter processing a VOC and any other filter having an exposed liquid VOC surface, are to be enclosed if the VOC has a vapor pressure greater than 0.5 pound per square inch absolute at sixty-eight degrees Fahrenheit;

(f) Any in-process tank which contains a VOC is to be equipped with a cover which remains closed, except when production, sampling, maintenance or inspection procedures require access to said tank; and

(g) Any leak in which a VOC is observed to be running or dripping from a vessel or other equipment is to be repaired as soon as possible, but no later than the first time said equipment is off line for a period of time long enough to complete the repair.

(2) Exempted from the requirements of paragraph (W)(1) of this rule is any operation or equipment not associated with the production of drugs.

(X) Rubber tire manufacturing facility.

(1) Except where exempted under paragraph (X)(2) of this rule, each owner or operator of a rubber tire manufacturing facility shall comply with the following requirements no later than the date specified in paragraph (C)(31) of rule 3745-21-04 of the Administrative Code:

(a) Each undertread cementing, tread end cementing and bead dipping operation is to be equipped with a capture system and associated control system which are designed and operated with the following efficiencies for VOCs, as determined under paragraph (C) of rule 3745-21-10 of the Administrative Code:

(i) A capture efficiency which is at least eighty-five per cent by weight; and

(ii) A control efficiency which is at least ninety per cent by weight.

(b) Except as otherwise provided in paragraph (X)(1)(c) of this rule, each green tire spraying operation is to be equipped with a capture system and associated control system which are designed and operated with the following efficiencies for VOCs, as determined under paragraph (C) of rule 3745-21-10 of the Administrative Code:

(i) A capture efficiency which is at least ninety per cent by weight; and

(ii) A control efficiency which is at least ninety per cent by weight.

(c) The requirements of paragraph (X)(1)(b) of this rule do not apply to any green tire spraying operation in which the VOC content of the material

sprayed, as determined in accordance with paragraph (B) of rule 3745-21-10 of the Administrative Code, is a maximum daily weighted average of six per cent or less by weight for material sprayed on the inside of a tire and eleven per cent or less by weight for material sprayed on the outside of a tire.

(2) Exempted from the requirements of paragraph (X)(1) of this rule are the following operations:

(a) Any operation not associated with rubber tires of the following size:

(i) A bead diameter less than or equal to 20.0 inches; and

(ii) A cross-sectional dimension less than or equal to 12.8 inches.

(b) Any operation for which construction commenced prior to March 27, 1981 at the "Cooper Tire and Rubber Company" facility located at Lima and Western avenues, Findlay, Ohio, unless a modification for any such operation has commenced on or after March 27, 1981.

(c) Any operation that produces specialty tires for antique or other vehicles when produced on an irregular basis or with short production runs. (This exemption applies only to tires produced on equipment separate from normal production lines for passenger-type tires.)

(d) Any operation subject to the federal "Standards of Performance for New Stationary Sources, 40 CFR Part 60, Subpart BBB."

(Y) Flexographic, packaging rotogravure and publication rotogravure printing lines.

(1) Except where exempted under paragraph (Y)(2) of this rule, no owner or operator of a flexographic printing line, packaging rotogravure printing line or publication rotogravure printing line may cause, allow or permit the discharge into the ambient air of any VOCs from such printing line after the date specified in paragraph (C)(32) of rule 3745-21-04 of the Administrative Code unless the requirements of either paragraph (Y)(1)(a) or (Y)(1)(b) of this rule are satisfied.

(a) The VOC content of the coatings and inks employed in said printing line, as determined under paragraph (B) of rule 3745-21-10 of the Administrative Code, does not exceed the following limitation:

(i) Forty per cent VOC by volume of the coating and ink, excluding water and exempt solvents; or

(ii) Twenty-five per cent VOC by volume of the volatile matter in the coating and ink.

(b) Said printing line is equipped with a capture system and associated control system which are designed and operated to achieve the following efficiencies for volatile organic compounds, as determined under paragraph (C) of rule 3745-21-10 of the Administrative Code:

(i) A capture efficiency which is:

(a) At least sixty-five per cent by weight, for a flexographic printing line;

(b) At least seventy per cent by weight, for a packaging rotogravure printing line; or

(c) At least eighty per cent by weight, for a publication rotogravure printing line.

(ii) A control efficiency which is at least ninety per cent by weight.

(2) The requirements of paragraph (Y)(1) of this rule shall not apply to the following printing lines:

(a) Any printing line that is subject to and in compliance with the emission limitations in paragraph (H) of this rule, which pertains to vinyl coating;

(b) Any printing line which is located at a facility in which the total maximum usage of coatings and inks in all flexographic, packaging rotogravure and publication rotogravure printing lines is less than or equal to one hundred forty-eight tons per year; except as otherwise provided under paragraph (Y)(3) of this rule;

(c) Any printing line which is used solely to check the quality of the image formation of newly engraved or etched cylinders; and,

(d) Any printing line which is located at a facility in which the total maximum usage of VOC in all coatings and inks employed in all flexographic, packaging rotogravure and publication rotogravure printing lines within the facility is less than or equal to one hundred tons per year, except as otherwise provided under paragraph (Y)(3) of this rule.

(3) Once the requirements of paragraph (Y)(1) of this rule apply to a facility or a flexographic, packaging rotogravure and publication rotogravure printing line within the facility, the facility is not eligible for an exemption under paragraphs (Y)(2)(b) and (Y)(2)(d) of this rule.

(4) In addition to the requirements specified in paragraph (Y)(1) of this rule the following requirements are applicable to all packaging rotogravure printing lines and flexographic packaging printing lines located in Ashtabula, Cuyahoga, Geauga, Lake, Lorain, Medina, Portage and Summit counties.

(a) Any owner or operator of a packaging rotogravure printing line or flexographic packaging printing line with potential emissions that are equal to or greater than 25.0 tons per year of VOC before the application of capture and control devices shall comply with either of the following requirements for the printing line:

(i) Employ a control system in order to reduce VOC emissions from the packaging rotogravure printing line that meets one of the following requirements:

(a) Sixty-five per cent overall control for a press that was first installed prior to March 14, 1995 and that is controlled by an add-on air pollution control device whose first installation date was prior to April 2, 2009.

(b) Seventy per cent overall control for a press that was first installed prior to March 14, 1995 and that is controlled by an add-on air pollution control device whose first installation date was on or after April 2, 2009.

(c) Seventy-five per cent overall control for a press that was first installed on or after March 14, 1995 and that is controlled by an add-on air pollution control device whose first installation date was prior to April 2, 2009.

(d) Eighty per cent overall control for a press that was first installed on or after March 14, 1995 and that is controlled by an add-on air pollution control device whose first installation date was on or after April 2, 2009.

(ii) Employ coatings in the packaging rotogravure printing line or flexographic packaging printing line that comply with the following VOC content limitations:

(a) 0.8 pound of VOC per pound of solids applied; or

(b) 0.16 pound of VOC per pound of coating or ink applied.

The VOC content limits specified above can be met by averaging the VOC content of materials used on a single press, within a single printing line.

(b) Work practice standards for cleaning materials.

Any person or facility subject to this rule that uses VOC-containing clean-up materials shall ensure that VOC emissions are minimized by incorporating the following procedures:

(i) Keep cleaning materials and used shop towels in closed containers; and

(ii) Convey cleaning materials from one location to another in closed containers or pipes.

(Z) Storage of petroleum liquids in external floating roof tanks.

(1) Except where exempted under paragraph (Z)(3) of this rule, no owner or operator of an external floating roof tank shall place, store, or hold any petroleum liquid in any such tank after the date specified in paragraph (C)(33) of rule 3745-21-04 of the Administrative Code, unless the tank is designed or equipped as follows:

(a) The tank is equipped with one of the following:

(i) A liquid-mounted primary seal and a rim-mounted secondary seal;

(ii) A mechanical shoe primary seal and a rim-mounted secondary seal;

(iii) A mechanical shoe primary seal and a shoe-mounted secondary seal, provided the shoe-mounted secondary seal was installed prior to January 1, 1981;

(iv) A vapor-mounted primary seal and a rim-mounted secondary seal;

(v) A flexible wiper primary seal and a rim-mounted secondary seal;

(vi) A liquid-mounted primary seal or a mechanical shoe primary seal, provided the petroleum liquid is crude oil with a pour point of fifty degrees Fahrenheit or higher as determined by ASTM D97-05a; or

(vii) A seal, closure or device which is, in the judgment of the director, equivalent to the following seals in controlling the emission of VOC into the ambient air:

(a) The dual seals specified in paragraph (Z)(1)(a)(i) or (Z)(1)(a)(ii) of this rule; or

(b) Either of the seals specified in paragraph (Z)(1)(a)(vi) of this rule, provided the petroleum liquid is crude oil with a pour point of fifty degrees Fahrenheit or higher as determined by ASTM D97-05a.

(b) Each seal meets the following requirements:

(i) There are no visible holes, tears, or other openings in the seal or seal fabric;

(ii) If the tank is of welded construction, the total seal gap area, as determined under paragraph (I) of rule 3745-21-10 of the Administrative Code, does not exceed:

(a) 10.0 square inches per foot of tank diameter for a liquid-mounted primary seal or mechanical shoe primary seal;

(b) 10.0 square inches per foot of tank diameter for a vapor-mounted primary seal or flexible wiper primary seal, if said seal was installed prior to January 1, 1981;

(c) 1.0 square inch per foot of tank diameter for a vapor-mounted primary seal or flexible wiper primary seal, if said seal was installed on or after January 1, 1981;

(d) 1.0 square inch per foot of tank diameter for a rim-mounted secondary seal or shoe-mounted secondary seal; or

(e) The amount which is assigned by the director for any seal which is equivalent under paragraph (Z)(1)(a)(vii) of this rule;

(iii) If the tank is of riveted construction, the maximum seal gap width, as determined under paragraph (I) of rule 3745-21-10 of the Administrative Code, does not exceed:

(a) 2.5 inches for a mechanical shoe primary seal;

(b) 1.5 inches for a liquid-mounted primary seal, vapor-mounted primary seal, flexible wiper primary seal, shoe-mounted secondary seal or rim-mounted secondary seal; or

(c) The amount which is assigned by the director for any seal which is equivalent under paragraph (Z)(1)(a)(vii) of this rule;

(c) Any opening in the external floating roof, except automatic bleeder vents, rim space vents, leg sleeves, stub drains and slotted gauging/sampling wells, is equipped with:

(i) A cover, seal or lid which remains in the closed position at all times without any visible gaps, except when the opening is in actual use; and

(ii) A projection into the tank below the liquid surface;

(d) Any automatic bleeder vent remains in the closed position, except when the external floating roof is floated off or landed on the roof leg supports;

(e) Any rim vent is set to open only at the manufacturer's recommended setting, except when the external floating roof is being floated off the roof leg supports;

(f) Any emergency roof drain is equipped with a slotted membrane fabric cover or other device which covers at least ninety per cent of the area of the opening;

(g) Any stub drain is equipped with a projection into the tank below the liquid surface; and

(h) Any slotted gauging/sampling well is equipped with an object which floats on the liquid surface within the well and which covers at least ninety per cent of the area of the well opening.

(2) Except where exempted under paragraph (Z)(3) of this rule, each owner or operator of an external floating roof tank which contains a petroleum liquid shall meet the following inspection, recordkeeping and reporting requirements:

(a) Inspect annually and seal and seal fabric for compliance with paragraph (Z)(1)(b)(i) of this rule;

(b) Measure annually, in accordance with the method specified in paragraph (I) of rule 3745-21-10 of the Administrative Code, the secondary seal gap or the primary seal gap, if there is no secondary seal, for compliance with the seal gap requirements of paragraph (Z)(1)(b)(ii) or (Z)(1)(b)(iii) of this rule;

(c) Measure at least once every five years, in accordance with the method specified in paragraph (I) of rule 3745-21-10 of the Administrative Code, the primary seal gap, if there is a secondary seal, for compliance with the seal gap requirements of paragraph (Z)(1)(b)(ii) or (Z)(1)(b)(iii) of this rule;

(d) Maintain for at least two years a record of the following:

(i) The dates and results of any inspections or measurements performed in accordance with paragraphs (Z)(2)(a) to (Z)(2)(c) of this rule; and

(ii) The annual throughput of any petroleum liquid stored in the tank; and

(e) Provide immediately to the director or an authorized representative of the director, upon written or verbal request at any reasonable time, a copy of the record required under paragraph (Z)(2)(d) of this rule.

(3) The following external floating roof tanks shall be exempted from the requirements of paragraphs (Z)(1) and (Z)(2) of this rule:

(a) Any tank which has a capacity of less than forty thousand gallons;

(b) Any tank which has a capacity of less than four hundred twenty thousand gallons and which is used to store produced crude oil or condensate prior to custody transfer; and

(c) Any tank which contains a petroleum liquid which, as stored, has a maximum true vapor pressure less than 1.5 pounds per square inch absolute.

(4) Any owner or operator of an external floating roof tank that is not exempted pursuant to paragraph (Z)(3)(a) or (Z)(3)(b) of this rule shall maintain records of the following information in a readily accessible location for at least five years and shall make copies of the records available to the director upon verbal or written request:

(a) The types of petroleum liquids stored in the tank

(b) The maximum true vapor pressure (pounds per square inch absolute), as stored, of each liquid that has a maximum true vapor pressure greater than 1.0 pound per square inch absolute.

(5) If an owner or operator places, stores, or holds in an external floating roof tank, that is not exempted pursuant to paragraph (Z)(3)(a) or (Z)(3)(b) of this rule, any petroleum liquid with a true vapor pressure which is greater than 1.5 pounds per square inch absolute and such tank does not comply with the requirements of paragraph (Z)(1) of this rule, the owner or operator shall so notify the director within thirty days of becoming aware of the occurrence.

(AA) Perchloroethylene dry cleaning facility.

(1) Except where exempted under paragraph (AA)(2) of this rule, no owner or operator of a perchloroethylene dry cleaning facility may cause, allow or permit the cleaning of articles in perchloroethylene on or after June 14, 1991 unless the following requirements are met:

(a) Any dryer which contains articles cleaned in perchloroethylene is to be equipped and operated in accordance with one of the following:

(i) Any exhaust from the dryer is vented through a carbon adsorber which emits no more than one hundred parts per million by volume of perchloroethylene at any time; or

(ii) The dryer is equipped with or vented to a refrigerated vapor condenser whereby there is no exhaust of perchloroethylene vapors to the ambient air throughout the drying cycle, except for when the dryer's door is momentarily opened during loading or unloading.

(b) The waste from any diatomaceous earth filter which has been used to filter perchloroethylene is to contain no more than twenty-five per cent by weight perchloroethylene, as determined under paragraph (J) of rule 3745-21-10 of the Administrative Code.

(c) The waste from any distillation operation (solvent still) which has been used to distill perchloroethylene is to contain no more than sixty per cent by weight perchloroethylene, as determined under paragraph (J) of rule 3745-21-10 of the Administrative Code.

(d) Any disposable filter cartridge which has been used to filter perchloroethylene is to be drained in the filter housing for at least twenty-four hours before being discarded.

(e) All equipment must be maintained so as to prevent the leaking of perchloroethylene liquid and prevent perceptible vapor leaks from gaskets, seals, ducts, and related equipment. Any equipment which is leaking perchloroethylene liquid or has a perceptible vapor leak is not to be operated until the leak is repaired.

(2) Exemptions.

(a) Paragraphs (AA)(1)(a) to (AA)(1)(e) of this rule shall not apply to any dry cleaning operation which is coin-operated.

(b) Paragraph (AA)(1)(a) of this rule shall not apply to any facility in which the owner or operator has satisfactorily demonstrated that a carbon adsorber or refrigerated condenser cannot be installed because of inadequate space.

(c) Paragraph (AA)(1)(a) of this rule shall not apply to any facility in which the annual amount of fabric dry cleaned with perchloroethylene is less than sixty thousand pounds.

(3) Compliance with paragraph (AA)(1)(e) of this rule shall be determined by means of visual inspection of the following components:

(a) Hose connections, unions, couplings, and valves;

(b) Machine door gaskets and seatings;

(c) Filter head gasket and seating;

(d) Pumps;

(e) Base tanks and storage containers;

(f) Water separators;

(g) Filter sludge recovery;

(h) Distillation unit;

(i) Diverter valves;

(j) Saturated lint from lint basket; and

(k) Cartridge filters.

(4) Each owner or operator of a perchloroethylene dry cleaning facility shall maintain the following records in a readily accessible location for at least three years and shall make these records available to the director or an authorized representative of the director at any reasonable time:

(a) A record of control equipment maintenance, such as replacement of the carbon in a carbon adsorption unit;

(b) A record of the results of visual leak inspections conducted in accordance with paragraph (AA)(3) of this rule;

(c) The results of all tests conducted to determine compliance with the limitations contained in paragraphs (AA)(1)(a)(i), (AA)(1)(b), and (AA)(1)(c) of this rule; and

(d) The annual usage of perchloroethylene, in gallons, and the annual amount of fabric dry cleaned with perchloroethylene, in pounds.

(BB) Petroleum dry cleaning facility.

(1) Except where exempted under paragraph (BB)(3) of this rule, no owner of operator of a petroleum dry cleaning facility may cause, allow or permit the cleaning of articles in petroleum solvent after the date specified in paragraph

(C)(36) of rule 3745-21-04 of the Administrative Code unless the following requirements are met:

(a) Any dryer for articles cleaned in petroleum solvent shall comply with one of the following requirements:

(i) The dryer is a solvent recovery dryer which is operated in a manner such that the dryer remains closed and the solvent recovery phase continues until a final recovered solvent flow rate of 1.7 ounces per minute (fifty milliliters per minute) or less is attained; or

(ii) The emission of VOC into the ambient air from the dryer does not exceed 3.5 pounds of VOC per one hundred pounds dry weight of articles cleaned, as determined under paragraph (L) of rule 3745-21-10 of the Administrative Code.

(b) Any solvent filter for petroleum solvent shall comply with one of the following requirements:

(i) The solvent filter is a cartridge filter which is drained for at least eight hours in its sealed housing before removal of any cartridge; or

(ii) The filtration waste contains, before disposal and exposure to the ambient air, no more than 1.0 pound of VOC per one hundred pounds dry weight of articles cleaned, as determined under paragraph (M) of rule 3745-21-10 of the Administrative Code.

(c) Any bucket or barrel which contains petroleum solvent or petroleum solvent-laden waste shall be covered to minimize solvent evaporation.

(d) Any equipment associated with the use of petroleum solvent shall be visually inspected weekly to identify any liquid leaks of petroleum solvent.

(e) Any liquid or vapor leak of petroleum solvent shall be repaired within fifteen days after identifying the source of the leak, unless a necessary repair part is not on hand. If a repair part is not on hand, it shall be ordered within three working days after identifying the source of the leak. The leak shall be repaired within fifteen days following the delivery of the necessary repair part.

(2) Any owner or operator of a solvent recovery dryer subject to the requirements of paragraph (BB)(1)(a) of this rule shall perform a test, in accordance with paragraph (N) of rule 3745-21-10 of the Administrative Code, to demonstrate the minimum length of time for operating the recovery cycle of the dryer.

(3) Exempted from the requirements of paragraphs (BB)(1)(a), (BB)(1)(b), and (BB)(2) of this rule is any petroleum dry cleaning facility in which:

(a) The total manufacturer's rated capacity of all petroleum solvent dryers is less than or equal to eighty-three pounds of articles, dry basis; or

(b) The total annual consumption of petroleum solvent is less than or equal to four thousand seven hundred gallons.

(4) Recordkeeping requirements.

(a) Any owner or operator of a petroleum solvent dry cleaning facility that is exempted pursuant to paragraph (BB)(3)(b) of this rule shall maintain records of annual solvent consumption in a readily accessible location for at least five years and shall make these records available to the director upon verbal or written request.

(b) Any owner or operator of a petroleum solvent dry cleaning facility shall maintain records of the following information in a readily accessible location for at least five years and shall make these records available to the director upon verbal or written request:

(i) Documentation of the results of any tests performed to determine compliance with the emission limitation specified in paragraph (BB)(1)(a)(ii) of this rule.

(ii) Documentation of the results of any tests performed to determine compliance with the limitation specified in paragraph (BB)(1)(b)(ii) of this rule.

(iii) The results of any measurements to determine compliance with the limitation specified in paragraph (BB)(1)(a)(i) of this rule.

(iv) The results of any leak checks, including, at a minimum, the following information.

(a) Date of inspection.

(b) Findings (may indicate no leaks discovered or location, nature, and severity of each leak).

(c) Leak determination method.

(d) Corrective action (date each leak repaired and reasons for any repair interval in excess of fifteen calendar days).

(e) Inspector's name and signature.

(5) Reporting requirements.

(a) Any test result that shows an exceedance of the limitation specified in paragraph (BB)(1)(a)(i), (BB)(1)(a)(ii), or (BB)(1)(b)(ii) of this rule shall be reported to the director within thirty days after the occurrence.

(b) Any leaks in vapor or liquid lines that are not repaired within fifteen days after identification shall be reported to the director within thirty days after the repair is completed.

(c) For any petroleum dry cleaning facility that is exempted pursuant to paragraph (BB)(3)(b) of this rule and has an annual consumption of petroleum solvent greater than four thousand seven hundred gallons, the owner or operator shall so notify the director within thirty days of becoming aware of the occurrence.

(CC) No owner or operator of a continuous, polystyrene resin manufacturing process may cause, allow, or permit the discharge into the ambient air of any VOC from the material recovery section of the process after the date specified in paragraph (C)(37) of rule 3745-21-04 of the Administrative Code in excess of 0.12 pound of VOC per one thousand pounds of polystyrene resin produced.

(DD) Leaks from process units that produce organic chemicals.

(1) Except where exempted under paragraph (DD)(17) of this rule, each owner or operator of a process unit that produces as an intermediate or final product one or more of the organic chemicals identified in appendix A to this rule shall comply with the requirements in paragraphs (DD)(2) to (DD)(6) of this rule no later than the date specified in paragraph (C)(38) of rule 3745-21-04 of the Administrative Code.

(2) Leak detection and repair program.

(a) A leak detection and repair program for equipment in the process unit shall be developed and implemented in accordance with the requirements specified in paragraphs (DD)(2)(b) to (DD)(2)(m) of this rule.

(b) Except as otherwise provided in paragraphs (DD)(2)(c) and (DD)(2)(d) of this rule, equipment shall be monitored for leaks in accordance with the method specified in paragraph (F) of rule 3745-21-10 of the Administrative Code, as follows:

(i) Any pump in light liquid service shall be monitored monthly.

(ii) Any valve in gas/vapor service or in light liquid service shall be monitored monthly, except that quarterly monitoring may be employed anytime after no leaks are detected during two consecutive months. The quarterly monitoring shall begin with the next calendar quarter following the two consecutive months of no detected leaks and shall be conducted in the first month of each calendar quarter. The quarterly monitoring may continue until a leak is detected, at which time monthly monitoring shall be employed again.

(iii) Any of the following equipment shall be monitored within five calendar days after evidence of a leak or potential leak from the equipment by visual, audible, olfactory, or other detection method:

(a) Any pump in heavy liquid service;

(b) Any valve in heavy liquid service;

(c) Any pressure relief device in light liquid service or in heavy liquid service; and

(d) Any flange or other connector.

(iv) Any equipment in which a leak is detected as described in paragraph (DD)(2)(g) of this rule shall be monitored within five working days after each attempt to repair, unless the owner or operator believes that the equipment was not successfully repaired.

(c) For any valve in gas/vapor service or in light liquid service, an alternative monitoring schedule may be employed in lieu of the monitoring schedule specified in paragraph (DD)(2)(b)(ii) of this rule as follows:

(i) The valve is designated as difficult to monitor and is monitored each calendar year, provided the following conditions are met:

(a) Construction of the process unit commenced prior to May 9, 1986.

(b) The owner or operator of the valve demonstrates that the valve cannot be monitored without elevating the monitoring personnel more than six feet above a support surface.

(c) The owner or operator of the valve has a written plan that requires monitoring of the valve at least once per year.

(ii) The valve is designated as unsafe to monitor and is monitored as frequently as practical during safe to monitor times, provided the following conditions are met:

(a) The owner or operator of the valve demonstrates that the valve is unsafe to monitor because monitoring personnel would be exposed to an immediate danger as a consequence of monitoring on a monthly basis.

(b) The owner or operator of the valve adheres to a written plan that requires monitoring of the valve as frequently as practical during safe to monitor times.

(iii) The valve is subject to an alternative monitoring schedule based on a skip period as specified in paragraph (DD)(12) of this rule.

(d) Excluded from the monitoring requirements of paragraph (DD)(2)(b) of this rule are the following equipment:

(i) Any pump that has no externally actuated shaft penetrating the pump housing and that is designated for no detectable emissions as provided in paragraph (DD)(7) of this rule;

(ii) Any pump that is equipped with a dual mechanical seal which has a barrier fluid system and sensor that comply with the requirements specified in paragraph (DD)(8) of this rule;

(iii) Any pump that is equipped with a closed vent system capable of capturing and transporting any leakage from the pump seal to control equipment, provided the closed vent system and the control equipment comply with the requirements specified in paragraphs (DD)(9) and (DD)(10) of this rule;

(iv) Any valve that has no externally actuated stem penetrating the valve and that is designated for no detectable emissions as provided in paragraph (DD)(7) of this rule; and

(v) Any valve that is subject to the alternative monitoring standard for valves based on the percentage of valves leaking as provided in paragraph (DD)(13) of this rule.

(e) Any pump in light liquid service shall be checked by visual inspection each calendar week for indications of liquids dripping from the pump seal, unless the pump is equipped with a closed vent system capable of transporting any leakage from the pump seal to control equipment, and the closed vent system and control equipment comply with the requirements specified in paragraphs (DD)(9) and (DD)(10) of this rule.

(f) Any sensor employed pursuant to paragraph (DD)(2)(d)(ii) or (DD)(3)(b) of this rule shall be checked daily, unless the sensor is equipped with an audible alarm.

(g) A leak is detected:

(i) When a concentration of ten thousand ppmv or greater is measured from a potential leak interface of any equipment that is monitored for leaks using the method in paragraph (F) of rule 3745-21-10 of the Administrative Code;

(ii) When there is an indication of liquids dripping from the seal of a pump in light liquid service; or

(iii) When a sensor employed pursuant to paragraph (DD)(2)(d)(ii) or (DD)(3)(b) of this rule indicates failure of the seal system, the barrier fluid system, or both.

(h) When a leak is detected as described in paragraph (DD)(2)(g) of this rule, the following procedures shall be followed:

(i) A weatherproof and readily visible identification tag, marked with the equipment identification number, is immediately attached to the leaking equipment.

(ii) A record of the leak and any attempt to repair the leak is entered into the leak repair log kept pursuant to paragraph (DD)(2)(k) of this rule.

(iii) The identification tag attached to the leaking equipment, other than a valve that is monitored pursuant to paragraph (DD)(2)(b)(ii) of this rule, may be removed after the leaking equipment is repaired.

(iv) The identification tag attached to a leaking valve that is monitored pursuant to paragraph (DD)(2)(b)(ii) of this rule may be removed after the leaking valve is repaired, monitored for leaks for two consecutive months as specified in paragraph (DD)(2)(b)(ii) of this rule, and found to have no detected leaks during those two consecutive months.

(i) When a leak is detected as described in paragraph (DD)(2)(g) of this rule, the leaking equipment shall be repaired as soon as practicable, but no later than fifteen calendar days after the leak is detected, except for a delay of repair as provided in paragraph (DD)(11) of this rule. Leaking equipment shall be deemed repaired if the maximum concentration measured pursuant to paragraph (DD)(2)(b)(iv) of this rule is less than ten thousand ppmv.

(j) When a leak is detected as described in paragraph (DD)(2)(g) of this rule, a first attempt at repair shall be made no later than five calendar days after the leak is detected; and the first attempts at repair shall include, but are not limited to, the following best practices where practicable:

(i) Tightening of bonnet bolts;

(ii) Replacement of bonnet bolts;

(iii) Tightening of packing gland nuts; and

(iv) Injection of lubricant into lubricated packing.

(k) When a leak is detected as described in paragraph (DD)(2)(g) of this rule, the following information shall be recorded in a leak repair log:

(i) The identification number of the leaking equipment and, for leaks based on monitoring, the identification numbers of the leak detection instrument and its operator;

(ii) The basis for the detection of the leak; for example, monitoring, visual inspection, or sensor;

(iii) The date on which the leak was detected and the date of each attempt to repair the leaking equipment;

(iv) The methods of repair applied in each attempt to repair the leaking equipment;

(v) One of the following entries within five working days after each attempt to repair the leaking equipment:

(a) "Not monitored," denoting the leaking equipment was presumed to still be leaking and it was not monitored; or

(b) If the leaking equipment was monitored with a leak detection instrument, the maximum concentration that was measured as follows:

(i) The actual reading in ppmv; or

(ii) "Below 10,000," denoting less than ten thousand ppmv; or

(iii) "Above 10,000," denoting not less than ten thousand ppmv;

(vi) If the leak is not repaired within fifteen calendar days after the date on which it was detected:

(a) "Repair delayed" and the reason for the delay;

(b) If repair is being delayed until the next process unit shutdown due to technical infeasibility of repair, the signature of the owner or operator whose decision it was that repair is technically infeasible without a process unit shutdown;

(c) The expected date of successful repair of the leak;

(d) The dates of process unit shutdowns that occur while the leaking equipment is unrepaired; and

(vii) The date on which the leak was successfully repaired.

(l) The leak repair log shall be retained by the owner or operator of the process unit in a readily accessible location for a minimum of two years after the date on which the record was made.

(m) Semiannual reports shall be submitted to the director by the first day of February and August and shall include the following information for the preceding semiannual periods:

(i) The process unit identification;

(ii) The number of pumps in light liquid service excluding those pumps designated for no detectable emissions under the provision of paragraph (DD)(2)(d)(i) of this rule and those pumps complying with paragraph (DD)(2)(d)(iii) of this rule;

(iii) The number of valves in gas/vapor service or in light liquid service excluding those valves designated for no detectable emission under the provision of paragraph (DD)(2)(d)(iv) of this rule and those valves subject to the alternative standard for monitoring under the provision of paragraph (DD)(2)(d)(v) of this rule;

(iv) The number of compressors excluding those compressors designated for no detectable emissions under the provision of paragraph (DD)(3)(c) of this rule and those compressors complying with paragraph (DD)(3)(d) or (DD)(3)(e) of this rule;

(v) For each month during the semiannual period:

(a) The number of pumps in light liquid service for which leaks were detected as described in paragraph (DD)(2)(g) of this rule;

(b) The number of pumps in light liquid service for which leaks were not repaired within fifteen calendar days after the date of leak detection;

(c) The number of valves in gas/vapor service or in light liquid service for which leaks were detected as described in paragraph (DD)(2)(g) of this rule;

(d) The number of valves in gas/vapor service or in light liquid service for which leaks were not repaired within fifteen calendar days after the date of leak detection;

(e) The number of compressors for which leaks were detected as described in paragraph (DD) of this rule;

(f) The number of compressors for which leaks were not repaired within fifteen calendar days after the date of leak detection; and

(g) The facts that explain each delay of repair allowed pursuant to paragraph (DD)(11) of this rule; and

(vi) The dates of process unit shutdowns that occurred within the semiannual period.

(3) Compressors.

(a) Except as otherwise provided in paragraphs (DD)(3)(c) to (DD)(3)(e) of this rule, any compressor in the process unit shall comply with the requirements specified in paragraph (DD)(3)(b) of this rule.

(b) The compressor shall be equipped with a seal that has a barrier fluid system and sensor which comply with the requirements specified in paragraph (DD)(8) of this rule.

(c) Excluded from the requirements of paragraph (DD)(3)(b) of this rule is any compressor that is designated for no detectable emissions as provided in paragraph (DD)(7) of this rule.

(d) Excluded from the requirements of paragraph (DD)(3)(b) of this rule is any compressor that is equipped with a closed vent system capable of capturing and transporting any leakage from the compressor seal to control equipment, provided the closed vent system and the control equipment

comply with the requirements specified in paragraphs (DD)(9) and (DD)(10) of this rule.

(e) Excluded from the requirements of paragraph (DD)(3)(b) of this rule is any reciprocating compressor that meets the following conditions:

(i) The compressor was installed prior to May 9, 1986; and

(ii) The owner or operator of the compressor demonstrates to the satisfaction of the director that recasting the compressor distance piece or replacing the compressor are the only options available to bring the compressor into compliance with the requirements of paragraph (DD)(3)(b) of this rule.

(4) Pressure relief devices in gas/vapor service.

(a) Except as otherwise provided in paragraph (DD)(4)(e) of this rule, any pressure relief device in gas/vapor service in the process unit shall comply with the requirements specified in paragraphs (DD)(4)(b) to (DD)(4)(d) of this rule.

(b) Except during pressure releases, the pressure relief device shall be operated with no detectable emissions, as indicated by an instrument reading of less than five hundred ppmv above background, as measured by the method specified in paragraph (F) of rule 3745-21-10 of the Administrative Code.

(c) No later than five calendar days after a pressure release, the pressure relief device shall be tested to confirm the condition of no detectable emissions in accordance with the method specified in paragraph (F) of rule 3745-21-10 of the Administrative Code.

(d) After each pressure release, the pressure relief device shall be returned to a condition of no detectable emissions as soon as practicable, but no later than five calendar days after the pressure release, except for a delay of repair as provided in paragraph (DD)(11) of this rule.

(e) Excluded from the requirements of paragraphs (DD)(4)(b) to (DD)(4)(d) of this rule is any pressure relief device that is equipped with a closed vent system capable of capturing and transporting leakage through the pressure relief device to control equipment, provided the closed vent system and control equipment comply with the requirements specified in paragraphs (DD)(9) and (DD)(10) of this rule.

(5) Sampling connection system.

(a) Except as otherwise provided in paragraph (DD)(5)(c) of this rule, any sampling connection system in the process unit shall comply with the requirements specified in paragraph (DD)(5)(b) of this rule.

(b) The sampling connection system shall be equipped with a closed purge system or a closed vent system that meets one of the following requirements:

(i) The purged process fluid is returned directly to the process line with zero VOC emissions to the ambient air;

(ii) The purged process fluid is collected and recycled with zero VOC emissions to the ambient air; or

(iii) The closed purge system or closed vent system is designed and operated to capture and transport all the purged process fluid to control equipment that meet the requirements specified in paragraph (DD)(10) of this rule.

(c) Excluded from the requirements of paragraph (DD)(5)(b) of this rule is any sampling connection system that is an in-situ sampling system.

(6) Open-ended valves or lines.

(a) Any open-ended valve or line in the process unit shall be equipped with a cap, blind flange, plug, or second valve and shall comply with the requirements specified in paragraphs (DD)(6)(b) to (DD)(6)(d) of this rule.

(b) Except during operations requiring the flow of process fluid through the open-ended valve or line, the cap, blind flange, plug, or second valve shall seal the open end of the open-ended valve or line.

(c) If equipped with a second valve, the open-ended valve or line shall be operated in a manner such that the valve on the process fluid end is closed before the second valve is closed.

(d) If a double block and bleed system is being used, the bleed valve or line may remain open during operations that require venting the line between the block valves, but shall comply with paragraph (DD)(6)(b) of this rule at all other times.

(7) Equipment designated for no detectable emissions.

(a) Any equipment (pump, valve, or compressor) designated for no detectable emissions pursuant to paragraph (DD)(2)(d)(i), (DD)(2)(d)(iv) or

(DD)(3)(c) of this rule shall comply with the requirements specified in paragraphs (DD)(7)(b) to (DD)(7)(d) of this rule.

(b) The equipment shall be operated with no detectable emissions as indicated by an instrument reading of less than five hundred ppmv above background as measured by paragraph (F) of rule 3745-21-10 of the Administrative Code.

(c) The equipment shall be tested for compliance with paragraph (DD)(7)(b) of this rule initially upon designation and annually.

(d) The designation of the equipment shall be signed by the owner or operator of the equipment in the log kept pursuant to paragraph (DD)(14)(b) of this rule.

(8) Barrier fluid systems and sensors for pumps and compressors.

(a) When a pump or compressor is equipped with a seal that has a barrier fluid system and sensor which are employed to meet the requirements of paragraph (DD)(2)(d)(ii) or (DD)(3)(a) of this rule, the requirements of paragraphs (DD)(8)(b) to (DD)(8)(d) of this rule shall be met.

(b) The barrier fluid system shall meet one of the following conditions:

(i) The barrier fluid system is operated with a barrier fluid at a pressure that is at all times greater than the stuffing box pressure of the pump or compressor.

(ii) The barrier fluid system is equipped with a barrier fluid degassing reservoir that is connected by a closed vent system to control equipment and the closed vent system and control equipment comply with the requirements specified in paragraphs (DD)(9) and (DD)(10) of this rule.

(iii) The barrier fluid system is equipped with a system that purges the barrier fluid into a process stream with zero VOC emissions to the ambient air.

(c) The barrier fluid system shall be in heavy liquid service or shall not be in VOC service.

(d) The barrier fluid system shall be equipped with a sensor that will detect failure of the seal system, the barrier fluid system, or both based on criteria determined by the owner or operator from design considerations and operating experience.

(9) Closed vent systems.

(a) Any closed vent system that is used to comply with the requirements of paragraph (DD)(2)(d)(iii), (DD)(3)(d), (DD)(4)(e), or (DD)(8)(b)(ii) of this rule shall comply with the requirements specified in paragraphs (DD)(9)(b) to (DD)(9)(d) of this rule.

(b) The closed vent system shall be designed and operated with no detectable emissions, as indicated by an instrument reading of less than five hundred ppmv above background, as measured by the method specified in paragraph (F) of rule 3745-21-10 of the Administrative Code.

(c) The closed vent system shall be tested for compliance with paragraph (DD)(9)(b) of this rule initially and annually.

(d) The closed vent system shall be operated at all times when emissions may be vented to it.

(10) Control equipment.

(a) Any control equipment that is used to comply with the requirements of paragraph (DD)(2)(d)(iii), (DD)(3)(d), (DD)(4)(e), (DD)(5)(b)(iii), (DD)(8)(b)(ii), or (DD)(11)(d)(ii) of this rule shall comply with the requirements specified in paragraphs (DD)(10)(b) to (DD)(10)(f) of this rule.

(b) If the control equipment is a vapor recovery system, it shall be designed and operated to recover VOC emissions vented to it with an efficiency of at least ninety-five per cent by weight.

(c) If the control equipment is an enclosed combustion device, it shall be designed and operated to reduce the VOC emissions vented to it with an efficiency of at least ninety-five per cent by weight, or to provide a minimum residence time of 0.75 second at a minimum temperature of fifteen hundred degrees Fahrenheit.

(d) If the control equipment is a flare, it shall meet the following requirements:

(i) The flare shall be designed for and operated with no visible emissions as determined by USEPA method 22, except for periods not to exceed a total of five minutes during any one hundred twenty consecutive minutes.

(ii) The flare shall be operated with either an electric arc ignition system or a pilot flame. If a pilot flame is employed, the flame shall be present at all times and shall be monitored with a thermocouple or any other

equivalent device to detect the presence of the pilot flame. If an electric arc ignition system is employed, the arcing shall pulse continually and shall be monitored to detect any failure.

(iii) The flare shall be steam-assisted, air-assisted or nonassisted.

(iv) The net heating value of the gas being combusted in the flare, as determined by the method specified in paragraph (P)(2) of rule 3745-21-10 of the Administrative Code, shall be three hundred Btu/scf or greater if the flare is steam-assisted or air-assisted, or shall be two hundred Btu/scf or greater if the flare is nonassisted.

(v) Except as provided in paragraph (DD)(10)(d)(vi) of this rule, the flare shall be designed and operated with an actual exit velocity, as determined by the method specified in paragraph (P)(3) of rule 3745-21-10 of the Administrative Code, less than sixty feet per second if the flare is steam-assisted or nonassisted, or less than the maximum permitted velocity, as determined in paragraph (P)(4) of rule 3745-21-10 of the Administrative Code, if the flare is air-assisted.

(vi) Excluded from the requirements of paragraph (DD)(10)(d)(v) of this rule is any steam-assisted or nonassisted flare that meets both of the following requirements:

(a) The net heating value of the gas being combusted in the flare, as determined by the method specified in paragraph (P)(2) of rule 3745-21-10 of the Administrative Code, shall be greater than one thousand Btu/scf.

(b) The flare shall be designed and operated with an actual exit velocity, as determined by the method specified in paragraph (P)(3) of rule 3745-21-10 of the Administrative Code, less than four hundred feet per second.

(e) The owner or operator of the control equipment shall monitor the control equipment to ensure that it is operated and maintained in conformance with its design.

(f) The control equipment shall be operated at all times when emissions may be vented to it.

(11) Delay of repair.

(a) A delay of repair that is employed pursuant to paragraph (DD)(2)(i) or (DD)(4)(d) of this rule shall be allowed only as provided in paragraphs (DD)(11)(b) to (DD)(11)(f) of this rule.

(b) A delay of repair shall be allowed if the repair is technically infeasible without a process unit shutdown. However, the repair shall occur before the end of the next process unit shutdown.

(c) A delay of repair shall be allowed for a piece of equipment that is isolated from the process and that does not remain in VOC service (for example, isolated from the process and properly purged).

(d) A delay of repair for a valve shall be allowed if:

(i) The owner or operator of the valve demonstrates that the emission of purged material resulting from immediate repair is greater than the emission likely to result from delay of repair; and

(ii) When repair procedures are effected, the purged material is collected and destroyed or recovered in control equipment that meets the requirements specified in paragraph (DD)(10) of this rule.

(e) A delay of repair for a pump shall be allowed if:

(i) The repair requires the use of a dual mechanical seal system and associated barrier fluid system; and

(ii) The repair is completed as soon as practicable, but no later than six months after the leak was detected.

(f) A delay of repair beyond a process unit shutdown shall be allowed for a valve if a valve assembly replacement is necessary during the process unit shutdown, valve assembly supplies have been depleted, and valve assembly supplies had been sufficiently stocked before the supplies were depleted. A delay of repair beyond the next process unit shutdown shall not be allowed for that valve unless the next process unit shutdown occurs sooner than six months after the first process unit shutdown.

(12) Alternative monitoring schedule for valves based on a skip period.

(a) Any owner or operator of a process unit may elect to implement an alternative monitoring schedule in lieu of the monitoring requirements specified in paragraph (DD)(2)(b)(ii) of this rule, as provided in paragraph (DD)(2)(c)(iii) of this rule. The alternative monitoring schedule shall be based on skipping quarterly monitoring periods provided the percentage of valves leaking is no more than 2.0. Any owner or operator who elects to implement an alternative monitoring schedule shall comply with the requirements specified in paragraphs (DD)(12)(b) to (DD)(12)(h) of this rule.

(b) The owner or operator must notify the director prior to implementing this alternative monitoring schedule. Such notification must identify which valves will be subject to this alternative monitoring schedule and which work practice within paragraph (DD)(12)(e) of this rule will be implemented. Any valve in vacuum service, in heavy liquid service, or not in VOC service, shall be excluded from this alternative monitoring schedule.

(c) Any valve subject to this alternative monitoring schedule shall comply initially with the monitoring requirements specified in paragraph (DD)(2)(b)(ii) of this rule.

(d) Any valve subject to this alternative monitoring schedule shall continue to be subject to the requirements specified in paragraphs (DD)(2)(g) to (DD)(2)(m) of this rule.

(e) One of the following two alternative work practices for skipping monitoring periods may be implemented:

(i) After two consecutive quarterly leak detection periods with the percentage of valves leaking equal to or less than 2.0, a monitoring program may begin in which the first quarter of every two consecutive quarterly leak detection periods is skipped.

(ii) After five consecutive quarterly leak detection periods with the percentage of valves leaking equal to or less than 2.0, a monitoring program may begin in which the first three quarters of every four consecutive quarterly periods is skipped.

(f) If the percentage of valves leaking is greater than 2.0, the owner or operator shall comply with the monitoring requirements as specified in paragraph (DD)(2)(b)(ii) of this rule, but may again elect to use this alternative monitoring schedule.

(g) The percentage of valves leaking shall be determined for the valves subject to this alternative monitoring schedule as the sum of the number of those valves found leaking during any portion of the current monitoring period and the number of those valves found leaking during a previous monitoring period for which repair has been delayed during the current monitoring period, divided by the total number of valves, and multiplied by one hundred.

(h) The following information pertaining to valves subject to this alternative monitoring schedule shall be recorded in a log that is kept in a readily accessible location:

(i) A schedule of monitoring; and

(ii) The percentage of valves leaking during each monitoring period.

(13) Alternative monitoring standard for valves based on the allowable percentage of valves leaking.

(a) Any owner or operator of a process unit may elect to implement an alternative monitoring standard in lieu of the monitoring requirements specified in paragraph (DD)(2)(b)(ii) of this rule, as provided in paragraph (DD)(2)(d)(v) of this rule. The alternative monitoring standard shall be based on maintaining the percentage of valves leaking at 2.0 or less. Any owner or operator who elects to implement an alternative monitoring standard shall comply with the requirements specified in paragraphs (DD)(13)(b) to (DD)(13)(g) of this rule.

(b) The owner or operator must notify the director prior to implementing this alternative monitoring standard.

(c) All valves in gas/vapor service or in light liquid service in the process unit shall be subject to this alternative monitoring standard, except for those valves which are designated as unsafe to monitor as provided in paragraph (DD)(2)(c)(ii) of this rule, those valves not in VOC service, and those valves in vacuum service.

(d) The percentage of valves leaking, as determined in accordance with paragraph (DD)(13)(f) of this rule, shall not exceed 2.0. If the percentage of valves leaking is greater than 2.0, the owner or operator shall comply with the monitoring requirements as specified in paragraph (DD)(2)(b)(ii) of this rule, but may again elect to use this alternative monitoring standard.

(e) All valves subject to this alternative monitoring standard shall be tested for compliance with paragraph (DD)(13)(d) of this rule initially upon implementation and annually.

(f) A compliance test shall be conducted in the following manner:

(i) All valves subject to this alternative monitoring standard shall be monitored for leaks within a one-week period by the method specified in paragraph (F) of rule 3745-21-10 of the Administrative Code.

(ii) If an instrument reading of ten thousand ppmv or greater is measured, a leak is detected.

(iii) The percentage of valves leaking shall be determined as the number of valves for which a leak is detected, divided by the number of valves monitored, and multiplied by one hundred.

(g) When a leak is detected as described in paragraph (DD)(13)(f)(ii) of this rule, the leaking valve shall be repaired in accordance with paragraphs (DD)(2)(h) and (DD)(2)(i) of this rule.

(14) Recordkeeping.

(a) Each owner or operator of a process unit as described in paragraph (DD)(1) of this rule shall comply with the recordkeeping requirements of paragraphs (DD)(14)(b) to (DD)(14)(g) of this rule. An owner or operator of more than one process unit may use one recordkeeping system to comply with the recordkeeping requirements, provided the system identifies each record by each process unit.

(b) The following information shall be recorded in a log that is kept in a readily accessible location:

(i) A list of identification numbers for equipment subject to the requirements of paragraphs (DD)(2) to (DD)(10) of this rule;

(ii) A list of identification numbers for equipment designated for no detectable emissions as provided in paragraph (DD)(7) of this rule, and a signature of the owner or operator authorizing such designation;

(iii) A list of identification numbers for pressure relief devices subject to paragraph (DD)(4) of this rule;

(iv) A list of identification numbers for closed vent systems subject to paragraph (DD)(9) of this rule; and

(v) For compliance tests required under paragraphs (DD)(4)(c), (DD)(7)(c), and (DD)(9)(c) of this rule:

(a) The date of each compliance test;

(b) The background level measured during each compliance test; and

(c) The maximum instrument reading measured at the equipment during each compliance test.

(c) The following information pertaining to valves subject to an alternative monitoring schedule, as provided in paragraph (DD)(2)(c) of this rule, shall be recorded in a log that is kept in a readily accessible location:

(i) A list of identification numbers for valves designated as unsafe to monitor, an explanation for each valve stating why the valve is unsafe to monitor, and the plan for monitoring each valve;

(ii) A list of identification numbers for valves designated as difficult to monitor, an explanation for each valve stating why the valve is difficult to monitor, and the schedule for monitoring each valve; and

(iii) A list of identification numbers for valves subject to the alternative monitoring schedule based on a skip period, a schedule for monitoring, and the percentage of valves leaking during each monitoring period.

(d) The following information pertaining to closed vent systems and control equipment described in paragraphs (DD)(9) and (DD)(10) of this rule shall be recorded and kept in a readily accessible location:

(i) Detailed schematics, design specifications, and piping and instrumentation diagrams;

(ii) The dates and descriptions of any changes in the design specifications;

(iii) A description of the parameter or parameters monitored, as required in paragraph (DD)(10)(d) of this rule, to ensure that the control equipment is operated and maintained in conformance with its design, and an explanation of the reason for selecting such parameter or parameters;

(iv) Periods when the closed vent systems and control equipment are not operated as designed, including periods when a flare pilot light does not have a flame; and

(v) Dates of startups and shutdowns of the closed vent systems and control equipment.

(e) The following information pertaining to barrier fluid systems and sensors described in paragraph (DD)(8) of this rule shall be recorded in a log that is kept in a readily accessible location:

(i) A list of identification numbers of pumps and compressors equipped with such barrier fluid systems and sensors;

(ii) The criteria that indicate failure of the seal system, the barrier fluid system, or both, as required in paragraph (DD)(8)(d) of this rule and an explanation of the criteria; and

(iii) Any changes to such criteria and the reasons for the changes.

(f) The following information for use in determining an exemption for the process unit as provided in paragraph (DD)(17)(a) of this rule shall be recorded in a log that is kept in a readily accessible location:

(i) An analysis demonstrating the design capacity of the process unit;

(ii) A statement listing the feed and raw materials and products from the process unit and an analysis demonstrating whether these chemicals are heavy liquids or beverage alcohols; or

(iii) An analysis demonstrating that no equipment is in VOC service.

(g) The following information pertaining to specific equipment that are exempt as provided in paragraph (DD)(17)(b) of this rule shall be recorded in a log that is kept in a readily accessible location:

(i) A list of identification numbers of equipment in vacuum service;

(ii) A list of identification numbers of equipment not in VOC service and the information or data used to demonstrate that the equipment is not in VOC service; and

(iii) A list of equipment subject to an equivalent emission requirement that is approved by the director pursuant to paragraph (DD)(16) of this rule.

(15) Reporting.

(a) Each owner or operator of a process unit as described in paragraph (DD)(1) of this rule shall comply with the reporting requirements specified in paragraphs (DD)(15)(b) to (DD)(15)(d) of this rule.

(b) For compliance tests required under paragraphs (DD)(7)(c) and (DD)(9)(c) of this rule, the requirements of paragraphs (A)(3) and (A)(4) of rule 3745-21-10 of the Administrative Code (pertaining to notification of intent to test) shall be met. The results of such compliance tests shall be reported to the appropriate Ohio EPA district office or local air agency within thirty days after the test date.

(c) The results of compliance tests required under paragraph (DD)(4)(c) of this rule shall be reported semiannually to the appropriate Ohio EPA district office or local air agency. The semiannual reports shall be submitted by the first day of February and August and shall include information for the preceding semiannual period.

(d) Any semiannual reports required under paragraph (DD)(2)(m) of this rule may be sent to the appropriate Ohio EPA district office or local air agency.

(16) Equivalent requirement.

(a) Any owner or operator of a process unit may apply to the director for determination of an equivalent requirement in lieu of the requirements specified in paragraphs (DD)(2) to (DD)(10) of this rule. The determination of equivalence will be evaluated by the guidelines specified in paragraphs (DD)(16)(b) to (DD)(16)(d) of this rule. If the director approves an equivalent requirement for a process unit, said requirement shall be specified in the special terms and conditions of an operating permit or variance issued by the director for the process unit.

(b) The owner or operator applying for a determination of equivalency shall be responsible for collecting and verifying test data to demonstrate the proposed equivalence.

(c) The equivalent requirement shall achieve a reduction in emissions of VOC at least equivalent to the reduction in emissions of VOC that would be achieved by compliance with the applicable requirements of paragraph (DD) of this rule.

(d) The director may condition the approval of equivalence as necessary to ensure the same emission reduction as the applicable requirements of paragraph (DD) of this rule.

(17) Exemptions.

(a) Exempted from the requirements of paragraphs (DD)(2) to (DD)(6) of this rule are the following process units:

(i) Any process unit that has a design capacity to produce less than one thousand one hundred tons per year;

(ii) Any process unit that produces only heavy liquid chemicals from heavy liquid feed or raw materials;

(iii) Any process unit that produces beverage alcohol;

(iv) Any process unit that has no equipment in VOC service as determined in accordance with paragraph (O)(2) of rule 3745-21-10 of the Administrative Code; and

(v) Any process unit at a petroleum refinery, as defined in paragraph (E)(15) of rule 3745-21-01 of the Administrative Code.

(b) Exempted from the requirements of paragraphs (DD)(2) to (DD)(6) of this rule are the following equipment:

(i) Any equipment not in VOC service, as determined in accordance with paragraph (O)(2) of rule 3745-21-10 of the Administrative Code;

(ii) Any equipment in vacuum service; and

(iii) Any equipment subject to an equivalent emission limitation as provided in paragraph (DD)(16) of this rule.

(EE) Air oxidation processes that produce organic chemicals.

(1) Except where exempted under paragraph (EE)(2) of this rule, no owner or operator of an air oxidation process that produces an organic chemical identified in appendix A to this rule may cause, allow or permit the discharge into the ambient air of VOC from any process vent stream after the date specified in paragraph (C)(39) of rule 3745-21-04 of the Administrative Code unless the process vent stream is vented to a combustion device that is designed and operated either:

(a) To reduce the VOC emissions vented to it with an efficiency of at least ninety-eight per cent by weight; or

(b) To emit VOC at a concentration less than twenty parts per million by volume, dry basis.

(2) Exemptions.

(a) Any process vent stream which is vented to a combustion device for which construction commenced prior to May 9, 1986, shall be exempt from the requirements of paragraph (EE)(1) of this rule, provided the combustion device is operated and maintained in accordance with design specifications and good engineering practices. This exemption shall terminate for such process vent stream if the combustion device is replaced with new control equipment for which construction commenced on or after May 9, 1986.

(b) Any process vent stream or combination of process vent streams which has a total resource effectiveness value greater than 1.0 shall be exempt from the requirements of paragraph (EE)(1) of this rule. If an air oxidation process has more than one process vent stream, the total resource effectiveness shall be based upon a combination of the process vent streams.

(3) Total resource effectiveness value.

(a) The total resource effectiveness value for an air oxidation process shall be calculated in accordance with the following equations:

(i) For nonchlorinated process vent streams with a net heating value less than or equal to 3.6 and for all chlorinated process vent streams:

$$TRE = \frac{[a + bW^{.88} + cW + dWH + eW^{.88}H^{.88} + fW^{.5}]}{E}$$

where,

TRE = total resource effectiveness value;

E = maximum hourly VOC emission rate at the vent stream design flowrate (W), in kilograms of VOC per hour (kg/hr);

W = vent stream design flowrate at a standard temperature of twenty degrees Celsius, in standard cubic meters per minute (scm/min);

H = vent stream net heating value, as determined in accordance with paragraph (P)(2) of rule 3745-21-10 of the Administrative Code; in mega joules per standard cubic meter (10^6J/scm); and a, b, c, d, e, and f = applicable coefficients from appendix B to this rule.

(ii) For nonchlorinated process vent streams with a net heating value greater than 3.6:

$$TRE = \frac{[a + bW^{.88} + cW + dWH + eW^{.88}H^{.88} + f(WH/3.6)^{.5}]}{E}$$

where TRE, E, W, H, a, b, c, d, e and f are defined as in paragraph (EE)(3)(a)(i) of this rule.

(b) The parameters used in the total resource effectiveness equations shall be measured at the outlet(s) of the final product recovery device(s) where VOC is reclaimed for beneficial reuse (recycle, sale or use in another part of the process).

(4) The exhaust gases from any combustion device installed to meet the requirements of paragraph (EE)(1) of this rule for a process vent stream containing chlorinated VOC shall be controlled by a scrubber which is designed and operated to remove at least ninety-nine per cent, by weight, of the hydrogen chloride formed during combustion, unless the owner or operator of the air oxidation process demonstrates to the satisfaction of the director that a lesser

control efficiency limitation is warranted based upon good engineering practices.

(FF) "The Steelcraft Manufacturing Company" or any subsequent owner or operator of "The Steelcraft Manufacturing Company" facility located at 9017 Blue Ash road, Cincinnati, Ohio shall comply with the following requirements by no later than the dates specified in paragraph (C)(40) of rule 3745-21-04 of the Administrative Code:

(1) The VOC content of the adhesive coatings employed in the adhesive coating line for steel door panels and in the adhesive coating line for honeycomb paper shall not exceed 0.7 pound of VOC per gallon of adhesive coating, excluding water and exempt solvents.

(2) The uncontrolled VOC emissions from the steel door wipe cleaning operation shall be reduced and maintained below fourteen tons per year. The owner or operator shall keep monthly records which document the quantity and composition of the solvents used in the door wiping operation. These records shall be maintained at the facility for a period of three years. The owner or operator shall notify the director of any annual VOC emission rate that exceeds fourteen tons per year. A copy of the record showing the exceedance shall be submitted to the director within thirty days after the exceedance occurs.

(GG) "Chevron U.S.A., Inc." or any subsequent owner or operator of the "Chevron U.S.A., Inc." barge loading facility located at state route 128 and U.S. route 50 in Hamilton county, Ohio shall not cause, allow or permit the transfer of gasoline at the barge loading facility after the date specified in paragraph (C)(41) of rule 3745-21-04 of the Administrative Code unless all of the following requirements are met:

(1) The loading rack is equipped with a vapor collection system whereby during the transfer of gasoline to any barge, all vapors displaced from the barge during loading are vented only to a vapor collection system.

(2) The loading rack is equipped with a vapor control system whereby:

(a) All vapors collected by the vapor collection system are vented to the vapor control system;

(b) The mass emissions of VOC from the vapor control system do not exceed 0.29 pound of VOC per thousand gallons (thirty-five milligrams of VOC per liter) of gasoline loaded into the barge, as determined under paragraph (C) of rule 3745-21-10 of the Administrative Code; and

(c) Any liquid gasoline returned to a stationary storage tank from the vapor control system is free of entrained air to the extent possible with good engineering design.

(3) A means is provided to prevent drainage of gasoline from the loading device when it is not in use or to accomplish complete drainage before the loading device is disconnected.

(4) All gasoline loading lines and vapor lines are equipped with fittings which are vapor tight.

(5) Any leak from the vapor collection system and vapor control system which is equal to or greater than one hundred per cent of the lower explosive limit as propane, as determined under paragraph (K) of rule 3745-21-10 of the Administrative Code, is repaired within fifteen days of detection.

(6) A leak inspection of the vapor collection system and vapor control system shall be performed on a quarterly basis in accordance with paragraph (K) of rule 3745-21-10 of the Administrative Code. The following information for each leak inspection shall be maintained at the facility for a period of three years:

(a) The date of each leak inspection;

(b) A description of the findings, including, but not limited to a description of the location, nature, and severity of each leak;

(c) The leak determination method;

(d) A description of the corrective action taken, including the date each leak was repaired; and

(e) The inspector's name and signature.

(HH) Surface coating of automotive/transportation and business machine plastic parts.

For any source subject to paragraph (HH) of this rule, the requirement to comply with paragraph (HH) of this rule shall terminate at such time the source becomes subject to and complies with rule 3745-21-26 of the Administrative Code.

(1) Except as otherwise provided in paragraph (B)(6) of this rule, no owner or operator of a coating line for automotive/transportation plastic parts may cause, allow or permit the discharge into the ambient air of any VOCs after the date specified in paragraph (C)(42) of rule 3745-21-04 of the Administrative Code in excess of the VOC-content limitations specified in table 1. If a control system is employed for the coating line, the applicable limitation expressed in terms of pounds of VOC per gallon of solids shall be met by the owner or operator.

-Table 1: VOC limitations for coatings used for automotive/transportation plastic parts.-

Type of coating	VOC content limitation (in pounds of VOC per gallon	VOC content limitation (in pounds of VOC per gallon

	of coating, excluding water and exempt solvents, as applied)	of solids, as applied, for a coating system that employs a control system)
(1) Auto interiors		
(a) High bake colorcoat	4.1	9.3
(b) High bake primer	3.8	7.9
(c) Low bake colorcoat	3.2	5.7
(d) Low bake primer	3.5	6.7
(2) Auto exteriors (flexible and non-flexible)		
(a) High bake		
(i) Colorcoat	4.6	12.3
(ii) Clearcoat	4.3	10.3
(iii) Primer-flexible	5.0	15.6
(iv) Primer-non-flexible	4.5	11.6
(b) Low bake		
(i) Primer	5.5	21.7
(ii) Colorcoat red and black	5.6	23.4
(iii) Colorcoat others	5.1	16.6
(iv) Clearcoat	4.5	11.6
(3) Auto specialty		
(a) Vacuum metallizing basecoats and texture basecoats	5.5	21.7
(b) Black coatings, reflective argent coatings, air bag cover coatings, and soft coatings	5.9	29.8
(c) Gloss reducers, vacuum metallizing topcoats, and texture topcoats	6.4	49.2
(d) Stencil coatings, adhesion primers, ink pad coatings, electrostatic prep coatings, and resist coatings	6.8	89.5
(e) Headlamp lens coatings	7.4	(not applicable)

(2) Except as otherwise provided in paragraph (B)(6) of this rule, no owner or operator of a coating line for business machine plastic parts may cause, allow or permit the discharge into the ambient air of any VOCs after the date specified in paragraph (C)(42) of rule 3745-21-04 of the Administrative Code in excess of the VOC content limitations specified in table 2. If a control system is employed for the coating line, the applicable limitation expressed in terms of pounds of VOC per gallon of solids shall be met by the owner or operator.

-Table 2: VOC limitations for coatings used for business machine plastic parts.-

Type of coating	VOC content limitation (in pounds of VOC per gallon of coating, excluding water and exempt solvents)	VOC content limitation (in pounds of VOC per gallon of solids, for a coating line that employs a control system)
(1) Primer	1.2	1.4
(2) Colorcoat (non-texture coat)	2.3	3.3
(3) Colorcoat (texture coat)	2.3	3.3
(4) Electromagnetic interference/radio frequency interference (EMI/RFI) shielding coatings	4.0	8.8
(5) Specialty coatings		
(a) Soft coatings	4.3	10.3
(b) Plating resist	5.9	29.8
(c) Plating sensitizer	7.1	202.9

(II) "International Paper Company" or any subsequent owner or operator of the "International Paper Company" facility located at 100 Progress place, Springdale, Ohio shall comply, by March 31, 1993, with the following requirements:

(1) The VOC contents of the coatings employed in any sheet-fed offset lithographic printing press shall not exceed the following limitations:

(a) 2.8 pounds of VOC per gallon of coating, excluding water and exempt solvents, for any varnish coating;

(b) 3.0 pounds of VOC per gallon of coating, excluding water and exempt solvents, for any aqueous coating;

(c) 1.2 pounds of VOC per gallon of coating, excluding water and exempt solvents, for any ink, excluding any metallic ink; and

(d) 2.5 pounds of VOC per gallon of coating, excluding water and exempt solvents, for any metallic ink.

(2) The fountain solution employed in any sheet-fed offset lithographic printing press shall be refrigerated at each cooling unit to a temperature not to exceed sixty degrees Fahrenheit and shall have a VOC content not greater than 8.5 per cent VOC (alcohol) by volume at each cooling unit. The owner or operator shall measure the temperature and VOC content, in per cent by volume, of the fountain solution in each cooling unit on a daily basis, and shall maintain records of the results of the measurements at the facility for a period of three

years. The VOC content of the fountain solution shall be measured using a hydrometer.

(3) The total VOC emissions from the metallic inks employed in all sheet-fed offset lithographic printing presses shall not exceed 0.258 ton during any calendar month and 2.32 tons during any period of twelve consecutive months. The owner or operator shall calculate the calendar month and rolling twelve-month VOC emissions from the metallic inks employed in all of the sheet-fed offset lithographic printing presses and shall maintain records of the results of the calculations at the facility for a period of three years.

(4) The owner or operator shall notify the director of any temperature measurement of the fountain solution that exceeds sixty degrees Fahrenheit, any VOC content measurement of the fountain solution that exceeds 8.5 per cent, by volume, and any monthly and rolling twelve-month VOC emission from the use of metallic inks that exceeds 0.258 ton and 2.32 tons, respectively. A copy of the record showing the exceedance shall be submitted to the director within forty-five days after the exceedance occurs.

(JJ) "The Goodyear Tire and Rubber Company" or any subsequent owner or operator of "The Goodyear Tire and Rubber Company" facility located at 1376 Tech Way drive, Akron, Ohio shall comply, on and after May 25, 1988, with the following requirements:

(1) The VOC emissions from the nitrile-butadiene rubber production operation shall be controlled by employing a continuous steam stripper following the degassing vessels to maximize the removal of residual monomers (acrylonitrile and butadiene). The continuous steam stripper shall be designed and operated to achieve a residual monomer content, as determined by "Goodyear Method E-826," of not greater than nine hundred parts per million by weight (total acrylonitrile and butadiene) in the polymer (rubber) blend tanks immediately following the stripper, and all exhaust gases from the stripper shall be vented to the butadiene recovery operation or to a flare system which complies with the requirements of paragraphs (DD)(10)(d), (DD)(10)(e), and (DD)(10)(f) of this rule. The owner or operator shall perform daily analyses of the residual monomer content in the polymer blend tanks and shall maintain records of the results of the analyses at the facility for a period of three years. An alternative method and/or procedure to that in "Goodyear Method E-826" may be used to demonstrate compliance with the above limitation provided that such method or procedure is in accordance with good engineering practice, authorized in writing by the director, and approved by the U.S. environmental protection agency as a revision to the state implementation plan. The owner or operator shall notify the director of any residual monomer content that exceeds nine hundred parts per million by weight. A copy of the record showing the exceedance shall be submitted to the director within forty-five days after the exceedance occurs.

(2) The VOC emissions from the butadiene recovery operation shall be vented to a flare system which complies with the requirements of paragraphs (DD)(10)(d), (DD)(10)(e), and (DD)(10)(f) of this rule.

(KK) "Morton Thiokol, Inc." or any subsequent owner or operator of the "Morton Thiokol, Inc." facility located at 2000 West street, Cincinnati, Ohio shall comply, on and after May 25, 1988, with the following requirements for VOC emissions from the production of methyltin intermediates:

(1) Each process used for the production of methyltin intermediates shall be equipped with a VOC recovery system which is designed and operated to achieve a control efficiency of at least seventy per cent, by weight, as a weekly average for the seven-day period from Monday through Sunday, for the VOC emissions in the process vent gas, as determined under paragraph (C) of rule 3745-21-10 of the Administrative Code. The owner or operator shall on a daily basis determine the amount of VOC vented to the VOC vapor recovery system from the processes and the amount of VOC recovered. The overall recovery efficiency shall be calculated each week as the ratio of the total recovered VOC for the seven-day period from Monday through Sunday to the total VOC vented to the VOC recovery system for the same seven-day period. The ratio shall be expressed as a percentage. The ratio shall be calculated not later than the Monday following each seven-day period, and the owner or operator shall maintain records of the calculations at the facility for a period of three years. The owner or operator shall notify the director of any weekly average control efficiency that is less than seventy per cent, by weight. A copy of the record showing the noncomplying weekly average control efficiency shall be submitted to the director within thirty days of the occurrence.

(2) The railcar unloading operation shall be a closed-loop system that uses compressed VOC from storage, rather than nitrogen, to unload the VOC in the railcar.

(LL) "The Lubrizol Corporation" or any subsequent owner or operator of "The Lubrizol Corporation" facility located at 155 Freedom road, Painesville, Ohio shall comply with the following requirements for VOC emissions from reactor processes no later than the date specified in paragraph (C)(46) of rule 3745-21-04 of the Administrative Code:

(1) Except where exempted under paragraph (LL)(3) of this rule, any reactor process vent stream shall be vented to one of the following control equipment:

(a) The control equipment is an enclosed combustion device that is designed and operated:

(i) To reduce the VOC emissions vented to it with an efficiency of at least ninety-eight per cent by weight or to emit VOC at a concentration not

exceeding twenty parts per million by volume (dry basis), either of which is determined under paragraph (C) of rule 3745-21-10 of the Administrative Code; or

(ii) To provide a minimum residence time of 0.75 second at a minimum temperature of sixteen hundred degrees Fahrenheit.

(b) The control equipment is a flare that meets the requirements of paragraphs (DD)(10)(d), (DD)(10)(e), and (DD)(10)(f) of this rule.

(2) Any process wastewater stream from a reactor process shall be discharged to a wastewater separator that has all separator sections equipped with covers and seals which minimize the amount of VOC exposed to the ambient air.

(3) Exempted from the requirements of paragraph (LL)(1) of this rule are the following reactor process vent streams:

(a) The reactor process vent stream is not vented to an enclosed combustion device or flare and has a VOC emission rate less than five tons per year. If the reactor process has more than one of these reactor process vent streams, the VOC emission rate shall be based upon a combination of such reactor process vent streams. In such cases, the owner or operator shall calculate the calendar month and rolling twelve-month VOC emissions from the reactor process vent streams and maintain records of the results of the calculations at the facility for a period of three years. The owner or operator shall notify the director of any rolling twelve-month VOC emission calculation that exceeds five tons. A copy of the record showing the exceedance shall be submitted to the director within thirty days after the exceedance occurs.

(b) The reactor process vent stream is vented to an enclosed combustion device or a flare for which construction commenced prior to May 25, 1988, provided the enclosed combustion device or flare is operated and maintained in accordance with design specifications. This exemption shall terminate for such reactor process vent stream if the enclosed combustion device or flare is replaced with new control equipment for which construction commenced on or after May 25, 1988.

(c) The reactor process vent stream is an air bearing vent stream which has a VOC concentration between the lower explosive limit and the upper explosive limit and which has a total resource effectiveness value greater than 1.0, as determined under paragraph (EE)(3) of this rule. If the reactor process has more than one of these air bearing process vent streams, the total resource effectiveness value shall be based upon a combination of such reactor process vent streams.

(MM) "PPG Industries, Inc." or any subsequent owner or operator of the "PPG Industries, Inc." facility located at 3800 West 143rd street, Cleveland, Ohio shall comply, on and after May 25, 1988, with the following requirements for the VOC emissions from the paint manufacturing operations and associated paint laboratory operations:

(1) The paint manufacturing operations shall include the following equipment for the processing or use of solvent based or waterbased paint materials: mixing tanks for paint liquids and pigments, grinding mills, paint thinning and tinting tanks, paint filling equipment for shipping containers, cleaning equipment for paint processing equipment, and recovery equipment for the cleaning solvents. The paint laboratory operations shall include the following equipment for the processing or use of solvent based or waterbased paint materials: paint spray booths and associated ovens within the paint manufacturing quality control laboratory and the paint research laboratory.

(2) Except as otherwise provided in paragraph (MM)(4) of this rule, the VOC emissions from the equipment included within the paint manufacturing operations shall be vented either directly or by means of a building or local area exhaust to a control system which shall maintain compliance with any of the following requirements:

(a) A minimum control efficiency of 98.0 per cent by weight for the VOC emissions;

(b) A maximum outlet VOC concentration of twenty parts per million by volume (dry basis); or

(c) A minimum incineration temperature of one thousand five hundred degrees Fahrenheit.

(3) Except as otherwise provided in paragraph (MM)(4) of this rule, the VOC emissions from the equipment included within the paint laboratory operations shall be vented to a control system which shall maintain compliance with a minimum control efficiency of ninety per cent by weight for the VOC emissions or a maximum outlet VOC concentration of twenty parts per million by volume (dry basis).

(4) The requirements of paragraphs (MM)(2) and (MM)(3) of this rule shall not apply to any specific piece of equipment included within the paint manufacturing operations or the paint laboratory operations during each of the following situations:

(a) During any period in which there is no production activity or laboratory activity at said equipment; and

(b) During the processing or use of a waterbased paint material in said equipment, provided the following three conditions are met:

(i) The equipment is dedicated solely to the production of waterbased paint materials;

(ii) The VOC content of the waterbased paint material is less than or equal to 12.0 per cent VOC by weight, as determined under paragraph (B) of rule 3745-21-10 of the Administrative Code; and

(iii) Any VOC emissions from the processing or use of the waterbased paint material that are not vented to the control systems specified in paragraphs (MM)(2) and (MM)(3) of this rule are included (accounted for) in a permit-to-install issued by the director after August 22, 1990 pursuant to Chapter 3745-31 of the Administrative Code.

(5) The VOC control efficiency or outlet VOC concentrations shall be determined in accordance with paragraph (C) of rule 3745-21-10 of the Administrative Code.

(6) For a control system identified in paragraph (MM)(2) or (MM)(3) of this rule that employs incineration, the incineration temperature shall be determined by means of a continuous measurement and recording of such temperature.

(7) Any mixing or blending tank containing a paint material shall be equipped with a cover or lid that completely covers the opening of the tank, except for an opening no larger than necessary to allow for safe clearance for the mixer's shaft. Such tank shall be covered at all times in which the tank contains a paint material except when operator access is necessary to add ingredients or take samples.

(8) For any specific piece of equipment included within the paint manufacturing operations or the paint laboratory operations, for which the owner or operator claims an exemption from the requirements of paragraphs (MM)(2) and (MM)(3) of this rule, pursuant to paragraph (MM)(4) of this rule, the owner or operator shall keep daily records of the following information:

(a) The periods of time during which there is no production activity or laboratory activity; and

(b) The VOC content of the waterbased paint material (in per cent VOC, by weight), and, if applicable, the application number for the permit to install which authorizes the use of the waterbased paint materials.

(9) The owner or operator shall maintain the records required by paragraphs (MM)(6) and (MM)(8) of this rule at the facility for a period of three years.

(NN) "Von Roll USA, Inc." or any subsequent owner or operator of the "Von Roll USA, Inc." facility located at 4853 West 130th street, Cleveland, Ohio shall not cause, allow or permit the discharge into the ambient air of any VOC from any mica coating or laminating line after the date specified in paragraph (C)(48) of rule 3745-21-04 of the Administrative Code unless the following requirements are met:

(1) Except as provided in paragraph (NN)(2) of this rule, each mica coating or laminating line shall be equipped with a VOC emission control system that is designed and operated to achieve a capture efficiency of one hundred per cent and a control destruction efficiency of at least ninety-five per cent, by weight, for all the VOC emissions from the mica coating or laminating line. To meet the one hundred per cent capture efficiency requirement, each mica coating or laminating line shall employ a permanent total enclosure that complies with the requirements of USEPA method 204 and the requirements of paragraph (NN)(3) of this rule. For the VOC control device, the VOC control (destruction) efficiency shall be determined in accordance with paragraph (C) of rule 3745-21-10 of the Administrative Code.

(2) The requirements of paragraph (NN)(1) of this rule shall not apply to any mica coating or laminating line which employs less than five tons of VOC per year. In such case, the owner or operator shall keep monthly records that document the VOC emissions from the mica coating or laminating line. These records shall be maintained at the facility for a period of three years. The owner or operator shall notify the director of any annual VOC emission rate that equals or exceeds five tons per year. A copy of the record showing the exceedance shall be submitted to the director within thirty days after the exceedance occurs.

(3) Each permanent total enclosure shall be maintained under negative pressure at a minimum differential pressure of 0.007 inch of water, as a three-hour average, at all times when the mica coating or laminating line is in operation.

(4) Monitoring devices and a recorder shall be employed to simultaneously and continuously measure and record the pressure inside and outside each permanent total enclosure. The monitoring and recording devices shall be calibrated, operated and maintained in accordance with the manufacturer's recommendations, with any modifications deemed necessary by the permittee.

(5) The owner or operator shall submit quarterly, deviation (excursion) reports that identify all three-hour blocks of time during which each permanent total enclosure was not maintained at the minimum pressure differential of 0.007 inch of water, as a three-hour average.

(OO) "Armco Steel Company, L.P." or any subsequent owner or operator of the "Armco Steel Company, L.P. facility at 1801 Crawford street, Middletown, Ohio shall comply, on and after May 25, 1988, with the following VOC content limitations for

the metal coil treatment operations, as determined under paragraph (B) of rule 3745-21-10 of the Administrative Code:

(1) The VOC content of any rolling oil employed in the temper mills shall not exceed 6.9 pounds of VOC per gallon of oil, excluding water and exempt solvents.

(2) The VOC content of any rust preventive oil employed in the temper mills, shears, corrective rewinds, slitters, coating lines, and the pickle lines shall not exceed 3.3 pounds of VOC per gallon of oil, excluding water and exempt solvents.

(3) The VOC content of any anti-galling material employed in the aluminum coating operation shall not exceed 1.2 pounds of VOC per gallon of material, excluding water and exempt solvents.

(4) The VOC content of any prelube oil employed at the facility shall not exceed 0.8 pound of VOC per gallon of oil, excluding water and exempt solvents.

(PP) "Formica Corporation" or any subsequent owner or operator of the "Formica Corporation" facility located at 10155 Reading road, Cincinnati, Ohio shall comply, on and after May 25, 1988, with the following requirements for the VOC emissions from each paper treater:

(1) The VOC content of any coating employed in the paper treater shall not exceed 0.9 pound of VOC per gallon of coating, excluding water and exempt solvents, as determined under paragraph (B) of rule 3745-21-10 of the Administrative Code; or

(2) The paper treater shall be equipped with a capture system and control system which are designed and operated to achieve an overall control efficiency of at least eighty-five per cent by weight for the VOC emissions, as determined under paragraph (C) of rule 3745-21-10 of the Administrative Code.

(QQ) "The Day-Glo Color Corp." or any subsequent owner or operator of "The Day-Glo Color Corp." facility located at 4515 St. Clair avenue, Cleveland, Ohio, shall comply with the following requirements by no later than the date specified in paragraph (C)(51) of rule 3745-21-04 of the Administrative Code:

(1) The filtration process which separates the methanol from the solid dye shall be a vacuum system which consists of a vacuum pump and condenser.

(2) Each mixing vessel having a capacity of four hundred gallons or less shall be equipped with a lid that remains in place at all times unless the vessel is empty or being emptied. The lid shall maintain contact along the entire perimeter of the vessel's rim and shall have no openings except as follows:

(a) The opening for the mixer shaft shall be no larger than three inches in diameter.

(b) Any opening used for the addition of materials to the vessel shall be no more than one-fourth of the lid area in size and shall remain open only during the addition of materials.

(RR) On and after March 12, 2006, "Sherwin-Williams Diversified Brands, Incorporated" or any subsequent owner or operator of the "Sherwin-Williams Diversified Brands, Incorporated" facility located at 26300 Fargo avenue, Bedford Heights, Ohio shall comply with the requirements of paragraphs (RR)(1) to (RR)(8) of this rule.

(1) For the liquid mixing tanks, can liquid filling operations, gasser (gashouse) operations (can propellant filling operations and propellant line purging operations), can brushing operations (manual can cleaning operations), and can piercing operations at this facility, the total VOC emissions in any rolling twelve-month period shall not exceed 0.75 pound of VOC per one thousand aerosol cans produced.

(2) When a gashouse production line is in VOC operation, all VOC emissions from the gashouse production line, except during a safety diversion or emergency described under paragraph (RR)(8) of this rule, shall be vented to a thermal incinerator that is designed and operated with a destruction efficiency greater than or equal to ninety per cent by weight for VOC. A gashouse production line is in VOC operation when either the propellant being used to fill the aerosol cans contains VOC or the propellant being purged from the propellant line contains VOC. The VOC propellant being purged shall be recovered and stored in a fuel tank of the thermal incinerator."

(3) The average combustion temperature within the thermal incinerator, for any three-hour block of time when the gashouse is vented to the thermal incinerator, shall not be more than fifty degrees Fahrenheit below the average combustion temperature during the most recent emissions test of the thermal incinerator that demonstrated compliance with the VOC destruction efficiency specified in paragraph (RR)(2) of this rule.

(4) Monitoring and recordkeeping.

(a) Continuous monitoring devices.

(i) The owner or operator shall install, operate, and maintain a continuous temperature monitor and recorder that measures and records the combustion temperature within the thermal incinerator. The temperature monitor shall have a minimum accuracy of plus or minus one per cent of the temperature being monitored expressed in degrees Fahrenheit or plus or minus one degree Fahrenheit, whichever is

greater. The temperature monitor and recorder shall be installed, calibrated, operated and maintained in accordance with the manufacturer's recommendations, with any modifications deemed necessary by the owner or operator.

(ii) The owner or operator shall install, operate, and maintain a lower explosive limit (LEL) monitoring system that continuously measures and records the concentration of VOC and percent LEL within each gashouse line and the inlet vent to the thermal incinerator. The LEL detectors shall have a minimum accuracy or plus or minus two per cent. The LEL detectors shall be installed, calibrated, operated and maintained in accordance with the manufacturer's recommendations. The owner or operator shall calibrate the LEL detectors once per month following the manufacturer's protocol and shall record the date and results of each calibration.

(iii) The owner or operator shall install, operate, and maintain mass flow meter that continuously measures and records the flow rate within each gashouse line. The mass flow meters shall have a minimum accuracy of plus or minus 1.5 per cent. The mass flow meters shall be installed, calibrated, operated and maintained in accordance with the manufacturer's recommendations. The owner or operator shall check the mass flow meters once every six months for accuracy using a pilot tube and shall record the date and results of each accuracy check.

(b) The owner or operator shall collect and record the following information for each day of gashouse operation:

(i) A log of operating time for each of the following: gashouse production line ventilation to the thermal incinerator, gashouse production line ventilation directly to ambient air, thermal incinerator operation, temperature monitoring equipment operation, gashouse production line in VOC operation, and gashouse production line not in VOC operation.

(ii) A log of all three-hour blocks of time during which the average combustion temperature within the thermal incinerator, when the gashouse was vented to the thermal incinerator, was more than fifty degrees Fahrenheit below the average combustion temperature during the most recent emissions test of the thermal incinerator that demonstrated compliance with the VOC destruction efficiency requirement specified in paragraph (RR)(2) of this rule.

(iii) A log of the dates and times of the bypass venting of gashouse emissions to ambient air and any downtime for the thermal incinerator and temperature monitoring equipment, when any gashouse production

line is in VOC operation. Additional records on bypass venting due to safety diversions are specified under paragraph (RR)(4)(h) of this rule.

(c) The owner or operator shall collect and record for each aerosol can production line at this facility the following production information each month:

(i) Number of aerosol cans produced.

(ii) Name and amount (pounds) of each VOC liquid charged to the mixing tanks and filled into aerosol cans.

(iii) Number of aerosol cans filled with a VOC propellant by name of propellant, type of propellant filler (under-the-cup fill, needle fill, or Sepro fill), and type of emissions venting (vented to thermal incinerator or not vented to thermal incinerator).

(iv) Number of VOC propellant line purges by name of propellant, type of recovery (recovered for fuel tank of thermal incinerator or not recovered), and type of emissions venting (vented to thermal incinerator or not vented to thermal incinerator).

(v) Name and amount (pounds) of each VOC liquid (solvent) used in the manual aerosol can cleaning operation (can brushing operation).

(vi) Number of safety diversion events and number of emergency events, as described in paragraph (RR)(8)(a) of this rule.

(d) The owner or operator shall collect and record the following chemical and physical properties for the VOC liquids and VOC propellants used in the aerosol can production lines of this facility:

(i) For any VOC liquid used in liquid mixing and liquid filling of aerosol cans, the liquid name, the liquid density (pounds per gallon), and the vapor pressure (mmHg) at seventy degrees Fahrenheit and eighty degrees Fahrenheit.

(ii) For any VOC liquid used in manual aerosol can cleaning, the liquid name and the liquid density (pounds per gallon).

(iii) For any VOC propellant, the liquid density (pounds per gallon) under usual propellant storage temperature and pressure, the vapor density (pounds per cubic centimeter) at propellant filler temperature, the fraction VOC by weight, the molecular weight, and the lower explosive limit (LEL) concentration (ppmv).

(e) The owner or operator shall calculate and record for each aerosol can production line at this facility the following information each month:

(i) Monthly amount of VOC emissions (pounds) from the liquid mixing operations, as determined in accordance with paragraph (RR)(6)(a) of this rule.

(ii) Monthly amount of VOC emissions (pounds) from the can liquid filling operations, as determined in accordance with paragraph (RR)(6)(b) of this rule.

(iii) Monthly amount of VOC emissions (pounds) from the gashouse operations (propellant filling, propellant line purging, and safety diversions), as determined in accordance with paragraph (RR)(6)(c) of this rule.

(iv) Monthly amount of VOC emissions (pounds) from the manual aerosol can cleaning operations (can brushing operations), as determined in accordance with paragraph (RR)(6)(d) of this rule.

(v) Monthly amount of VOC emissions (pounds) from the aerosol can production line, which is the sum of data recorded under paragraphs (RR)(4)(e)(i) to (RR)(4)(e)(iv) of this rule.

(f) The owner or operator shall collect and record for each can piercing operation at this facility the following information each month:

(i) The monthly operation of aerosol cans pierced, categorized by type of product/propellant and size.

(ii) For each category of aerosol can identified under paragraph (RR)(4)(f)(i) of this rule, the name and amount (pounds per can) of VOC liquid (solvent) and VOC propellant contained within the aerosol can.

(iii) For each VOC liquid, the vapor pressure (mmHg) at eighty degrees Fahrenheit and the molecular weight (pounds per pound mole).

(iv) The monthly amount of VOC emissions (pounds) from can piercing operations, as determined in accordance with paragraph (RR)(6)(e) of this rule.

(g) The owner or operator shall record for all aerosol can production lines and can piercing operations combined at this facility the following information each month:

(i) The monthly amount of VOC emissions (pounds), which is a sum of the monthly VOC emissions recorded under paragraphs (RR)(4)(e)(v) and (RR)(4)(f)(iv) of this rule for each aerosol can production line and each can piercing operation, respectively.

(ii) The monthly number of aerosol cans produced, which is a sum of the monthly aerosol can production recorded under paragraph (RR)(4)(c)(i) of this rule for each aerosol can production line.

(iii) The amount of VOC emissions (pounds) during the rolling twelve-month period, which is the sum of the values recorded under paragraph (RR)(4)(g)(i) of this rule for this month and the previous eleven consecutive months.

(iv) The number of aerosol cans produced during the rolling twelve-month period, which is the sum of the values recorded under paragraph (RR)(4)(g)(ii) of this rule for this month and the previous eleven consecutive months.

(v) The VOC emissions rate during the rolling twelve-month period in pounds per one thousand cans, which is one thousand times the value from paragraph (RR)(4)(g)(iii) of this rule divided by the value from paragraph (RR)(4)(g)(iv) of this rule, and rounded to two decimal places.

(h) The owner or operator shall collect and record for each aerosol can production line at this facility, the following information for each safety diversion event, as described in paragraph (RR)(8) of this rule:

(i) Twenty per cent LEL stamp, which indicates that a concentration between twenty per cent and forty per cent of the LEL occurred;

(ii) Date and time of the twenty per cent LEL stamp;

(iii) Event length (seconds);

(iv) Type of VOC propellant being employed in the gashouse;

(v) Average concentration of LEL detectors in gashouse line (ppmv);

(vi) Average flow rate (cfm); and

(vii) Amount of VOC emissions (pounds).

(i) The records required by paragraphs (RR)(4)(a) to (RR)(4)(h) of this rule shall be maintained for a minimum of five years and shall be available for review

by the director or any authorized representative of the director during normal business hours.

(5) Reporting.

(a) The owner or operator shall submit quarterly compliance status reports:

(i) That identify any emission rate violation in which the emission rate recorded under paragraph (RR)(4)(g)(v) of this rule exceeds the VOC emission limitation specified in paragraph (RR)(1) of this rule;

(ii) That identify any deviations of the requirements specified in paragraphs (RR)(2) and (RR)(3) of this rule, as recorded under paragraphs (RR)(4)(b)(iii) and (RR)(4)(b)(ii) of this rule, respectively; and

(iii) That provide summaries of the records specified under paragraphs (RR)(4)(a) to (RR)(4)(h) of this rule.

(b) The owner or operator shall submit to the appropriate Ohio EPA district office or local air agency the quarterly compliance status reports specified in paragraph (RR)(5)(a) of this rule. These quarterly compliance status reports shall be submitted by April thirtieth, July thirty-first, October thirty-first, and January thirty-first and shall cover the records for the previous calendar quarters.

(6) Determination of VOC emissions.

(a) VOC emissions from liquid mixing operations.

(i) For liquid mixing operations, the monthly VOC emissions (pounds), E(mixing), shall be calculated as follows:

E(mixing) = E(loading) + (E)venting

where:

E(loading) = monthly VOC emissions from loading VOC liquids into mixing tanks

E(venting) = monthly VOC emissions from venting VOC liquids during mixing

(ii) For loading VOC liquid into a mixing tank, the monthly VOC emissions shall be calculated, based on the ideal gas law and displacement of saturated vapors at seventy degrees Fahrenheit (twenty-one degrees Celsius), as follows:

E(loading) = monthly sum of Ei(loading) for all VOC liquid "i" loaded into mixing tanks

Ei(loading) = (Pi * Xi * Vi * MWi)/ (R * T)

where:

Ei(loading) = pounds of VOC emissions during the month from loading VOC liquid "i" into mixing tanks

Pi = vapor pressure of VOC liquid "i" at seventy degrees Fahrenheit, in mmHg

Xi = mole fraction of VOC liquid "i" in liquid mix (value of one is used for this emissions estimate)

Vi = volume of VOC liquid "i" charged to mixing tanks during the month in cubic feet (equals monthly gallons of liquid "i" divided by 7.48 gallons per cubic foot)

R = nine hundred ninety-nine mmHg-cubic feet per pound mole-degrees Kelvin

T = temperature in degrees Kelvin (equals two hundred seventy-three plus twenty-one degrees Celsius)

MWi = molecular weight of VOC liquid "i", in pounds per pound mole

(iii) For venting of VOC liquids during mixing, the monthly VOC emissions shall be calculated, based on the ideal gas law and venting of saturated vapors at eighty degrees Fahrenheit (twenty-seven degrees Celsius), as follows:

E(venting) = monthly sum of Ei(venting) for all VOC liquid "i" loaded into mixing tanks

Ei(venting) = (Pi * Xi * Vi,v * MWi) / (R * T)

where:

Ei(venting) = pounds of VOC emissions during the month for venting a VOC liquid "i" during mixing

Pi = vapor pressure of VOC liquid "i" at eighty degrees Fahrenheit, in mmHg

Xi = mole fraction of VOC liquid "i" in liquid mix (a value of one is used for this emissions estimate)

Vi,v = volume (cubic feet) of saturated vapors removed by the ventilation system during mixing of VOC liquid "i" (equals monthly gallons of VOC liquid "i" times five times thirty divided by three hundred fifty based on five per cent of the total ventilation flow rate or five cubic feet per minute, an average mixing time of thirty minutes per batch, and a typical batch size of three hundred and fifty gallons)

R = nine hundred ninety-nine mmHg-cubic feet per pound mole-degrees Kelvin

T = temperature in degrees Kelvin (equals two hundred seventy-three plus twenty-seven degrees Celsius)

MWi = molecular weight of VOC liquid "i", in pounds per pound mole

(iv) Alternative method.

An alternative method for calculating the monthly emissions rate for liquid mixing operations shall be as follows:

E(mixing) = EFM * V(mixing)

where:

EFM = emission factor of 0.00131 pound VOC per pound VOC liquid throughput (this emission factor is based on the highest annual average emission factor for mixing operations during 1997 to 2000)

V(mixing) = monthly throughput of VOC liquid employed for mixing, in pounds

(v) If for any month in which the use of the alternative method described in paragraph (RR)(6)(a)(iv) of this rule shows noncompliance with the VOC emission limit, the method described in paragraphs (RR)(6)(a)(i) to (RR)(6)(a)(iii) of this rule shall be used to calculate monthly emissions for liquid mixing operations. The compliance determination will then be based on these more detailed calculations.

(b) VOC emissions from liquid filling of aerosol cans.

(i) For the liquid filling of aerosol cans, the monthly VOC emissions (pounds) shall be calculated, based on the ideal gas law and

displacement of saturated vapors at seventy degrees Fahrenheit (twenty-one degrees Celsius) as follows:

E(filling) = monthly sum of Ei(filling) for all VOC liquid "i" filling of aerosol cans

Ei(filling) = (Pi * Xi * Vi * MWi) / (R * T)

where:

Ei(filling) = pounds of VOC emissions during the month for VOC liquid "i" filling of aerosol cans

Pi = vapor pressure of VOC liquid "i" at seventy degrees Fahrenheit, in mmHg

Xi = mole fraction of VOC liquid "i" in liquid fill (a value of one is used for this emissions estimate)

Vi = volume of VOC liquid "i" filled into aerosol cans during the month in cubic feet (equals monthly gallons of VOC liquid "i" divided by 7.48 gallons per cubic foot)

R = nine hundred ninety-nine mmHg-cubic feet per pound mole-degrees Kelvin

T = temperature in degrees Kelvin (equals two hundred seventy-three plus twenty-one degrees Celsius)

MWi = molecular weight of VOC liquid "i", in pounds per pound mole

(ii) Alternative method.

An alternative method for calculating the monthly emissions for liquid can filling operations shall be as follows:

E(filling) = EFF * V(filling)

where:

EFF = emission factor of 0.00026 pound VOC per pound VOC liquid throughput (this emission factor is based on the highest annual average emission factor for liquid can filling operations during 1997 to 2000)

V(filling) = monthly throughput of VOC liquid employed for can filling, in pounds

(iii) If for any month in which the use of the alternative method described in paragraph (RR)(6)(b)(ii) of this rule shows noncompliance with the VOC emission limit, the method described in paragraph (RR)(6)(b)(ii) of this rule shall be used to calculate monthly emissions for liquid filling of aerosol cans. The compliance determination will then be based on these more detailed calculations.

(c) VOC emissions from gasser (gashouse) operations.

(i) For the gasser operations, the monthly VOC emissions in pounds), EG(total), shall be calculated as follows:

EG(total) = EG(filling) + EG(purging) + EG(safety diversions)

where:

EG(filling) = monthly VOC emissions from filling aerosol cans with VOC propellant

EP(purging) = monthly VOC emissions from purging of lines containing VOC propellant

EG(safety diversions) = monthly VOC emissions from safety diversions of VOC control equipment

(ii) For the filling of aerosol cans with VOC propellant and the purging of lines containing VOC propellant, the monthly VOC emissions for filling and line purging shall be calculated as follows:

EG(filling) = monthly sum of (NCp,f,v) x (EFp,f) X (Kp) x (1 - Cep,v/100) x (VOCp)

EP(purging) = monthly sum of (NPp,v) x (Vp) x (LDp) x (1 - Rp) x (1 - CEp,v/100) x (VOCp)

where:

CEp,v = control efficiency for propellant "p" VOC emissions and type of venting "v" for those emissions, based on venting of VOC propellant emissions to thermal incinerator or not and the overall control efficiency of the thermal incinerator for VOC

CEp,v = zero per cent if propellant "p" VOC emissions are not vented to the thermal incinerator

CEp,v = overall VOC control efficiency from most recent compliance test of the thermal incinerator, if propellant "p" VOC emissions are vented to the thermal incinerator

EFp,f = emission factor for VOC propellant gas loss when filling cans with VOC propellant "p", based on propellant filler type "f" (under-the-cup fill, needle fill, or Sepro fill)

EFp,f = 0.2 cubic centimeters per can for needle filling of VOC propellant "p"

EFp,f = 1.00 cubic centimeters per can for Sepro filling of VOC propellant "p"

EFp,f = 1.75 cubic centimeters per can for under-the-cup filling of VOC propellant "p"

Kp = conversion factor for gaseous VOC propellant "p" expressed in pounds per cubic centimeter at standard conditions

LDp = liquid density of VOC propellant "p" at storage temperature and pressure, in pounds per gallon

NCp,f,v = number of cans produced with VOC propellant "p" and filling type "f" during the month by type of venting "v" (vented to thermal incinerator or not vented to thermal incinerator)

NPp,v = number of propellant line purges during the month for VOC propellant "p" by type of venting "v" (vented to thermal incinerator or not vented to thermal incinerator)

Rp = fraction by weight of purged VOC propellant "p" which is recovered and stored in a pressure tank

Vp = volume of propellant line purged for VOC propellant "p", in gallons

VOCp = fraction VOC by weight for VOC propellant "p" (usually one for a VOC containing propellant)

(iii) Alternative method for filling and line purging.

For gasser operations equipped with a thermal incinerator in which the VOC emissions from the filling of aerosol cans with VOC propellant are vented to the thermal incinerator and the line purging of VOC propellant is recovered for use as a fuel in the thermal incinerator, the

monthly VOC emissions for filling and line purging shall be calculated as follows:

EG(filling) + EG(purging) = EF * (NC/1000)

where:

EF = VOC emissions factor from most recent compliance test of the thermal incinerator, expressed in pounds VOC per thousand aerosol cans produced (based on the September 24, 2002 compliance test, EF equals 0.16 pound VOC per thousand aerosol cans)

NC = number of aerosol cans produced with VOC propellant during the month

(iv) EG(safety diversions) is the sum of the VOC emissions for each safety diversion event during the month, as determined in accordance with paragraph (RR)(8) of this rule. The amount of VOC emissions in pounds for a safety diversion event EG(event) shall be calculated as follows:

$EG(event) = C_{avg} * MW * Flow * Time * (4.256 \times 10^{-11})$

where:

C_{avg} = average concentration of VOC propellant in gas stream being vented to ambient air during safety diversion event, in parts per million by volume

MW = molecular weight of VOC propellant being employed in gashouse at time of safety diversion event, in pounds per pound-mole

Flow = average flow rate of gas stream being vented to ambient air during safety diversion event, in cubic feet per minute

Time = length of safety diversion event, in seconds

4.256×10^{-11} = constant value based on various unit conversions and division by the Universal Gas Constant at standard conditions

(d) VOC emissions from manual aerosol can cleaning operations.

For the manual aerosol can cleaning operations (can brushing operations), VOC emissions shall be equal to the mass of VOC solvent consumed in the operation. The monthly VOC emissions from can brushing shall be calculated as the sum of VOC emissions for all solvents consumed during

that month. The VOC emissions from each VOC solvent consumed is calculated as the number of VOC solvent gallons consumed during the month times the VOC solvent density (pounds per gallon).

(e) VOC emissions from can piercing operations.

(i) For the can piecing operations, monthly VOC emissions shall be the total VOC emissions from propellants plus the total VOC emissions from liquid recovery.

(ii) The total VOC emissions (pounds) from propellants is the sum of the amount of VOC propellant within all cans pierced during that month. For a grouping of pierced cans by type and size, the monthly amount of VOC propellant is calculated as the amount of propellant VOC per can (pounds VOC per can), which is based on the type and size category, times the number of cans pierced during the month for that type and size category.

(iii) The total VOC emissions (pounds) from liquid recovery for all cans pierced during a month is the sum of VOC emissions from the liquids (solvents) within all cans pierced during that month. The VOC emissions from the liquids shall be calculated, based on the ideal gas law and displacement of saturated vapors at eighty degrees Fahrenheit (twenty-seven degrees Celsius) for liquid flowing into a recovery drum or vessel, using the following formulas:

E(piercing) = sum of Ei(piercing) for all VOC liquid "i" within the cans pierced in the month

Ei(piercing) = (Pi * Xi * Vi * MWi) / (R * T)

Vi = Wi / (7.48 * Di)

Wi = sum of (Wi,c * Nc) for VOC liquid "i" for all cans pierced (by can type and size category "c") during the month

where:

Di = density of VOC liquid "i", in pounds per gallon

E(piercing) = total VOC emissions from liquid recovery for all cans pierced in the month, in pounds

Ei(piercing) = pounds of VOC emissions from VOC liquid "i" recovered from cans pierced in the month

MWi = molecular weight of VOC liquid "i", in pounds per pound mole

Nc = number of cans pierced during the month for can type and size category "c"

Pi = vapor pressure of VOC liquid "i" at eighty degrees Fahrenheit, in mmHg

R = nine hundred ninety-nine mmHg-cubic feet per pound mole-degrees Kelvin

T = temperature in degrees Kelvin (equals two hundred seventy-three plus twenty-seven degrees Celsius)

Xi = mole fraction of VOC liquid "i" in liquid of pierced cans (value of one is used for this emissions estimate)

Vi = volume of VOC liquid "i" within pierced cans for the month, in cubic feet

Wi = amount of VOC liquid "i" within the pierced cans for the month, in pounds

Wi,c = amount of VOC liquid "i" for can type and size category "c", in pounds per can

7.48 = conversion factor in gallons per cubic foot

(7) VOC emissions testing.

The owner or operator shall conduct, or have conducted, emissions testing for the thermal incinerator to demonstrate the thermal incinerator's mass emission rate, destruction efficiency, and overall control efficiency for VOC emissions from this facility's gashouse operations in accordance with the following requirements:

(a) The emissions testing shall be conducted within six months of March 12, 2006, unless emissions testing had been conducted within three years prior to March 12, 2006 and the emissions testing demonstrated compliance with paragraph (RR)(2) of this rule.

(b) For the emissions testing, the owner or operator shall meet the general provisions of paragraph (A) of rule 3745-21-10 of the Administrative Code.

(c) The emissions testing shall be conducted in accordance with the test methods in paragraph (C) of rule 3745-21-10 of the Administrative Code with the

concentration of VOC in the thermal incinerator's inlet and outlet gas streams determined by means of USEPA method 25 or USEPA method 25A.

(d) The emission testing to determine the VOC capture efficiency of the vapor collection system used to transport VOC emissions from the facility's gashouse operations (propellant filling of aerosol cans and propellant line purging) to the thermal incinerator shall be conducted by means of the test methods specified in paragraph (C)(3)(c) of rule 3745-21-10 of the Administrative Code.

(e) The emission testing shall be conducted while the facility's gashouse is operating at or near its maximum capacity, unless otherwise specified or approved by the appropriate Ohio EPA district office or local air agency.

(f) The overall control efficiency of the thermal incinerator for VOC shall be the destruction efficiency times the capture efficiency divided by one hundred.

(g) The mass emission rate of the thermal incinerator, expressed in pounds VOC per thousand aerosol cans produced, shall be the hourly mass emission rate (pounds VOC per hour) divided by the hourly production rate (one thousand cans per hour).

(h) Additional testing of the gashouse and the thermal incinerator may be required by the director to ensure continued compliance with the applicable requirements.

(8) Safety diversion events and emergency events for gasser operations being vented to a thermal incinerator.

(a) A safety diversion is the venting of gasser operations directly to ambient air, instead of being vented to the thermal incinerator, in order to meet requirements of NFPA 30B: "Code for the Manufacturing and Storage of Aerosol Products." A safety diversion occurs when any of the lower explosive limit (LEL) detectors in the gashouse detects a concentration between twenty per cent and forty per cent of the LEL. Under a safety diversion, as described in NFPA 30B, Section 5.4.2(E), the ventilation rate of the affected gashouse line is quickly increased, the gashouse line is vented immediately to ambient air (i.e. thermal incinerator is bypassed), and production activities usually continue. Safety diversion events are less than five minutes and shall be included in the determination of compliance with the monthly VOC emission limitation of 0.75 pound VOC per thousand aerosol cans produced. A safety diversion event is not be a malfunction under paragraph (B) of rule 3745-15-06 of the Administrative Code.

(b) An emergency event is a condition that shuts down the line, releases propellant in the gasser to atmosphere and vents the gashouse directly to ambient air, instead of being vented to the thermal incinerator as required by NFPA 30B, Section 5.12. Emergency events include safety diversions greater than five minutes, detected LEL concentrations greater than forty per cent, low flow alarms, power loss, fire alarms, explosion suppression systems discharge, gashouse and thermal oxidizer safety system monitoring device fault and emergency stops (E-Stops). An E-Stop occurs when a gashouse operator shuts down the line due to an observed safety issue caused by the gashouse operation such as employee injury, damage to equipment, or operation problems such as shredding of cans. The owner or operator shall maintain a record of the emergency events.

(c) The VOC emissions for a safety diversion event shall be calculated based on the average concentration of the LEL detectors associated with the gashouse line, the flow rate of the gashouse line (measured with a mass flow meter), the propellant being filled, and the length of the event (seconds).

(d) The owner or operator shall calibrate the LEL detectors once per month following the manufacturer's protocol and shall check the flow meters once every six months for accuracy using a pilot tube.

(SS) On and after March 31, 1993, "Ritrama Duramark" or any subsequent owner or operator of the "Ritrama Duramark" facility located at 341 Eddy road, Cleveland, Ohio shall not cause, allow or permit the discharge into the ambient air of any VOC from the vinyl film casting line unless all of the VOC emissions are vented to an incinerator that is designed and operated to achieve a control efficiency of at least ninety-eight per cent, by weight, as determined under paragraph (C) of rule 3745-21-10 of the Administrative Code.

(TT) "ICI Americas Incorporated" or any subsequent owner or operator of the "ICI Americas Incorporated" facility located at 3647 Shepard road, Perry, Ohio, shall comply with the following requirements by no later than the date specified in paragraph (C)(54) of rule 3745-21-04 of the Administrative Code:

(1) For the tetra-hydro-phthalimide production process, the stage 1 and stage 2 reactor vent streams shall be vented to a flare that meets the requirements of paragraphs (DD)(10)(d), (DD)(10)(e), and (DD)(10)(f) of this rule.

(2) VOC emissions from the diked area of the carbon disulfide tanks shall be reduced by employing styrofoam sheets which completely cover the diked area.

(UU) "British Petroleum Company, Toledo Refinery" or any subsequent owner or operator of the "British Petroleum Company, Toledo Refinery" facility located at 4001 Cedar Point road, Oregon, Ohio shall comply with the following requirements for VOC emissions:

(1) On and after the date specified in paragraph (C)(55)(a) of rule 3745-21-04 of the Administrative Code, all VOC emissions from the SPOP waterwash tower spentwash flash drum and the POLY waterwash tower spentwash flash drum shall be vented to a flare that complies with the requirements of paragraphs (DD)(10)(d), (DD)(10)(e), and (DD)(10)(f) of this rule.

(2) On and after the date specified in paragraph (C)(55)(b) of rule 3745-21-04 of the Administrative Code, all VOC emissions from the alkyl 1 blowdown drum and the alkyl 2 blowdown drum shall be vented to a flare that complies with the requirements of paragraphs (DD)(10)(d), (DD)(10)(e), and (DD)(10)(f) of this rule.

(3) On and after the date specified in paragraph (C)(55)(b) of rule 3745-21-04 of the Administrative Code, all VOC emissions from the cokers 1 and 2 blowdown drum shall be vented to a flare that complies with the requirements of paragraphs (DD)(10)(d), (DD)(10)(e), and (DD)(10)(f) of this rule.

(4) On and after the date specified in paragraph (C)(55)(c) of rule 3745-21-04 of the Administrative Code, all process wastewater from the crude desalter shall be discharged to a steam stripper for the recovery of condensable hydrocarbons, and all VOC emissions from the steam stripper shall be vented to a flare that complies with the requirements of paragraphs (DD)(10)(d), (DD)(10)(e), and (DD)(10)(f) of this rule.

(5) On and after the date specified in paragraph (C)(55)(d) of rule 3745-21-04 of the Administrative Code, the barometric condensers and hot wells serving crude vacuum unit 1 and associated with cooling tower cell 6 shall be replaced with surface condensers (shell and tube heat exchangers).

(6) On and after the date specified in paragraph (C)(55)(e) of rule 3745-21-04 of the Administrative Code, the barometric condensers and hot wells serving crude vacuum unit 2 and associated with cooling tower cell 7 shall be replaced with surface condensers (shell and tube heat exchangers).

(VV) "Marathon Petroleum Company LLC" or any subsequent owner or operator of the "Marathon Petroleum Company LLC" facility located at 2408 Gambrinus road, S.W., Canton, Ohio shall comply with the following requirements for VOC emissions:

(1) Reserved.

(2) On and after March 31, 1993, all VOC emissions from the asphalt oxidizer shall be vented to an enclosed combustion device that is operated to reduce the VOC emissions by at least ninety-five per cent, by weight, as determined under paragraph (C) of rule 3745-21-10 of the Administrative Code.

(WW) (Reserved)

(XX) "Columbus Coated Fabrics" or any subsequent owner or operator of "Columbus Coated Fabrics" facility located at 1280 North Grant avenue, Columbus, Ohio shall comply with the requirements of either paragraph (XX)(1) or (XX)(2) of this rule for each of the seven U-frame vinyl coating lines and the HL-40 in-line vinyl coating line, by no later than the dates specified in paragraph (C)(58) of rule 3745-21-04 of the Administrative Code.

(1) A capture system and control system shall be employed which are designed and operated to achieve an overall control efficiency for the VOC emissions of at least eighty-one per cent, by weight, as determined under paragraph (C) of rule 3745-21-10 of Administrative Code.

(2) The VOC content of the coatings employed in the coating line, as determined under paragraph (B) of rule 3745-21-10 of Administrative Code, does not exceed 3.2 pounds per gallon of coating, excluding water and exempt solvents.

(YY) "PMC Specialties Group" or any subsequent owner or operator of the "PMC Specialties Group" facility located at 501 Murray road, Cincinnati, Ohio shall comply with the following requirements by no later than the dates specified in paragraph (C)(59) of rule 3745-21-04 of the Administrative Code:

(1) Any VOC emissions from the reactor process vent streams from the methyl anthranilate and anthranilic acid manufacturing operations shall be vented to an enclosed combustion device that is designed and operated to reduce the VOC emissions by at least ninety-five per cent, by weight, as determined under paragraph (C) of rule 3745-21-10 of the Administrative Code.

(2) For the OCBS fine chemicals system II process, the VOC emissions from the centrifuge vent shall not exceed twelve pounds of VOC per six thousand pounds of product, as determined under paragraph (C) of rule 3745-21-10 of the Administrative Code.

(ZZ) "Firestone Synthetic Rubber & Latex Company" or any subsequent owner or operator of the "Firestone Synthetic Rubber & Latex Company" facility located at 381 West Wilbeth road, Akron, Ohio shall comply with the following requirements for the VOC emissions from the reactor processes no later than the date specified in paragraph (C)(60) of rule 3745-21-04 of the Administrative Code:

(1) Except where exempted under paragraph (ZZ)(2) of this rule, each reactor process vent stream shall be vented to one of the following control equipment:

(a) An enclosed combustion device that is designed and operated to reduce the VOC emissions by at least ninety-eight per cent, by weight, as determined under paragraph (C) of rule 3745-21-10 of the Administrative Code; or

(b) A flare that meets the requirements of paragraphs (DD)(10)(d), (DD)(10)(e), and (DD)(10)(f) of this rule.

(2) Exempted from the requirements of paragraph (ZZ)(1) of this rule are the following reactor process vent streams:

(a) Any reactor process vent stream which is vented to an enclosed combustion device or a flare for which construction commenced prior to March 31, 1993, provided the enclosed combustion device or flare is operated and maintained in accordance with design specifications. This exemption shall terminate if the enclosed combustion device or flare is replaced with new control equipment for which construction commenced on or after March 31, 1993.

(b) Any reactor process vent stream which is an air-bearing vent stream, which has a VOC concentration between the lower explosive limit and the upper explosive limit, and which has a total resource effectiveness value greater than 1.0, as determined under paragraph (EE)(3) of this rule. If the reactor process has more than one of these air-bearing process vent streams, the total resource effectiveness value shall be based upon a combination of those air-bearing reactor process vent streams.

(AAA) Reserved.

(BBB) "BFGoodrich Company Akron Chemical Plant" or any subsequent owner or operator of the "BFGoodrich Company Akron Chemical Plant" facility located at 240 West Emerling avenue, Akron, Ohio shall comply with the following requirements by no later than the date specified in paragraph (C)(62) of rule 3745-21-04 of the Administrative Code:

(1) For the agerite resin D process, the VOC emissions from the recovery system vents and product neutralization and distillation system vents, except wash kettles (or still feed) condenser vents, stills vacuum jet tailpipe vents, and process emergency safety relief devices, shall be vented to a flare that meets the requirements of paragraphs (DD)(10)(d), (DD)(10)(e), and (DD)(10)(f) of this rule.

(2) For the superlite (trademark) process, the VOC emissions from the reactor process vent streams, except the process emergency safety relief devices, shall be vented to a control device that is designed and operated to achieve a control efficiency of at least ninety-five per cent, by weight, as determined under paragraph (C) of rule 3745-21-10 of the Administrative Code.

(3) For the diphenylamine-based antioxidants process, the VOC emissions from the reactor process vent streams, except the emulsion recovery system tank vent, recovered MND tank vent, and process emergency safety relief devices, shall be vented to a control device that is designed and operated to achieve a control efficiency of at least ninety-five per cent, by weight, as determined under paragraph (C) of rule 3745-21-10 of the Administrative Code.

(4) For the DPPD/PHDA process, the VOC emissions from the reactor process vent streams, except the north and south still jet vents and process emergency safety relief devices, shall be vented to a control device that is designed and operated to achieve a control efficiency of at least ninety-four per cent, by weight, as determined under paragraph (C) of rule 3745-21-10 of the Administrative Code.

(CCC) (Reserved)

(DDD) Gasoline dispensing facilities (stage II vapor control systems).

(1) Except where exempted under paragraph (DDD)(4) of this rule, no owner or operator of a gasoline dispensing facility may cause, allow, or permit the transfer of gasoline from a stationary storage tank at a gasoline dispensing facility into a motor vehicle after the dates specified in paragraph (C)(64) of rule 3745-21-04 of the Administrative Code unless the following requirements are met:

(a) All vapors displaced from the motor vehicle are vented to a vapor control system which is designed and operated to maintain an overall control efficiency of not less than ninety-five per cent, by weight, for the VOC in the displaced vapors and which is CARB certified. The vapor control system shall employ only coaxial hoses, and the use of remote check valves shall be prohibited.

(b) The vapor control system is installed, operated and maintained in accordance with the manufacturer's specifications and the applicable CARB certification, and is free of the following defects:

(i) Any component, that is required to be employed at all times pursuant to the system CARB certification, is absent or disconnected.

(ii) A vapor hose is crimped or flattened such that the vapor passage is blocked, or the pressure drop through the vapor hose exceeds by a factor of two or more the requirements in the CARB certification.

(iii) A nozzle boot is torn in one or more of the following manners:

(a) A triangular-shaped or similar tear one half inch or more to a side, or a hole one half inch or more in length; and

(b) A slit one inch or more in length.

(iv) A faceplate or flexible cone is damaged in the following manner:

(a) For balance nozzles and for nozzles for aspirator and educator assist type systems, the capability to achieve a seal with a fill pipe interface is affected for one fourth of the circumference of the faceplate (accumulated); and

(b) For nozzles for vacuum assist-type systems, more than one fourth of the flexible cone is missing.

(v) Nozzle shutoff mechanisms are malfunctioning in any manner.

(vi) Vapor return lines, including such components as swivels, antirecirculation valves and underground piping are malfunctioning or are blocked, or restricted such that the pressure drop through the lines exceeds by a factor of two or more the requirements specified in the system CARB certification.

(vii) A vapor processing unit is inoperative or malfunctioning.

(viii) A vacuum producing device is inoperative or malfunctioning.

(ix) Pressure/vacuum relief valves, vapor check valves, or dry breaks are inoperative.

(x) Any vapor recovery equipment is leaking liquid gasoline or gasoline vapors.

(xi) Any other equipment defect identified in the CARB certification as one which substantially impairs the effectiveness of the vapor control system.

(c) The vapor control system has successfully passed the testing requirements contained in paragraph (DDD)(2) of this rule.

(d) Operating instructions for the vapor control system are conspicuously posted in each gasoline dispensing area. The operating instructions shall clearly describe how to properly fuel motor vehicles and shall specifically prohibit the topping off of the motor vehicle fuel tank.

(2) Testing requirements:

(a) Except as otherwise provided in paragraph (DDD)(2)(h) of this rule, within sixty days after the installation or modification of a vapor control system required pursuant to paragraph (DDD)(1) of this rule, the owner or operator of the gasoline dispensing facility shall perform and comply with the requirements of the following tests:

(i) A leak test shall be performed in accordance with the test procedures contained in paragraph (Q) of rule 3745-21-10 of the Administrative Code to quantify the vapor tightness of the vapor control system. The vapor control system must comply with the leak rate criteria specified in the test procedures.

(ii) A dynamic pressure performance test shall be performed in accordance with the test procedures contained in paragraph (R) of rule 3745-21-10 of the Administrative Code to determine the pressure drop through the vapor control system at prescribed flow rates. The vapor recovery system must comply with the dynamic back pressures shown in the following table:

--

Nitrogen flowrate (standard cubic feet per hour)	Maximum dynamic back pressure (inches of water)
40	0.16
60	0.35
80	0.62

(b) For purposes of paragraph (DDD)(2)(a) of this rule, the modification of a vapor control system shall include the following:

(i) Any change, such as the removal of certified components and the addition or removal of piping or fittings, which may cause the vapor control system to be incapable of maintaining an overall control efficiency of not less than ninety-five per cent, by weight, for the VOC emissions.

(ii) Any change which requires an installation permit pursuant to rule 3745-31-02 of the Administrative Code.

(c) Not later than thirty days prior to any tests required pursuant to paragraphs (DDD)(2)(a) and (DDD)(2)(d) of this rule, the owner or operator of the gasoline dispensing facility shall submit a test notification to the appropriate Ohio EPA district office or local air agency. The test notification shall describe the proposed test methods and procedures, the time and date of the

tests, and the person who will be conducting the tests. Failure to submit such notification prior to the tests may result in the Ohio EPA's refusal to accept the results of the tests. Personnel from the appropriate Ohio EPA district office or local air agency shall be permitted to witness the tests, examine the testing equipment, and acquire data and information during the tests. After completion of any tests, the owner or operator shall complete the post test inspection form contained in appendix C to rule 3745-21-10 of the Administrative Code, and a comprehensive written report on the results of the tests shall be submitted to the appropriate Ohio EPA district office or local air agency within thirty days following the completion of the tests.

(d) At intervals not to exceed five years, the owner or operator of the gasoline dispensing facility shall repeat and demonstrate compliance with the requirements of the tests specified in paragraph (DDD)(2) of this rule.

(e) The director may require the owner or operator of a gasoline dispensing facility to perform other tests that have been authorized by the USEPA if such tests are necessary to demonstrate the adequacy of a vapor control system.

(f) The owner or operator of the gasoline dispensing facility shall perform and comply with any vapor control system tests specified in the applicable CARB certification. The tests shall be performed at the frequency specified in such certification.

(g) Any vapor control system test conducted in accordance with the previous test procedures and specifications that were effective on March 31, 1993 and subsequently amended or deleted may be used, where appropriate, in lieu of the test procedures and specifications currently contained in this rule, provided such vapor control system test was not conducted after January 17, 1995.

(h) Any vapor control system required by paragraph (DDD)(1) of this rule at an automobile or light-duty truck assembly plant that has not been tested in accordance with paragraph (DDD)(2)(a) of this rule as of January 17, 1995, shall be tested in accordance with paragraph (DDD)(2)(a) of this rule by July 17, 1995.

(3) Recordkeeping requirements:

(a) Any owner or operator of a gasoline dispensing facility which is subject to the requirements of paragraph (DDD)(1) of this rule shall maintain the following records:

(i) The quantity of gasoline delivered to the facility during each calendar month.

(ii) The results of any tests performed pursuant to paragraph (DDD)(2) of this rule.

(iii) A log of the date and description of all repair and maintenance work performed (including, but not limited to, work performed to meet manufacturer's specifications or CARB certification requirements), or any other modifications made to the vapor control system.

(iv) A copy of the most recent operating permit application (including emissions activity category form or appendix form) submitted to the Ohio EPA.

(v) A copy of the most recent operating permit issued by the Ohio EPA.

(vi) Proof of attendance and completion of the training required by the Ohio EPA for the operator or local manager of the gasoline dispensing facility.

(vii) Copies of all completed post test inspection forms.

(b) All records shall be retained by the owner or operator for a period of not less than three years and shall be made available to the director or any authorized representative of the director for review during normal business hours.

(4) Exemptions:

(a) Paragraph (DDD)(1) of this rule shall not apply to any gasoline dispensing facility which has a monthly gasoline throughput of less than ten thousand gallons per month or to any gasoline dispensing facility which is owned by an independent small business marketer and which has a monthly gasoline throughput of less than fifty thousand gallons per month. The monthly gasoline throughput shall be based upon the average monthly sales of gasoline during the period from November 16, 1990 through November 15, 1992; however, if a gasoline dispensing facility was inactive for any portion of this two year calculation period, the calculation period may be extended to include a total of twenty-four months of activity. This exemption shall cease to apply to a facility if during any calendar month after November 15, 1992, the gasoline throughput equals or exceeds ten thousand gallons or fifty thousand gallons, whichever is applicable. Furthermore, this exemption shall not apply to any facility which installed a vapor control system pursuant to the requirements of paragraph (DDD)(1) of this rule and the monthly gasoline throughput subsequently falls below ten thousand gallons per month or, if owned by an independent small business marketer, fifty thousand gallons per month.

(b) Paragraph (DDD)(1) of this rule shall not apply to marinas and aircraft refueling stands.

(c) The requirement in paragraphs (DDD)(1)(a) and (DDD)(1)(b) of this rule that refer to a CARB certification shall not apply to any vapor control system at an automobile or light-duty truck assembly plant. In cases where it has been determined that the test procedures specified in paragraph (DDD)(2)(a)(i) and/or (DDD)(2)(a)(ii) of this rule are not appropriate for a vapor control system at an automobile or light-duty truck assembly plant, alternative test procedures may be employed and alternative testing deadlines may be established provided that written, prior approval has been obtained from the Ohio EPA.

(d) Paragraph (DDD)(1) of this rule shall not apply to any motor vehicle fueling or refueling operation which is located at an automobile or light-duty truck assembly plant or heavier vehicle assembly facility and which, considered alone, has a monthly gasoline throughput of less than ten thousand gallons per month. Any gasoline dispensers located within two hundred feet from each other shall be considered as one operation for the purpose of this exemption.

(e) Paragraph (DDD)(1) of this rule shall not apply to any gasoline dispensing pump that is used solely for the dispensing of E85, a gasoline with an ethanol content of fifty-one to eighty-three per cent by volume.

(f) Paragraph (DDD)(1) of this rule shall not apply to any gasoline dispensing facility where gasoline is dispensed to a fleet of motor vehicles in which ninety-five per cent or more of the fleet of motor vehicles being fueled with gasoline is equipped with onboard refueling vapor recovery. If the gasoline dispensing facility is located at a motor vehicle assembly plant, the fleet of produced motor vehicles being initially fueled with gasoline shall be considered separate from any fleet of motor vehicles being refueled with gasoline. The owner or operator of a gasoline dispensing facility claiming this exemption shall maintain records documenting that at least ninety-five per cent of the fleet of motor vehicle being fueled with gasoline are equipped with onboard refueling vapor recovery. These records shall be retained by the owner or operator for a period of not less than five years and shall be made available to the director or any authorized representative of the director for review.

[Comment: This exemption is appropriate for gasoline dispensing facilities located at a facility or site serving a known fleet of motor vehicle rental agency, governmental agency, or motor vehicle assembly plant.]

(g) "New gasoline dispensing facility" exemption.

(i) For the purposes of this rule, a "new gasoline dispensing facility" is defined as one of the following:

(a) A facility that has not been operated as a gasoline dispensing facility at the location and after October 1, 2012, new underground storage tank systems and dispensers are installed that are compatible with onboard vapor recovery systems in vehicles.

(b) A gasoline dispensing facility which loses its exemption status under paragraph (DDD)(4)(a) of this rule, and does the following:

(i) Ensures that all existing dispensers, nozzles, hanging hardware, and piping above the shear valve are compatible with onboard vapor recovery systems in vehicles and replaces all existing hoses with low permeation hoses.

(ii) Conducts a leak test in accordance with the test procedures contained in paragraph (Q) of rule 3745-21-10 of the Administrative Code to quantify the vapor tightness of the system. The system must comply with the leak rate criteria specified in the test procedures.

(iii) Submits a certification statement, signed by an authorized representative, to the appropriate Ohio EPA district office or local air agency that confirms that the gasoline dispensing facility has complied with paragraph (DDD)(4)(g)(i)(c) of this rule. The certification statement shall be submitted within thirty days after the leak test is conducted.

(ii) Paragraph (DDD)(1) of this rule shall not apply to a "new gasoline dispensing facility" if the facility does both of the following:

(a) Installs low permeation hoses by October 1, 2013 or within thirty days of starting operations, whichever occurs later.

(b) Notifies Ohio EPA in writing that owner or operator intends to comply with the provisions of paragraph (DDD)(4)(g) of this rule within thirty days of the effective date of this rule or the commencement of construction.

For the purposes of paragraph (DDD) of this rule, low permeation hoses are hoses meeting the requirements of UL 330 (Seventh Edition) "Underwriters Laboratories' Standard for Hose and Hose Assemblies for Dispensing Flammable Liquids".

[Comment: Copies of the seventh edition of the standard UL 330, "Underwriters Laboratories' Standard for Hose and Hose Assemblies for Dispensing Flammable Liquids" can be obtained from underwriters laboratories, 2600 N.W. Lake Rd. Camas, WA 98607-8542, Telephone: 1.877.854.3577, Fax: 1.360.817.6278, E-mail: cec.us@us.ul.com or electronically at: http://www.ul.com/global/eng/pages/solutions/standards/accessstandards/catalogofstandards/standard/?id=330_7. This document is also available for review and use at most public libraries and "The State Library of Ohio."]

(5) Suspension of control requirements:

(a) If, as a result of the development of a redesignation request prepared in accordance with requirements of the USEPA and Section 107(d)(3)(D) of the Clean Air Act contained in 42 USC 7407 (d)(3)(D), the director determines that the stage II vapor control program is not necessary in an area to ensure the maintenance of the ambient air quality standard for ozone and subsequently submits an official redesignation request to the USEPA for approval, the director may suspend the requirements of this paragraph in that area. This suspension shall remain in effect until a violation of the ambient air quality standard for ozone is measured in the area or the USEPA disapproves the redesignation request.

(b) The director also may suspend the requirements of this paragraph in the event that the USEPA promulgates or a federal court of last resort requires the USEPA to promulgate onboard (on-the-vehicle) refueling control standards pursuant to Section 202(a)(6) of the Clean Air Act contained in 42 USC 7521(a)(6), unless the director determines that the stage II vapor control program is necessary for the attainment and/or maintenance of the ambient air quality standard for ozone and this determination is issued by the director as final findings and orders subject to public hearing requirements. If the director determines that the stage II vapor control program is not required for the maintenance of the ambient air quality standard for ozone after the promulgation of onboard control requirements, the director may suspend the requirements of this paragraph.

(c) The director may extend the compliance date in paragraph (DDD)(4)(g)(ii) of this rule to install low permeation hoses, if the director determines that the equipment is not readily available or if the equipment does not adequately control permeation.

(d) Beginning January 1, 2014, or upon the effective date of this rule whichever is later, gasoline dispensing facilities equipped with stage II vapor control systems may start decommissioning the stage II vapor control systems in accordance with the following procedures:

(i) Not later than fourteen days prior to decommissioning the stage II vapor recovery system, notify Ohio EPA or the local air agency, in writing, that the gasoline dispensing facility intends to decommission the stage II vapor recovery system and on what date the decommissioning will occur.

(ii) Decommission the stage II vapor recovery system in accordance with the petroleum equipment institute's guidance, "Recommended Practices for Installation and Testing of Vapor Recovery Systems at Vehicle Refueling Sites, PEI/RP300-09".

[Comment: Copies of the 2009 version of the "Recommended Practices for Installation and Testing of Vapor Recovery Systems at Vehicle Refueling Sites, PEI/RP300-09" are available from the petroleum equipment institute, "PO Box 2380, Tulsa, OK 74101-2380, 6514 E. 69 Street, Tulsa, OK 74133-1729", 918-494-9696 (telephone), 918-491-9895 (fax) or electronically on their website at: http://www.pei.org/. This document is also available for review and copying at most public libraries and "The State Library of Ohio."]

(iii) Decommissioning shall be conducted in accordance with Petroleum Equipment Institute's guidance, "Recommended Practices for Installation and Testing of Vapor Recovery Systems at Vehicle Refueling Sites, PEI/RP300-09", by professional technicians who have received appropriate training, have all of the required tools, and possess applicable regulatory or equipment-manufacturer certifications, if such certifications are available.

(iv) Prior to dispensing gasoline after the decommissioning has been completed, install low permeation hoses on all dispensers. Documentation of the use of low permeation hoses shall be retained for a period of not less than three years and shall be made available to the director or the director's authorized representative for review within seven business days of a request.

(v) Within thirty days after the decommissioning has been completed, apply for a permit-by-rule or permit-to-install and operate for the stage I system in accordance with Chapter 3745-31 of the Administrative Code and submit a certification statement, signed by an authorized representative, to the appropriate Ohio EPA district office or local air agency that confirms that the gasoline dispensing facility has been decommissioned in accordance with petroleum equipment institute's guidance, "Recommended Practices for Installation and Testing of Vapor Recovery Systems at Vehicle Refueling Sites, PEI/RP300-09" and low permeation hoses have been installed on all dispensers.

[Comment: This rule specifies that, after decommissioning, a facility apply for either a permit-by-rule or permit-to-install and operate. In the event that Ohio EPA has not developed a permit-by-rule for decommissioned stage II facilities, the source owner or operator may apply for a permit-by-rule that conforms to the conditions of the appropriate permit-by-rule form consistent with the requirements of the rule. Ohio EPA will hold the applications in abeyance while the agency finalizes the amendments to rule 3745-31-03 of the Administrative Code to reflect the option of a decommissioned stage II facility.]

(e) No later than January 1, 2017, all gasoline dispensing facilities equipped with stage II vapor control systems shall have decommissioned the stage II vapor control systems in accordance with the procedures outlined in paragraph (DDD)(5)(d) of this rule. The director may extend this deadline one year on an individual gasoline dispensing facility basis, if the gasoline dispensing facility can demonstrate that it is technically infeasible to comply with paragraph (DDD)(5)(d) of this rule or can demonstrate substantial economic hardship that prevents the decommissioning. The gasoline dispensing facility shall receive written authorization from the director in order to extend the decommissioning deadline.

Effective: 01/17/2014

R.C. 119.032 review dates: 08/25/2013

CERTIFIED ELECTRONICALLY
Certification

01/07/2014
Date

Promulgated Under: 119.03
Statutory Authority: 3704.03(E)
Rule Amplifies: 3704.03(A), 3704.03(E)
Prior Effective Dates: 10/19/79, 3/27/81, 6/21/82, 1/24/83, 5/9/86, 5/25/88, 8/22/90, 6/14/91, 3/31/93, 1/17/95, 6/15/99, 11/5/02, 3/12/06, 8/25/08, 4/2/09, 5/12/11, 4/29/13

3745-21-09 Appendix A

List of Organic Chemicals for which Paragraphs (DD) and (EE) of Rule 3745-21-09 of the Administrative Code are Applicable

Organic Chemical	Organic Chemical
Acetal	Benzamide
Acetaldehyde	Benzene
Acetaldol	Benzenedisulfonic acid
Acetamide	Benzenesulfonic acid
Acetanilide	Benzil
Acetic acid	Benzilic acid
Acetic Anhydride	Benzoic acid
Acetone	Benzoin
Acetone cyanohydrin	Benzonitrile
Acetonitrile	Benzophenone
Acetophenone	Benzotrichloride
Acetyl chloride	Benzoyl chloride
Acetylene	Benzyl alcohol
Acrolein	Benzylamine
Acrylamide	Benzyl benzoate
Acrylic acid	Benzyl chloride
Acrylonitrile	Benzyl dichloride
Adipic acid	Biphenyl
Adiponitrile	Bisphenol A
Alkyl naphthalenes	Bromobenzene
Allyl alcohol	Bromonaphthalene
Allyl chloride	Butadiene
Aminobenzoic acid	1-butene
Aminoethylethanolamine	n-butyl acetate
p-aminophenol	n-butyl acrylate
Amyl acetates	n-butyl alcohol
Amyl alcohols	s-butyl alcohol
Amyl amine	t-butyl alcohol
Amyl chloride	n-butylamine
Amyl mercaptans	s-butylamine
Amyl phenol	t-butylamine
Aniline	p-tertbutyl benzoic acid
Aniline hydrochloride	1,3-butylene glycol
Anisidine	n-butyraldehyde
Anisole	Butyric acid
Anthranilic acid	Butyric anhydride
Anthraquinone	Butyronitrile
Benzaldehyde	Caprolactam

Carbon disulfide
Carbon tetrabromide
Carbon tetrachloride
Cellulose acetate
Chloroacetic acid
m-chloroaniline
o-chloroaniline
p-chloroaniline
Chlorobenzaldehyde
Chlorobenzene
Chlorobenzoic acid
Chlorobenzotrichloride
Chlorbenzoyl chloride
Chlorodifluoromethane
Chlorodifluoroethane
Chloroform
Chloronapthalene
o-chloronitrobenzene
p-chloronitrobenzene
Chlorophenols
Chloroprene
Chlorosulfonic acid
m-chlorotoluene
o-chlorotoluene
p-chlorotoluene
Chlorotrifluoromethane
m-cresol
o-cresol
p-cresol
Cresols (mixture)
Cresylic acid
Crotonaldehyde
Crotonic acid
Cumene
Cumene hydroperoxide
Cyanoacetic acid
Cyanogen chloride
Cyanuric acid
Cyanuric chloride
Cyclohexane
Cyclohexanol
Cyclohexanone
Cyclohexene
Cyclohexylamine
Cyclooctadiene
Decanol
Diacetone alcohol
Diaminobenzoic acid
Dichloroaniline
m-dichlorobenzene
o-dichlorobenzene
p-dichlorobenzene
Dichlorodifluoromethane
Dichloroethyl ether
1,2-dichloroethane (EDC)
Dichlorohydrin
Dichloropropene
Dicyclohexylamine
Diethylamine
Diethylene glycol
Diethylene glycol diethyl ether
Diethylene glycol dimethyl ether
Diethylene glycol monobutyl ether
Diethylene glycol monobutyl ether acetate
Diethylene glycol monoethyl ether
Diethylene glycol monoethyl ether acetate
Diethylene glycol monomethyl ether
Diethyl sulfate
Difluoroethane
Diisobutylene
Diisodecyl phthalate
Diisooctyl phthalate
Diketene
Dimethylamine
N,N-dimethylaniline
N,N-dimethyl ether
N,N-dimethylformamide
Dimethylhydrazine
Dimethyl sulfate
Dimethyl sulfide
Dimethyl sulfoxide
Dimethyl terephthalate
3,5-dinitrobenzoic acid
Dinitrophenol
Dinitrotoluene
Dioxane
Dioxilane
Diphenylamine
Diphenyl oxide
Diphenyl thiourea

Dipropylene glycol
Dodecene
Dodecylaniline
Dodecylphenol
Epichlorohydrin
Ethanol
Ethanolamines
Ethyl acetate
Ethyl acetoacetate
Ethyl acrylate
Ethylamine
Ethylbenzene
Ethyl bromide
Ethylcellulose
Ethyl chloride
Ethyl chloroacetate
Ethylcyanoacetate
Ethylene
Ethylene carbonate
Ethylene chlorohydrin
Ethylenediamine
Ethylene dibromide
Ethylene glycol
Ethylene glycol diacetate
Ethylene glycol dimethyl ether
Ethylene glycol monobutyl ether
Ethylene glycol monobutyl ether acetate
Ethylene glycol monoethyl ether
Ethylene glycol monoethyl ether acetate
Ethylene glycol monomethyl ether
Ethylene glycol monomethyl ether acetate
Ethylene glycol monophenyl ether
Ethylene glycol monopropyl ether
Ethylene oxide
Ethyl ether
2-ethylhexanol
Ethyl orthoformate
Ethyl oxalate
Ethyl sodium oxalacetate
Formaldehyde
Formamide
Formic acid
Furmaric acid
Furfural
Glycerol
Glycerol dichlorohydrin
Glycerol triether
Glycine
Glyoxal
Hexachlorobenzene
Hexachloroethane
Hexadecyl alcohol
Hexamethylenediamine
Hexamethylene glycol
Hexamethylenetetramine
Hydrogen cyanide
Hydroquinone
p-hydroxybenzoic acid
Isoamylene
Isobutanol
Isobutyl acetate
Isobutylene
Isobutyraldehyde
Isobutyric acid
Isodecanol
Isoctyl alcohol
Isopentane
Isophorone
Isophthalic acid
Isoprene
Isopropanol
Isopropyl acetate
Isopropylamine
Isopropyl chloride
Isopropylphenol
Ketene
Linear alkyl sulfonate
Linear alkylbenzene (linear dodecylbenzene)
Maleic acid
Maleic anhydride
Malic acid
Mesityl oxide
Metanilic acid
Methacrylic acid
Methallyl chloride
Methanol
Methyl acetate
Methyl acetoacetate
Methylamine
n-methylaniline

Methyl bromide
Methyl butynol
Methyl chloride
Methylcyclohexane
Methylcyclohexanone
Methylene chloride
Methylene dianiline
Methylene diphenyl diisocyanate
Methyl ethyl ketone
Methyl formate
Methyl isobutyl carbinol
Methyl isobutyl ketone
Methyl methacrylate
Methylpentynol
a-methylstyrene
Methyl tert-butyl ether
Morpholine
a-naphthalene sulfonic acid
b-naphthalene sulfonic acid
a-naphthol
b-naphthol
Neopentanoic acid
o-nitroaniline
p-nitroaniline
o-nitroanisole
p-nitroanisole
Nitrobenzene
Nitrobenzoic acid (o, m, and p)
Nitroethane
Nitromethane
2-nitrophenol
Nitropropane
Nitrotoluene
Nonene
Nonylphenol
Octylphenol
Paraldehyde
Pentaerythritol
n-pentane
1-pentene
Perchloroethylene
Perchloromethyl mercaptan
o-phenetidine
p-phenetidine
Phenol
Phenolsulfonic acids
Phenyl anthranilic acid
Phenylenediamine
Phosgene
Phthalic anhydride
Phthalimide
b-picoline
Piperazine
Polybutenes
Polyethylene
Polyethylene glycol
Polyproylene
Polypropylene glycol
Polystyrene
Propionaldehyde
Propionic acid
n-propyl alcohol
Propylamine
Propyl chloride
Propylene
Propylene chlorohydrin
Propylene dichloride
Propylene glycol
Propylene oxide
Pyridine
Quinone
Resorcinol
Resorcylic acid
Salicylic acid
Sodium acetate
Sodium benzoate
Sodium carboxymethyl cellulose
Sodium chloroacetate
Sodium formate
Sodium phenate
Sorbic acid
Styrene
Succinic acid
Succinonitrile
Sulfanilic acid
Sulfolane
Tannic acid
Terephthalic acid
Tetrachloroethanes
Tetrachlorophthalic anhydride
Tetraethyl lead
Tetrahydronaphthalene

Tetrahydrophthalic anhydride
Tetramethyl lead
Tetramethylenediamine
Tetramethylethylenediamine
Toluene
Toluene-2,4-diamine
Toluene-2,4-diisocyanate
Toluene diisocyanates (mixture)
Toluenesulfonamide
Toluenesulfonic acids
Toluenesulfonyl chloride
Toluidines
Trichlorobenzenes
1,1,1-trichloroethane
1,1,2-trichloroethane
Trichloroethylene
Trichlorofluoromethane
1,2,3-trichloropropane
1,1,2-trichloro-1,2,2-trifluoroethane
Triethylamine
Triethylene glycol
Triethylene glycol dimethyl ether
Triisobutylene
Trimethylamine
Urea
Urea-formaldehyde
Vinyl acetate
Vinyl chloride
Vinylidene chloride
Vinyl toluene
o-xylene
p-xylene
Xylenes (mixture)
Xylenol
Xylidine

3745-21-09 Appendix B

Coefficients for the Total Resource Effectiveness Equations

FOR CHLORINATED PROCESS VENT STREAMS, IF 0 # NET HEATING VALUE (MJ/scm) # 3.5:

W = Vent Stream Flowrate (scm/min)	a	b	c	d	e	f
W < 13.5	48.73	0	0.404	-0.1632	0	0
13.5 < W # 700	42.35	0.624	0.404	-0.1632	0	0.0245
700 < W # 1400	84.38	0.678	0.404	-0.1632	0	0.0346
1400 < W # 2100	126.41	0.712	0.404	-0.1632	0	0.0424
2100 < W # 2800	168.44	0.747	0.404	-0.1632	0	0.0490
2800 < W # 3500	210.47	0.758	0.404	-0.1632	0	0.0548

FOR CHLORINATED PROCESS VENT STREAMS, IF 3.5 < NET HEATING VALUE (MJ/scm) :

W = Vent Stream Flowrate (scm/min)	a	b	c	d	e	f
W < 13.5	47.76	0	-0.292	0	0	0
13.5 < W # 700	41.58	0.605	-0.292	0	0	0.0245
700 < W # 1400	82.84	0.658	-0.292	0	0	0.0346
1400 < W # 2100	123.10	0.691	-0.292	0	0	0.0424
2100 < W # 2800	165.36	0.715	-0.292	0	0	0.0490
2800 < W # 3500	206.62	0.734	-0.292	0	0	0.0548

FOR NONCHLORINATED PROCESS VENT STREAMS, IF 0 # NET HEATING VALUE (MJ/scm) # 0.48:

W = Vent Stream Flowrate (scm/min)	a	b	c	d	e	f
W < 13.5	19.05	0	0.113	-0.214	0	0
13.5 < W # 1350	16.61	0.239	0.113	-0.214	0	0.0245
1350 < W # 2700	32.91	0.260	0.113	-0.214	0	0.0346
2700 < W # 4050	49.21	0.273	0.113	-0.214	0	0.0424

FOR NONCHLORINATED PROCESS VENT STREAMS, IF 0.48 < NET HEATING VALUE (MJ/scm) # 1.9:

W = Vent Stream Flowrate (scm/min)	a	b	c	d	e	f
W < 13.5	19.74	0	0.400	-0.202	0	0
13.5 < W # 1350	18.30	0.138	0.400	-0.202	0	0.0245
1350 < W # 2700	36.28	0.150	0.400	-0.202	0	0.0346
2700 < W # 4050	54.26	0.158	0.400	-0.202	0	0.0424

FOR NONCHLORINATED PROCESS VENT STREAMS, IF 1.9 < NET HEATING VALUE (MJ/scm) # 3.6:

W = Vent Stream Flowrate (scm/min)	a	b	c	d	e	f
W < 13.5	15.24	0	0.033	0	0	0
13.5 < W # 1190	13.63	0.157	0.033	0	0	0.0245
1190 < W # 2380	26.95	0.171	0.033	0	0	0.0346
2380 < W # 3570	40.27	0.179	0.033	0	0	0.0424

FOR NONCHLORINATED PROCESS VENT STREAMS, IF 3.6 < NET HEATING VALUE (MJ/scm) :

W' = Vent Stream Flowrate (scm/min) HT/3.6	a	b	c	d	e	f
W' < 13.5	15.24	0	0	0.0090	0	0
13.5 < W' # 1190	13.63	0	0	0.0090	0.0503	0.0245
1190 < W' # 2380	26.95	0	0	0.0090	0.0546	0.0346
2380 < W' # 3570	40.27	0	0	0.0090	0.0573	0.0424

3745-21-10 **Compliance test methods and procedures.**

[Comment: For dates of non-regulatory government publications, publications of recognized organizations and associations, federal rules, and federal statutory provisions referenced in this rule, see the last paragraph of rule 3745-21-01 of the Administrative Code titled "Incorporation by reference."]

(A) General provisions.

(1) The methods and procedures of this rule apply to sources governed by rule 3745-21-09 of the Administrative Code.

(2) Use of an alternative test method, in lieu of one of the USEPA's approved test methods or in lieu of other methods specified in this rule, must be approved by the USEPA as a revision of the state implementation plan.

(3) The results of any compliance testing required by the director for tests conducted pursuant to paragraphs (C) to (F) and (L) of this rule shall not be accepted unless the Ohio EPA district office or local air agency has been notified of the intent to test in accordance with paragraph (A)(4) of this rule not less than thirty days before the proposed initiation of the testing.

(4) Any person notifying the Ohio EPA district office or local air agency of a proposed emissions compliance test shall include as part of the notification the following information:

(a) A statement indicating the purpose of the proposed test and the applicable paragraph of rule 3745-21-09 of the Administrative Code;

(b) A detailed description of the facility to be tested;

(c) A detailed description of the test procedures, equipment and sampling sites; and

(d) A timetable, setting forth the dates on which:

(i) The testing will be conducted; and

(ii) The final test report will be submitted (not later than thirty days after completion of on-site sampling).

(5) For any source compliance determination, the owner or operator of the source shall be responsible for providing:

(a) Sampling ports, pipes, lines, or appurtenances for the collection of samples and data required by the test procedures;

(b) Safe access to the sample and data collection locations; and

(c) Light, electricity, and other utilities required for sample and data collection.

(B) Method for the determination of volatile organic compound content, solids content, and density of surface coatings and inks.

(1) This method applies to coatings, inks or other coating materials employed in a coating line, printing line or other operation. For purposes of this method "coating" shall also mean "ink" or other coating material.

(2) Any determination of VOC content, solids content, or density of a coating shall be based on the coating as employed (as applied), including the addition of any thinner or viscosity reducer to the coating.

(3) When a sample of a coating is obtained for analysis by any of the procedures described in this method, the amount of the sample shall be at least one quart. The sample shall be placed in an air-tight container. When multiple package coatings are sampled, separate samples of each component shall be obtained.

(4) Using either the procedures set forth in USEPA method 24 (for coatings) and USEPA method 24A (for flexographic and rotogravure printing inks and related coatings), or the coating formulation data from the coating manufacturer and coating user, the following shall be determined, where appropriate:

D_C = density of coating, in pounds of coating per gallon of coating.

D_{VM} = density of volatile matter in coating, in pounds of volatile matter per gallon of volatile matter.

V_S = volume fraction of solids (nonvolatile matter) in coating, in gallon of solids per gallon of coating.

V_{VM} = volume fraction of volatile matter in coating, in gallon of volatile matter per gallon of coating.

V_W = volume fraction of water in coating, in gallon of water per gallon of coating.

W_S = weight fraction of solids (nonvolatile matter) in coating, in pound of solids per pound of coating.

W_{VM} = weight fraction of volatile matter in coating, in pound of volatile matter per pound of coating. If this weight fraction is determined by ASTM D2369-04, "Standard Test Method for Volatile Content of Coatings," the drying conditions shall be one hundred ten degrees Celsius for one hour, except where otherwise authorized by the director based on an alternate analytical procedure that is satisfactorily demonstrated to the director by the coating manufacturer to be more representative of the actual cure mechanism of the coating.

W_W = weight fraction of water in coating, in pound of water per pound of coating.

(5) If the coating contains a volatile matter other than VOC or water, the identity and content of such volatile matter may be determined using either standard gas chromatographic techniques or coating formulation data from the coating manufacturer and coating user. The density of such volatile matter may be determined using either the procedures set forth in ASTM D1475-98 or data from reference texts. For purposes of this method, such volatile matter shall be referred to as exempt solvent. The following may be determined, where appropriate:

D_{ES} = density of exempt solvent, in pounds of exempt solvent per gallon of exempt solvent.

V_{ES} = volume fraction of exempt solvent in coating, in gallon of exempt solvent per gallon of coating.

W_{ES} = weight fraction of exempt solvent in coating, in pound of exempt solvent per pound of coating.

(6) The weight fraction W_{VOC} of VOC in a coating and the volume fraction V_{VOC} of VOC in a coating shall be calculated as follows, where appropriate:

$$W_{VOC} = W_{VM} - W_W - W_{ES}$$

$$V_{VOC} = V_{VM} - V_W - V_{ES}$$

(7) The VOC content of a coating can be expressed as follows:

$C_{VOC,1}$ = VOC content in pounds of VOC per gallon of coating.

$C_{VOC,2}$ = VOC content in pounds of VOC per gallon of coating, excluding water and exempt solvents.

$C_{VOC,3}$ = VOC content in pounds of VOC per gallon of solids.

$C_{VOC,4}$ = VOC content in pounds of VOC per pound of solids.

$C_{VOC,5}$ = VOC content in percentage VOC by volume of the coating, excluding water and exempt solvents.

$C_{VOC,6}$ = VOC content in percentage VOC by volume of the volatile matter.

$C_{VOC,7}$ = VOC content in percentage VOC by weight of the coating.

(8) The VOC content of a coating shall be calculated as follows, where appropriate:

(9) The weighted average VOC content of the coatings employed during a specified time period t shall be calculated as follows, where appropriate:

where:

A = subscript denoting that the indicated VOC content is a weighted average of the coatings employed during time period t.

L_C = liquid volume of coating employed during time period t, in gallons of coating.

M_C = mass (weight) of coating employed during time period t, in pounds of coating.

i = subscript denoting a specific coating employed during time period t.

n = total number of coatings employed during time period t.

t = time period specified for the weighted average VOC content.

(10) The density of the VOC content of a coating may be determined using either the procedures set forth in ASTM D1475-98 or data from reference texts. If ASTM D1475-98 is employed, the density shall be the arithmetic average of three determinations.

(11) In the event of a dispute between coating formulation data and data obtained by analytical procedures, the data obtained by analytical procedures shall be employed, except as otherwise provided in paragraph (B)(12) of this rule.

(12) If a VOC content value obtained by analytical procedures is higher than a VOC content value obtained by formulation data due to any VOC that is formed during baking or curing (i.e., cure volatiles), then the VOC content of the portion of the coating not subject to curing or baking shall be based on

formulation data and the VOC content of the portion of the coating subject to curing or baking shall be based on analytical procedures. The portion of the coating subject to curing or baking shall be equal to the measured transfer efficiency for the coating applicator and object being coated. The approach described in this paragraph for determining the VOC content of a coating may be used only when the applicable VOC limitation is expressed in terms of pounds of VOC per gallon of deposited solids and the transfer efficiency test method is specified in this rule or rule 3745-21-09 of the Administrative Code. Also, in cases where analytical results and formulation data are combined for a waterborne coating, the interlaboratory precision adjustments specified in the analytical procedures shall not be applied to the analytical results.

(C) Method for the determination of VOC concentration, VOC mass emission rate and VOC control equipment efficiency.

(1) The provisions of this paragraph are generally applicable to the test methods employed to determine the VOC concentration and VOC mass emission rate for a gas stream or exhaust vent and the collection or control efficiency for any control equipment designed, installed, and operated for the purpose of reducing the emission of VOC. For purposes of this paragraph, "vapor collection system" also means capture system and "vapor control system" also means control system or control device.

(2) The concentration of VOC in a gas stream or exhaust vent shall be determined by utilizing the following methods:

(a) USEPA method 25 or USEPA method 25A, as appropriate, for sources specified in paragraphs (C) to (L), (P), (R), (S), (U), (W) to (Y), (FF), (GG), (LL) to (NN) [if the control efficiency compliance option in (LL), (MM) or (NN) is chosen] and, (PP), (SS), (VV)(2), (XX)(1), (YY), (ZZ)(1)(a), (AAA)(1), and (BBB) of rule 3745-21-09 of the Administrative Code; or

(b) USEPA method 18) or USEPA method 25A, as appropriate, for sources specified in paragraphs (O)(3)(c)(iv), (O)(4)(a)(ii), (CC) to (EE), and (LL) to (NN) [if the ppmv compliance option in (LL), (MM) or (NN) is chosen] of rule 3745-21-09 of the Administrative Code.

(3) The following procedures shall be included in any source testing or determination where applicable:

(a) The source shall be operated at or near maximum operating capacity during any testing and the measurement of the operating rate shall be made in a manner acceptable to the Ohio environmental protection agency.

(b) The VOC content of any coatings employed shall be sampled and analyzed in accordance with paragraph (B) of this rule.

(c) The capture efficiency of any vapor collection system used to transport the VOC emissions from their point of origin to the vapor control system shall be determined in accordance with USEPA methods 204 to 204F or the alternative capture efficiency testing protocols specified in the USEPA, Office of Air Quality Planning and Standards document entitled "Guidelines for Determining Capture Efficiency."

(d) The control efficiency of any vapor control system used to reduce the emission of VOC shall be based upon an emissions test or a recovery test. For a vapor control system that destroys VOC (e.g., an incineration system), either the streams entering and leaving the vapor control system shall be tested or, if acceptable to the director, the amount of VOC employed shall be measured and the gas stream leaving the vapor control system shall be tested. For a vapor control system that recovers VOC (e.g., a carbon adsorption system), either the gas streams entering and leaving the vapor control system shall be tested or, if acceptable to the director, the amounts of VOC employed and recovered or, employed and emitted, shall be measured or tested.

(e) For the testing of a gas stream vented to a vapor control system, samples shall be taken simultaneously at the inlet and the outlet of the vapor control system.

(f) For the testing of a gas stream, the sampling location(s), volumetric flow rate, molecular weight, carbon dioxide and oxygen contents, excess air, and water vapor content shall be determined in accordance with USEPA methods 1, 1A, 2, 2A, 2C, 2D, 3 and 4.

(g) For gas streams tested by USEPA method 25 or 25A, the VOC emission rate shall be based upon the average of three test runs. Each run shall have a minimum duration of one hour and a minimum sample volume of .003 dry standard cubic meter, except that shorter sampling times or smaller volumes, when necessitated by process variables, may be found acceptable.

(h) The control efficiency of the vapor control system shall be the per cent reduction in mass emissions of VOC between the inlet and the outlet of the vapor control system. If this efficiency is based upon an emissions test utilizing USEPA method 25 or 25A, the mass emissions of VOC as carbon shall be employed in the efficiency determination.

(i) The capture efficiency of the vapor collection system shall be the per cent of total mass emissions of VOC emitted from the source which are vented to the vapor control system. If this efficiency is based upon an emissions test utilizing USEPA method 25 or 25A, the mass emissions of VOC as carbon shall be employed in the efficiency determination.

(j) The overall control efficiency (in per cent) of any control equipment for VOC emissions shall be the vapor capture efficiency multiplied by the vapor control efficiency and divided by one hundred.

(k) The total mass emission rate of VOC from a source equipped with control equipment shall be the sum of VOC emissions from the vapor control system, VOC emissions not collected by the vapor collection system and VOC emissions from any losses associated with the vapor collection system and vapor control system.

(4) The VOC mass emissions rate for a gas stream tested by USEPA method 18 shall be calculated as follows:

where:

E_s = VOC mass emission rate for the gas stream, in kilograms of VOC per hour (kg VOC/hr).

$K = 2.494 \times 10^{-6}$ (gram mole-kilogram-minute per standard cubic meter-gram-ppmv-hour);

where the standard temperature for gram-mole per standard cubic meter is twenty degrees Celsius.

Q_s = volumetric flow rate of gas stream, in dry standard cubic meters per minute , at a standard temperature of twenty degrees Celsius.

C_i = concentration of sample component i, in ppmv, dry basis.

M_i = molecular weight of sample component i, in grams per gram-mole.

i = subscript denoting a specific sample component, which is a VOC, in the gas stream.

n = total number of sample components, which are VOC, in the gas stream.

(5) The mass emission rate of VOC as carbon for a gas stream tested by USEPA method 25 shall be calculated as follows:

$E_s = K\, C_s Q_s$

where:

E_s = mass emission rate of VOC as carbon for the gas stream, in kilograms of carbon per hour (kg C/hr).

$K = 1 \times 10^{-6}$ kilograms per milligram.

C_s = concentration of VOC as carbon in the gas stream, in milligrams of carbon per dry standard cubic meter.

Q_s = volumetric flow rate of the gas stream, in dry standard cubic meters per hour.

(6) To convert a mass emission rate from kilograms per hour to pounds per hour, multiply the mass emission rate in kilograms per hour by 2.2046.

(7) To convert a mass emission value from VOC as carbon to VOC, divide the mass emission value of VOC as carbon by the weight fraction of carbon in the average molecular weight of the VOC emission. The determination of this weight fraction of carbon may be based on standard analytical techniques or material formulation data.

(D) Method for the determination of VOC emissions from solvent metal cleaning:

(1) This method is applicable to determining VOC emissions from solvent metal cleaning equipment.

(2) The purpose of this method is to quantify, by material balance, the amount of solvent input into a degreaser over a sufficiently long period of time so that an average emission rate can be computed.

(3) The following procedure shall be followed to perform a material balance test:

(a) Clean the degreaser sump before testing.

(b) Record the amount of initial and make-up solvent added to the tank with a flow meter or other means.

(c) Record the type and amount or weight of work load degreased each day.

(d) At the end of the test run, pump out the used solvent and measure the amount with a flow meter or other means. Also, estimate the volume of metal chips and other material remaining in emptied sump, if significant.

(e) Bottle a sample of the used solvent and analyze it to find the per cent that is oil and other contaminants. The oil and solvent proportions can be estimated by weighing samples of used solvent before and after boiling off the solvent. Compute the volume of oils in the used solvent. The volume of

solvent displaced by this oil along with the volume of make-up solvent added during operations is equal to the amount of VOC emissions.

(4) The following procedure can be followed to perform a material balance test in lieu of the procedure in paragraph (D)(3) of this rule:

(a) Clean the degreaser sump before testing.

(b) Record the amount of initial and make-up solvent added to the tank as measured with a flow meter or other means.

(c) Record the type and amount or weight of work load degreased over the period of the test.

(d) Record the amount of used solvent pumped out of the tank for disposal as measured with a flow meter or other means.

(e) Bottle a sample of the used solvent and analyze it to find the per cent that is oil and other contaminants.

(f) The VOC emissions from solvent metal cleaning equals the total solvent added to the tank minus the solvent contained in the used solvent being disposed.

(E) Method for the determination of VOC emissions from bulk gasoline terminals.

(1) This method is applicable to determining the VOC emission rates at a bulk gasoline terminal employing a vapor collection system and either a continuous or intermittent vapor control system at a loading rack.

(2) The VOC emission rates shall be determined in accordance with the methods and procedures contained in 40 CFR 60.503(b), (c), (e) and (f) of "Subpart XX - Standards of Performance for Bulk Gasoline Terminals," except that the gasoline throughput during any test shall be not less than ninety per cent of the maximum throughput of the loading rack(s) and not less than eighty thousand gallons.

(3) During any test, all loading racks shall be open for each product line which is controlled by the system under test. Simultaneous use of more than one loading rack shall occur to the extent that such use would normally occur.

(4) Simultaneous use of more than one dispenser on each loading rack shall occur to the extent that such use would normally occur.

(5) Dispensing rates shall be set at the maximum rate at which the equipment is typically operated. Automatic product dispensers are to be used according to normal operating practices.

(6) Applicable operating parameters of the vapor control system shall be monitored to demonstrate that the control unit is operating at design levels. Delivery devices shall be leak free.

(7) For each gasoline tank truck loaded during the test period, all potential sources of leaks shall be checked in accordance with the method specified in paragraph (K) of this rule. The tank identification number, the latest leak check certification date, and the location and highest detector reading for each incident of leakage shall be recorded.

(8) During each test, all potential sources of leaks in the vapor collection and control systems shall be monitored in accordance with the method specified in paragraph (K) of this rule. The location and highest detector reading for each incident of leakage shall be recorded.

(F) Method for the detection of leaks of VOC from petroleum refinery equipment and organic chemical manufacturing equipment.

(1) This method is applicable to the detection of leaks of VOC into the ambient air from petroleum refinery equipment and any chemical manufacturing equipment subject to paragraph (T) or (DD) of rule 3745-21-09 of the Administrative Code.

(2) The detection of leaks shall be determined in accordance with the test procedure set forth in USEPA method 21.

(3) The calibration gases shall be:

(a) Zero air, which consists of less than ten ppmv of hydrocarbon in air; and

(b) A mixture of air and methane or n-hexane at a concentration of approximately, but less than, ten thousand ppmv of methane or n-hexane.

(4) The leak detection instrument shall be calibrated before use on each day of its use.

(G) Standard method for the determination of the leak tightness of gasoline tank trucks (method G).

(1) This method is applicable to determining the leak tightness of gasoline tank trucks which are equipped with piping, hoses and other devices for the collection or return of gasoline vapors during the transfer of gasoline at a gasoline dispensing facility, bulk gasoline plant or bulk gasoline terminal.

(2) The leak tightness of a gasoline tank truck shall be determined in accordance with the test procedure set forth in USEPA method 27. For the pressure test, the initial pressure shall be 18.0 inches of water. For the vacuum test, the initial vacuum shall be 6.0 inches of water.

(3) If any gasoline tank truck or compartment of a gasoline tank truck sustains either a pressure decrease greater than 3.0 inches of water over five consecutive minutes for the pressure test or a pressure increase greater than 3.0 inches of water over five consecutive minutes for the vacuum test, the tank truck is not leak tight. If not leak tight, repair the tank truck as necessary and repeat the entire test procedure specified in paragraph (G)(2) of this rule until the gasoline tank truck or compartment passes the test.

(H) (Reserved)

(I) Method for the determination of seal gaps in an external floating roof tank.

(1) This method is applicable to determining the width and area of any gaps between the wall of an external floating roof tank and a seal which is around the circumference of the external floating roof.

(2) The width of any seal gap is the distance between the seal and the tank wall. It is determined by using probes of various widths to accurately measure the actual distance from the seal to the tank wall.

(3) The area of any seal gap is determined by multiplying the width of the seal gap, as determined in paragraph (I)(2) of this rule, by the circumferential length of the gap.

(4) The total seal gap area is the accumulated area of all gaps which are greater than 0.125 inch in width.

(J) Method for the determination of the perchloroethylene content of wastes at a dry cleaning facility which uses perchloroethylene.

(1) The method is applicable to determining the perchloroethylene content in per cent by weight for waste at a dry cleaning facility from any distillation operation which distills perchloroethylene and from any diatomaceous earth filter which filters perchloroethylene.

(2) The perchloroethylene content of the waste in per cent by volume is determined in accordance with the procedure in ASTM D322-97(2002)e1, and is calculated as the diluent content in that procedure.

(3) The density of the waste is determined by weighing a known volume of the waste and is calculated as the net weight of the waste in pounds divided by the volume of the waste in gallons.

(4) The perchloroethylene content of the waste in per cent by weight is calculated as the product of its diluent content and 13.55, divided by its density.

(K) Method for the detection of leaks of gasoline vapors from vapor control systems, vapor collection systems, vapor balance systems, gasoline barges and gasoline tank trucks.

(1) This method is applicable to the detection of leaks of gasoline vapors into the ambient air from:

(a) Vapor control systems, vapor collection systems, and vapor balance systems at barge loading facilities (for gasoline), bulk gasoline terminals, bulk gasoline plants, and gasoline dispensing facilities; and

(b) Gasoline barges and gasoline tank trucks during loading, providing the vapor control system, vapor collection system, or vapor balance system which is connected to the gasoline barge or gasoline tank truck does not create a back pressure greater than eighteen inches of water gauge pressure.

(2) This method describes the procedures to be followed for detecting leaks of gasoline vapors by means of a portable hydrocarbon gas analyzer, which is calibrated to read in per cent of the lower explosive limit as propane.

(3) The following equipment are used:

(a) A liquid manometer, or equivalent device, capable of measuring up to twenty-five inches of water gauge pressure with a precision of plus or minus 0.1 inch of water; and

(b) A portable hydrocarbon gas analyzer which:

(i) Is equipped with a sampling line of sufficient length for easy maneuverability during testing and a sampling probe having an internal diameter of 0.25 inch;

(ii) Is certified as safe for operation in explosive atmospheres;

(iii) Has a minimum range of zero to one hundred per cent of the lower explosive limit as propane; and

(iv) Has a response time for full-scale deflection of less than eight seconds with sampling line and probe attached.

(4) The portable hydrocarbon gas analyzer is calibrated with 2.2 per cent propane by volume in air (or equivalent calibration gas) for one hundred per cent of the lower explosive limit according to the procedures and frequency specified by the manufacturer.

(5) The test procedures for detecting leaks are the following:

(a) Connect the liquid manometer to a pressure tap in the vapor control system, vapor collection system, or vapor balance system as close as possible to the connection with the gasoline barge or gasoline tank truck;

(b) Record the pressure periodically during loading of the gasoline barge or gasoline tank truck;

(c) Check with the portable hydrocarbon gas analyzer all potential leak sources on the gasoline barge or gasoline tank truck during loading and on the vapor control system, vapor collection system, or vapor balance system by:

(i) Maintaining the probe's inlet about one inch from the potential leak source in the path of (parallel to) the vapor flow from a leak;

(ii) Moving the probe slowly around the periphery of the potential leak source to locate the point of highest meter response;

(iii) Blocking as much as possible the wind from the area being monitored; and

(d) Record the location of leakage and the highest detector reading for each incidence of leakage.

(L) Method for the determination of the emission of volatile organic compounds from a dryer at a petroleum dry cleaning facility.

(1) This method is applicable to determining the volatile organic compound emission rate of a dryer containing articles cleaned in petroleum solvent at a dry cleaning facility.

(2) The dryer shall be tested under normal operating conditions for at least thirty dryer loads that total not less than four thousand pounds dry weight of articles cleaned. The dryer loads shall represent a normal range of variations in fabrics, solvents, load weights, temperatures, flow rates, and process deviations. Each dryer load shall be tested in accordance with paragraph (L)(3) or (L)(4) of this rule.

(3) For each dryer load the following shall be conducted and recorded:

(a) Determine the average stack gas dry volumetric flow rate V (in dry standard cubic feet per hour) in accordance with USEPA methods 1 and 2.

(b) Determine the average organic concentration C in the stack (in ppmv as propane) in accordance with USEPA method 25A in which the flame ionization analyzer is calibrated with propane standards.

(c) Determine the ratio R of the flame ionization analyzer's response to a given parts per million by volume concentration of propane to its response to the same parts per million by volume concentration of the volatile organic compounds present in the stack gas.

(d) Determine the molecular weight M (in pounds per pound-mole) of the volatile organic compounds present in the stack gas. Such determination shall be based on data from the manufacturer of the cleaning solvent or on standard analytical techniques.

(e) Measure and record the weight W_a (in pounds dry weight) of the articles to be cleaned.

(f) Calculate the weight W_{voc} (in pounds) of the volatile organic compounds emitted into the ambient air using the following equation:

$$W_{voc} = V \times C \times R \times M$$

(4) For each dryer load the following shall be conducted and recorded:

(a) All weights shall be measured to the nearest 0.5 pound or less on a scale that is accurate to 0.5 pound at weights of up to two hundred pounds.

(b) Measure and record the weight W_a (in pounds) of the articles to be cleaned.

(c) Measure and record the initial weight W_i (in pounds) of the articles to be dried after the washing cycle.

(d) Measure and record the final weight W_f (in pounds) of the articles removed from the dryer after the drying cycle.

(e) Measure and record the weight W_r (in pounds) of any recovered liquid materials.

(f) Calculate the weight W_{VOC} (in pounds) of the volatile organic compounds emitted into the ambient air using the following equation:

$$W_{VOC} = W_i - W_f - W_r$$

(5) The dryer's volatile organic compound emission rate (in pounds per one hundred pounds dry weight of articles cleaned) shall be calculated for the combined dryer loads tested under this method as equal to one hundred multiplied by the sum total of W_{VOC} and divided by the sum total of W_a.

(M) Method for the determination of the amount of volatile organic compounds contained in filtration waste at a petroleum dry cleaning facility.

(1) This method is applicable to determining the amount of volatile organic compounds contained in the waste from a solvent filter used to filter petroleum solvent at a dry cleaning facility.

(2) The solvent filter shall be tested under normal operating conditions for at least three time periods according to the procedures specified in paragraph (M)(3) of this rule.

(3) The test procedures for each time period are as follows:

(a) A time period consists of the time immediately after the removal of waste from the solvent filter up to the next removal of waste.

(b) Record the date and time of the start of the time period.

(c) Record during the time period the weight of articles being cleaned in any washer connected to the solvent filter.

(d) Record the weight of the waste from the solvent filter at the end of the time period, in pounds.

(e) Collect in a sealed container, which is impervious to petroleum solvent, about two pounds of the waste from the solvent filter at the end of the time period.

(f) Record the date and time of the end of the time period.

(g) Conduct a laboratory analysis of the waste collected in the sealed container according to the procedures specified in paragraph (M)(4) of this rule.

(4) The procedures for the laboratory analysis of the collected filtration waste are as follows:

(a) Determine the weight W_s (in grams of a sample of approximately fifty milliliters of the filtration waste).

(b) Determine the volume V_s (in milliliters) of the diluent content of that sample in accordance with ASTM D322-97(2002)e1.

(c) Calculate the sample's diluent content D_s (fraction diluent by weight) using the following equation:

where 0.78 is the typical density of petroleum solvent in grams per milliliter.

(5) For the test conducted under paragraphs (M)(2), (M)(3) and (M)(4) of this rule, the amount of VOCs contained in the filtration waste is calculated using the following equation:

where:

X = amount of VOCs in the filtration waste, in pounds of VOC per one hundred pounds dry weight of articles cleaned.

A = total weight of articles cleaned during the time period indicated, in pounds dry weight.

D = diluent content of the sample of filtration waste for the time period indicated, in fraction diluent by weight (pounds of diluent per pound of filtration waste).

W = total weight of filtration waste for the time period indicated.

Subscripts 1, 2, and 3 identify the time period of the test.

(N) Method for the determination of the length of time to operate the recovery cycle of a solvent recovery dryer at a petroleum dry cleaning facility.

(1) This method is applicable to determining the length of time for operating the solvent recovery cycle of a solvent recovery dryer at a petroleum dry cleaning facility in order to assure that the flow rate of recovered petroleum solvent at the termination of solvent recovery cycle is no greater than fifty milliliters per minute.

(2) The dryer shall be tested under normal operating conditions for a duration of no less than two weeks during which no less than one-half of the dryer loads shall be monitored for their final recovered solvent flow rate.

(3) The suggested point for measuring the flow rate of recovered solvent is from the outlet of the solvent-water separator. Near the end of the recovery cycle, the

entire flow of recovered solvent is diverted to a graduated cylinder. As the recovered solvent collects in the graduated cylinder, the elapsed time is monitored and recorded in periods greater than or equal to one minute. At the same time, the volume of solvent in the graduated cylinder is monitored and recorded to determine the volume of recovered solvent that is collected during each time period. The recovered solvent flow rate is calculated by dividing the volume of solvent collected per period by the length of time elapsed during the period and converting the result with appropriate factors into units of milliliters per minute. The recovery cycle and the monitoring procedure is continued until the flow rate of solvent is less than or equal to fifty milliliters per minute. The date, the type of articles cleaned, and the total length of the recovery cycle shall be recorded for each dryer load being monitored.

(O) Method for the determination of equipment in VOC service and in light liquid service.

(1) This method is applicable to equipment at a petroleum refinery or a process unit subject to paragraph (T) or (DD) of rule 3745-21-09 of the Administrative Code.

(2) Any piece of equipment is presumed to be in VOC service, unless the owner or operator demonstrates that the piece of equipment is not in VOC service according to the following provisions:

(a) The piece of equipment is considered not in VOC service if it can be determined that the VOC content of the process fluid, which is contained in or contacts the piece of equipment, can be reasonably expected never to exceed ten per cent by weight.

(b) For purposes of determining the VOC content of a process fluid, procedures that conform to the general methods described in ASTM E168-99(2004), ASTM E169-04, and ASTM E260-73 shall be used.

(c) The owner or operator may use engineering judgment rather than the procedures contained in paragraph (O)(2)(b) of this rule to demonstrate that the VOC content of a process fluid does not exceed ten per cent by weight, provided the VOC content clearly does not exceed ten per cent by weight. In the event the Ohio environmental protection agency or the USEPA has a disagreement with an engineering judgment, paragraph (O)(2)(b) of this rule shall be used to resolve the disagreement.

(3) A piece of equipment is in light liquid service if it contains or is in contact with a process fluid that meets all of the following conditions:

(a) The process fluid is a liquid at operating conditions.

(b) The vapor pressure of one or more of the pure components within the process fluid is greater than 0.04 pound per square inch at sixty-eight degrees Fahrenheit. Vapor pressures may be obtained from standard reference texts or may be determined by the method in ASTM D2879-70.

(c) The total concentration of the pure components having a vapor pressure greater than 0.04 pound per square inch at sixty-eight degrees Fahrenheit is equal to or greater than twenty per cent by weight.

(P) Method for the determination of the net heating value of a gas, the actual exit velocity for a flare, and the maximum permitted velocity for an air-assisted flare.

(1) This method is applicable to:

(a) Any flare subject to paragraph (DD) of rule 3745-21-09 of the Administrative Code; and

(b) Any process vent stream subject to paragraph (EE) of rule 3745-21-09 of the Administrative Code.

(2) The net heating value of gas being combusted in a flare or being vented from a process vent stream shall be calculated using the following equation:

where:

H_T = net heating value of the sample, in mega joules per standard cubic meter (MJ/scm), where the net enthalpy per mole of offgas is based on combustion at twenty-five degrees Celsius and seven hundred sixty millimeters of mercury, but the standard temperature for determining the volume corresponding to one mole is twenty degrees Celsius.

where the standard temperature for gram-mole per standard cubic meter (g mole/scm) is twenty degrees Celsius.

C_i = concentration of sample component i in ppmv, as measured by the procedures in USEPA method 18, and ASTM D1946-77 reported on a wet basis.

H_i = net heat of combustion of sample component i, in kilocalories per gram-mole. The heat of combustion may be determined using the procedures in ASTM D2382-76 if published values are not available or cannot be calculated.

i = subscript denoting a specific component in the sample.

n = total number of components within the sample.

(3) The actual exit velocity of a flare shall be calculated by dividing the volumetric flow rate (in units of standard temperature and pressure) of the flare header or headers that feed the flare, as determined by USEPA methods 2, 2A, 2C, or 2D as appropriate, by the unobstructed (free) cross-sectional area of the flare tip, as determined by design and engineering principles.

(4) The maximum permitted velocity of an air-assisted flare shall be determined by the following equation:

$$V_{max} = 8.706 + 0.7084 (H_T)$$

where:

V_{max} = maximum permitted velocity of an air-assisted flare, in meters per second (m/sec).

H_T = the net heating value as determined in paragraph (P)(2) of this rule.

(5) To express the net heating value of a gas in Btu per standard cubic foot, multiply H_T by 26.84.

(6) To express a velocity in feet per second, multiply the velocity in meters per second by 3.281.

(Q) Method for the detection of leaks of gasoline vapors from a vapor control system installed at a gasoline dispensing facility (static leak test).

(1) This method is applicable to quantifying the vapor tightness of a vapor balance system or a vacuum assist control system installed at a gasoline facility.

(2) This method describes the procedures to be followed for detecting leaks of gasoline vapors by pressurizing the entire vapor recovery control system to two inches of water column and then allowing the system pressure to decay for five minutes. The acceptability of the final pressure is based upon the vapor system volume or ullage space. The allowable five minute final pressure is based upon the gasoline tank ullage, pressure decay equations, and the number of affected nozzles.

(3) The equipment, procedures, and pressure decay leak criteria are specified in appendix A of this rule.

(R) Method for the determination of the dynamic pressure performance for a vapor control system installed at a gasoline dispensing facility (dynamic pressure performance test).

(1) This method is applicable to determining the dynamic pressure at known dispensing flow rates for a vapor control system installed at a gasoline dispensing facility. This method is used to quantify the back pressure and detect liquid obstructions in the vapor path leading from the dispensing nozzle to the gasoline storage tank.

(2) This method describes the procedures to be followed in simulating the dynamic back pressures associated with known gasoline dispensing rates and liquid blockages by passing nitrogen through the vapor control system at three flow rates after liquid gasoline has been introduced into the vapor return piping.

(3) The equipment, procedures, and dynamic pressure performance criteria are identified in appendix B to this rule.

Effective: 08/25/2008

R.C. 119.032 review dates: 02/21/2008 and 08/25/2013

CERTIFIED ELECTRONICALLY
Certification

08/15/2008
Date

Promulgated Under: 119.03
Statutory Authority: 3704.03(E)
Rule Amplifies: 3704.03(E), 3704.03(A)
Prior Effective Dates: 10/19/1979, 3/27/1981, 6/21/1982, 1/24/1983, 5/9/1986, 5/25/1988, 8/22/1990, 3/31/1993, 1/17/1995, 6/15/1999, 11/5/2002

3745-21-10 APPENDIX A

STATIC LEAK TEST

(taken from BAAQMD test procedure ST-30)

l. Applicability

1.1 This test procedure is used to quantify the vapor tightness of vapor control systems installed at any gasoline dispensing facility (GDF) equipped with pressure/vacuum (P/V) valves, provided that the designed pressure setting of the P/V valves is a minimum of 2.5 inches of water column (inches H_2O). Excessive leaks in the vapor control system will increase the quantity of fugitive hydrocarbon emissions and lower the overall efficiencies of both the Stage I and Stage II vapor control systems.

1.2 For those systems equipped with a P/V valve(s) allowed to have a designed cracking pressure less than 2.5 inches H_2O, the valve(s) shall be bagged to eliminate, from the test results, any flow contribution through the valve assembly. The valve/vent pipe connection, however, shall remain unobstructed during this test.

1.3 For those facilities not required to be equipped with a P/V valve(s), the vent pipe(s) shall be capped. For these installations, the test may be conducted at the vent pipe(s).

2. Principle

2.1 The entire vapor control system is pressurized with nitrogen to two (2.0) inches H_2O. The system pressure is then allowed to decay and the pressure after five (5) minutes is compared with an allowable value. The minimum allowable five-minute final pressure is based on the system ullage and pressure decay equations. For the purpose of compliance determination, this test shall be conducted after all back-filling, paving, and installation of all Stage I and Stage II components, including P/V valves, has been completed.

2.2 For a GDF equipped with a coaxial Stage I system this test shall be conducted at a Stage II vapor riser. For a GDF which utilizes a two-point Stage I system this test shall be conducted at the Stage I vapor coupler, provided that the criteria set forth in Section 6.7 have been met. If the integrity criteria for two-point systems specified in Section 6.7 are met, this test shall be conducted at the Stage I vapor coupler unless the vapor control system possesses a design which is incompatible with testing at this location.

3. Range

3.1 If mechanical pressure gauges are employed, the full-scale range of the pressure gauges shall be 0-2.0, 0-1.0, and 0-0.50 inches H_2O column. Maximum incremental graduations of the pressure gauge shall be 0.05 inches H_2O and the minimum accuracy of the gauge shall be three percent of full scale. The minimum diameter of the pressure gauge face shall be 4 inches.

3.2 If an electronic pressure measuring device is used, the full-scale range of the device shall not exceed 0-10 inches H_2O with a minimum accuracy of 0.5 percent of full-scale. A 0-20 inches H_2O device may be used, provided the equivalent accuracy is not less than 0.25 percent of full scale.

3.3 The minimum ullage during the test shall be 25 percent of the tank capacity (total of **all** tanks if manifolded) or 500 gallons, whichever is greater. The maximum total ullage shall be 25,000 gallons. These values are exclusive of all vapor piping volumes.

3.4 The minimum and maximum nitrogen feed-rates, into the system, shall be one (1) and five (5) CFM, respectively.

4. Interferences

4.1 Nitrogen shall not be introduced into the system at flowrates exceeding five (5) CFM as this may bias the results of the test toward non-compliance.

4.2 For vacuum-assist Stage II systems which utilize an incinerator, power to the collection unit shall be turned off during testing.

4.3 For vacuum-assist systems which locate the vacuum producing device in-line, between the Stage II vapor riser and the storage tank, the following shall apply:

4.3.1 A valve shall be installed at the vacuum producing device. When closed, this valve shall isolate the vapor passage downstream of the vacuum producing device.

4.3.2 The storage tank side of the vacuum producing device shall be tested in accordance with the procedures outlined in Section 7 of this method. Compliance shall be determined by comparing the final five-minute pressure with the allowable minimum five-minute final pressure from the first column (1-6 affected nozzles) in Table IB or use the corresponding equation in Section 9.2.

4.3.3 The upstream vapor passage (nozzle to vacuum producing device) shall also be tested. Methodology for this test shall be submitted to the Ohio EPA, Division of Air Pollution Control for approval prior to submission of test results or shall be conducted in accordance with the procedures set forth in the applicable CARB Executive Order.

5. Apparatus

5.1 Nitrogen. Use commercial grade nitrogen in a high pressure cylinder, equipped with a two-stage pressure regulator and a one psig pressure relief valve. A one psig (maximum) pressure relief valve is required and **must** be present. In addition, the cylinder of nitrogen **must** be grounded.

5.2 Pressure Measuring Device. Use 0-2.0, 0-1.0, and 0-0.50 inches H_2O pressure gauges connected in parallel, a 0-2 inches H_2O manometer, or an electronic pressure measuring device to monitor the pressure decay in the vapor control system. The pressure measuring device shall, at a minimum, be readable to the 0.05 inches H_2O.

5.3 "T" Connector Assembly. See Figure 1 below for example.

Figure 1

"T" Connector Assembly

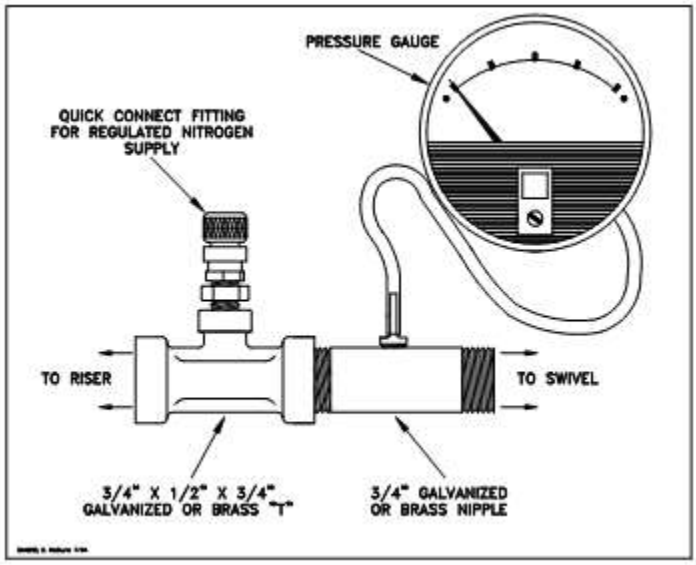

5.4 Vapor Coupler Integrity Assembly. Assemble OPW 633-A, 633-B, AND 634-A adapters, or equivalent, as shown in Figure 2 below. If the test is to be conducted at the storage tank Stage I vapor coupler, this assembly shall be used prior to conducting the static leak test in order to verify the pressure integrity of the vapor poppet. The internal volume of this assembly shall not exceed 0.1 cubic feet.

Figure 2

Vapor Coupler Integrity Assembly

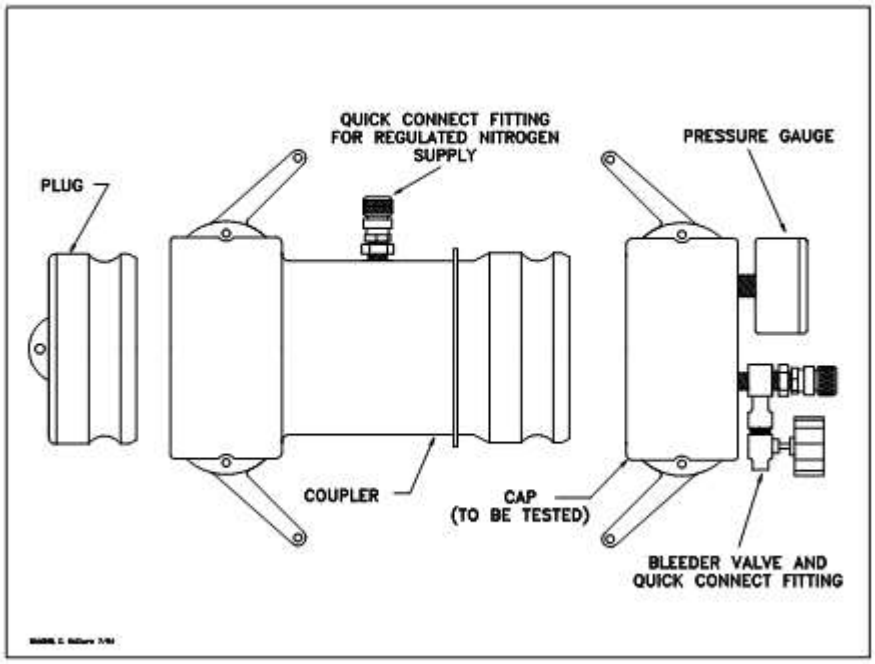

5.5 Vapor Coupler Test Assembly. Use a compatible OPW 634-B cap, or equivalent, equipped with a center probe to open the poppet, the appropriate pressure measuring device to monitor the pressure decay, and a connection for the introduction of nitrogen into the system. See Figure 3 below for example.

Figure 3

Vapor Coupler Test Assembly

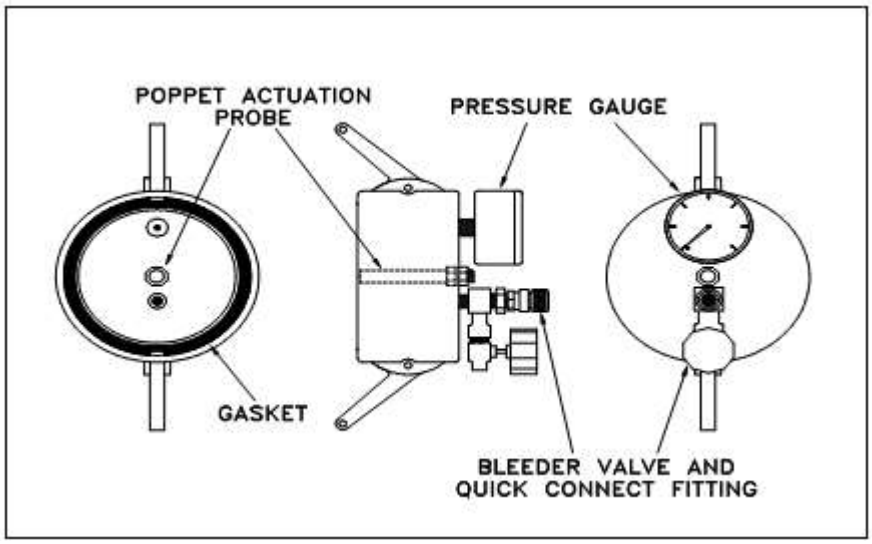

5.6 Stopwatch. Use a stopwatch accurate to within 0.2 seconds.

5.7 Flowmeter. Use a Dwyer flowmeter, Model RMC-104, or equivalent, to determine the required pressure setting of the delivery pressure gauge on the nitrogen supply pressure regulator. This pressure shall be set such that the nitrogen flowrate is between 1.0 and 5.0 CFM.

5.8 Combustible Gas Detector. A Bacharach Instrument Company, Model 0023-7356, or equivalent, may be used to verify the pressure integrity of system components during this test.

5.9 Leak Detection Solution. Any liquid solution designed to detect vapor leaks may be used to verify the pressure integrity of system components during this test.

6. Pre-Test Procedures

6.1 The following safety precautions shall be followed:

6.1.1 Only grounded nitrogen shall be used to pressurize the system.

6.1.2 A one psig relief valve shall be installed to prevent the possible over-pressurizing of the storage tank.

6.2 Product dispensing shall not occur during the test. There shall have been no Stage I deliveries into or out of the storage tanks within the three hours prior to the test. For vacuum-assist Stage II systems, product dispensing shall not occur during the thirty minutes immediately prior to the test.

6.3 Measure the gallons of gasoline present in each underground storage tank and determine the actual capacity of each storage tank from facility records. Calculate the ullage space for each tank by subtracting the gasoline gallonage present from the actual tank capacity. The minimum ullage during the test shall be 25 percent of the tank capacity (total of **all** tanks if manifolded) or 500 gallons, whichever is greater. The total ullage shall not exceed 25,000 gallons.

6.4 For two-point Stage I systems, this test shall be conducted with the dust cap removed from the vapor coupler. This is necessary to determine the vapor tightness of the Stage I vapor poppet. See Section 6.7 if this test is to be conducted at the Stage I vapor coupler.

6.4.1 For coaxial Stage I systems this test shall be conducted with the dust cap removed from the Stage I coupler. This is necessary to insure the vapor tightness of the Stage I vapor poppet.

6.4.2 Verify that the liquid level in the storage tank is at least four (4) inches above the highest opening at the bottom of the submerged drop tube.

6.5 If the Stage I containment box is equipped with a drain valve, the valve assembly may be cleaned and lubricated prior to the test. This test shall, however, be conducted with the drain valve installed and the manhole cover removed. See subsection 7.4.1 for further details regarding containment box drain valves.

6.6 If the test is to be conducted at a Stage II vapor riser, disconnect the dispenser end of one vapor control hose and install the "T" connector assembly (see Figure 1). Connect the nitrogen gas supply (do not use air) and the pressure measuring device to the "T" connector.

6.6.1 For those Stage II systems utilizing a dispenser mounted remote vapor check valve, the "T" connector assembly shall be installed on the vapor riser side of the check valve.

6.7 If this test is to be conducted at the Stage I vapor coupler on a two-point Stage I system, the procedures set forth in subsections 6.7.1 and 6.7.2 shall be successfully completed prior to testing. The static leak test shall not be conducted at the Stage I coupler at facilities equipped with coaxial Stage I systems.

6.7.1 Connect the Vapor Coupler Integrity Assembly to the Stage I vapor coupler. Connect the Vapor Coupler Test Assembly. Connect the nitrogen supply to the assembly and carefully pressurize the internal volume of the assembly to two (2.0) inches H_2O. Start the stopwatch. Record the final pressure after one minute.

6.7.2 If the pressure after one minute is less than 0.25 inches H_2O, the leak rate through the Stage I vapor poppet precludes conducting the static leak test at this location. Repair or replace the faulty component(s) as necessary and restart the test pursuant to Section 6.7.1. If the pressure after one minute is greater than or equal to 0.25 inches H_2O, the static leak test may be conducted at this location. This criteria assures a maximum leak rate through the Stage I vapor poppet of less than 0.0004 cubic feet per minute.

6.7.3 Disconnect the Vapor Coupler Integrity Assembly from the Stage I vapor coupler. If the requirements of subsection 6.7.2 were met, install the Vapor Coupler Test Assembly to the Stage I vapor coupler.

6.8 All pressure measuring device(s) shall be bench calibrated using either a reference gauge or incline manometer. Calibration shall be performed at 20, 50, and 80 percent of full scale. Accuracy shall be within two percent at each of these calibration points. Calibrations shall be conducted on a frequency not to exceed 90 days. The individual conducting the test shall supply to the Ohio EPA or its designated local air agency with proof of equipment calibration meeting the requirements of this Section.

6.9 Use the flowmeter to determine the nitrogen regulator delivery pressures which correspond to nitrogen flowrates of 1.0 and 5.0 CFM. These pressures define the allowable range of delivery pressures acceptable for this test procedure. Also record which regulator delivery pressure setting, and the corresponding nitrogen flowrate, will be used during the test.

6.10 Use Equation 9.3 to calculate the approximate time required to pressurize the system ullage to the initial starting pressure of two (2.0) inches H_2O. This will allow the tester to minimize the quantity of nitrogen introduced into those systems which cannot comply with the static leak standards.

6.11 Attach the Vapor Coupler Test assembly to the Stage I poppet or the "T" connector assembly to the Stage II vapor riser. Read the initial pressure of the storage tank and underground piping. If the initial pressure is greater than 0.5 inches H_2O, carefully bleed off the pressure, in accordance with all applicable safety procedures, in the storage tank and underground piping to less than 0.5 inches H_2O column.

7. Testing

7.1 Open the nitrogen gas supply valve and set the regulator delivery pressure within the allowable range determined in Section 6.9, and start the stopwatch. Pressurize the vapor system (or subsystem for individual vapor return line systems) to **at least** 2.2 inches H_2O initial pressure. It is critical to maintain the nitrogen flow until the pressure stabilizes, indicating temperature and vapor pressure stabilization in the tanks. Check the test equipment using leak detecting solution or a combustible gas detector to verify that all test equipment is leak tight.

7.1.1 If the time required to achieve the initial pressure of two (2.0) inches H_2O exceeds twice the time derived from Equation 9.3, stop the test and use liquid leak detector, or a combustible gas detector, to find the leak(s) in the system. Repair or replace the faulty component(s) and restart the test pursuant to Section 7.1.

7.2 Close and disconnect the nitrogen supply. Start the stopwatch when the pressure has decreased to the initial starting pressure of two (2.0) inches H_2O.

7.3 At one-minute intervals during the test, record the system pressure. After five minutes, record the final system pressure. See the applicable of Table IA (or Equation 9.1) or IB (or Equation 9.2) to determine the acceptability of the final system static pressure results. For intermediate values of ullage in Table IA and IB, linear interpolation may be employed.

7.4 If the system failed to meet the criteria set forth in Table I (or the appropriate equation in Section 9), repressurize the system and check all accessible vapor connections using leak detector solution or a combustible gas detector. If vapor leaks in the system are encountered, repair or replace the defective component and repeat the test. Potential sources of leaks include nozzle check valves, pressure/vacuum relief valves, containment box drain valve assemblies, and plumbing connections at the risers.

7.4.1 If the facility fails to comply with the static leak test standards and the Stage I system utilizes a non-CARB-certified drain valve equipped containment box, which was installed prior to July 1, 1992, for which a CARB-certified replacement drain valve assembly is not marketed, the following two subsections shall apply:

7.4.1.1 The drain valve may be removed and the port plugged. Retest the system. If the facility complies with the static leak test standards under these conditions, the facility shall be considered complying with the requirements, provided that the manufacturer and model number of the containment box and the date of installation are submitted with the test results.

7.4.1.2 The criteria set forth in subsection 7.4.1.1 shall not apply after July 1, 1996.

7.5 After the remaining system pressure has been relieved, remove the Vapor Coupler Test Assembly or "T" connector assembly and reconnect the vapor control hose, if applicable.

7.6 If the vapor control system utilizes individual vapor return lines, repeat the leak test for each gasoline grade. Avoid leaving any vapor return line open longer than is necessary to install or remove the "T" connector assembly.

8. Post-Test Procedures

8.1 Use the applicable of Table IA or IB, or the applicable of Equations 9.1 or 9.2, to determine the compliance status of the facility by comparing the final five-minute pressure with the minimum allowable final pressure.

8.1.1 For balance Stage II systems use Table IA or the applicable of Equation 9.1 to determine compliance.

8.1.2 For vacuum-assist Stage II systems use Table IB or the applicable of Equation 9.2 to determine compliance.

9. Calculations

9.1 For Stage II Balance Systems, the minimum allowable five-minute final pressure, with an initial pressure of two (2.0) inches H_2O, shall be calculated as follows:

[Equation 9-1]

$$P_f = 2e^{\frac{-760.490}{V}} \qquad \text{if N = 1-6}$$

$$P_f = 2e^{\frac{-792.196}{V}}$$ if N = 7-12

$$P_f = 2e^{\frac{-824.023}{V}}$$ if N = 13-18

$$P_f = 2e^{\frac{-855.974}{V}}$$ if N = 19-24

$$P_f = 2e^{\frac{-888.047}{V}}$$ if N > 24

Where:

N = The number of affected nozzles. For manifolded systems, N equals the total number of nozzles. For dedicated plumbing configurations, N equals the number of nozzles serviced by the tank being tested.
P_f = The minimum allowable five-minute final pressure, inches H_2O
e = A dimensionless constant approximately equal to 2.718
2 = The initial starting pressure, inches H_2O
V = The total ullage affected by the test, gallons

9.2 For Stage II Vacuum Assist Systems, the minimum allowable five-minute final pressure, with an initial pressure of two (2.0) inches H_2O, shall be calculated as follows:

[Equation 9-2]

$$P_f = 2e^{\frac{-500.887}{V}}$$ if N = 1-6

$$P_f = 2e^{\frac{-531.614}{V}}$$ if N = 7-12

$$P_f = 2e^{\frac{-562.455}{V}}$$ if N = 13-18

$$P_f = 2e^{\frac{-593.412}{V}}$$ if N = 19-24

$$P_f = 2e^{\frac{-624.483}{V}}$$ if N > 24

Where:

N = The number of affected nozzles. For manifolded systems, N equals the total number of nozzles. For dedicated plumbing configurations, N equals the number of nozzles serviced by the tank being tested.
P_f = The minimum allowable five-minute final pressure, inches H_2O
e = A dimensionless constant approximately equal to 2.718
2 = The initial starting pressure, inches H_2O
V = The total ullage affected by the test, gallons

9.3 The minimum time required to pressure the system ullage to two (2.0) inches H_2O shall be calculated as follows:

[Equation 9-3]

$$t_2 = \frac{V}{[1522]F}$$

Where:

t_2	=	The minimum time to pressurize the ullage to two inches H_2O, minutes
V	=	The total ullage affected by the test, gallons
F	=	The nitrogen flowrate into the system, CFM
1522	=	The conversion factor for pressure and gallons

9.4 If the policy of the local district requires an allowable tolerance for testing error, the minimum allowable five-minute final pressure, including testing error, shall be calculated as follows:

[Equation 9-4]

$$P_{f-E} = 2 - \left[1 + \left(\frac{E}{100}\right)\right] \cdot [408.9 - (P_f + 406.9)]$$

Where:

P_{f-E}	=	The minimum allowable five-minute final pressure including allowable testing error, inches H_2O
E	=	The allowable testing error, percent
P_f	=	The minimum allowable five-minute final pressure calculated in Equations 9-1 or 9-2, inches H_2O
2	=	The initial starting pressure, inches H_2O
408.9	=	Atmospheric pressure plus the initial starting pressure, inches H_2O
406.9	=	Atmospheric pressure, inches H2O

10. Reporting

10.1 The calculated ullage and system pressures for each five-minute vapor control system test shall be reported as shown in Form 1. Be sure to include the Stage I system type (two-point or coaxial), the Stage II system type, whether the system is manifolded, and the one-minute pressures during the test. The tester may either provide all information listed in Form 1 in the comprehensive test report or include a copy of this form along with the comprehensive written report.

Form 1

Source Test Results
Static Leak Test

Date: _____ Time:_____ Application No._____

GDF Name and address: _____

Stage II system (check one): Vapor Balance [ ]
Vacuum Assist [ ] Type: _____

Stage I type (check one): Two point [ ] Manifolded? Yes [ ]
Coaxial [ ] No [ ]

Tank #				
Product grade				
Actual tank capacity (gallons)				
Gasoline volume (gallons)				
Ullage (gallons)				
Initial pressure of UST, inches H_2O				
Number of nozzles served by tank				
Test location: **(A)** Stage I vapor coupler or **(B)** Stage II riser				
Initial Pressure , inches H_2O **(2.0)**				
Pressure after 1 min. (inches H_2O)				
Pressure after 2 min. (inches H_2O)				
Pressure after 3 min. (inches H_2O)				
Pressure after 4 min. (inches H_2O)				
Final Pressure after 5 min. (inches H_2O)				
Allowable Final Pressure: Table IA, Table 1B, Equations 9.1, 9.2				
Test Status **[Pass** or **Fail]**				

Tests Conducted By: _____

Test Company:_____
Date of Tests:_____

Tests Witnessed By: _____

TABLE IA

STAGE II BALANCE SYSTEMS

PRESSURE DECAY LEAK RATE CRITERIA

INITIAL PRESSURE OF 2 INCHES OF H_2O

MINIMUM PRESSURE AFTER 5 MINUTES, INCHES OF H_2O

	NUMBER OF AFFECTED NOZZLES				
ULLAGE, GALLONS	01-06	07-12	13-18	19-24	> 24
500	**0.44**	**0.41**	**0.38**	**0.36**	**0.34**
550	0.50	0.47	0.45	0.42	0.40
600	**0.56**	**0.53**	**0.51**	**0.48**	**0.46**
650	0.62	0.59	0.56	0.54	0.51
700	**0.67**	**0.64**	**0.62**	**0.59**	**0.56**
750	0.73	0.70	0.67	0.64	0.61
800	**0.77**	**0.74**	**0.71**	**0.69**	**0.66**
850	0.82	0.79	0.76	0.73	0.70
900	**0.86**	**0.83**	**0.80**	**0.77**	**0.75**
950	0.90	0.87	0.84	0.81	0.79
1,000	**0.93**	**0.91**	**0.88**	**0.85**	**0.82**
1,200	1.06	1.03	1.01	0.98	0.95
1,400	**1.16**	**1.14**	**1.11**	**1.09**	**1.06**
1,600	1.24	1.22	1.19	1.17	1.15
1,800	**1.31**	**1.29**	**1.27**	**1.24**	**1.22**
2,000	1.37	1.35	1.32	1.30	1.28
2,200	**1.42**	**1.40**	**1.38**	**1.36**	**1.34**
2,400	1.46	1.44	1.42	1.40	1.38
2,600	**1.49**	**1.47**	**1.46**	**1.44**	**1.42**
2,800	1.52	1.51	1.49	1.47	1.46
3,000	**1.55**	**1.54**	**1.52**	**1.50**	**1.49**
3,500	1.61	1.59	1.58	1.57	1.55
4,000	**1.65**	**1.64**	**1.63**	**1.61**	**1.60**
4,500	1.69	1.68	1.67	1.65	1.64
5,000	**1.72**	**1.71**	**1.70**	**1.69**	**1.67**
6,000	1.76	1.75	1.74	1.73	1.72
7,000	**1.79**	**1.79**	**1.78**	**1.77**	**1.76**
8,000	1.82	1.81	1.80	1.80	1.79
9,000	**1.84**	**1.83**	**1.83**	**1.82**	**1.81**
10,000	1.85	1.85	1.84	1.84	1.83
15,000	**1.90**	**1.90**	**1.89**	**1.89**	**1.89**
20,000	1.93	1.92	1.92	1.92	1.91
25,000	**1.94**	**1.94**	**1.94**	**1.93**	**1.93**

Note:For manifolded Stage II Balance Systems, the **"Number of Affected Nozzles"** shall be the total of all gasoline nozzles. For dedicated return configurations, the **"Number of Affected Nozzles"** shall be the total of those nozzles served by the tank being tested.

TABLE IB

STAGE II ASSIST SYSTEMS

PRESSURE DECAY LEAK RATE CRITERIA

INITIAL PRESSURE OF 2 INCHES OF H_2O

MINIMUM PRESSURE AFTER 5 MINUTES, INCHES OF H_2O

	NUMBER OF AFFECTED NOZZLES				
ULLAGE, GALLONS	01-06	07-12	13-18	19-24	> 24
500	**0.73**	**0.69**	**0.65**	**0.61**	**0.57**
550	0.80	0.76	0.72	0.68	0.64
600	**0.87**	**0.82**	**0.78**	**0.74**	**0.71**
650	0.93	0.88	0.84	0.80	0.77
700	**0.98**	**0.94**	**0.90**	**0.86**	**0.82**
750	1.03	0.98	0.94	0.91	0.87
800	**1.07**	**1.03**	**0.99**	**0.95**	**0.92**
850	1.11	1.07	1.03	1.00	0.96
900	**1.15**	**1.11**	**1.07**	**1.03**	**1.00**
950	1.18	1.14	1.11	1.07	1.04
1,000	**1.21**	**1.18**	**1.14**	**1.10**	**1.07**
1,200	1.32	1.28	1.25	1.22	1.19
1,400	**1.40**	**1.37**	**1.34**	**1.31**	**1.28**
1,600	1.46	1.43	1.41	1.38	1.35
1,800	**1.51**	**1.49**	**1.46**	**1.44**	**1.41**
2,000	1.56	1.53	1.51	1.49	1.46
2,200	**1.59**	**1.57**	**1.55**	**1.53**	**1.51**
2,400	1.62	1.60	1.58	1.56	1.54
2,600	**1.65**	**1.63**	**1.61**	**1.59**	**1.57**
2,800	1.67	1.65	1.64	1.62	1.60
3,000	**1.69**	**1.68**	**1.66**	**1.64**	**1.62**
3,500	1.73	1.72	1.70	1.69	1.67
4,000	**1.76**	**1.75**	**1.74**	**1.72**	**1.71**
4,500	1.79	1.78	1.77	1.75	1.74
5,000	**1.81**	**1.80**	**1.79**	**1.78**	**1.77**
6,000	1.84	1.83	1.82	1.81	1.80
7,000	**1.86**	**1.85**	**1.85**	**1.84**	**1.83**
8,000	1.88	1.87	1.86	1.86	1.85
9,000	**1.89**	**1.89**	**1.88**	**1.87**	**1.87**
10,000	1.90	1.90	1.89	1.88	1.88
15,000	**1.93**	**1.93**	**1.93**	**1.92**	**1.92**
20,000	1.95	1.95	1.94	1.94	1.94
25,000	**1.96**	**1.96**	**1.96**	**1.95**	**1.95**

Note:For manifolded Stage II Assist Systems, the **"Number of Affected Nozzles"** shall be the total of all gasoline nozzles. For dedicated return configurations, the **"Number of Affected Nozzles"** shall be the total of those nozzles served by the tank being tested.

3745-21-10 APPENDIX B

DYNAMIC PRESSURE PERFORMANCE TEST
(taken from BAAQMD test procedure ST-27)

1. APPLICABILITY

1.1 This procedure is used to verify compliance with the applicable dynamic back pressure limits imposed on any Stage II vapor control system. The applicability of the following Alternate Methods is dependent upon the regulatory requirements imposed by the California Air Resources Board (CARB) Executive Order.

1.1.1 **Alternate Method 1**. This procedure is applicable if the dynamic back pressure standards are imposed from the nozzle to the gasoline storage tank, provided remote vapor check valves are not part of the Stage II system.

1.1.2 **Alternate Method 2**. This procedure is applicable if the dynamic back pressure standards are imposed from the Stage II riser to the gasoline storage tank, provided there is no vacuum-producing device located between the riser and tank.

1.1.3 **Alternate Method 3**. This procedure is applicable if the dynamic back pressure standards are imposed at the nozzle/vehicle interface during vehicle fueling.

1.1.4 **Alternate Method 4**. This procedure shall be conducted, in conjunction with the applicable of Alternate Methods 1, 2, or 3 if the Stage II system utilizes an incinerator.

1.2 Alternate Methods 1 and 2 shall be conducted with the Stage I vapor poppet **open**. Alternate Methods 3 and 4 shall be conducted with the poppet **closed**.

1.3 Other Alternate Methods may be used provided that written approval has been granted by the Ohio EPA, Division of Air Pollution Control. Such approval shall be based upon demonstrated equivalency of any proposed methodology.

2. PRINCIPLE

2.1 Using Alternate Methods 1, 2, or 4, the dynamic back pressure during vehicle fueling is simulated by passing nitrogen through the Stage II vapor control system at specified rates. The resultant dynamic back pressure is measured using a pressure gauge, or equivalent device. Alternate Method 3 is a direct measurement of the pressure at the nozzle/fillpipe interface during gasoline dispensing. Liquid blockages in the vapor return lines are also detected using these Methods.

3. RANGE

3.1 The minimum and maximum dynamic back pressures that can be measured are dependent upon the range of the pressure gauges used. Required gauge ranges are as follows:

3.1.1	**Alternate Method 1**.	0-0.5 and 0-2 inches H_20.
3.1.2	**Alternate Method 2**.	0-0.25, 0-1, and 0-2 inches H_2O.
3.1.3	**Alternate Method 3**.	-1.0-+1.0 inches H_2O.
3.1.4	**Alternate Method 4**.	0-0.5 and 0-1 inches H_2O.

3.2 If mechanical pressure gauges are employed, the minimum diameter of the gauge face shall be four inches, and the minimum accuracy of the gauge shall be three percent of full scale.

3.3 If an electronic pressure measuring device is used, the full-scale range of the device shall not shall not exceed 0-10 inches H_2O with a minimum accuracy of 0.5 percent of full scale. A 0-20 inches H_2O device may be used provided that the equivalent accuracy is not less than 0.25 percent of full-scale.

4. INTERFERENCES

4.1 Any leaks in the nozzle vapor path, vapor hose, or underground vapor return piping may result in erroneously low dynamic back pressure measurements.

4.2 For those Stage II systems possessing a design incompatible with this test procedure, testing shall be conducted in accordance with the procedures specified in the applicable CARB Executive Order.

5. APPARATUS

5.1 Nitrogen High Pressure Cylinder with Pressure Regulator. Use a high pressure nitrogen cylinder capable of maintaining a pressure of 2000 psig and equipped with a compatible two-stage pressure regulator and a one psig relief valve. The nitrogen cylinder **must** be grounded and the one psig (maximum) relief valve **must** be present during the test.

5.2 Rotameter. Use a calibrated rotameter capable of accurately measuring nitrogen flowrate(s) applicable for the imposed dynamic back pressure limits.

5.3 Pressure Gauges. Use differential pressure gauges, or equivalent, as specified in the applicable subsection of Section 3.1.

5.4 Automobile fillpipe. Use an automobile fillpipe, if applicable, known to be compatible with all bellows-equipped vapor control nozzles, and equipped with a pressure tap. See Figure 1.

5.5 Nitrogen. Use commercial grade nitrogen.

5.6 Hand Pump. Use a gasoline compatible hand pump, if applicable, to drain any gasoline from condensate pots.

5.7 Stopwatch. For Alternate Method 3, use a stopwatch, or equivalent, accurate to within 0.5 seconds.

6. PRE-TEST PROCEDURES

6.1 **Alternate Method 1.** The following subsections are applicable for those Stage II systems where a limitation is imposed on the dynamic back pressure between the nozzle and the gasoline storage tank, provided that remote vapor check valves are not employed. For those Stage II systems which **do not** utilize a remote vapor check valve, assemble the apparatus as shown in Figure 1, ensuring that the riser shut-off valve on the test equipment is closed. If a Hirt Stage II system is used, the vacuum producing device shall be turned off during this test.

6.1.1 Assemble the Dynamic Pressure Performance Test Assembly as shown in Figure 1.

6.1.2 The test equipment **must** be leak-checked prior to use. Plug the nozzle end of the auto fillpipe and open the nitrogen cylinder. Adjust the flow meter control valve until a pressure of 50 percent of full scale is indicated on the high range pressure gauge. Close the nitrogen cylinder valve and any toggle valves. A pressure decay of less than 0.2 inches H_2O, in five minutes, is considered acceptable.

6.1.3 Perform an initial visual examination for vapor leaks at the nozzles and hoses of the Stage II system to be tested. All leak sources shall be repaired or the component(s) removed and replaced prior to testing.

6.1.4 The Stage I vapor poppet shall be propped open in such a manner that the valve is not damaged. This may be accomplished using a Dynamic Pressure Release Assembly as shown in Figure 2.

6.1.5 Pour a minimum of two (2) gallons of gasoline into each and every Stage II vapor return riser. This gasoline may be introduced into the Stage II riser in any appropriate manner. Alternatively, a minimum of twenty gallons of gasoline may be introduced into the Stage II riser furthest from the gasoline storage tank, provided that the riser is common to all products available at that dispenser. If product-specific risers are employed, a minimum of seven gallons, per product grade, may be introduced into the riser of each product which is furthest from the gasoline storage tank.

6.1.6 Allow fifteen (15) minutes for liquid in the vapor return piping to drain.

6.1.7 Completely drain any gasoline from the spout and bellows of each nozzle.

6.1.8 For those vapor piping configurations which utilize a condensate pot, drain the pot prior to testing.

6.2 **Alternate Method 2**.

6.2.1 Assemble the Capped "T" Assembly as shown in Figure 3.

6.2.2 Open the Stage I vapor poppet for the affected tank(s).

6.2.3 Pour a minimum of two (2) gallons of gasoline into each and every Stage II vapor return riser. This gasoline may be introduced into the Stage II riser(s) in any appropriate manner.

6.2.4 Allow fifteen (15) minutes for liquid in the vapor return piping to drain.

6.2.5 For those vapor piping configurations which utilize a condensate pot, drain the pot prior to testing.

6.3 Alternate Method 3.

6.3.1 Assemble the Torus Pressure Test Assembly as shown in Figure 4.

6.3.2 The Stage I vapor poppet shall remain closed during this test.

6.4 Alternate Method 4.

6.4.1 Assemble the Vent Pipe Pressure Assembly as shown in Figure 5.

6.4.2 Carefully remove the vent pipe pressure/vacuum (P/V) valve.

6.4.3 Open the Stage I vapor poppet for the affected tank(s).

6.4.4 Insure that the collection unit of the Stage II system is turned off.

7. TESTING

7.1 Alternate Method 1. Insert the nozzle into the fillpipe of the Dynamic Pressure Performance Test Unit as shown in Figure 1 below, ensuring that a tight seal at the fillpipe/nozzle interface is achieved.

7.1.1 Connect the nitrogen supply to the test assembly.

7.1.2 Open the nitrogen supply, set the delivery pressure to 5 psig, and use the flowmeter control valve to adjust the flowrate to lowest of the required nitrogen flowrates.

7.1.3 A pulsating gauge needle indicates nitrogen passing through a liquid obstruction in the vapor return system. Close the flow meter control valve, redrain the nozzle and hose assembly, and repeat the test. If this condition re-occurs, the cause of the liquid trap in the system must be corrected.

Figure 1

Dynamic Pressure Performance Test Assembly

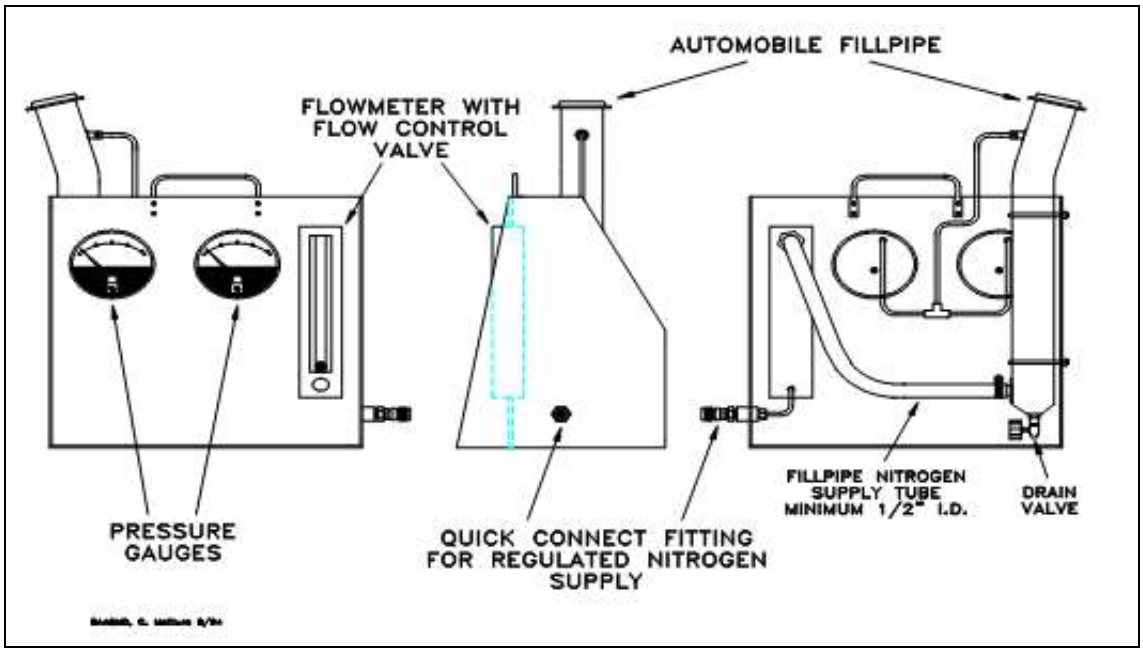

7.1.4 The following information shall be recorded on the field data sheet, as shown in Form 1:

(a) Nozzle Number
(b) Gauge needle action
(c) Dynamic back pressure, inches H_2O

Specified nitrogen flowrates and associated maximum allowable Dynamic Backpressures are included in Form 1.

7.1.5 Repeat subsections 7.1.2 through 7.1.4 at all required nitrogen flowrates for each and every nozzle.

7.1.6 Close and replace the dust cover on the Stage I poppet.

Figure 2

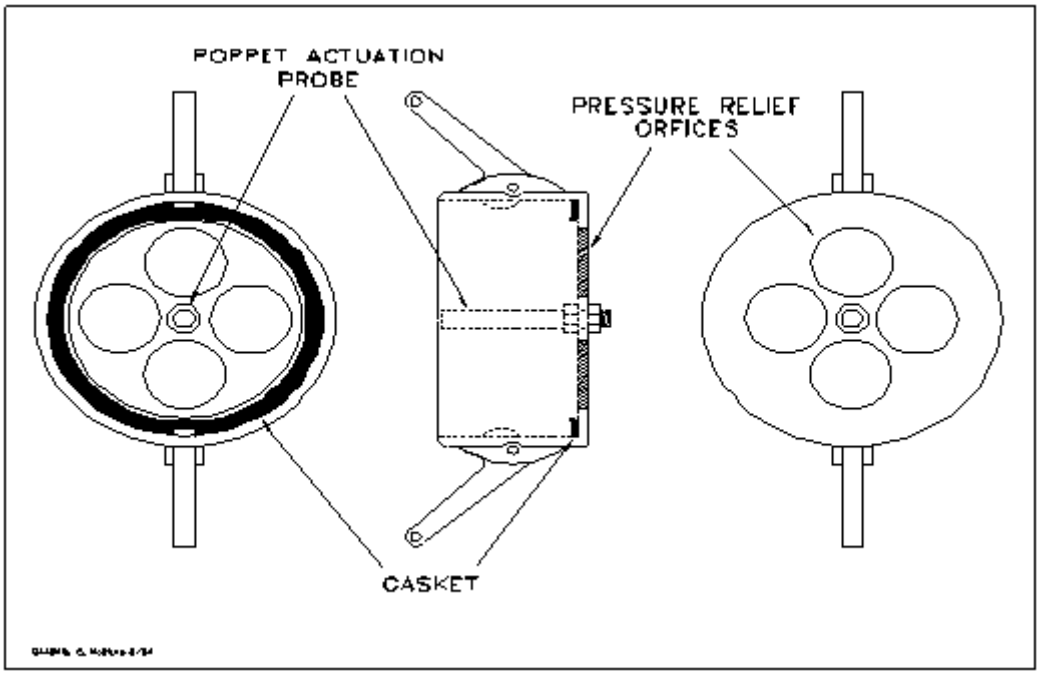

Dynamic Pressure Release Assembly

7.2 Alternate Method 2. Those Stage II systems subject to regulatory limitations on the dynamic back pressure between the Stage II riser and gasoline storage tank shall be tested using this methodology.

7.2.1 Disconnect the Stage II riser and install the "T" assembly as shown in Figure 3 below.

Figure 3

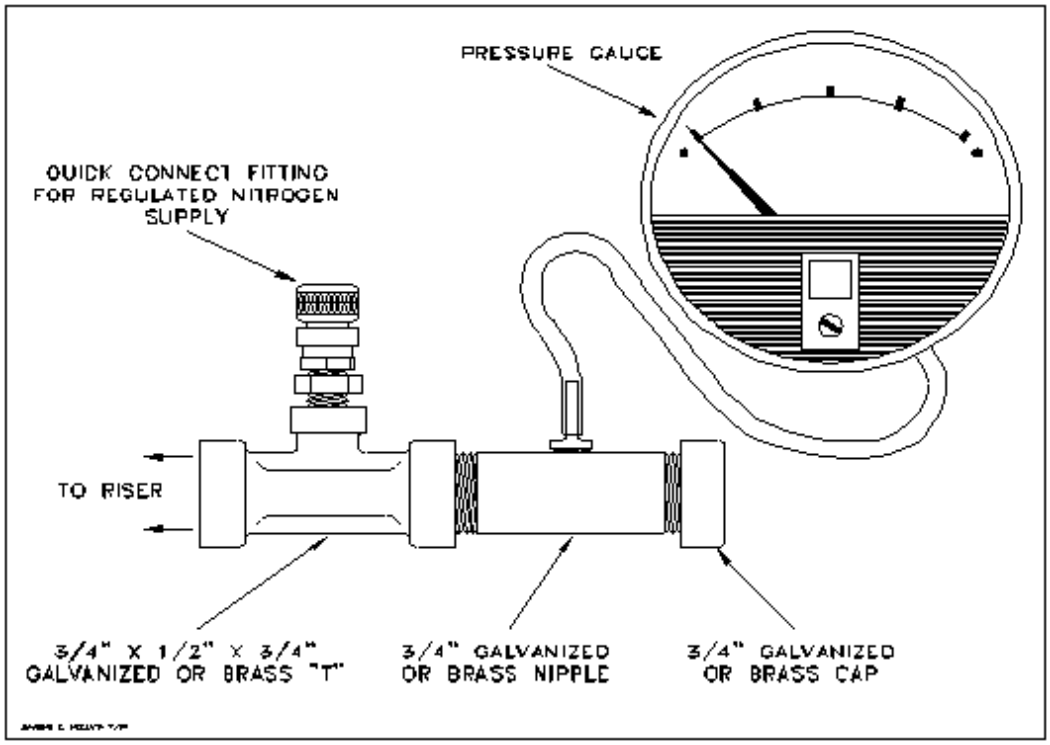

Capped "T" Assembly

7.2.2 Connect the nitrogen supply to the "T" assembly.

7.2.3 Open the nitrogen supply, set the delivery pressure to 5 psig, and use the flowmeter control valve to adjust the flowrate to lowest of the required nitrogen flowrates.

7.2.4 A pulsating gauge needle indicates nitrogen passing through a liquid obstruction in the vapor return plumbing. If this occurs, the cause of the liquid trap must be corrected.

7.2.5 The following information shall be recorded on the field data sheet, as shown in Form 2:

(a) Riser Number
(b) Gauge needle action
(c) Dynamic back pressure, inches H_2O

Specified nitrogen flowrates and associated maximum allowable Dynamic Backpressures are included in Form 2.

7.2.6 Repeat subsections 7.2.3 through 7.2.5 at all required nitrogen flowrates for each and every riser.

7.3 **Alternate Method 3.** Those bellows-equipped Stage II systems subject to regulatory limitations on the dynamic back pressure at the nozzle/fillpipe interface during gasoline dispensing shall use the following methodology.

7.3.1 Assemble the Torus Pressure Test Assembly (Donut) as shown in Figure 4 below

7.3.2 Insert the nozzle spout through the inner hole of the donut.

7.3.3 Insert and latch the nozzle in the vehicle fillpipe. Visually insure that a tight connection is made between the donut and fillpipe.

Figure 4

Torus Pressure Test Assembly

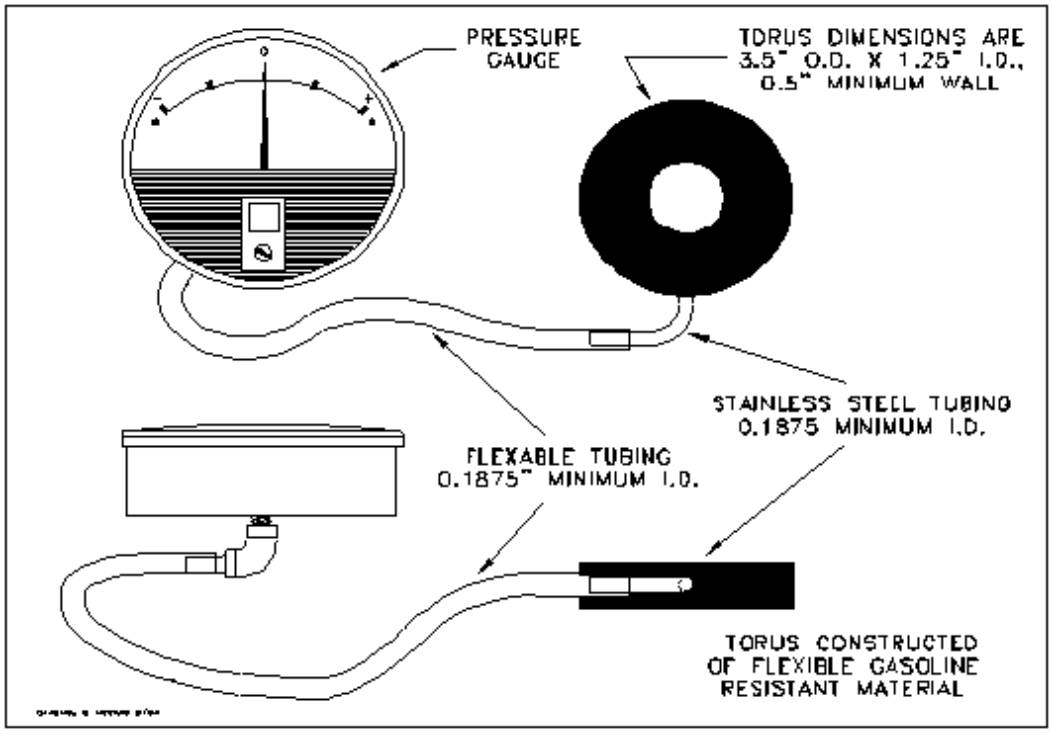

7.3.4 Activate the dispenser, set the nozzle hold-open latch on low, and after at least one gallon has been dispensed start the stopwatch. Dispense a minimum of four gallons of gasoline.

Use the stopwatch to accurately time the dispensing rate. Record the total gallons dispensed and calculate the flow rate in gallons per minute. The following data shall be recorded on the field data sheet as shown in Form 3:

(a) Nozzle number and gasoline grade
(b) Gallons dispensed during test
(c) Maximum dynamic back pressure, inches H_2O
(d) Minimum dynamic back pressure, inches H_2O
(e) The average dispensing rate, gallons per minute
(f) Allowable backpressure range specified in the Executive Order

7.3.5 This Alternate Method shall only be conducted with the Stage I vapor poppet closed,

since gasoline is being dispensed during the test.

7.4 **Alternate Method 4**. Those Stage II systems which utilize an incinerator shall conduct this test in conjunction with the applicable of Alternate Method 1, 2, or 3. This procedure verifies proper drainage of gasoline from the base of the vent pipe to the gasoline storage tank.

7.4.1 After verifying compliance with the dynamic back pressure standards, pursuant to the applicable of Alternate Methods 1, 2, or 3, close the Stage I vapor poppet.

7.4.2 Remove the pressure/vacuum (P/V) valve(s) from each vent pipe.

7.4.3 Carefully pour a minimum of five gallons of gasoline down each vent pipe.

7.4.4 Install the Vent Pipe Pressure Assembly as shown in Figure 5 below. Open the Stage I poppet(s) on all affected tanks.

Figure 5

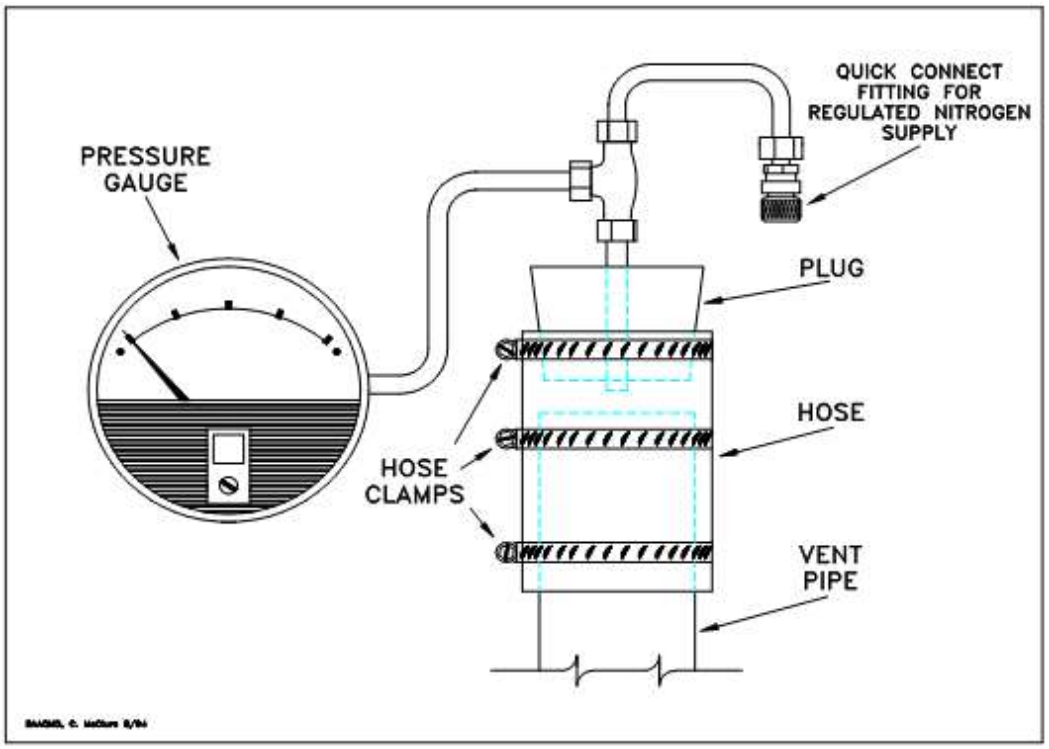

Vent Pipe Pressure Assembly

7.4.5 Connect the nitrogen supply to the Vent Pipe Pressure Assembly.

7.4.6 Open the nitrogen supply and adjust the flowrate to 60 CFH.

7.4.7 After a minimum of thirty seconds, record the dynamic back pressure.

7.4.8 A dynamic back pressure, from the top of the vent pipe to the storage tank, of less than 0.5 inches H_2O shall be considered acceptable.

7.4.9 Remove the Vent Pipe Pressure Assembly, carefully reinstall the P/V valve, and close the Stage I poppets.

8. REPORTING

8.1 Results of the dynamic back pressure test shall be reported as shown below:

8.1.1	Alternate Method 1	Use Form 1
8.1.2	Alternate Method 2	Use Form 2
8.1.3	Alternate Method 3	Use Form 3
8.1.4	Alternate Method 4	Include on applicable of Forms 1, 2, or 3

Form 1

Summary of Test Results
Dynamic Pressure Performance

Date: _____ Time: _____ Application No._____

GDF Name and address: _____

Quantity _____ (gallons) of gasoline introduced into Stage II (check one): Riser [ ]
Bellows [ ]

Stage II system type: (Manufacturer and Executive Order number)_____

Nozzle No.	40 CFH .16" MAX	60 CFH .35" MAX	80 CFH .62" MAX	**PASS or FAIL**	Nozzle No.	40 CFH .16" MAX	60 CFH .35" MAX	80 CFH .62" MAX	**PASS or FAIL**

Did gauge needle pulsate or peg at any flow rate during test? No [ ] **PASS**

Yes [ ] **FAIL**

Indicate location of storage tank(s), condensate pot(s), pump(s), and location where gasoline was introduced into the vapor return system on reverse side of this page:

Tests Conducted By:_____

Test Company: _____**Date of Tests:**_____

Tests Witnessed By: _____

Form 2

Summary of Test Results
Dynamic Pressure Performance

Date: _____ Time: _____ Application No._____

GDF Name and address: _____

Quantity _____ (gallons) of gasoline introduced into Stage II riser.

Stage II system type: (Manufacturer and Executive Order Number)_____

Riser No.	40 CFH .16" MAX	60 CFH .35" MAX	80 CFH .62" MAX	**PASS or FAIL**	Riser No.	40 CFH .16" MAX	60 CFH .35" MAX	80 CFH .62" MAX	**PASS or FAIL**

Did gauge needle pulsate or peg at any flow rate during test? No [ ] **PASS**

Yes [ ] **FAIL**

Indicate location of storage tank(s), condensate pot(s), pump(s), and location where gasoline was introduced into the vapor return system on reverse side of this page:

Tests Conducted By:_____

Test Company: _____ **Date of Tests:** _____

Tests Witnessed By: _____

Form 3

Summary of Test Results
Dynamic Pressure Performance

Date: _____ Time: _____ Application No._____

GDF Name and address: _____

Stage II system type: (Manufacturer and Executive Order Number)_____

Nozzle No.	Gas Grade	Gallons Disp.	Max. B.P.	Min. B.P.	Disp Rate	Allow-able B.P.	**PASS OR FAIL**

Indicate location of storage tank(s), condensate pot(s), pump(s), and location where gasoline was introduced into the vapor return system on reverse side of this page:

Tests Conducted By:_____

Test Company: _____ **Date of Tests:** _____

Tests Witnessed By: _____

STAGE II POST TEST INSPECTION FORM

Facility Name:	Application #
Address:	County:
City, State, Zip	

DISPENSER AREA INSPECTION

[ ]	All Vapor pipes under the dispenser are capped, plugged, or re-attached.
[ ]	No leaks are present under dispenser, nor from hoses or nozzles.
[ ]	All impact valves are open on all product lines.
[ ]	All dispenser panels are correctly re-installed.
[ ]	All lock-outs or "Out of Service" bags are removed from dispenser nozzles.
[ ]	All tools, testing equipment, cones, and caution tape removed from dispenser area.

TANK AREA INSPECTION

[ ]	Isolation plugs are removed from vapor risers (if applicable).
[ ]	All tank top components (plugs, caps, etc...) are reinstalled and secure.
[ ]	"Drop out tank" free of product and functioning properly (with all caps replaced).
[ ]	Submersible pit(s) free from leaks.
[ ]	All tools, testing equipment, cones, and caution tape removed from tank area.
[ ]	All lids and covers are properly replaced.

Site Mgr. NAME:	Site Mgr. Signature:	Date:
Testers NAME:	Testers Signature:	Date:
Testing Company and Address:		

3745-21-11 **Reasonably available control technology studies for ozone non-attainment areas.**

This rule was rescinded as of 4/2/09.

3745-21-12 **Control of volatile organic compound emissions from commercial bakery oven facilities.**

[Comment: For dates and availability of non-regulatory government publications, publications of recognized organizations and associations, federal rules, and federal statutory provisions referenced in this rule, see the "Incorporation by Reference" paragraph at the end of rule 3745-21-01 of the Administrative Code.]

(A) Applicability.

(1) Applicability for the Cincinnati area.

(a) Except as otherwise provided in paragraph (A)(1)(b) of this rule, the requirements of paragraphs (D) to (I) of this rule shall apply to each commercial bakery oven facility that meets both of the following criteria:

(i) The facility is located in any of the following counties: Butler, Clermont, Hamilton, or Warren; and

(ii) The facility has a total uncontrolled potential to emit for volatile organic compound (VOC) emissions equal to or greater than one hundred tons per year on or after May 27, 2005 as determined in accordance with paragraph (C) of this rule.

(b) Once a commercial bakery oven facility meets the applicability requirements of paragraph (A)(1)(a) of this rule on or after May 27, 2005, it is always subject to the requirements of paragraphs (D) to (I) of this rule, except as otherwise provided in paragraph (A)(1)(c) of this rule.

(c) In the event a commercial bakery oven facility meets the applicability requirements under paragraph (A)(1)(a) of this rule, but reduces its total uncontrolled potential to emit for volatile organic compounds to less than one hundred tons per year by no later than May 27, 2006, the facility is not subject to the requirements of paragraphs (D) to (I) of this rule. If such commercial bakery oven facility subsequently meets the applicability requirements of paragraph (A)(1)(a) of this rule, then it becomes subject to the requirements of paragraphs (D) to (I) of this rule.

(2) Applicability for the Cleveland-Akron-Lorain area.

(a) Except as otherwise provided in paragraph (A)(2)(b) of this rule, the requirements of paragraphs (D) to (I) of this rule shall apply to each commercial bakery oven facility that meets both of the following criteria:

(i) The facility is located in any of the following counties: Ashtabula, Cuyahoga, Geauga, lake, Lorain, Medina, Portage, or Summit; and

(ii) The facility has a total uncontrolled potential to emit for VOC emissions equal to or greater than one hundred tons per year on or after the effective date of this rule, as determined in accordance with paragraph (C) of this rule.

(b) Once a commercial bakery oven facility meets the applicability requirements of paragraph (A)(2)(a) of this rule on or after the effective date of this rule, it is always subject to the requirements of paragraphs (D) to (I) of this rule, except as otherwise provided in paragraph (A)(2)(c) of this rule.

(c) In the event a commercial bakery oven facility meets the applicability requirements under paragraph (A)(2)(a) of this rule, but reduces its total uncontrolled potential to emit for VOCs to less than one hundred tons per year by no later than twelve months after the effective date of this rule, the facility is not subject to the requirements of paragraphs (D) to (I) of this rule. If such commercial bakery oven facility subsequently meets the applicability requirements of paragraph (A)(2)(a) of this rule, then it becomes subject to the requirements of paragraphs (D) to (I) of this rule.

(B) Definitions.

The definitions applicable to this rule are contained in paragraphs (B) and (U) of rule 3745-21-01 of the Administrative Code.

(C) Determination of total uncontrolled potential to emit.

(1) The owner or operator of each commercial bakery oven facility shall calculate the facility's total uncontrolled potential to emit, UPTE(facility), for VOC emissions in tons per year, using either the equations in paragraphs (C)(1)(a) to (C)(1)(c) of this rule and the provisions in paragraphs (C)(2) to (C)(4) of this rule, or a USEPA administrator-approved alternative method if the use of that alternative method is approved in writing by the USEPA administrator for this purpose:

(a) UPTE(facility) equals the sum of the UPTE(oven) for all bakery ovens at the facility (in tons VOC per year)

(b) UPTE(oven) is calculated for each bakery oven as follows:

$$UPTE(oven) = P_A * EF_{VOC} * (1 \text{ ton}/2000 \text{ pounds})$$

where:

P_A = the bakery oven's maximum annual production rate for yeast-leavened finished bakery product (in tons of baked product per year).

EF_{VOC} = VOC emission factor for the bakery oven's yeast-leavened finished bakery product having the highest emission potential (in pounds of VOC per ton of baked product) for the bakery oven.

(c) The value of EF_{VOC}, expressed in pounds of VOC per ton of baked product (rounded off to two decimal places), is determined as follows:

$$EF_{VOC} = 0.95Y_i + 0.195t_i - 0.51S - 0.86t_s + 1.90$$

where:

Y_i = initial baker's per cent of yeast to the nearest tenth of a per cent.

t_i = total yeast action time in hours to the nearest tenth of an hour.

S = final (spike) baker's per cent of yeast to the nearest tenth of a per cent.

t_s = spiking time in hours to the nearest tenth of an hour.

(2) The owner or operator shall presume for purposes of calculating the uncontrolled potential to emit that both of the following conditions apply:

(a) Each facility production line and associated bakery oven are operating eight thousand seven hundred sixty hours per year at maximum capacity.

(b) Each facility production line is producing the product with the highest level of VOC emissions of those products that it may produce.

(3) A VOC emission factor based on emission testing can be used to calculate the facility's total uncontrolled potential to emit for VOC in tons per year. In the event emission testing is conducted, the emission testing results would be used instead of the VOC emission factor equation in paragraph (C)(1)(c) of this rule. Such emission testing shall be based on the test methods and procedures specified under paragraph (F) of this rule.

(4) The presumptions of paragraph (C)(2) of this rule would not apply where restrictions on operating hours and/or annual production rate are specified for the commercial bakery oven facility within a federally enforceable state operating permit, a federally enforceable permit-to-install, or a Title V permit that is issued pursuant to rule 3745-35-07, Chapter 3745-31, or Chapter 3745-77, respectively, of the Administrative Code as follows:

(a) For bakery ovens that are located within a county specified in paragraph (A)(1)(a)(i) of this rule and for which installation commenced before May 27, 2005, such restrictions must be in effect no later than May 27, 2006.

(b) For bakery ovens that are located within a county specified in paragraph (A)(1)(a)(i) of this rule and for which installation commenced on or after May 27, 2005, such restrictions must be in effect upon initial startup of the bakery oven.

(c) For bakery ovens that are located within a county specified in paragraph (A)(2)(a)(i) of this rule and for which installation commenced before the effective date of this rule, such restrictions must be in effect no later than twelve months after the effective date of this rule.

(d) For bakery ovens that are located within a county specified in paragraph (A)(2)(a)(i) of this rule and for which installation commenced on or after the effective date of this rule, such restrictions must be in effect upon initial startup of the bakery oven.

(D) VOC emission control requirements.

(1) Except where exempted under paragraph (D)(2) of this rule, any owner or operator of a commercial bakery oven facility that is subject to this rule shall install and operate a VOC emission control system that reduces the VOC emissions from each bakery oven by at least ninety-five per cent by weight (i.e., an overall control efficiency of at least ninety-five per cent by weight).

(2) Exempted from the requirement of paragraph (D)(1) of this rule is any uncontrolled bakery oven with annual VOC emissions of less than 25.0 tons and average daily VOC emissions of less than one hundred ninety-two pounds. Average daily VOC emissions means the VOC emissions from a bakery oven in a calendar year (annual VOC emissions) divided by the number of days the bakery oven was employed for production during the calendar year.

(E) Compliance dates.

(1) Except where otherwise specified within this rule, any owner or operator of a commercial bakery oven facility that is subject to this rule shall comply with the requirements of this rule by no later than the following dates:

(a) For any bakery oven which is located within a county specified in paragraph (A)(1)(a)(i) of this rule and for which installation commenced before May 27, 2005, the compliance date of the bakery oven is the initial startup of the bakery oven or May 27, 2006, whichever is later.

(b) For any bakery oven which is located within a county specified in paragraph (A)(1)(a)(i) of this rule and for which installation commenced on or after May 27, 2005, the compliance date of the bakery oven is the date of initial startup of the bakery oven.

(c) For any bakery oven which is located within a county specified in paragraph (A)(2)(a)(i) of this rule and for which installation commenced before the effective date of this rule, the compliance date of the bakery oven is the initial startup of the bakery oven or twelve months from the effective date of this rule, whichever is later.

(d) For any bakery oven which is located within a county specified in paragraph (A)(2)(a)(i) of this rule and for which installation commenced on or after the effective date of this rule, the compliance date of the bakery oven is the date of initial startup of the bakery oven.

(2) In the event a commercial bakery oven facility reduces its total uncontrolled potential to emit pursuant to paragraph (A)(1)(c) or paragraph (A)(2)(c) of this rule, the date on which the facility subsequently meets the applicability criteria of paragraph (A)(1)(a) or paragraph (A)(2)(a) of this rule is the date the facility becomes subject to this rule.

(3) In the event an uncontrolled bakery oven is exempted under paragraph (D)(2) of this rule and is later equipped with a VOC emission control system, the compliance date of the bakery oven pertaining to paragraph (D)(1) of this rule is the date of first startup of the installed VOC emission control system for the bakery oven. Until the date of first startup of the installed VOC emission control system for the bakery oven, the bakery oven shall continue to comply with the requirements of paragraph (D)(2) of this rule.

(4) The owner or operator of any commercial bakery oven facility subject to this rule shall demonstrate compliance with paragraph (D)(1) of this rule by testing the bakery oven and its VOC emission control system in accordance with paragraph (F) of this rule within ninety days after the bakery oven's compliance date.

(5) Additional testing of a bakery oven and its VOC emission control system in accordance with paragraph (F) of this rule may be required by the director to ensure continued compliance.

(F) Compliance testing requirements.

For any bakery oven subject to paragraph (D)(1) of this rule, the owner or operator shall demonstrate compliance by conducting compliance testing in accordance with the following requirements:

(1) The general provisions specified under paragraphs (A)(2) to (A)(5) of rule 3745-21-10 of the Administrative Code shall apply to the compliance testing.

(2) The test methods and procedures of paragraph (C) of rule 3745-21-10 of the Administrative Code shall be followed, except as specified below:

(a) The concentration of VOC in a gas stream or exhaust vent shall be determined by utilizing any of the methods specified under paragraph (C)(2) of rule 3745-21-10 of the Administrative Code.

(b) USEPA alternative test method ALT-020 titled "Negative Pressure Enclosure Qualitative Test Method for Bakery Ovens" may be used to demonstrate capture efficiency of a bakery oven. A bakery oven that passes this alternative test method and vents all of its oven exhaust gas streams, other than the purge stack, to a VOC control device has a VOC capture efficiency of one hundred per cent by weight.

(c) USEPA conditional test method CTM-042 titled "Use of Flame Ionization Detector-Methane Cutter Analysis Systems for VOC Compliance Testing of Bakeries" may be used to demonstrate the control efficiency of a VOC control device (thermal oxidizer or catalytic oxidizer) for a bakery oven.

(G) Monitoring and inspection requirements for controlled bakery ovens.

(1) For any bakery oven subject to paragraph (D)(1) of this rule, the owner or operator shall install and operate continuous monitoring and recording devices for the following operational parameters:

(a) The combustion temperature of any thermal incinerator;

(b) The inlet temperature and the temperature rise across the catalyst bed of any catalytic incinerator; and

(c) Any other parameter that the director may require the owner or operator to monitor.

(2) While operating the bakery oven, the owner or operator of the facility shall maintain the parameters listed in paragraphs (C)(1)(a) to (C)(1)(c) of this rule within the baseline operational data established during the most recent compliance test(s) that demonstrated compliance.

(3) The owner or operator shall inspect the VOC emission control system and monitoring equipment to assure that the control system is operating properly, and that no leaks or malfunctions have occurred or are occurring. The inspections shall be made at the frequency defined by the equipment

manufacturer, or as otherwise appropriate for each unit, component, or operation, but not less than monthly.

(4) The owner or operator shall record the results of each inspection in a permanent log to be retained on-site for a period of not less than five years and shall make the log available to the director or any authorized representative of the director for review during normal business hours.

(H) Recordkeeping and associated reporting requirements.

(1) The owner or operator of each commercial bakery oven facility subject to this rule shall keep the records required under paragraphs (H)(2) to (H)(5) of this rule on site for at least five years following the date of the record and shall make such records available to the director or any authorized representative of the director for review during normal business hours.

(2) The owner or operator shall keep monthly production period records of the following operational data for each yeast-leavened product for each bakery oven:

(a) The amount of raw product processed;

(b) The baker's per cent of yeast used (initial yeast and any spike yeast);

(c) The fermentation time (total time and any spiking time);

(d) The type of product baked;

(e) The amount of product baked; and

(f) Any other information that the director may determine to be necessary for determining that the facility is operated in continuous compliance with this rule.

(3) The owner or operator shall calculate monthly VOC emissions for each bakery oven and shall record the emission factor used for each product, including a citation of the source of the emission factor, and the results of the VOC emission calculations.

(4) For any uncontrolled bakery oven exempted under paragraph (D)(2) of this rule, the owner or operator shall record the VOC emissions from that bakery oven for the recent month and rolling twelve-month period within fifteen days after the end of each month. The owner or operator shall notify the appropriate Ohio environmental protection agency district office or local air agency of any record showing the bakery oven exceeded the applicable VOC emissions limit. A copy of such record shall be sent to the appropriate Ohio environmental protection

agency district office or local air agency within forty-five days after the exceedance occurs.

(5) For any bakery oven equipped with a VOC emission control system and subject to the paragraph (D)(1) of this rule, the owner or operator shall collect and record the following information each day of operation of the bakery oven:

(a) A log of operating time for the capture (collection) system, control device, monitoring equipment, and the associated bakery oven.

(b) For any thermal incinerator, all three-hour periods of operation during which the average combustion temperature was more than fifty degrees Fahrenheit below the average combustion temperature during the most recent performance test that demonstrated that the bakery oven was in compliance.

(c) For any catalytic incinerator, all three-hour periods of operation during which the average temperature of the process vent stream immediately before the catalyst bed is more than fifty degrees Fahrenheit below the average temperature of the process vent stream during the most recent performance test that demonstrated that the source was in compliance, and all three-hour periods of operation during which the average temperature difference across the catalyst bed is less than eighty per cent of the average temperature difference during the most recent performance test that demonstrated that the bakery oven was in compliance.

(d) For any VOC emission control equipment, any other information that the director may determine to be necessary for determining that the bakery oven is operating in continuous compliance with this rule.

(6) The owner or operator shall submit to the appropriate Ohio environmental protection agency district office or local air agency quarterly summaries of the records required by paragraph (H)(5) of this rule. These quarterly reports shall be submitted by April thirtieth, July thirty-first, October thirty-first, and January thirty-first, and shall cover the records for the previous calendar quarters.

(I) Requirements on applicability notification, compliance certification, and permit application.

(1) The owner or operator of a commercial bakery oven facility that is subject to this rule pursuant to paragraph (A)(1) of this rule and that has a bakery oven with an initial startup date before May 27, 2005 shall notify the appropriate Ohio environmental protection agency district office or local air agency in writing that the bakery oven is subject to this rule. The notification, which shall be submitted not later than sixty days after May 27, 2005 (or within sixty days after the

bakery oven becomes subject to this rule), shall provide the following information:

(a) Name and address of the owner or operator;

(b) Address (i.e., physical location) of the commercial bakery oven facility;

(c) Equipment description and Ohio EPA application number (if assigned) of the bakery oven;

(d) Identification of the VOC emissions requirement, the means of compliance, and the compliance date for the bakery oven; and

(e) Regarding an air pollution permit for the bakery oven, whichever of the following is applicable;

(i) Submission of an application for a permit-to-operate, modification, or renewal of a permit-to-operate in accordance with paragraph (B) of rule 3745-35-02 of the Administrative Code; or

(ii) Statement of intent to submit an application for a Title V permit or modification of a Title V permit in accordance with rule 3745-77-02 or rule 3745-77-08 of the Administrative Code, respectively.

(2) The owner or operator of a commercial bakery oven facility that is subject to this rule pursuant to paragraph (A)(1) of this rule and that has a bakery oven with an initial startup date on or after May 27, 2005 shall notify the appropriate Ohio environmental protection agency district office or local air agency in writing that the bakery oven is subject to this rule. The notification, which shall be submitted not later than either the date of initial startup of the bakery oven or sixty days after the May 27, 2005 (whichever is later), shall provide the information listed under paragraph (I)(1) of this rule. The application for a permit-to-install under rule 3745-31-02 of the Administrative Code may be used to fulfill the notification requirements of this paragraph.

(3) The owner or operator of a commercial bakery oven facility that is subject to this rule pursuant to paragraph (A)(2) of this rule and that has a bakery oven with an initial startup date before the effective date of this rule shall notify the appropriate Ohio environmental protection agency district office or local air agency in writing that the bakery oven is subject to this rule. The notification, which shall be submitted not later than sixty days after the effective date of this rule (or within sixty days after the bakery oven becomes subject to this rule), shall provide the information listed under paragraph (I)(1) of this rule.

(4) The owner or operator of a commercial bakery oven facility that is subject to this rule pursuant to paragraph (A)(2) of this rule and that has a bakery oven with an

initial startup date on or after the effective date of this rule shall notify the appropriate Ohio environmental protection agency district office or local air agency in writing that the bakery oven is subject to this rule. The notification, which shall be submitted not later than either the date of initial startup of the bakery oven or sixty days after the effective date of this rule (whichever is later), shall provide the information listed under paragraph (I)(1) of this rule. The application for a permit-to-install under rule 3745-31-02 of the Administrative Code may be used to fulfill the notification requirements of this paragraph.

(5) Compliance certification.

(a) The owner or operator of a commercial bakery oven facility that is subject to this rule shall notify the appropriate Ohio environmental protection agency district office or local air agency in writing within thirty days following the completion of any of the following requirements:

(i) For an uncontrolled bakery oven subject to the VOC emission requirement in paragraph (D)(2) of this rule, the first documented achievement of compliance with the requirements;

(ii) For a bakery oven subject to the VOC emission control requirement in paragraph (D)(1) of this rule:

(a) The completion of installation and initial use of a VOC emission control system for the bakery oven;

(b) The completion of installation and initial use of any monitoring devices required under paragraph (G) of this rule for the bakery oven; and

(c) The completion of any compliance testing conducted in accordance with paragraph (F) of this rule to demonstrate compliance with the applicable control requirement.

(b) The compliance certification under paragraph (I)(3)(a) of this rule shall provide the following, where applicable:

(i) A description of the requirements;

(ii) A description of the VOC emission control system;

(iii) A description of the monitoring devices;

(iv) A description of the records that document continuing compliance;

(v) The results of any compliance tests, including documentation of test data;

(vi) The results of any records that document continuing compliance, including calculations; and

(vii) A statement by the owner or operator of the commercial bakery oven facility as to whether the bakery oven has complied with the requirement(s).

Effective: 08/25/2008

R.C. 119.032 review dates: 02/21/2008 and 08/25/2013

CERTIFIED ELECTRONICALLY
Certification

08/15/2008
Date

Promulgated Under: 119.03
Statutory Authority: 3704.03(E)
Rule Amplifies: 3704.03(E), 3704.03(A)
Prior Effective Dates: 5/27/2005, 2/10/2006

3745-21-13 **Control of volatile organic compound emissions from reactors and distillation units employed in SOCMI chemical production.**

[Comment: For dates and availability of non-regulatory government publications, publications of recognized organizations and associations, federal rules, and federal statutory provisions referenced in this rule, see the "Incorporation by Reference" paragraph at the end of rule 3745-21-01 of the Administrative Code.]

(A) Rule applicability.

(1) Except as otherwise provided in paragraph (A)(2) of this rule, this rule shall apply to any reactor or distillation unit in a process unit that meets both of the following criteria:

(a) The process unit is located in Ashtabula, Butler, Clermont, Cuyahoga, Geauga, Hamilton, Lake, Lorain, Medina, Portage, Summit, or Warren county; and

(b) The process unit produces a SOCMI chemical.

(2) Excluded from the requirements of this rule are the following:

(a) Any reactor or distillation unit that is a batch operation.

(b) Any reactor or distillation unit that is regulated by paragraph (CC) or (EE) of rule 3745-21-09 of the Administrative Code.

(c) Any reactor or distillation unit included within an "early reduction program," as specified in 40 CFR part 63, and published in 57 Federal Register 61970 (December 29, 1992), evidenced by a timely enforceable commitment approved by USEPA.

(d) Any reactor regulated by subpart III or subpart RRR of 40 CFR part 60.

(e) Any distillation unit regulated by subpart NNN of 40 CFR part 60.

(3) For the purposes of paragraph (A)(2) of this rule, a reactor or distillation unit shall be considered regulated by a paragraph, rule or subpart if it is subject to the limits of that paragraph, rule, or subpart. A reactor or distillation unit is not considered regulated by a paragraph, rule, or subpart if it is not subject to the limits of that paragraph, rule, or subpart. For example, if the reactor or distillation unit is covered by an exemption in the paragraph, rule, or subpart, or the applicability criteria of the paragraph or subpart are not met, then the source is not subject to that paragraph, rule, or subpart.

(B) Definitions.

The definitions applicable to this rule are contained in paragraphs (B) and (V) of rule 3745-21-01 of the Administrative Code.

(C) Overall requirements for reactors and distillation units.

(1) Except where exempted under paragraph (C)(2) of this rule, the owner or operator of a reactor or distillation unit subject to this rule shall comply with the requirements of paragraphs (D) to (L) of this rule.

(2) Exempted from the requirements of paragraph (C)(1) of this rule is any reactor or distillation unit in a process unit with a total design capacity for all chemicals produced within that unit of less than one thousand one hundred tons per year. However, such reactor or distillation unit remains subject to the recordkeeping and reporting requirements contained in paragraphs (J)(1)(f) and (L)(1) of this rule.

(D) Determination of group status and halogen status for process vents of reactors and distillation units.

(1) (Group status) The owner or operator of a reactor or distillation unit shall determine the group status (i.e., group 1, group 2A, or group 2B) for each process vent based on flow rate, VOC concentration, and TRE index value in accordance with paragraphs (D)(3) to (D)(5) of this rule and the procedures contained in paragraph (E) of this rule. Group 1 process vents require control for VOC, and group 2A and group 2B process vents do not. Group 1 process vents require monitoring of control devices, except for boilers or process heaters specified under paragraphs (F)(1)(b) and (F)(1)(c) of this rule, and require monitoring of bypass lines. Group 2A process vents require monitoring of the associated recovery systems, and group 2B process vents do not require any monitoring.

(2) (Halogen status) The owner or operator of a group 1 process vent which is controlled (or to be controlled) by a combustion device shall determine the halogen status in accordance with the procedures specified in paragraph (E)(7) of this rule. Group1 process vents that are halogenated process vents being discharged to a combustion device require halogen reduction control (either a pre-combustion or post-combustion).

(3) (Group 1) A process vent shall be group 1 if it meets at least one of the following specifications:

(a) The owner or operator designates the process vent as group 1.

(b) At representative operating conditions expected to yield the lowest TRE index value for the process vent, the TRE index value is less than or equal to 1.0, the flow rate is equal to or greater than 0.30 scfm, and the VOC concentration is equal to or greater than five hundred ppmv.

(4) (Group 2A) A process vent shall be group 2A if it is from a recovery system and if, at representative operating conditions expected to yield the lowest TRE index value for the process vent, the TRE index value is greater than 1.0 and less than or equal to 4.0, the flow rate is equal to or greater than 0.30 scfm, and the VOC concentration is equal to or greater than five hundred ppmv.

(5) (Group 2B) A process vent shall be group 2B if it meets any one of the following specifications.

(a) The process vent has a flow rate less than 0.30 scfm.

(b) The process vent has a VOC concentration less than five hundred ppmv.

(c) The process vent is not from a recovery system and, at representative operating conditions expected to yield the lowest TRE index value for the process vent, the TRE index value is greater than 1.0.

(d) The process vent is from a recovery system and, at representative operating conditions expected to yield the lowest TRE index value for the process vent, the TRE index value is greater than 4.0.

(6) Process changes for group 2A and group 2B process vents.

Whenever process changes are made that could reasonably be expected to change a group 2A or group 2B process vent to a group 1 process vent, the owner or operator shall redetermine the flow rate, VOC concentration, or TRE index value, according to paragraph (D)(6)(a), (D)(6)(b), or (D)(6)(c) of this rule as specified for each process vent as necessary to determine whether the process vent is group 1, group 2A, or group 2B. The owner or operator shall perform the group status determination as soon as practical after the process change and within sixty days after the process change. Examples of process changes include, but are not limited to, changes in production capacity, production rate, feedstock type, or catalyst type, or whenever there is replacement, removal, or addition of recovery equipment. For purposes of paragraph (D)(6) of this rule, process changes do not include process upsets, unintentional, temporary process changes, and changes that are within the range on which the original TRE index value calculation was based.

(a) (Group 2B process vent based on flow rate) The flow rate shall be redetermined by using the measurement procedure in paragraph (E)(9) of this rule or by using an engineering assessment of the effects of the change.

(b) (Group 2B process based on VOC concentration) The VOC concentration shall be redetermined by using the measurement procedure in paragraph (E)(10) of this rule or by using an engineering assessment of the effects of the change.

(c) (Group 2B process vent based on TRE index value or group 2A process vent) The TRE index value shall be redetermined (recalculated) based on measurements of flow rate, net heating value, VOC emission rate, and halogen status as specified in paragraphs (E)(9), (E)(11), (E)(12), and (E)(13) of this rule, or based on an engineering assessment of the effects of the change.

(E) Procedures for process vent determinations.

(1) (General) The provisions under paragraph (E) of this rule provide procedures for the determination of process vent parameters that are used to determine the group status and halogen status for a process vent.

(2) Location within a process vent for determination of group status and halogen status and for sampling.

(a) For the purpose of determining group status of a process vent based on VOC concentration, flow rate, or TRE index value, the location shall be representative of the process vent stream after the last recovery device (if any recovery devices are present) but prior to the inlet of any control device that is present, and prior to release to the atmosphere. The process vent parameters for TRE index value are flow rate, net heating value, VOC emission rate, and halogen status.

(b) The location of the sampling site for measurement of process vent parameters (flow rate, VOC concentration, VOC emission rate, net heating value, and mass emission rate for halogen atoms) shall be selected in accordance with paragraph (E)(2)(a) of this rule and paragraph (C)(3)(f) of rule 3745-21-10 of the Administrative Code. No traverse site selection method is needed for process vents smaller than four inches (0.10 meter) in nominal inside diameter.

(3) The flow rate of a process vent shall be determined by engineering assessment or by the measurement procedure of paragraph (E)(9) of this rule.

(4) The VOC concentration of a process vent shall be determined by engineering assessment or by the measurement procedure of paragraph (E)(10) of this rule.

(5) The net heating value of a process vent shall be determined by engineering assessment or by the measurement procedure of paragraph (E)(11) of this rule.

(6) The VOC and TOC emission rate of a process vent shall be determined by engineering assessment or by the measurement procedure of paragraph (E)(12) of this rule.

(7) The halogen status of a process vent shall be determined by process knowledge that no halogen or hydrogen halides are present in the process vent, by engineering assessment, or by the measurement procedure of paragraph (E)(13) of this rule. If the mass emission rate of halogen atoms for a process vent is equal to or greater than 0.99 pound per hour, the process vent shall be classified as halogenated.

(8) Procedure for TRE index value.

The TRE index value of the process vent shall be determined as specified in paragraphs (E)(8)(a) to (E)(8)(c) of this rule.

(a) TRE index value for a process vent shall be calculated by the following equation:

$$TRE = [a + b(Q) + c(H) + d(E_{TOC})] / E_{VOC}$$

where:

TRE = TRE index value.

Q = Process vent flow rate, standard cubic meters per minute, at a standard temperature of 20 degrees Celsius, as determined under paragraph (E)(3) of this rule by engineering assessment or measurement procedure.

H = Process vent net heating value, megajoules per standard cubic meter, as determined under paragraph (E)(5) of this rule by engineering assessment or measurement procedure.

E_{VOC} = Process vent emission rate of VOC, kilograms per hour, as determined under paragraph (E)(6) of this rule by engineering assessment or measurement procedure.

E_{TOC} = Process vent emission rate of TOC, kilograms per hour, as determined under paragraph (E)(6) of this rule by engineering assessment or measurement procedure.

a, b, c, and d = coefficients presented in table A of this rule.

Table A: Coefficients for Total Resource Effectiveness for Nonhalogenated and Halogenated Process Vent Streams

Type of Process Vent Stream	Control Device Basis	Values of Coefficients			
		a	b	c	d
Nonhalogenated	Flare	2.129	0.183	-0.005	0.359
	Thermal incinerator with zero percent heat recovery	3.075	0.021	-0.037	0.018
	Thermal incinerator with 70 percent heat Recovery	3.803	0.032	-0.042	0.007
Halogenated	Thermal incinerator and scrubber	5.470	0.181	-0.040	0.004

(b) For a nonhalogenated process vent stream, the owner or operator shall use the applicable coefficients in table A to calculate the TRE index values based on a flare, a thermal incinerator with zero heat recovery, and a thermal incinerator with seventy per cent heat recovery, and shall select the lowest TRE index value. For a halogenated process vent stream, the owner or operator shall use the applicable coefficients in table A to calculate the TRE index value based on a thermal incinerator and scrubber.

(c) If the TRE index value, as determined in accordance with paragraphs (E)(8)(a) and (E)(8)(b) of this rule, is less than or equal to 4.0, and such TRE index value is calculated using engineering assessment for process vent flow rate, process vent net heating value, process vent VOC emission rate, or process vent halogen status, then the owner or operator shall either perform the measurement procedures specified in paragraphs (E)(9), (E)(11), (E)(12), and (E)(13) of this rule for the determination of the process vent's group status or designate the process vent as a group 1 process vent.

(9) (Measurement procedure for flow rate) The process vent volumetric flow rate in standard cubic meters per minute shall be measured at a sampling site selected as specified in paragraph (E)(2)(b) of this rule and by the appropriate method specified in paragraph (C)(3)(f) of rule 3745-21-10 of the Administrative Code. If the process vent stream passes through a final steam jet ejector and is not condensed, the volumetric flow rate shall be corrected to 2.3 per cent moisture.

(10) Measurement procedure for VOC concentration.

(a) The sampling site shall be selected as specified in paragraph (E)(2)(b) of this rule.

(b) The methods and procedures under paragraph (C) of rule 3745-21-10 of the Administrative Code shall to be employed wherein USEPA method 18 or USEPA method 25A shall be employed for VOC concentration.

(c) If USEPA method 18 is employed, the following procedures shall be used:

(i) The minimum sampling time for each run shall be one hour in which either an integrated sample or four grab samples shall be taken. If grab sampling is used, then the samples shall be taken at approximately equal intervals in time, such as fifteen-minute intervals during the run.

(ii) The VOC concentration (C) is the sum of the concentrations of the individual components and shall be computed for each run by the following equation:

$$C = \sum_{i=1}^{x} \frac{\left(\sum_{j=1}^{n} C_{ji}\right)}{x}$$

where:

C = Concentration of VOC, dry basis, ppmv.

x = Number of samples in the sample run.

n = Number of components in the sample.

C_{ji} = Concentration of sample component j of the sample i, dry basis, ppmv.

(d) If USEPA method 25A is employed, the following procedures shall be used:

(i) USEPA method 25A shall be used only if a single organic compound of VOC is greater than fifty per cent of the total VOC, by volume, in the process vent.

(ii) The process vent composition may be determined by either process knowledge or test data collected using an appropriate USEPA method. Examples of information that could constitute process knowledge include calculations based on material balances, process stoichiometry, or previous test results provided the results are still relevant to the current process vent conditions.

(iii) The organic compound used as the calibration gas for USEPA method 25A shall be the single organic compound of VOC present at greater than fifty per cent of the total VOC by volume.

(iv) The span value for USEPA method 25A shall be equal to five hundred ppmv.

(v) Use of USEPA method 25A is acceptable if the response from the high-level calibration gas is at least twenty times the standard deviation of the response from the zero calibration gas when the instrument is zeroed on the most sensitive scale.

(vi) The owner or operator shall demonstrate that the total organic concentration measured by USEPA method 25A is below two hundred fifty ppmv in order for the VOC concentration to be considered below five hundred ppmv.

(11) (Measurement procedure for net heating value) The net heating value of a vent stream shall be measured and calculated in accordance with 40 CFR 63.115(d)(2)(ii) and 40 CFR 63.115(d)(2)(iii).

(12) (Measurement procedure for TOC and VOC emission rates) The TOC and VOC emission rates of a process vent shall be determined in accordance with paragraph (C) of rule 3745-21-10 of the Administrative Code and the following:

(a) The sampling site shall be selected as specified in paragraph (E)(2)(b) of this rule.

(b) The minimum sampling time for each run shall be one hour in which either an integrated sample or a minimum of four grab samples shall be taken. If grab sampling is used, then the samples shall be taken at approximately equal intervals in time such as fifteen-minute intervals during the run.

(c) The mass rates of TOC and VOC for each sample shall be calculated in accordance with paragraph (C)(4) of rule 3745-21-10 of the Administrative Code wherein all organic compounds measured by USEPA method 18 are used in the calculation of the mass rate of TOC and only those organic compounds that are VOC are used in the calculation of mass rate of VOC. The mass rates of TOC and VOC for each run shall be the average of the mass rates of TOC and VOC of each sample within that run.

(13) (Measurement procedure for mass emission rate of halogen atoms) The mass emission rate of halogen atoms for a process vent shall be measured based upon a sampling site selected as specified in paragraph (E)(2)(b) of this rule, flow rate measured by the appropriate method specified in paragraph (C)(3)(f) of rule 3745-21-10 of the Administrative Code, and the halogen-related measurements

and calculations specified in 40 CFR 63.115(d)(2)(v)(A)(3) and 40 CFR 63.115(d)(2)(v)(B).

(F) Control and operational requirements for process vents.

(1) For any group 1 process vent, the owner or operator shall comply with the requirements of paragraph (F)(1)(a), (F)(1)(b), (F)(1)(c), (F)(1)(d), (F)(1)(e), (F)(1)(f), or (F)(1)(h) of this rule. If the group 1 process vent is a halogenated process vent that is discharged to a combustion device, the owner or operator shall also comply with the requirements of paragraph (F)(1)(g) of this rule.

(a) Discharge the group 1 process vent to a flare that is designed and operated to meet the requirements specified under paragraph (DD)(10)(d) of rule 3745-21-09 of the Administrative Code.

(b) Discharge the group 1 process vent into the flame zone of a boiler or process heater with a heat input capacity equal to or grater than one hundred fifty million Btu per hour.

(c) Discharge the group 1 process vent to a boiler or process heater as the primary fuel or with the primary fuel.

(d) Discharge the group 1 process vent to a control device (boiler, process heater, incinerator or recapture device) or combination of control devices that is designed and operated to reduce VOC emissions from the group 1 process vent by at least ninety-eight per cent or emit VOC at a concentration less than twenty ppmv, dry basis, whichever is less stringent. For a combustion device, the concentration of VOC shall be corrected to three per cent oxygen.

(e) For the group 1 process vent, achieve and maintain a TRE index value greater than 1.0 at the outlet of the final recovery device, or prior to release from the process vent to atmosphere if no recovery device is present. If the TRE index value is greater than 1.0, the process vent shall meet the requirements for a group 2A or group 2B process vent specified in paragraph (F)(2) or (F)(3) of this rule, whichever is applicable.

(f) (Existing combustion device) Discharge the group 1 process vent to a previously installed combustion device, provided all of the following conditions are met:

(i) The combustion device was installed:

(a) Prior to May 27, 2005 if the facility is located in Butler, Clermont, Hamilton, or Warren county; or

(b) Prior to the effective date of this rule if the facility is located in Ashtabula, Cuyahoga, Geauga, Lake, Lorain, Medina, Portage, or Summit county.

(ii) The combustion device is not capable of reliably reducing VOC emissions from the process vent in order to meet the requirement of paragraph (F)(1)(d) of this rule.

(iii) The combustion control shall reduce VOC emissions from the group 1 process vent by at least ninety per cent by weight.

(iv) If the combustion device is replaced with new control equipment for which construction commenced on or after the effective date of this rule, the use of paragraph (F)(1)(f) of this rule shall terminate for the group 1 process vent.

(g) A group 1 process vent that is a halogenated process vent and that is discharged to a combustion device shall be controlled with a halogen reduction device that meets paragraph (F)(1)(g)(i) or (F)(1)(g)(ii) of this rule. However, if the combustion device is a flare, the group 1 process vent shall be controlled with a halogen reduction device that meets paragraph (F)(1)(g)(ii) of this rule.

(i) (Halogen reduction device following combustion) A scrubber or other halogen reduction device that follows combustion shall meet the requirement of paragraph (F)(1)(g)(i)(a) or (F)(1)(g)(i)(b) of this rule, as applicable.

(a) Except as provided in paragraph (F)(1)(g)(i)(b) of this rule, the scrubber or other halogen reduction device shall reduce overall emissions of hydrogen halides and halogens by ninety-nine per cent or shall reduce the outlet mass of total hydrogen halides and halogens to less than 0.99 pound per hour, whichever is less stringent.

(b) If a scrubber or other halogen reduction device was installed prior to the effective date of this rule, it shall reduce overall emissions of hydrogen halides and halogens by ninety-five per cent or shall reduce the outlet mass of total hydrogen halides and halogens to less than 0.99 pound per hour, whichever is less stringent.

(ii) (Halogen reduction device prior to combustion) A halogen reduction device, such as a scrubber, or other technique shall reduce the process vent's mass emission rate of halogen atoms to less than 0.99 pound per hour prior to the combustion device.

(h) (Off-site control or onsite control not owned or operated by the owner or operator of the source) Transfer the gas stream from group 1 process vent for disposal to an onsite control device (or other compliance equipment) not owned or operated by the owner or operator of the source (reactor or distillation unit) generating the gas stream, or to an off-site control device or other compliance equipment, provided the following conditions are met:

(i) The owner or operator transferring the gas stream shall:

(a) Comply with the provisions specified in paragraph (H)(6) of this rule for each gas stream prior to transfer.

(b) Notify the transferee that the gas stream contains VOC that are to be treated in accordance with the provisions of this rule. The notice shall be submitted to the transferee initially and whenever there is a change in the required control.

(ii) The owner or operator may not transfer the gas stream unless the transferee has submitted to the director a written certification that the transferee will manage and treat any gas stream transferred under paragraph (F)(1)(h) of this rule and received from a source (reactor or distillation unit) subject to this rule in accordance with the requirements of this rule. The certifying entity may revoke the written certification by sending a written statement to the director and the owner or operator giving at least ninety days notice that the certifying entity is rescinding acceptance of responsibility for compliance with the regulatory provisions of this rule. Upon expiration of the notice period, the owner or operator may not transfer the gas stream to the transferee. Records retained by the transferee shall be retained in accordance with paragraph (J)(1) of this rule.

(iii) By providing this written certification to the director, the certifying entity accepts responsibility for compliance with the regulatory provisions listed in paragraph (F)(1)(h)(ii) of this rule with respect to any transfer covered by the written certification. Failure to abide by any of those provisions with respect to such transfers may result in enforcement action by the director against the certifying entity.

(iv) Written certifications and revocation statements to the director from the transferees of such gas streams shall be signed by a responsible official of the certifying entity and provide the name and address of the certifying entity. Such written certifications are not transferable by the transferee.

(2) For any group 2A process vent, the owner or operator shall maintain a TRE index value greater than 1.0

(3) For any group 2B process vent, the owner or operator shall maintain a flow rate less than 0.30 scfm, or a VOC concentration less than five hundred ppmv, or a TRE index value greater than 1.0 if the gas stream is not from a recovery system, or a TRE index value greater than 4.0 if the gas stream is from a recovery system, whichever is the basis for the group 2B status for that process vent.

(G) Compliance dates.

(1) Except where otherwise specified within this rule, any owner or operator of a reactor or distillation unit that is subject to this rule shall comply with the requirements of this rule by no later than the following dates:

(a) For any reactor or distillation unit located in Butler, Clermont, Hamilton, or Warren county for which installation commenced before May 27, 2005, the compliance date of the reactor or distillation unit is May 27, 2006.

(b) For any reactor or distillation unit located in Butler, Clermont, Hamilton, or Warren county for which installation commenced on or after May 27, 2005, the compliance date of the reactor or distillation unit is the date of initial startup of the reactor or distillation unit.

(c) For any reactor or distillation unit located in Ashtabula, Cuyahoga, Geauga, Lake, Lorain, Medina, Portage, or Summit county for which installation commenced before the effective date of this rule, the compliance date of the reactor or distillation unit is twelve months from the effective date of this rule.

(d) For any reactor or distillation unit located in Ashtabula, Cuyahoga, Geauga, Lake, Lorain, Medina, Portage, or Summit county for which installation commenced on or after the effective date of this rule, the compliance date of the reactor or distillation unit is the date of initial startup of the reactor or distillation unit.

(2) In the event a reactor or distillation unit has a group 1 process vent which is subject to paragraph (F)(1)(f) of this rule and the group 1 process vent is later discharged to a new control device, the compliance date of the process vent pertaining to an applicable requirement under paragraph (F)(1) of this rule is the date of first startup of the discharge of the process vent to the new control device. Until that date of first startup, the group 1 process vent shall continue to comply with paragraph (F)(1)(f) of this rule.

(3) If there is a change in group status due to a process change, the owner or operator shall meet the requirements of paragraphs (G)(3)(a), (G)(3)(b), and (G)(3)(c) of this rule, whichever is applicable.

(a) (Group status change to group 1) Where the process change causes the group status to change to group 1, the owner or operator shall comply with the group 1 process vent requirements in paragraph (F)(1) of this rule upon initial startup after the change and thereafter unless the owner or operator demonstrates to the director that achieving compliance will take longer than making the process change. If this demonstration is made to the director's satisfaction, the owner or operator shall comply as expeditiously as practical, but in no event later than one year after the process vent becomes a group 1 process vent, and shall comply with the following procedures to establish a compliance date:

(i) The owner or operator shall submit to the director for approval a compliance schedule, along with a justification for the schedule.

(ii) The compliance schedule shall be submitted with an application for a permit, or an application for a modification of a permit, or by other means provided by the appropriate Ohio environmental protection agency district office or local air agency.

(iii) The director shall approve the compliance schedule or request changes within ninety calendar days of receipt of the compliance schedule and justification for the schedule.

(b) (Group status change to group 2A) Where the process change causes the process vent group status to change to group 2A, the owner or operator shall comply with the requirements of paragraph (F)(2) of this rule upon completion of the group status determination of the process vent.

(c) (Group status change to group 2B) Where the process change causes the process vent group status to change to group 2B or causes the basis of a group 2B status to change, the owner or operator shall comply with the requirements of paragraph (F)(3) of this rule as soon as practical after the process change.

(4) The owner or operator of any reactor or distillation unit that has a group 1 process vent discharged to a flare that is designed and operated to meet paragraph (F)(1)(a) of this rule, or discharged to a control device or combination of control devices that is designed and operated to meet paragraph (F)(1)(d) of this rule shall demonstrate compliance by conducting a compliance test of the control and/or recovery devices in accordance with paragraph (I) of this rule within ninety days after the compliance date.

(5) The owner or operator of any reactor or distillation unit that has a group 1 process vent operated to meet paragraph (F)(1)(e) of this rule or a group 2A process vent operated to meet paragraph (F)(2) of this rule shall demonstrate

compliance by conducting a TRE determination test in accordance with paragraph (I) of this rule by the compliance date.

(6) Additional testing of the process vent, control device, or recovery device of a reactor or distillation unit in accordance with paragraph (I) of this rule may be required by the director to ensure continued compliance.

(H) Monitoring requirements for group 1 and group 2A process vents.

(1) For any flare used by a group 1 process vent to comply with paragraph (F)(1)(a) of this rule, the owner or operator shall install, calibrate, maintain, and operate according to manufacturer's specifications, a monitoring device (including but not limited to a thermocouple, ultra-violet beam sensor, or infrared sensor) capable of continuously detecting the presence of a flame.

(2) For any combustion device (boiler, process heater, incinerator) used by a group 1 process vent to comply with paragraph (F)(1)(d) or (F)(1)(g) of this rule, the owner or operator shall install, calibrate, maintain, and operate according to manufacturer's specifications, a temperature monitoring device equipped with a continuous recorder. The temperature monitoring device shall be located as follows:

(a) Where a thermal incinerator is used, the temperature monitoring device shall be located in the firebox or in the ductwork immediately downstream of the firebox in a position before any substantial heat exchange occurs.

(b) Where a catalytic incinerator is used, temperature monitoring devices shall be located in the gas stream immediately before and after the catalyst bed.

(c) Where a boiler or process heater is used, the temperature monitoring device shall be located in the firebox. This requirement does not apply to process vent streams that are introduced with the primary fuel or are used as the primary fuel.

(3) For any recapture device used by a group 1 process vent to comply with paragraph (F)(1)(d) of this rule and for any final recovery device within a recovery system used by a group 2A process vent to comply with paragraph (F)(2) of this rule the owner or operator shall install, calibrate, maintain and operate according to manufacturer's specifications, the following monitoring devices:

(a) Where an absorber is used,

(i) A temperature monitoring device equipped with a continuous recorder shall be employed to monitor the exit temperature of the absorbing liquid; and

(ii) A specific gravity monitoring device equipped with a continuous recorder shall be employed to monitor the exit specific gravity of the absorbing liquid.

(b) Where a condenser is used, a temperature monitoring device equipped with a continuous recorder shall be employed to monitor the exit (product side) temperature.

(c) Where a carbon adsorber is used,

(i) An integrating regeneration stream flow monitoring device, having an accuracy of plus or minus ten per cent or better, shall be employed for recording the total regeneration stream mass or volumetric flow for each regeneration cycle; and

(ii) A carbon bed temperature monitoring device shall be employed for recording the carbon bed temperature after each regeneration and within fifteen minutes of completing any cooling cycle.

(d) Where a recapture or final recovery device other than an absorber, condenser, or carbon adsorber is used, or as an alternative to the monitoring device specified in paragraphs (H)(2)(a) to (H)(2)(c) of this rule, an organic monitoring device equipped with a continuous recorder shall be employed for monitoring the concentration level or reading at the outlet of the recapture or final recovery device.

(4) For any halogen reduction device used by a halogenated group 1 process vent to comply with paragraph (F)(1)(g) of this rule, the owner or operator shall install, calibrate, maintain and operate according to manufacturer's specifications, monitoring devices as specified in paragraph (H)(4)(a) or (H)(4)(b) of this rule.

(a) Where a scrubber is used, the following monitoring devices shall be employed:

(i) A pH monitoring device equipped with a continuous recorder shall be employed to monitor the pH of the scrubber effluent.

(ii) A flow meter equipped with a continuous recorder shall be employed to monitor the scrubber influent for liquid flow.

(iii) A flow meter equipped with a continuous recorder shall be employed to monitor the gas stream flow, unless an alternative method for gas stream flow as specified in paragraphs (H)(4)(a)(iii)(a) to (H)(4)(a)(iii)(c) is submitted to the director.

(a) The owner or operator may determine gas stream flow using the design blower capacity, with appropriate adjustments for pressure drop.

(b) If the scrubber is subject to an Ohio environmental protection agency or USEPA regulation prior to May 27, 2005 if the facility is located in Butler, Clermont, Hamilton, or Warren county, or the effective date of this rule if the facility is located in Ashtabula, Cuyahoga, Geauga, Lake, Lorain, Medina, Portage, or Summit county, the owner or operator may determine gas stream flow by the method that had been utilized to comply with such regulation. A determination that was conducted prior to the compliance date of such regulation may be utilized to comply with this rule if it is still representative.

(c) The owner or operator may prepare and implement a gas stream flow determination plan that documents an appropriate method that will be used to determine the gas stream flow. The plan shall require determination of gas stream flow by a method that will at least provide a value for either a representative or the highest gas stream flow anticipated in the scrubber during representative operating conditions other than startups, shutdowns, or malfunctions. The plan shall include a description of the methodology to be followed and an explanation of how the selected methodology will reliably determine the gas stream flow and a description of the records that will be maintained to document the determination of gas stream flow.

(b) Where a halogen reduction device other than a scrubber is used, the procedures in paragraph (H)(8) of this rule shall be followed to establish monitoring devices and parameters.

(5) (Alternative parameter monitoring) An owner or operator of a process vent may request approval to employ monitoring devices and monitoring parameters other than those listed in paragraphs (H)(1) to (H)(4) of this rule. The request shall be submitted according to the procedures specified in paragraph (H)(8) of this rule. Approval shall be requested if the owner or operator uses a combustion, recovery, or recapture device other than those listed in paragraphs (H)(1) to (H)(4) of this rule or uses one of the combustion or recovery or recapture devices listed in paragraphs (H)(1) to (H)(4) of this rule, but seeks to monitor a parameter other than those specified in paragraphs (H)(1) to (H)(4) of this rule.

(6) For any bypass line that could divert a group 1 process vent directly to the atmosphere, the owner or operator shall comply with paragraph (H)(6)(a) or (H)(6)(b) of this rule. Equipment such as low leg drains, high point bleeds,

analyzer vents, open-ended valves or lines, and pressure relief valves needed for safety purposes are not subject to this paragraph.

(a) The owner or operator shall install, calibrate, maintain, and operate, according to manufacturer's specifications, a flow indicator that takes a reading at least once every fifteen minutes. The flow indicator shall be installed at the entrance to any bypass line that could divert the gas stream to the atmosphere.

(b) The owner or operator shall secure the bypass line valve in the non-diverting position with a car-seal or a lock-and-key type configuration. The owner or operator shall perform a visual inspection of the seal or closure mechanism at least once every month to ensure that the valve is maintained in the non-diverting position and the gas stream is not diverted through the bypass line.

(7) For each parameter monitored under paragraphs (H)(2) to (H)(5) of this rule, the owner or operator shall determine a range that indicates proper operation of the control or recovery device. The ranges shall be determined in accordance with paragraphs (H)(7)(a) to (H)(7)(c) of this rule. In order to establish the range, the information specified under paragraph (K)(2)(c) of this rule shall be submitted as part of the initial compliance status report required under paragraph (K)(2) of this rule.

(a) If a compliance test is conducted pursuant to paragraph (I) of this rule, the range shall be based on the parameter values measured during the compliance test that demonstrated compliance and may be supplemented by engineering assessments and/or manufacturer's recommendations. Compliance testing is not required to be conducted over the entire range of permitted parameter values.

(b) If a TRE determination test is conducted pursuant to paragraph (I) of this rule, the range shall be based on the parameter values measured during the TRE determination test and may be supplemented by engineering assessments and/or manufacturer's recommendations. TRE determination testing or vent stream measurements are not required to be conducted over the entire range of permitted parameter values.

(c) If a compliance test or a TRE determination test has not been conducted, the range may be based solely on engineering assessments and/or manufacturer's recommendations.

(8) Approval of other monitoring devices and parameters.

(a) The owner or operator who has been directed by any paragraph of this rule to establish monitoring devices and parameters or request approval to employ monitoring devices and parameters other than required by this rule shall

submit within an application for a permit or modification of a permit, or by other means provided by the appropriate Ohio environmental protection agency or local air agency, the following information:

(i) A description of the parameter(s) to be monitored to ensure the process, control technology, or pollution prevention measure is operated in conformance with its design and achieves the specified emission limit, percent reduction, or nominal efficiency, and an explanation of the criteria used to select the parameter(s).

(ii) A description of the methods and procedures that will be used to demonstrate that the parameter indicates proper operation of the control device or recovery device being monitored, the schedule for this demonstration, and a statement that the owner or operator will establish a range for the monitored parameter as part of the initial compliance status report required in paragraph (K)(2) of this rule.

(iii) The frequency and content of monitoring, recording, and reporting if monitoring and recording is not continuous, or if reports of daily average values when the monitored parameter value is outside the range established in the operating permit or initial compliance report will not be included in semiannual reports as specified in paragraph (K)(2) of this rule. The rationale for the proposed monitoring, recording, and reporting system shall be included.

(b) If the monitoring device and parameter are approved by the director, the monitoring device and parameter, including associated records and semiannual reporting, shall be specified in the terms and conditions of a permit or order issued by the director.

(I) Compliance tests and TRE determination tests for group 1 and group 2A process vents.

(1) Where a flare is used to comply with paragraph (F)(1)(a) of this rule, the owner or operator shall conduct compliance tests as follows:

(a) Determine visible emissions from the flare in accordance with paragraph (DD)(10)(d)(i) of rule 3745-21-09 of the Administrative Code.

(b) Determine the net heating value of the gas being combusted in accordance with paragraph (P)(2) of rule 3745-21-10 of the Administrative Code.

(c) Determine the actual exit velocity of the flare in accordance with paragraph (P)(3) of rule 3745-21-10 of the Administrative Code

(2) No initial compliance test is required for a boiler or process heater used to comply with paragraph (F)(1)(b) or (F)(1)(c) of this rule.

(3) Except as provided in paragraph (I)(8) of this rule, any owner or operator using a control device (or combination of control devices) to comply with the VOC reduction or VOC concentration requirement in paragraph (F)(1)(d) of this rule or the VOC reduction requirement in paragraph (F)(1(f) of this rule, shall conduct an initial compliance test as follows:

(a) For determination of compliance with the ninety or ninety-eight per cent reduction of VOC requirement, sampling sites shall be located at the outlet to atmosphere of any control device and at the inlet of the control device (or combination of control devices) as follows:

(i) The control device inlet sampling site shall be located after the final recovery device (if any).

(ii) If a vent stream is introduced with the combustion air or as a secondary fuel into a boiler or process heater with a design capacity less than one hundred fifty million Btu per hour, selection of the location of the inlet sampling sites shall ensure the measurement of VOC concentrations in all vent streams and primary and secondary fuels introduced into the boiler or process heater.

(b) For determination of compliance with the twenty ppmv VOC limit, the sampling site shall be located at the outlet of any control device.

(c) The VOC concentration and mass rate of VOC for each sampling site shall be determined in accordance with the test methods in paragraph (C) of rule 3745-21-09 of the Administrative Code as follows:

(i) VOC concentration shall be based on USEPA method 18.

(ii) The minimum sampling time for each run shall be one hour in which either an integrated sample or a minimum of four grab samples shall be taken. If grab sampling is used, then the samples shall be taken at approximately equal intervals in time such as fifteen minute intervals during the run.

(iii) The mass rate of VOC for each sample shall be calculated in accordance with paragraph (C)(4) of rule 3745-21-10 of the Administrative Code. The mass rate of VOC for each run shall be the average of the mass rate of VOC of each sample within that run.

(d) The per cent reduction of VOC shall be the per cent reduction in the mass rate of VOC between the outlet of the last recovery device and the outlet to atmosphere from all control devices combined.

(e) If a combustion device is the control device used to comply with the twenty ppmv VOC limit, the concentration of VOC shall be corrected to three per cent oxygen for each run as follows:

(i) The emission rate correction factor or excess air, integrated sampling and analysis procedures of USEPA method 3B shall be used to determine the oxygen concentration ($\%O_{2d}$). The samples shall be taken during the same time that the VOC samples are taken.

(ii) The concentration corrected to three per cent oxygen (Cc) shall be computed using the following equation:

$$C_c = C_m (17.9)/(20.9 - \%0_{2d})$$

where:

C_c = Concentration of VOC corrected to three per cent oxygen, dry basis, ppmv.

C_m = Concentration of VOC measured, dry basis, ppmv.

$\%0_{2d}$ = Concentration of oxygen, dry basis, per cent by volume.

(4) Any owner or operator using a combustion device followed by a scrubber or other halogen reduction device to comply with paragraph (F)(1)(g)(i) of this rule shall conduct an initial compliance test to determine compliance with the per cent reduction (control efficiency) requirement or outlet mass limit for total hydrogen halides and halogens as follows:

(a) For determining compliance with the percent reduction requirement, sampling sites shall be located at the inlet and outlet of the scrubber or other halogen reduction device used to reduce halogen emissions.

(b) For determining compliance with outlet mass emission limit, the sampling site shall be located at the outlet of the scrubber or other halogen reduction device and prior to any releases to the atmosphere.

(c) Except as provided in paragraph (I)(4)(f) of this rule, USEPA method 26 or USEPA method 26A shall be used to determine the concentration, in milligrams per dry standard cubic meter, of total hydrogen halides and halogens that may be present in the gas stream at each sampling site. The

mass emissions of each hydrogen halide and halogen compound shall be calculated from the measured concentrations and the gas stream flow rate.

(d) To demonstrate compliance with the per cent reduction requirement:

(i) The mass emissions for any hydrogen halides and halogens present at the inlet of the scrubber or other halogen reduction device shall be summed together

(ii) The mass emissions for any hydrogen halides and halogens present at the outlet of the scrubber or other halogen reduction device shall be summed together.

(iii) The per cent reduction shall be determined by comparison of the summed inlet and outlet measurements.

(e) To demonstrate compliance with the outlet mass emission limit:

(i) The mass emissions for any hydrogen halides and halogens at the outlet of the scrubber or other halogen reduction device shall be summed together and expressed as a mass emission rate in pounds per hour.

(ii) The resultant mass emission rate of total hydrogen halides and halogens must be less than 0.99 pound per hour.

(f) The owner or operator may use any other method to demonstrate compliance if the method or data has been validated according to the applicable procedures of USEPA method 301.

(5) An owner or operator using a scrubber or other halogen reduction device to reduce the vent stream halogen atom mass emission rate to less than 0.99 pound per hour prior to a combustion device to comply with paragraph (F)(1)(g)(ii) of this rule shall determine the halogen atom mass emission rate prior to the combustion device according to the measurement procedure in paragraph (E)(13) of this rule.

(6) Except as provided in paragraph (I)(9) of this rule, any owner or operator using a recovery system, process change, or other means to achieve and maintain a TRE index value greater than 1.0 for a process vent and to comply with paragraph (F)(1)(e) of this rule, shall conduct TRE determination tests to determine the TRE index value of the process vent based on measurements for flow rate, net heating value, VOC emission rate, and mass emission rate of halogen atoms (if needed for halogen status) as specified in the measurement procedures of paragraphs (E)(9), (E)(11), (E)(12), and (E)(13) of this rule.

(7) Except as provided in paragraph (I)(9) of this rule, any owner or operator using a recovery system to maintain a TRE index value greater than 1.0 for a process vent and comply with paragraph (F)(2) of this rule, shall conduct TRE determination tests to determine the TRE index value of the process vent based on measurements conducted for flow rate, net heating value, VOC emission rate, and mass emission rate of halogen atoms (if needed for halogen status) as specified in the measurement procedures of paragraphs (E)(9), (E)(11), (E)(12), and (E)(13) of this rule.

(8) An initial compliance test is not required for the following:

(a) A control device for which a test was conducted for determining compliance with a regulation promulgated by the Ohio EPA or USEPA and the test was conducted using the same methods specified in this rule and either no process changes have been made since the test, or the owner or operator can demonstrate to the satisfaction of the director that the results of the test, with or without adjustments, reliably demonstrate compliance despite process changes.

(b) A boiler or process heater burning hazardous waste for which the owner or operator:

(i) Has been issued a final permit under 40 CFR part 270 and complies with the requirements of 40 CFR part 266, subpart H;.

(ii) Has certified compliance with the interim status requirements of 40 CFR Part 266, subpart H; or

(c) A hazardous waste incinerator for which the owner or operator has been issued a final permit under 40 CFR part 270 and complies with the requirements of 40 CFR part 264, subpart O, or has certified compliance with the interim status requirements of 40 CFR part 265, subpart O.

(9) An initial TRE determination test is not required for a recovery device for which a test was conducted for determining compliance with a regulation promulgated by the Ohio EPA or USEPA and the test was conducted using the same methods specified in this rule and either no process changes have been made since the test, or the owner or operator can demonstrate to the satisfaction of the director that the results of the test, with or without adjustments, reliably demonstrate compliance despite process changes.

(J) Recordkeeping.

(1) (General) All records specified under this paragraph shall be retained by the owner or operator for a period of not less than five years and shall be made available to the director or any authorized representative of the director for

review during normal business hours. The following types of records are to be maintained by the owner or operator:

(a) Group status determination records for process vents.

(b) Monitoring records for group 1 and group 2A process vents.

(c) Compliance demonstration records for group 1 process vents.

(d) Compliance demonstration records for group 2A process vents.

(e) Compliance demonstration records for group 2B process vents.

(f) Records pertaining to the one thousand one hundred tons per year exemption.

(2) Group status determination records for process vents.

The owner or operator of a reactor or distillation unit subject to this rule shall maintain records used to determine the group status of each process vent. The following types of records are to be maintained:

(a) (TRE index value records) The owner or operator shall maintain records of measurements, engineering assessments, and calculations performed to determine the TRE index value of the process vent according to the procedures of paragraph (E)(8) of this rule, including those records associated with halogen vent stream determination. Documentation of engineering assessments shall include all data, assumptions, and procedures used for the engineering assessments. For any process vent not classified as group 2B based on flow rate or VOC concentration records specified in paragraphs (J)(2)(b) and (J)(2)(c) of this rule, TRE index value records are needed to document the basis for classifying a process vent as group 1, group 2A, or group 2B.

(b) (Flow rate records) Each owner or operator who elects to demonstrate that a process vent is group 2B based on a flow rate less than 0.30 scfm shall record the flow rate as measured using the measurement procedure specified in paragraph (E)(9) of this rule or as determined through engineering assessment.

(c) (VOC concentration records) Each owner or operator who elects to demonstrate that a process vent is group 2B based on a VOC concentration less than the five hundred ppmv shall record the VOC concentration as measured using the measurement procedure specified in paragraphs (E)(10) of this rule or as determined through engineering assessment.

(d) (Process change records) The owner or operator shall keep up-to-date, readily accessible records on process changes, as defined in paragraph (D)(6) of this rule, for process vents as follows:

(i) If the process vent is a group 2B process vent on the basis of the flow rate being less than 0.30 scfm, then the owner or operator shall keep records of any process changes that increase the process vent flow rate and any redetermination of the flow rate pursuant to paragraph (D)(6)(a) of this rule.

(ii) If the process vent is a group 2B process vent on the basis of the VOC concentration being less than five hundred ppmv, then the owner or operator shall keep records of any process changes that increase the VOC concentration of the process vent and any redetermination of the concentration pursuant to paragraph (D)(6)(b) of this rule.

(iii) If the process vent is a group 2B process vent on the basis of the TRE index value being greater than 4.0 for a vent stream from a recovery system, then the owner or operator shall keep records of any process changes and any redetermination (recalculation) of the TRE index value pursuant to paragraph (D)(6)(c) of this rule.

(iv) If the process vent is a group 2B process vent on the basis of the TRE index value being greater than 1.0 for a vent stream not from a recovery system, then the owner or operator shall keep records of any process changes and any redetermination (recalculation) of the TRE index value pursuant to paragraph (D)(6)(c) of this rule.

(v) If the process vent is a group 2A process vent (i.e., the TRE index value is greater than 1.0 and less than or equal to 4.0 for a vent stream not from a recovery system), then the owner or operator shall keep records of any process changes and any redetermination (recalculation) of the TRE index value pursuant to paragraph (D)(6)(c) of this rule.

(3) Monitoring records for group 1 and group 2A process vents.

For any group 1 or group 2A process vent subject to paragraph (H) of this rule, the owner or operator shall maintain monitoring records as follows:

(a) For any flare used by a group 1 process vent to comply with paragraph (F)(1)(a) of this rule, the owner or operator shall maintain the following records for the monitoring device used to continuously detect the presence of a pilot flame.

(i) Hourly records of whether the monitor was continuously operating and whether a pilot flame was continuously present during each hour.

(ii) A record on the presence of a pilot flame over the full period of the compliance test.

(iii) A record of the times and duration of all periods when the pilot flame is absent or the monitoring device is not operating.

(b) For any combustion device (boiler, process heater, or incinerator) used by a group 1 process vent to comply with paragraph (F)(1)(d) or (F)(1)(f) of this rule, the owner or operator shall maintain the following records for the temperature monitoring device:

(i) Where the combustion device is a thermal incinerator, boiler, or process heater:

(a) Continuous records of firebox temperature.

(b) A record of the firebox temperature averaged over the full period of the compliance test.

(c) A record of daily average firebox temperature for each operating day.

(d) Records of the times and durations of all periods excluded from the daily average as specified in paragraph (J)(3)(f) of this rule and any other periods during process or control operation when the monitoring device is not working.

(ii) Where the combustion device is a catalytic incinerator:

(a) Continuous records of temperature upstream and downstream of catalyst bed.

(b) A record of the upstream temperature, downstream temperature, and temperature difference across the catalyst bed averaged over the full period of the compliance test.

(c) A record of the daily average of the upstream temperature and the temperature difference across the catalyst bed for each operating day.

(d) Records of the times and durations of all periods excluded from the daily average as specified in paragraph (J)(3)(f) of this rule and any other periods during process or control operation when the monitoring device is not working.

(c) For any halogen reduction device used by a halogenated group 1 process vent to comply with paragraph (F)(1)(g)(i) of this rule, the owner or operator shall maintain the following monitoring records:

(i) Where a scrubber is employed for a halogenated vent stream following combustion:

(a) Continuous records of pH of scrubber effluent.

(b) A record of pH of the scrubber effluent averaged over the full period of the compliance test.

(c) A record of the daily average pH of the scrubber effluent for each operating day.

(d) Continuous records of scrubber liquid flow rate.

(e) A record of the scrubber liquid/gas ratio averaged over the full period of the compliance test.

(f) A record of the daily average scrubber liquid/gas ratio for each operating day.

(g) Records of the times and durations of all periods excluded from the daily average as specified in paragraph (J)(3)(f) of this rule and any other periods during process or control operation when either monitoring device is not working.

(ii) Where a halogen reduction device other than a scrubber is employed for a halogenated vent stream following combustion, the owner or operator shall maintain the monitoring records identified pursuant to paragraph (H)(8) of this rule.

(d) For any recapture device used by a group 1 process vent to comply with paragraph (F)(1)(d) of this rule and any final recovery device within a recovery system used by a group 2A process vent to comply with paragraph (F)(2) of this rule, the owner or operator shall maintain the following monitoring records, as applicable:

(i) Where an absorber is the recapture or final recovery device:

(a) Continuous records of the exit temperature of the absorbing liquid.

(b) A record of the exit temperature of the absorbing liquid averaged over the full period of the compliance test (if group 1) or averaged

over the full period of the TRE index value determination (if group 2A).

(c) A record of the daily average exit temperature of the absorbing liquid for each operating day.

(d) Continuous records of the exit specific gravity.

(e) A record of the exit specific gravity averaged over the full period of the compliance test (if group 1) or averaged over the full period of the TRE index value determination (if group 2A).

(f) A record of the daily average exit specific gravity for each operating day.

(g) Records of the times and durations of all periods excluded from the daily average as specified in paragraph (J)(3)(f) of this rule and any other periods during process or control operation when either monitoring device is not working.

(ii) Where a condenser is the recapture device or final recovery device:

(a) Continuous records of the exit (product side) temperature.

(b) A record of the exit temperature averaged over the full period of the compliance test (if group 1) or averaged over the full period of the TRE index value determination (if group 2A).

(c) A record of the daily average exit temperature for each operating day.

(d) Records of the times and durations of all periods excluded from the daily average as specified in paragraph (J)(3)(f) of this rule and any other periods during process or control operation when the monitoring device is not working.

(iii) Where a carbon adsorber is the recapture device or final recovery device:

(a) A record of the total regenerative stream mass or volumetric flow for each carbon bed regeneration cycle.

(b) A record of the total regenerative stream mass or volumetric flow for each carbon bed regeneration cycle during the full period of the compliance test (if group 1) or during the full period of the TRE index value determination (if group 2A).

(c) A record of the temperature of the carbon bed after each regeneration cycle [and within fifteen minutes of completing any cooling cycle(s).]

(d) A record of the temperature of the carbon bed after each regeneration cycle [and within fifteen minutes of completing any cooling cycle(s)] during the full period of the compliance test (if group 1) or during the full period of the TRE index value determination (if group 2A).

(e) Records of the times and durations of all periods during process or control operation when either monitoring device is not working.

(iv) Where an organic monitoring device is employed for monitoring the concentration level or reading at the outlet of a recapture or final recovery device other than an absorber, condenser, or carbon adsorber, or where an organic monitoring device is employed as an alternative to the otherwise specified monitoring device for an absorber, condenser, or carbon adsorber, the owner or operator shall maintain the following monitoring records:

(a) Continuous records of the concentration level or reading of the outlet of the recapture or final recovery device.

(b) A record of the concentration level or reading of the outlet of the recapture or final recovery device averaged over the full period of the compliance test (if group 1) or during the full period of the TRE index value determination (if group 2A).

(c) A record of the daily average concentration level or reading for each operating day.

(d) Records of the times and durations of all periods excluded from the daily average as specified in paragraph (J)(3)(f) of this rule and any other periods during process or control operation when the monitoring device is not working.

(e) For any bypass line that could divert a group 1 process vent directly to the atmosphere, the owner or operator shall maintain the monitoring records specified in paragraph (J)(3)(e)(i) or (J)(3)(e)(ii) of this rule, whichever is applicable.

(i) Where a flow indicator is employed for a bypass line:

(a) Hourly records of whether the flow indicator was operating and whether a diversion of the vent stream to the atmosphere was detected at any time during the hour.

(b) Records of the times and durations of all periods when the flow indicator is not operating or the vent stream is diverted to the atmosphere.

(ii) Where a car-seal or a lock-and-key type configuration is employed to secure the bypass line valve in the non-diverting position:

(a) A record indicating that a monthly visual inspection of the seal or closure mechanism has been done.

(b) Records of the times and durations of all periods when the seal mechanism is broken, the bypass line valve position has changed, the serial number of the broken car-seal has changed, or when the key to unlock the bypass line valve has been checked out.

(f) The daily average value of a monitored parameter shall be calculated as the average of all values recorded during the operating day by the continuous recorder, except for monitoring data recorded during the following periods:

(i) Monitoring system breakdowns, repairs, calibration checks, and zero (low-level) and high-level adjustments.

(ii) Start-ups.

(iii) Shutdowns.

(iv) Malfunctions.

(v) Periods of non-operation of the reactor or distillation unit, resulting in cessation of the emissions to which the monitoring applies.

(4) Compliance demonstration records for group 1 process vents.

Any owner or operator of a group 1 process vent shall keep an up-to-date, readily accessible record of the data specified in paragraphs (J)(4)(a) to (J)(4)(e) of this rule, as applicable, to demonstrate compliance with paragraph (F) of this rule.

(a) When using a flare to comply with paragraph (F)(1)(a) of this rule, the owner or operator shall maintain records on the following:

(i) Flare design (i.e., steam-assisted, air-assisted, or non-assisted);

(ii) The results of all visible emission readings, heat content determinations (and associated concentration measurements), and exit velocity determinations (and associated flow rate measurements) for a compliance test conducted pursuant to paragraph (I)(1) of this rule; and

(iii) All periods during the compliance test when the pilot flame is absent.

(b) When using a boiler or process heater to comply with paragraph (F)(1)(b) of this rule, the owner or operator shall maintain records on the heat input capacity of the boiler or process heater and a description of the location at which the vent stream is introduced into the boiler or process heater.

(c) When using a boiler or process heater to comply with paragraph (F)(1)(c) of this rule, the owner or operator shall maintain records on the location at which the vent stream is introduced into the boiler or process heater.

(d) When using a control device (boiler, process heater, incinerator, or recapture device) to comply with paragraph (F)(1)(d) of this rule, the owner or operator shall maintain records of the following:

(i) The results of compliance tests conducted pursuant to paragraph (I)(3) of this rule.

(ii) The results of parameter monitoring during the compliance test, including results of continuous parameter monitoring averaged over the full period of the compliance test.

(iii) For a boiler or process heater, a description of the location at which the vent stream is introduced into the boiler or process heater for the compliance test. For a boiler or process heater, a description of the location at which the vent stream is introduced into the boiler or process heater for the compliance test.

(e) When using a recovery system, process change, or other means to achieve and maintain a TRE index value greater than 1.0 and to comply with paragraph (F)(1)(e) of this rule, the owner or operator shall maintain records of the TRE determination tests conducted pursuant to paragraph (I)(7) of this rule.

(f) When using a combustion device to comply with paragraph (F)(1)(f) of this rule, the owner or operator shall maintain records of the following:

(i) The date of installation of the combustion device.

(ii) Documentation on why the combustion device is not capable of reliably reducing VOC emissions from the process vent in order to meet the requirement of paragraph (F)(1)(d) of this rule, including the results of any VOC emissions testing.

(iii) Information on the combustion device pertaining to design specifications, good engineering practices, and any requirements under applicable laws, as defined under paragraph (I) of rule 3745-31-01 of the Administrative Code.

(iv) The results of compliance tests conducted pursuant to paragraph (I)(3) of this rule.

(v) The results of parameter monitoring averaged over the full period of the compliance test.

(g) When using a scrubber or other halogen reduction device following a combustion device to control a halogenated vent stream to comply with paragraph (F)(1)(g)(i) of this rule, the owner or operator shall maintain records of the following:

(i) The results of compliance tests conducted pursuant to paragraph (I)(4) of this rule.

(ii) The results of parameter monitoring averaged over the full period of the compliance test.

(h) When transferring a group 1 process vent for disposal to comply with paragraph (F)(1)(h) of this rule, the owner or operator shall maintain records on the name and location of the transferee and the identification of the group 1 process vent.

(5) Compliance demonstration records for group 2A process vents.

Any owner or operator of a group 2A process vent shall keep an up-to-date, readily accessible record of the data specified in paragraphs (J)(5)(a) to (J)(5)(b) of this rule to demonstrate compliance with paragraph (F)(2) of this rule.

(a) The results of the TRE determination test (i.e., measurements of vent stream flow rate and vent stream concentrations used in the TRE index value determination, all measured while the vent stream is normally routed and constituted).

(b) The calculations to determine the TRE index value.

(c) The results of parameter monitoring for the final recovery device (absorber, condensers, carbon adsorber, or other recovery device) during the TRE determination test, including results of continuous parameter monitoring averaged over the full period of the TRE determination test.

(6) Compliance demonstration records for group 2B process vents.

Any owner or operator of a group 2B process vent shall keep an up-to-date, readily accessible record of the data specified in paragraph (J)(6)(a), (J)(6)(b), or (J)(6)(c) of this rule, whichever is applicable, to demonstrate compliance with paragraph (F)(3) of this rule.

(a) Any owner or operator who elects to demonstrate that a process vent is a group 2B process vent based on a flow rate being less than 0.30 scfm shall maintain a record of the vent stream flow rate as determined in accordance with paragraph (E)(3) of this rule, including documentation of any engineering assessments, measurements, and calculations.

(b) Any owner or operator who elects to demonstrate that a process vent is a group 2B process vent based on a VOC concentration being less than five hundred ppmv shall maintain a record of the vent stream VOC concentration as determined in accordance with paragraph (E)(4) of this rule, including documentation of any engineering assessments, measurements, and calculations.

(c) Any owner or operator who elects to demonstrate that a process vent not from a recovery system is a group 2B process vent based on the TRE index value being greater than 1.0 shall maintain records of the following:

(i) A description and identification of the process operation or device preceding the process vent.

(ii) The TRE index value as determined in accordance with paragraph (E)(8) of this rule, including documentation of any engineering assessments, measurements, and calculations.

(d) Any owner or operator who elects to demonstrate that a process vent from a recovery system is a group 2B process vent based on the TRE index value being greater than 4.0 shall maintain records of the following:

(i) A description and identification of the final recovery device preceding the process vent.

(ii) The TRE index value as determined in accordance with paragraph (E)(8) of this rule, including documentation of any engineering assessments, measurements, and calculations.

(7) Records pertaining to the one thousand one hundred tons per year exemption.

The owner or operator of a reactor or distillation unit subject to this rule and qualifying for the exemption under paragraph (C)(2) of this rule regarding a process unit with a total design capacity for all chemicals produced within that unit of less than one thousand one hundred tons per year, shall keep up-to-date records detailing the design production capacity of the process unit, including any change in equipment or process operation that affects the total design production capacity.

(K) Reporting requirements.

(1) (General) The provisions under paragraph (K) of this rule describe the contents of reports and identify the reporting dates for the following reports:

(a) Initial compliance status report.

(b) Semiannual compliance status reports.

(c) Process change reports for group 2A and group 2B process vents.

(2) Initial compliance status report.

Each owner or operator of a reactor or distillation unit subject to this rule shall submit an initial compliance status report within sixty calendar days after the compliance dates specified in paragraph (G) of this rule as follows:

(a) The initial compliance status report shall include the results of any process vent group determinations, compliance tests, TRE determination tests, inspections, values of monitored parameters established during compliance tests and TRE determination tests, and any other information used to demonstrate compliance and recorded pursuant to paragraphs (J)(4) to (J)(6) of this rule.

(b) For compliance tests, TRE determination tests, and any group determinations based on measurements, the initial compliance status report shall include one complete test report for each test method used for a particular kind of process vent. For additional tests and measurements performed for the same kind of process vent using the same test method, the test results or measurement results shall be submitted, but a complete test report is not required.

(c) A complete test report shall include a brief process description, sampling site description, description of sampling and analysis procedures and any modifications to standard procedures, quality assurance procedures, record

of operating conditions during the test, record of preparation of standards, record of calibrations, raw data sheets for field sampling, raw data sheets for field and laboratory analyses, documentation of calculations, and any other information required by the test method.

(d) For each monitored parameter for which a range is required to be established under paragraph (H)(7) of this rule (pertains to group 1 and group 2A process vents), the compliance status report shall include the following information:

(i) The specific range of the monitored parameter(s) for each control device and final recovery device.

(ii) The rationale for the specific range for each parameter for each control device and final recovery device, including any data and calculations used to develop the range and a description of why the range indicates proper operation of the control device or final recovery device.

(3) Semiannual compliance status reports.

The owner or operator of a reactor or distillation unit subject to this rule shall submit semiannual compliance status reports containing the information in paragraphs (K)(3)(a), (K)(3)(b), and (K)(3)(c) of this rule. The semiannual compliance status reports shall be submitted no later than sixty calendar days after the end of each six-month period to the appropriate Ohio environmental protection agency district office or local air agency. The first report shall be submitted no later than eight months after the date the initial compliance status report is due and shall cover the six-month period beginning on the date the initial compliance status report is due.

(a) Semiannual reports on parameter monitoring for group 1 process vents.

For a group 1 process vent, the semiannual compliance status reports shall include the following recorded information:

(i) Reports of daily average values of monitored parameters for all operating days when the daily average values recorded under paragraph (J)(3) of this rule were outside the ranges established in the initial compliance status report or permit issued by the director.

(ii) Reports of the times and durations of all periods recorded under paragraph (J)(3) of this rule when the monitoring device is not working or monitoring data is not collected during process operation generating the process vent stream or during operation of the control or recovery device.

(iii) Reports of the times and durations of all periods recorded under paragraph (J)(3)(e)(i)(b) of this rule when the vent stream is diverted to the atmosphere through a bypass line.

(iv) Reports of the duration of all periods recorded under paragraph (J)(3)(e)(ii)(b) of this rule when the seal mechanism is broken, the bypass line valve position has changed, the serial number of the broken car-seal has changed, or the key to unlock the bypass line valve has been checked out.

(v) Reports of the times and durations of all periods recorded under paragraph (J)(3)(a)(iii) of this rule in which all pilot flames of a flare were absent.

(vi) Reports of all carbon bed regeneration cycles during which the parameters recorded under paragraphs (J)(3)(d)(iii)(a) and (J)(3)(d)(iii)(c) of this rule were outside the ranges established in the initial compliance status report or permit issued by the director.

(vii) Reports on monitoring devices and parameters approved by the director pursuant to paragraph (H)(8) of this rule.

(b) Semiannual reports on parameter monitoring for group 2A process vents.

For a group 2A process vent, the semiannual compliance status reports shall include the following recorded information:

(i) Reports of daily average values of monitored parameters for all operating days when the daily average values recorded under paragraph (J)(3) of this rule were outside the ranges established in the initial compliance status report or permit issued by the director.

(ii) Reports of all carbon bed regeneration cycles during which the parameters recorded under paragraphs (J)(3)(d)(iii)(a) and (J)(3)(d)(iii)(c) of this rule were outside the ranges established in the initial compliance status report or permit issued by the director.

(iii) Reports on monitoring devices and parameters approved by the director pursuant to paragraph (H)(8) of this rule.

(c) Semiannual reports on subsequent compliance tests for group 1 process vents or subsequent TRE determination tests for group 2A process vents.

If any subsequent compliance tests or subsequent TRE determination tests are conducted during the semiannual reporting period after the initial compliance status report has been submitted, the semiannual compliance

status report shall include the data recorded pursuant to paragraphs (J)(4) and (J)(5) of this rule.

(4) Process change reports for group 2A and group 2B process vents.

Whenever a process change, as defined in paragraph (D)(6) of this rule, is made that causes the process vent group status to change, the owner or operator shall submit a report to the appropriate Ohio environmental protection agency district office or local air agency within sixty calendar days after the process change. The report shall include the following, whichever is applicable:

(a) For a group 2A or group 2B process vent that becomes a group 1 process vent, the report shall include all of the following:

(i) A description of the process change.

(ii) The results of the redetermination of the flow rate, VOC concentration, and TRE index value required under paragraph (D)(6) of this rule and recorded under paragraph (J)(2)(d) of this rule.

(iii) A statement that the owner or operator will comply with the requirements of paragraph (F)(1) of this rule for group 1 process vents by the date specified in paragraph (G)(3)(a) of this rule.

(b) For a group 2B process vent that becomes a group 2A process vent, the report shall include all of the following:

(i) A description of the process change.

(ii) The results of the determination or redetermination of the TRE index value required under paragraph (D)(6) of this rule and recorded under paragraph (J)(2)(d) of this rule.

(iii) A statement that the owner or operator will comply with the requirements of paragraph (F)(2) of this rule for group 2A process vents by the date specified in paragraph (G)(3)(b) of this rule.

(c) For a group 2A process vent that becomes a group 2B process, the report shall include all of the following:

(i) A description of the process change.

(ii) The results of the determination or redetermination of the TRE index value required under paragraph (D)(6) of this rule and recorded under paragraph (J)(2)(d) of this rule.

(iii) A statement that the owner or operator will comply with the requirements of paragraph (F)(3) of this rule for group 2B process vents by the date specified in paragraph (G)(3)(c) of this rule.

(d) For a group 2B process vent under a specific basis that becomes a group 2A process vent under a different basis, the report shall include all of the following:

(i) A description of the process change.

(ii) The results of the redetermination of the basis for the group 2 process vent under paragraph (D)(6) of this rule and recorded under paragraph (J)(2)(d) of this rule.

(iii) A statement that the owner or operator will comply with the requirements of paragraph (F)(3) of this rule for group 2B process vents by the date specified in paragraph (G)(3)(c) of this rule.

(e) The owner or operator is not required to submit a report of a process change if one of the conditions listed in paragraphs (K)(3)(d)(i) to (K)(3)(d)(v) of this rule is met.

(i) The process change does not meet the definition of a process change in paragraph (D)(6) of this rule; or

(ii) The vent stream flow rate is redetermined for a group 2B process vent that is based on flow rate according to paragraph (D)(6)(a) of this rule and the redetermined value is less than 0.30 scfm; or

(iii) The VOC concentration is redetermined for a group 2B process vent that is based on flow rate according to paragraph (D)(6)(b) of this rule and the redetermined value is less than five hundred ppmv; or

(iv) The TRE index value is redetermined for a group 2B process vent that is based on the TRE index value according to paragraph (D)(6)(c) of this rule and the redetermined value is greater than 1.0 for a process vent not from a recovery system or greater than 4.0 for a process vent from a recovery system; or

(v) The TRE index value is redetermined for a group 2A process vent according to paragraph (D)(6)(c) of this rule and the redetermined TRE index value for a process vent from a recovery system is greater than 1.0 and less than or equal to 4.0.

(L) Requirements on applicability notification and permit application.

(1) The owner or operator of a reactor or distillation unit that is subject to this rule, is located in Butler, Clermont, Hamilton, or Warren county, and has an initial startup date before May 27, 2005 shall notify the appropriate Ohio environmental protection agency district office or local air agency in writing that the reactor or distillation operation is subject to this rule. The notification, which shall be submitted not later than July 26, 2005, shall provide the information specified in paragraph (L)(5) of this rule:

(2) The owner or operator of a reactor or distillation unit that is subject to this rule, is located in Butler, Clermont, Hamilton, or Warren county, and has an initial startup date on or after May 27, 2005 shall notify the appropriate Ohio environmental protection agency district office or local air agency in writing that the reactor or distillation unit is subject to this rule. The notification, which shall be submitted not later than either the date of initial startup of the reactor or distillation unit or July 26, 2005 (whichever is later), shall provide the information specified in paragraph (L)(5) of this rule. The application for a permit-to-install under rule 3745-31-02 of the Administrative Code may be used to fulfill the notification requirements of this paragraph.

(3) The owner or operator of a reactor or distillation unit that is subject to this rule, is located in Ashtabula, Cuyahoga, Geauga, Lake, Lorain, Medina, Portage, or Summit county, and has an initial startup date before the effective date of this rule shall notify the appropriate Ohio environmental protection agency district office or local air agency in writing that the reactor or distillation operation is subject to this rule. The notification, which shall be submitted not later than sixty days after the effective date of this rule, shall provide the information specified in paragraph (L)(5) of this rule.

(4) The owner or operator of a reactor or distillation unit that is subject to this rule, is located in Ashtabula, Cuyahoga, Geauga, Lake, Lorain, Medina, Portage, or Summit county, and has an initial startup date on or after the effective date of this rule shall notify the appropriate Ohio environmental protection agency district office or local air agency in writing that the reactor or distillation unit is subject to this rule. The notification, which shall be submitted not later than either the date of initial startup of the reactor or distillation unit or sixty days after the effective date of this rule (whichever is later), shall provide the information specified in paragraph (L)(5) of this rule. The application for a permit-to-install under rule 3745-31-02 of the Administrative Code may be used to fulfill the notification requirements of this paragraph.

(5) The notification required in paragraphs (L)(1) to (L)(4) of this rule shall include the following information:

(a) Name and address of the owner or operator;

(b) Address (i.e., physical location) of the facility;

(c) Equipment description and Ohio EPA application number (if assigned) of the reactor or distillation unit;

(d) Identification of the applicable requirements, the means of compliance, and the compliance date for the reactor or distillation unit under this rule; and

(e) Regarding a permit for the reactor or distillation unit, whichever of the following is applicable:

(i) Submission of an application for a permit-to-operate, modification, or renewal of a permit-to-operate in accordance with paragraph (B) of rule 3745-35-02 of the Administrative Code; or

(ii) Statement of intent to submit an application for a Title V permit or modification of a Title V permit in accordance with rule 3745-77-02 or rule 3745-77-08 of the Administrative Code, respectively.

Effective: 08/25/2008

R.C. 119.032 review dates: 02/21/2008 and 08/25/2013

CERTIFIED ELECTRONICALLY
Certification

08/15/2008
Date

Promulgated Under: 119.03
Statutory Authority: 3704.03(E)
Rule Amplifies: 3704.03(E), 3704.03(A)
Prior Effective Dates: 5/27/2005

3745-21-14 **Control of volatile organic compound emissions from process vents in batch operations.**

[Comment: For dates and availability of non-regulatory government publications, publications of recognized organizations and associations, federal rules, and federal statutory provisions referenced in this rule, see paragraph (HH) at the end of rule 3745-21-01 of the Administrative Code entitled "Referenced materials."]

(A) Applicability.

(1) Except as otherwise provided in paragraphs (A)(4) and (A)(5) of this rule, the requirements of paragraph (C) of this rule shall apply to any facility that has a batch process train associated with any of the following SIC codes: 2821, 2833, 2834, 2861, 2865, 2869, or 2879, and meets either the following criteria in paragraphs (A)(1)(a) and (A)(1)(b) of this rule or paragraphs (A)(1)(c) and (A)(1)(d) of this rule:

(a) The facility is located in Butler, Clermont, Hamilton, or Warren county; and

(b) The facility has a combined total potential to emit for VOC emissions equal to or greater than one hundred tons of VOC per calendar year on or after May 27, 2005 from all of the following:

(i) Process vents in batch operations;

(ii) All non-CTG sources; and

(iii) Unregulated emissions from CTG sources except sources regulated under Subparts BBB, III, NNN, and RRR of 40 CFR Part 60 and sources regulated under Subpart T of 40 CFR Part 63.

(c) The facility is located in Ashtabula, Cuyahoga, Geauga, Lake, Lorain, Medina, Portage, or Summit county; and

(d) The facility has a combined total potential to emit for VOC emissions equal to or greater than one hundred tons of VOC per calendar year on or after August 25, 2008 from all of the following:

(i) Process vents in batch operations;

(ii) All non-CTG sources; and

(iii) Unregulated emissions from CTG sources except sources regulated under Subparts BBB, III, NNN, and RRR of 40 CFR Part 60 and sources regulated under Subpart T of 40 CFR Part 63.

(2) For the purposes of paragraphs (A)(1)(a) to (A)(1)(d) of this rule, a source shall be considered regulated by a paragraph, rule or subpart if it is subject to the limits of that paragraph, rule, or subpart. A source is not considered regulated by a paragraph, rule, or subpart if it is not subject to the limits of that paragraph, rule, or subpart. For example, if the source is covered by an exemption in the paragraph, rule, or subpart, or the applicability criteria of the paragraph or subpart are not met, then the source is not subject to that paragraph, rule, or subpart. A source is also not considered regulated if there is no rule contained in this chapter regulating the source category.

(3) Once a facility has met the applicability requirements of paragraphs (A)(1)(a) and (A)(1)(b) of this rule on or after May 27, 2005, or the applicability requirements of paragraphs (A)(1)(c) and (A)(1)(d) of this rule on or after the effective date of this rule, it is always subject to the requirements of paragraph (C) of this rule, except as otherwise provided in paragraphs (A)(4) and (A)(5) of this rule.

(4) In the event a facility meets the applicability requirements under paragraphs (A)(1)(a) and (A)(1)(b) of this rule, but reduces its potential to emit for volatile organic compounds by means of federally enforceable operational restrictions (e.g., production, hours of operation, or capacity utilization) to less than one hundred tons per year by no later than May 27, 2006, and documents that the actual VOC emissions from the above combined sources have never exceeded one hundred tons per year after the baseline year (1990) of the state implementation plan for ozone, the facility is not subject to the requirements of paragraph (C) of this rule.

(5) In the event a facility meets the applicability requirements under paragraphs (A)(1)(c) and (A)(1)(d) of this rule, but reduces its potential to emit for VOCs by means of federally enforceable operational restriction(s) (e.g., production, hours of operation, or capacity utilization) to less than one hundred tons per year by no later than twelve months after the effective date of this rule, and documents that the actual VOC emissions from the above combined sources have never exceeded one hundred tons per year after the baseline year (2002) of the state implementation plan for ozone, the facility is not subject to the requirements of paragraph (C) of this rule.

(B) Definitions.

The definitions applicable to this rule are contained in paragraph (W) of rule 3745-21-01 of the Administrative Code.

(C) Applicability for batch process trains and unit operations (batch operations).

(1) Except as otherwise provided in paragraphs (C)(2) and (C)(3) of this rule, the owner or operator of a batch process train at a facility that meets the

applicability criteria of paragraph (A)(1) of this rule is subject to the requirements of paragraphs (D) to (K) of this rule.

(2) The requirements of paragraphs (D) to (J) of this rule shall not apply to:

(a) Any emissions unit included within any early reduction program, as specified in 40 CFR part 63, and published in 57 Federal Register 61970 (December 29, 1992), evidenced by a timely enforceable commitment approved by USEPA.

(b) Any unit operation at a synthesized pharmaceutical manufacturing facility that is subject to a requirement under paragraph (W)(1) of rule 3745-21-09 of the Administrative Code.

(3) The following unit operations within a batch process train and batch process trains are exempt from the control requirements of paragraph (D) of this rule, but are still subject to the requirements in paragraphs (H), (I) and (K) of this rule pertaining to recordkeeping, reporting, applicability notification, and permit application.

(a) Any unit operation with uncontrolled total annual mass emissions of less than or equal to five hundred pounds per year of VOC.

Such unit operations are also excluded from the calculation of the total annual mass emissions for a batch process train. If the uncontrolled total annual mass emissions from such exempt unit operation exceed five hundred pounds per year of VOC in any subsequent year, the owner or operator shall calculate applicability in accordance with paragraph (C)(4) of this rule for both the individual unit operation and the batch process train containing the unit operation.

(b) Any batch process train containing process vents that have, in the aggregate, uncontrolled total annual mass emissions, as determined in accordance with paragraph (E)(1) of this rule, of less than thirty thousand pounds per year of VOC for all products manufactured in such batch process train.

(4) The applicability equations in paragraph (C)(5) of this rule, which require the calculation of uncontrolled total annual mass emissions and flow rate value, shall be used to determine whether a unit operation or a batch process train is subject to the control requirements set forth in paragraph (D) of this rule. The applicability equation shall be applied to the following:

(a) Any unit operation with uncontrolled total annual mass emissions that exceed five hundred pounds per year and with a VOC concentration greater than five hundred ppmv. In this individual determination, no applicability

analysis shall be performed for any unit operation with a VOC concentration of less than or equal to five hundred ppmv.

(b) Any batch process train containing process vents which, in the aggregate, have uncontrolled total annual mass emissions of thirty thousand pounds per year or more of VOC from all products manufactured in the batch process train. Any unit operation with uncontrolled total annual mass emissions exceeding five hundred pounds per year, regardless of VOC concentration, shall be included in the aggregate applicability analysis.

(5) Applicability equations.

(a) The applicability equations under paragraph (C)(5) of this rule are specific to volatility.

(b) For purposes of paragraph (C)(5) of this rule, the following abbreviations are employed:

(i) FR = calculated applicability flow rate, scfm.

(ii) UTAME = uncontrolled total annual mass emissions of VOC, expressed as pounds per year.

(iii) WAV = weighted average volatility.

(iv) $MVOC_i$ = mass of VOC component i.

(v) $MWVOC_i$ = molecular weight of VOC component i.

(vi) VP_i = vapor pressure of VOC component i.

(vii) i = subscript denoting a specific VOC component.

(viii) n = total number of VOC components.

(c) Weighted average volatility shall be calculated as follows:

$$WAV = \frac{\sum_{i=1}^{n} \frac{(VP_i)(MVOC_i)}{(MWVOC_i)}}{\sum_{i=1}^{n} \frac{(MVOC_i)}{(MWVOC_i)}}$$

(d) For purposes of determining applicability, calculated applicability flow rate values shall be determined as follows:

(i) Process vents with a WAV that is less than or equal to seventy-five mmHg at twenty degrees Celsius (sixty-eight degrees Fahrenheit), shall use the following equation:

FR = [0.07 (UTAME)] - 1,821

(ii) Process vents with a WAV that is greater than seventy-five mmHg, but less than or equal to one hundred fifty mmHg at twenty degrees Celsius (sixty-eight degrees Fahrenheit), shall use the following equation:

FR = [0.031 (UTAME)] - 494

(iii) Process vents a WAV that is greater than one hundred fifty mmHg at twenty degrees Celsius (sixty-eight degrees Fahrenheit), shall use the following equation:

FR = [0.013 (UTAME)] - 301

(D) Control requirements for VOC emissions from process vents.

The control requirements set forth in paragraph (D) of this rule shall apply to process vents of batch process trains and unit operations within batch process trains (batch operations).

(1) The owner or operator of a unit operation with an average flow rate, as determined in accordance with paragraph (E)(2) of this rule, below the flow rate value calculated by the applicability equations contained in paragraph (C)(5) of this rule, shall reduce uncontrolled VOC emissions from such unit operation by an overall efficiency, on average, of at least ninety per cent, or to twenty ppmv, per batch cycle.

(2) The owner or operator of a batch process train with an average flow rate, as determined in accordance with paragraph (E)(2)(b) of this rule, below the flow rate value calculated by the applicability equations contained in paragraph (C)(5) of this rule, shall reduce uncontrolled VOC emissions from such batch process train by an overall efficiency, on average, of at least ninety per cent, or to twenty ppmv, per batch cycle.

(3) If a boiler or process heater is used to comply with paragraph (D)(1) or (D)(2) of this rule, the vent stream shall be introduced into the flame zone of the boiler or process heater.

(4) If a flare is used to comply with paragraph (D)(1) or (D)(2) of this rule, the flare shall comply with the requirements of paragraph (DD)(10)(d) of rule 3745-21-09 of the Administrative Code. If a process, not subject to this rule, vents an emergency relief discharge into a common flare header of this flare, the

requirements of paragraph (DD)(10)(d) of rule 3745-21-09 of the Administrative Code shall not apply during such emergency relief discharge.

(E) Determination of uncontrolled total annual mass emissions and actual weighted average flow rate values for a batch process train or unit operation.

(1) Uncontrolled total annual mass emissions shall be determined by the following methods:

(a) Direct process vent emissions measurements taken prior to any release to the atmosphere, following any recovery device, prior to mixing with vents from other process trains or unrelated operations, and prior to any control device, provided such measurements conform with the requirements of measuring the mass flow rate of VOC incoming to the control device as set forth in paragraphs (F)(6)(b), (F)(6)(c)(i)(a) and (F)(6)(c)(i)(b) of this rule.

(b) Engineering estimates of the uncontrolled VOC emissions from a process vent or process vents, in the aggregate, within a batch process train, using either the potential or permitted number of batch cycles per year or total production as represented in the permit for the batch process train as follows:

(i) Engineering estimates of the uncontrolled VOC emissions shall be based upon accepted chemical engineering principles, measurable process parameters, or physical or chemical laws and their properties. Examples of methods include, but are not limited to, the following:

(a) Use of material balances based on process stoichiometry to estimate maximum VOC concentrations.

(b) Estimation of maximum flow rate based on physical equipment design such as pump or blower capacities.

(c) Estimation of VOC concentrations based on saturation conditions.

(ii) All data, assumptions and procedures used in any engineering estimate shall be documented.

(2) Average flow rate shall be determined by any of the following methods:

(a) Direct process vent flow rate measurements taken prior to any release to the atmosphere, following any recovery device, prior to mixing with vents from other process trains or unrelated operations, and prior to any control device, provided such measurements conform with the requirements of measuring incoming volumetric flow rate set forth in paragraph (F)(6)(b) of this rule.

(b) Average flow rate for a unit operation having multiple emission events or batch process trains shall be the weighted average flow rate, calculated as follows:

$$WAF = \frac{\sum_{i=1}^{n} (AFR_i)(ADE_i)}{\sum_{i=1}^{n} (ADE_i)}$$

where:

WAF = actual weighted average flow rate for a unit operation or batch process train.

AFR_i = average flow rate of emission event i.

ADE_i = annual duration of emission event i.

i = subscript denoting a specific emission event.

n = number of emission events.

(c) Engineering estimates calculated in accordance with the requirements in paragraph (E)(1)(b) of this rule.

(3) For purposes of determining the average flow rate for steam vacuuming systems, the steam flow shall be included in the average flow rate calculation.

(F) Compliance testing requirements for a batch process train or unit operation.

(1) Upon the director's request, the owner or operator of a batch process train or unit operation within a batch process train shall conduct testing to demonstrate compliance with paragraph (D) this rule. The owner or operator shall, at its own expense, conduct such tests in accordance with the applicable test methods and procedures specified in paragraphs (F)(4), (F)(5), and (F)(6) of this rule.

(2) Notwithstanding paragraph (F)(1) of this rule, flares and process boilers used to comply with the control requirements of paragraph (D) of this rule shall be exempt from compliance testing requirements.

(3) When a flare is used to comply with the control requirements of paragraph (D) of this rule, the flare shall comply with the requirements of paragraph (DD)(10)(d) of rule 3745-21-09 of the Administrative Code.

(4) The owner or operator of a batch process train or unit operation within a batch process train that is exempt from the control requirements of paragraph (D) of

this rule due to an average flow rate that is equal to or above the calculated applicability flow rate or due to a VOC concentration of less than or equal to five hundred ppmv (unit operation) shall demonstrate, upon the director's request, the absence of oversized gas moving equipment in any manifold. Gas moving equipment shall be considered oversized if it exceeds the maximum requirements of the exhaust flow rate by more than thirty per cent.

(5) For the purpose of demonstrating compliance with the control requirements in paragraph (D) of this rule, the batch process train or unit operation shall be run at representative operating conditions and flow rates during any compliance test.

(6) The following methods in 40 CFR part 60, appendix A shall be used to demonstrate compliance with the reduction efficiency requirement set forth in paragraph (D) of this rule:

(a) USEPA method 1 or 1A, as appropriate, for selection of the sampling sites if the flow measuring device is not a rotameter. The control device inlet sampling site for determination of vent stream VOC composition reduction efficiency shall be prior to the control device and after the control device.

(b) USEPA method 2, 2A, 2B, 2C, or 2D, as appropriate, for determination of gas stream volumetric flow rate flow measurements, which shall be taken continuously. No traverse is necessary when the flow measuring device is an ultrasonic probe.

(c) USEPA method 25A or USEPA method 18, if applicable, to determine the concentration of VOC in the control device inlet and outlet.

(i) The sampling time for each run shall be as follows:

(a) For batch cycles less than eight hours in length, readings shall be taken continuously over the entire length of the batch cycle with a maximum of fifteen-minute intervals between measurements if using USEPA method 25A. If using USEPA method 18, readings shall be taken continuously with a maximum of fifteen-minute intervals between measurements throughout the batch cycle unless it becomes necessary to change the impinger train, in which case a thirty-minute interval shall not be exceeded.

(b) For batch cycles of eight hours and greater in length, the owner of operator may either test in accordance with the test procedures defined in paragraph (F)(6)(c)(i)(a) of this rule or the owner or operator may elect to perform tests, pursuant to either USEPA method 25A or USEPA method 18, only during those portions of each emission event which define the emission profile of each emission event occurring within the batch cycle. For each emission

event of less than four hours in duration, the owner or operator shall test continuously over the entire emission event as set forth in paragraph (F)(6)(c)(i)(a) of this rule. For each emission event of greater than four hours in duration, the owner or operator shall elect either to perform a minimum of three one hour test runs during the emission event or shall test continuously over the entire emission event within each unit operation in the batch process train. To demonstrate that the portion of the emission event to be tested defines the emission profile for the emission event, the owner or operator electing to rely on this option shall develop an emission profile for the entire emission event. Such emission profile shall be based upon either process knowledge or test data collected. Examples of information that could constitute process knowledge include, but are not limited to, calculations based on material balances and process stoichiometry. Previous test results may be used provided such results are still relevant to the current process vent stream conditions.

(ii) The mass emission rate from the process vent or inlet to the control device shall be determined by combining concentration and flow rate measurements taken simultaneously at sampling sites selected in accordance with paragraph (F)(6)(a) of this rule throughout the batch cycle.

(iii) The mass emission rate from the control device outlet shall be obtained by combining concentration and flow rate measurements taken simultaneously at sampling sites selected in accordance with paragraph (F)(6)(a) of this rule throughout the batch cycle.

(iv) The efficiency of the control device shall be determined by integrating the mass emission rates obtained in paragraphs (F)(6)(c)(ii) and (F)(6)(c)(iii) of this rule, over the time of the batch cycle and dividing the difference in inlet and outlet mass flow totals by the inlet mass flow total.

(7) The owner or operator of a batch process train or unit operation may propose an alternative test method or procedures to demonstrate compliance with the control requirements set forth in paragraph (D) of this rule. Such method or procedures shall be approved by the director and USEPA in writing and shall be included as federally enforceable permit conditions.

(8) In the absence of a request by the director to conduct compliance testing in accordance with provisions of this rule, the owner or operator may demonstrate compliance by the use of engineering estimates or process stoichiometry.

(9) During the compliance test conducted to demonstrate compliance with the control requirements of paragraph (D) of this rule, the owner or operator shall establish the operating limits (operating parameter values) for the monitoring devices required under paragraph (G) of this rule.

(G) Monitoring requirements for control devices.

(1) Every owner or operator using an incinerator to comply with paragraph (D) of this rule shall install, calibrate, maintain and operate, according to manufacturer's specifications, temperature monitoring devices with an accuracy of plus or minus one per cent of the temperature being measured expressed in degrees Celsius or plus or minus 1.8 per cent of the temperature being measured expressed in degrees Fahrenheit, each equipped with a continuous recorder as follows:

(a) Where a catalytic incinerator is used, temperature monitoring devices shall be installed in the gas stream immediately before and after the catalyst bed.

(b) Where an incinerator other than a catalytic incinerator is used, a temperature monitoring device shall be installed in the combustion chamber.

(2) The owner or operator using a flare to comply with paragraph (D) of this rule shall install, calibrate, maintain and operate, according to manufacturer's specifications, a heat sensing device, such as an ultra-violet beam sensor or thermocouple, at the pilot light to indicate continuous presence of a flame.

(3) Every owner or operator using a scrubber to comply with paragraph (D) of this rule shall install, calibrate, maintain, and operate, according to manufacturer's specifications, the following:

(a) A temperature monitoring device for scrubbant liquid having an accuracy of plus or minus one per cent of the temperature being monitored expressed in degrees Celsius or plus or minus 1.8 per cent of the temperature being measured expressed in degrees Fahrenheit and a specific gravity device for scrubbant liquid, each equipped with a continuous recorder; or

(b) A VOC monitoring device used to indicate the concentration of VOC exiting the control device based on a detection principle such as infra-red photoionization, or thermal conductivity, equipped with a continuous recorder.

(4) Every owner or operator using a condenser to comply with paragraph (D) of this rule shall install, calibrate, maintain, and operate, according to manufacturer's specifications, the following:

(a) A condenser exit temperature monitoring device equipped with a continuous recorder and having an accuracy of plus or minus one per cent of the temperature being monitored expressed in degrees Celsius or plus or minus 1.8 per cent of the temperature being measured expressed in degrees Fahrenheit, equipped with a continuous recorder; or

(b) A VOC monitoring device used to indicate the concentration of VOC such as infra-red, photoionization, or thermal conductivity, each equipped with a continuous recorder.

(5) Every owner or operator using a carbon adsorber to comply with paragraph (D). of this rule shall install, calibrate, maintain, and operate, according to the manufacturer's specifications, the following equipment:

(a) An integrating regeneration steam flow monitoring device having an accuracy of plus or minus ten per cent, and a carbon bed temperature monitoring device having an accuracy of plus or minus one per cent of the temperature being monitored expressed in degrees Celsius or plus or minus 1.8 per cent of the temperature being measured expressed in degrees Fahrenheit, both equipped with a continuous recorder; or

(b) A VOC monitoring device used to indicate the concentration level of VOC exiting such device based on a detection principle such as infra-red, photoionization, or thermal conductivity, equipped with a continuous recorder.

(6) Every owner or operator using a boiler or process heater with a design heat input capacity less than one hundred fifty million Btu per hour that is to comply with paragraph (D) of this rule shall install, calibrate, maintain, and operate, according to the manufacturer's specifications, a temperature monitoring device in the firebox with an accuracy of plus or minus one per cent of the temperature being measured expressed in degrees Celsius or plus or minus 1.8 per cent of the temperature being measured expressed in degrees Fahrenheit, equipped with a continuous recorder. Any boiler or process heater in which all process vent streams are introduced with primary fuel is exempt from this requirement.

(7) Every owner or operator of a process vent shall be permitted to monitor by an alternative method or may monitor parameters other than those listed in paragraphs (G)(1) to (G)(6) of this rule, if approved by the director and USEPA in writing. Such alternative method or parameters shall be contained in a permit pertaining to the process vent as federally enforceable permit conditions.

(H) Recordkeeping for a batch process train or unit operation.

(1) Every owner or operator of a unit operation or batch process train that is exempt from the control requirements per paragraph (C)(3)(a) or (C)(3)(b) of this rule

shall keep records of the uncontrolled total annual mass emissions for such unit operation or batch process train, as applicable, and documentation verifying these values or measurements. The documentation shall include the engineering calculations, any measurements made in accordance with paragraph (F) of this rule, and the potential or permitted number of batch cycles per year, or, in the alternative, total production as represented in the permit pertaining to the unit operation or batch process train.

(2) Every owner or operator of a unit operation or batch process train that is exempt from control requirements per paragraph (C)(4) of this rule shall keep the following records:

(a) The uncontrolled total annual mass emissions and documentation verifying these values or measurements.

The documentation shall include any engineering calculations, any measurements made in accordance with paragraph (F) of this rule, and the potential or permitted number of batch cycles per year, or, in the alternative, total production as represented in the permit pertaining to the unit operation or batch process train.

(b) The average flow rate in scfm and documentation verifying this value.

(c) The calculated weighted average volatility and documentation verifying this value.

(d) The calculated applicability flow rate value from paragraph (C)(5)(d) of this rule.

(3) Every owner or operator of a batch process train or unit operation subject to the control requirements of paragraph (D) of this rule shall keep records of the following parameters required to be monitored under paragraph (G) of this rule:

(a) If using a thermal or catalytic incinerator to comply with paragraph (D) of this rule, records indicating the average combustion chamber temperature of the incinerator (or the average temperature upstream and downstream of the catalyst bed for a catalytic incinerator), measured continuously and averaged over the same time period as the compliance test that demonstrated compliance.

(b) If using a flare (i.e., steam-assisted, air-assisted or nonassisted) to comply with paragraph (D) of this rule, continuous records of the flare pilot flame monitoring and records of all periods of operations during which the pilot flame is absent.

(c) If using any of the following as a control device, the following records:

(i) Where a scrubber is used, the exit specific gravity (or alternative parameter which is a measure of the degree of absorbing liquid saturation, if approved by the director) and the average exit temperature of the absorbing liquid, measured continuously and averaged over the same time period as the compliance test that demonstrated compliance (both measured while the vent stream is routed normally).

(ii) Where a condenser is used, the average exit (product side) temperature measured continuously and averaged over the same time period as the compliance test that demonstrated compliance while the vent stream is routed normally.

(iii) Where a carbon adsorber is used, the total steam mass flow measured continuously and averaged over the same time period as the compliance test that demonstrated compliance (full carbon bed cycle), temperature of the carbon bed after regeneration (and within fifteen minutes after completion of any cooling cycle(s)), and duration of the carbon bed steaming cycle (all measured while the vent stream is routed normally).

(iv) As an alternative to paragraph (H)(3)(c)(i), (H)(3)(c)(ii), or (H)(3)(c)(iii) of this rule, at a minimum, records indicating the concentration level or reading indicated by the VOC monitoring device at the outlet of the scrubber, condenser, or carbon adsorber, measured continuously and averaged over the same time period as the compliance test that demonstrated compliance (while the vent stream is routed normally).

(4) Every owner or operator of a unit operation claiming a vent stream concentration exemption level, as set forth in paragraph (C)(4)(a) of this rule, shall maintain records to indicate the vent stream concentration is less than or equal to five hundred ppmv, and shall notify the director in writing if the vent stream concentration at any time equals or exceeds five hundred ppmv, within sixty days after such event. Such notification shall include a copy of all records of such event.

(5) An owner or operator of a batch process train or unit operation subject to the control requirements of paragraph (D) of this rule may maintain alternative records other than those listed in paragraph (C) of this rule. Any alternative recordkeeping shall be approved by the director and USEPA in writing and shall be contained in the permit pertaining to the batch process train or unit operation as federally enforceable permit conditions.

(6) The owner or operator of a unit operation or batch process train that is exempt from the control requirements of paragraph (D) of this rule shall notify the director in writing if the uncontrolled total annual mass emissions from such unit

operation or batch process train exceed the threshold in paragraph (C)(3)(a) or (C)(3)(b) of this rule, respectively, within sixty days after the event occurs. Such notification shall include a copy of all records of such event.

(7) Every owner or operator of a batch process train or unit operation required to keep records under this rule shall maintain such records at the facility for a minimum period of five years and shall make all such records available to the director upon request.

(I) Reporting requirements.

(1) (General) The provisions under paragraph (I) of this rule describe the contents of reports and identify the reporting dates for the following reports:

(a) Initial compliance status report.

(b) Semiannual compliance status reports.

(2) Initial compliance status report.

Each owner or operator of a batch process train or unit operation subject to this rule shall submit an initial compliance status report within sixty calendar days after the compliance dates specified in paragraph (I) of this rule as follows:

(a) The initial compliance status report shall include the results of exemption, process vent determinations, compliance tests, values of monitored parameters established during compliance tests, and any other information used to demonstrate compliance and recorded pursuant to paragraph (H) of this rule.

(b) For compliance tests and process vent determinations based on measurements, the initial compliance status report shall include one complete test report for each test method used for a particular kind of process vent. For additional tests and measurements performed for the same kind of process vent using the same test method, the test results or measurement results shall be submitted, but a complete test report is not required.

(c) A complete test report shall include a brief process description, sampling site description, description of sampling and analysis procedures and any modifications to standard procedures, quality assurance procedures, record of operating conditions during the test, record of preparation of standards, record of calibrations, raw data sheets for field sampling, raw data sheets for field and laboratory analyses, documentation of calculations, and any other information required by the test method.

(d) For each monitored parameter for which a range is required to be established under paragraph (F)(9) of this rule, the compliance status report shall include the following information:

(i) The specific range of the monitored parameter(s) for each control device.

(ii) The rationale for the specific range for each parameter for each control device, including any data and calculations used to develop the range and a description of why the range indicates proper operation of the control device or final recovery device.

(3) Semiannual compliance status reports.

The owner or operator of a batch process train or unit operation subject to this rule shall submit semiannual compliance status reports containing the information in paragraphs (I)(3)(a) and (I)(3)(b) of this rule. The semiannual compliance status report shall be submitted no later than sixty calendar days after the end of each six-month period to the Ohio EPA or its delegated local air agency. The first report shall be submitted no later than eight months after the date the initial compliance status report is due and shall cover the six-month period beginning on the date the initial compliance status report is due.

(a) Semiannual reports on parameter monitoring for controlled process vents.

For a process vent equipped with a control device to meet the requirement of paragraph (D) of this rule, the semiannual compliance status reports shall include the following recorded information:

(i) Reports of monitored parameters for all operating days when the average values recorded under paragraph (H)(3) of this rule were outside the ranges established in the initial compliance status report or permit issued by the director.

(ii) Reports of the times and durations of all periods recorded under paragraph (J)(3) of this rule when the monitoring device is not working or monitoring data is not collected during process operation generating the process vent stream or during operation of the control or recovery device.

(iii) Reports of the times and durations of all periods recorded under paragraph (H)(3)(b) of this rule in which the pilot flame is absent.

(iv) Reports on monitoring devices and parameters approved by the director pursuant to paragraph (H)(5) of this rule.

(b) Semiannual reports on subsequent compliance tests for controlled process vents and subsequent process vent determination tests.

If any subsequent compliance tests or subsequent process vent determination tests are conducted during the semiannual reporting period after the initial compliance status report has been submitted, the semiannual compliance status report shall include the data recorded pursuant to paragraphs (H) of this rule.

(J) Compliance dates.

(1) Except where otherwise specified within this rule, any batch process train that is subject to this rule shall comply with the requirements of this rule by no later than the following dates:

(a) For any batch process train located in Butler, Clermont, Hamilton, or Warren county for which installation commenced before May 27, 2005, the compliance date of the batch process train is May 27, 2006 or the date the facility becomes subject to this rule, whichever is later.

(b) For any batch process train located in Butler, Clermont, Hamilton, or Warren county for which installation commenced on or after May 27, 2005, the compliance date of the batch process train is the date of initial startup of the batch process train.

(c) For any batch process train located in Ashtabula, Cuyahoga, Geauga, Lake, Lorain, Medina, Portage, or Summit county for which installation commenced before the effective date of this rule, the compliance date of the batch process train is twelve months from the effective date of this rule or the date the facility becomes subject to this rule, whichever is later.

(d) For any batch process train located in Ashtabula, Cuyahoga, Geauga, Lake, Lorain, Medina, Portage, or Summit county for which installation commenced on or after the effective date on this rule, the compliance date of the batch process train is the date of initial startup of the batch process train.

(2) In the event a facility reduces its potential to emit pursuant to paragraph (A)(4) or (A)(5) of this rule, the date on which the facility subsequently meets the applicability criteria of paragraph (A)(1) of this rule is the date the facility becomes subject to this rule.

(3) In the event a batch process train or unit operation is exempted under paragraph (C)(3) of this rule or is not required to reduce uncontrolled VOC emissions pursuant to paragraph (D)(1) or (D)(2) and is subsequently equipped with a control device to meet the VOC reduction requirements of paragraph (D)(1) or

(D)(2) of this rule, the compliance date of the batch process train or unit operation is the date of first startup of the installed control device. Until the date of first startup of the installed control device, the batch process train or unit operation shall continue to meet either the exemption level or the criteria pertaining to applicability equations.

(4) For any control device that is used to comply with paragraph (D) of this rule, the owner or operator shall demonstrate compliance by testing the control device in accordance with paragraph (F) of this rule within ninety days after the compliance date.

(5) Additional testing of the control device or testing of the process vents of a batch process train or unit operation in accordance with paragraph (F) of this rule may be required by the director to ensure continued compliance with paragraph (D) of this rule.

(K) Requirements on applicability notification and permit application.

(1) The owner or operator of a facility that is subject to this rule, is located in Butler, Clermont, Hamilton, or Warren county, and that has an initial startup of a batch process train before May 27, 2005 shall notify the appropriate Ohio environmental protection agency district office or local air agency in writing that the batch process train is subject to this rule. The notification, which shall be submitted not later than July 26, 2005, shall provide the information specified in paragraph (K)(5) of this rule.

(2) The owner or operator of a facility that is subject to this rule, is located in Butler, Clermont, Hamilton, or Warren county, and has an initial startup of a batch process train on or after May 27, 2005, shall notify the appropriate Ohio environmental protection agency district office or local air agency in writing that the batch process train is subject to this rule. The notification, which shall be submitted not later than either the date of initial startup of the facility or July 26, 2006 (whichever is later), shall provide the information specified in paragraph (K)(5) of this rule. The application for an installation permit under rule 3745-31-02 of the Administrative Code may be used to fulfill the notification requirements of this paragraph.

(3) The owner or operator of a facility that is subject to this rule, is located in Ashtabula, Cuyahoga, Geauga, Lake, Lorain, Medina, Portage, or Summit county, and has an initial startup of a batch process train before the effective date of this rule shall notify the appropriate Ohio environmental protection agency district office or local air agency in writing that the batch process train is subject to this rule. The notification, which shall be submitted not later than sixty days after the effective date of this rule, shall provide the information specified in paragraph (K)(5) of this rule.

(4) The owner or operator of a facility that is subject to this rule, is located in Ashtabula, Cuyahoga, Geauga, Lake, Lorain, Medina, Portage, or Summit county, and has an initial startup of a batch process train on or after the effective date of this rule, shall notify the appropriate Ohio environmental protection agency district office or local air agency in writing that the batch process train is subject to this rule. The notification, which shall be submitted not later than either the date of initial startup of the facility or sixty days after the effective date of this rule (whichever is later), shall provide the information specified in paragraph (K)(5) of this rule. The application for an installation permit under rule 3745-31-02 of the Administrative Code may be used to fulfill the notification requirements of this paragraph.

(5) The notification required in paragraphs (K)(1) to (K)(4) of this rule shall include the following information:

(a) Name and address of the owner or operator;

(b) Address (i.e., physical location) of the facility;

(c) Equipment description and Ohio EPA application number (if assigned) of any batch process train or unit operation;

(d) Identification of the applicable requirements, the means of compliance, and the compliance date for any batch process train; and

(e) Regarding a permit for any batch process train or unit operation, whichever of the following is applicable:

(i) Submission of an application for an operating permit, modification, or renewal of an operating permit in accordance with paragraph (B) of rule 3745-31-02 of the Administrative Code; or

[Comment: Applications requiring submittal prior to June 30, 2008, were submitted in accordance with Chapter 3745- 35 of the Administrative Code.]

(ii) Statement of intent to submit an application for a Title V permit or modification of a Title V permit in accordance with rule 3745-77-02 or rule 3745-77-08 of the Administrative Code, respectively.

Effective: 04/02/2009

R.C. 119.032 review dates: 08/25/2013

CERTIFIED ELECTRONICALLY
Certification

03/23/2009
Date

Promulgated Under: 119.03
Statutory Authority: 3704.03(E)
Rule Amplifies: 3704.03(A), 3704.03(E)
Prior Effective Dates: 08/25/08, 05/27/05

3745-21-15 **Control of volatile organic compound emissions from wood furniture manufacturing operations.**

[Comment: For dates and availability of non-regulatory government publications, publications of recognized organizations and associations, federal rules, and federal statutory provisions referenced in this rule, see the "Incorporation by Reference" paragraph at the end of rule 3745-21-01 of the Administrative Code.]

(A) Rule applicability.

(1) Except as otherwise provided in paragraph (A)(2) of this rule, this rule shall apply to any facility that meets both of the following criteria:

(a) The facility is located in Ashtabula, Butler, Clermont, Cuyahoga, Geauga, Hamilton, Lake, Lorain, Medina, Portage, Summit, or Warren county; and

(b) The facility has wood furniture manufacturing operations.

(2) Excluded from the requirements of this rule are the following:

(a) Any facility that has a potential to emit for VOC of less than 25.0 tons per year for all wood furniture manufacturing operations combined.

(b) Any facility that meets all the requirements of paragraphs (A)(2)(b)(i) and (A)(2)(b)(ii) of this rule:

(i) The facility uses no more than six hundred twenty-five gallons per month, for every month, or no more than seven thousand five hundred gallons per rolling twelve-month period, for every twelve-month period, of coating, adhesive, cleaning, and washoff materials, including thinners for such materials, for all wood furniture manufacturing operations combined. A rolling twelve-month period includes the previous twelve months of operation. The owner or operator of the facility shall maintain records of the total gallons of coating, adhesive, cleaning, and washoff materials, including thinners, used each month.

(ii) All records specified under paragraph (A)(2)(b)(i) of this rule shall be retained by the owner or operator for a period of not less than five years and shall be made available to the director or any authorized representative of the director for review during normal business hours.

(B) Definitions.

The definitions applicable to this rule are contained in paragraph (X) of rule 3745-21-01 of the Administrative Code.

(C) Overall requirements for wood furniture manufacturing operations.

The owner or operator of a wood furniture manufacturing operation at a facility that is subject to this rule shall comply with the requirements of paragraphs (D) to (N) of this rule.

(D) VOC emission limitations for finishing operations.

For any finishing operation, the owner or operator shall meet the requirements of any one paragraph of paragraphs (D)(1) to (D)(5) of this rule. If the owner or operator elects to use paragraph (D)(4) or (D)(5) of this rule, the owner or operator shall also meet the requirements of paragraph (M) of this rule.

(1) VOC content limit for topcoats only.

(a) The VOC content of any topcoat shall not exceed 0.8 pound of VOC per pound of solids, as applied.

(b) There is no VOC content limit for sealers, stains, basecoats, and washcoats.

(2) VOC content limits for topcoats and sealers only.

(a) The VOC content of any topcoat shall not exceed 1.8 pounds of VOC per pound of solids, as applied, except for acid-cured alkyd amino conversion varnish topcoats.

(b) The VOC content of any acid-cured alkyd amino conversion varnish topcoat shall not exceed 2.0 pound of VOC per pound of solids, as applied.

(c) The VOC content of any sealer shall not exceed 1.9 pounds of VOC per pound of solids, as applied, except for acid-cured alkyd amino sealers.

(d) The VOC content of any acid-cured alkyd amino sealer shall not exceed 2.3 pound of VOC per pound of solids, as applied.

(e) There is no VOC content limit for stains, basecoats, and washcoats.

(3) VOC emission control system for topcoats and/or sealers.

In lieu of a VOC content limit for any topcoat subject to paragraph (D)(1) or (D)(2) of this rule or any sealer subject to paragraph (D)(2) of this rule, a VOC emission control system shall be used that achieves for each topcoat or sealer employed and designated for control, an overall reduction of VOC emissions that is equal to or greater than the required overall control efficiency determined in accordance with paragraph (I)(6) of this rule. Also, if the VOC emission

control system includes a thermal or catalytic oxidizer, the control efficiency of the thermal or catalytic oxidizer for VOC emissions shall be at least ninety per cent by weight.

(4) Daily VOC emissions limit for topcoats only.

Each topcoat employed in any day shall be subject to either a daily VOC emissions limit or a VOC content limit, as specified in paragraphs (D)(4)(a) and (D)(4)(b) of this rule. There is no VOC limit for sealers, stains, basecoats, and washcoats.

(a) The daily actual VOC emissions (E_{day}) shall not exceed the daily VOC emissions limit (L_{day}) in which "E_{day}" and "L_{day}" are calculated for topcoats as follows:

$$E_{day} = \sum_{i=1}^{n} (AT_i)(CT_i)(1 - F_i)$$

$$L_{day} = (0.90) \sum_{i=1}^{n} (AT_i)(LT_i)$$

where:

AT_i = amount of solids of topcoat "i" used for the day, in pounds of solids.

CT_i = VOC content of topcoat "i" in pounds of VOC per pound of solids, as applied.

F_i = fraction by weight of VOC emissions from topcoat "i" reduced or prevented from being emitted by a VOC emission control system.

LT_i = emission limit for topcoat "i" expressed as 0.8 pound of VOC per pound of solids, as applied. However, for a facility located in Butler, Clermont, Hamilton, or Warren county, if topcoat "i" is employed at the facility as of May 27, 2005 and if the VOC content of topcoat "i" is less than the previously stated emissions limit, then the facility must use the actual VOC content of topcoat "i" as of the May 27, 2005 as the emissions limit for topcoat "i". Likewise, for a facility located in Ashtabula, Cuyahoga, Geauga, Lake, Lorain, Medina, Portage, or Summit county, if topcoat "i" is employed at the facility as of the effective date of this rule and if the VOC content of topcoat "i" is less than the previously stated emissions limit, then the facility must use the actual VOC content of topcoat "i" as of the effective date of this rule as the emissions limit for topcoat "i".

i = subscript denoting a specific topcoat selected by the owner or operator for inclusion in the daily VOC emissions limit.

n = total number of topcoats selected by the owner or operator for inclusion in the daily VOC emissions limit

(b) For any topcoat not selected by the owner or operator for inclusion in the daily VOC emissions limit, the VOC content of the topcoat shall not exceed 0.8 pound of VOC per pound of solids.

(5) Daily VOC emissions limit for topcoats, sealers, and other finishing materials.

Each topcoat and sealer employed in any day shall be subject to either a daily VOC emissions limit or a VOC content limit, as specified in paragraphs (D)(5)(a) and (D)(5)(b) of this rule. Stains, basecoats, and washcoats can be included in the daily VOC emissions limit. There is no VOC limit for stains, basecoats, and washcoats that are not included in the alternative daily VOC emissions limit.

(a) The daily actual VOC emissions (E_{day}) shall not exceed the daily VOC emissions limit (L_{day}) in which "E_{day}" and "L_{day}" are calculated for finishing materials as follows:

$$E_{day} = \sum_{i=1}^{n} (A_i)(C_i)(1 - F_i)$$

$$L_{day} = (0.90) \sum_{i=1}^{n} (A_i)(L_i)$$

where:

A_i = amount of finishing material "i" employed for the day, expressed in pounds of solids if a topcoat, sealer, washcoat, or basecoat; or in gallons if a stain.

C_i = VOC content of finishing material "i" employed for the day, expressed in pounds of VOC per gallon of solids, as applied, if a topcoat, sealer, washcoat, or basecoat; or in pounds of VOC per gallon, as applied, if a stain.

F_i = fraction by weight of VOC emissions from finishing material "i" reduced or prevented from being emitted by a VOC emission control system.

L_i = emissions limit for finishing material "i" based of the type of finishing material as follows: 1.8 pounds of VOC per gallon of solids for a topcoat; 1.9 pounds of VOC per gallon of solids for a sealer; 9.0 pounds of VOC per gallon of solids for a washcoat; 1.2 pound of VOC per gallon of solids for a

basecoat; and 0.791 pounds of VOC per gallon of coating for a stain. However, for a facility located in Butler, Clermont, Hamilton, or Warren county, if finishing material "i" is employed at the facility as of May 27, 2005 and if the VOC content of finishing material "i" is less than the previously stated emissions limit, then the facility must use the actual VOC content of finishing material "i" as of May 27, 2005 as the emissions limit for finishing material "i". Likewise, for a facility located in Ashtabula, Cuyahoga, Geauga, Lake, Lorain, Medina, Portage, or Summit county, if finishing material "i" is employed at the facility as of the effective date of this rule and if the VOC content of finishing material "i" is less than the previously stated emissions limit, then the facility must use the actual VOC content of finishing material "i" as of the effective date of this rule as the emissions limit for finishing material "i".

i = subscript denoting a specific finishing material selected by the owner or operator for inclusion in the alternative daily VOC emissions limit.

n = total number of finishing material selected by the owner or operator for inclusion in the alternative daily VOC emissions limit.

(b) For any topcoat or sealer not selected by the owner or operator for inclusion in the daily VOC emissions limit, the VOC content limit shall be the following:

(i) The VOC content of any topcoat shall not exceed 1.8 pounds of VOC per pound of solids, except for acid-cured alkyd amino conversion varnish topcoats.

(ii) The VOC content of any acid-cured alkyd amino conversion varnish topcoat shall not exceed 2.0 pound of VOC per pound of solids.

(iii) The VOC content of any sealer shall not exceed 1.9 pounds of VOC per pound of solids, except for acid-cured alkyd amino sealers.

(iv) The VOC content of any acid-cured alkyd amino sealer shall not exceed 2.3 pounds of VOC per pound of solids.

(E) VOC content limit for strippable spray booth materials.

The VOC content of any strippable spray booth material employed for wood furniture manufacturing operations shall not exceed 0.8 pound of VOC per pound of solids, as applied.

(F) Work practice requirements.

The owner or operator of a facility subject to this rule shall prepare and maintain a written work practice implementation plan that defines environmentally desirable work practices for each wood furniture manufacturing operation and addresses each of the work practices contained in paragraphs (b) to (d) and (f) to (k) of 40 CFR 63.803 and the following:

(1) For any terms pertaining to the work practices that are not defined under paragraph (B) of this rule, the definitions under 40 CFR 63.801 shall be the used;

(2) The wording "Administrator (or delegated State, local, or Tribal authority)" is replaced by the wording "Ohio environmental protection agency district office or local air agency;"

(3) The wording "organic HAP solvent" is replaced by the wording "VOC solvent;" and

(4) The plan shall be developed no more than sixty days after the compliance date.

(G) Compliance dates.

(1) Except where otherwise specified within this rule, any owner or operator of a facility that is subject to this rule shall comply with the requirements of this rule by no later than the following dates:

(a) For a facility located in Butler, Clermont, Hamilton, or Warren county for which installation commenced before May 27, 2005, the compliance date of any wood furniture manufacturing operation within the facility is either May 27, 2006 or the date of initial startup of the wood furniture manufacturing operation, whichever is later.

(b) For a facility located in Butler, Clermont, Hamilton, or Warren county for which installation commenced on or after May 27, 2005, the compliance date of any wood furniture manufacturing operation within the facility is the date of initial startup of the wood furniture manufacturing operation.

(c) For a facility located in Ashtabula, Cuyahoga, Geauga, Lake, Lorain, Medina, Portage, or Summit county, for which installation commenced before the effective date of this rule, the compliance date of any wood furniture manufacturing operation within the facility is either twelve months from the effective date of this rule or the date of initial startup of the wood furniture manufacturing operation, whichever is later.

(d) For a facility located in Ashtabula, Cuyahoga, Geauga, Lake, Lorain, Medina, Portage, or Summit county for which installation commenced on or after the effective date of this rule, the compliance date of any wood

furniture manufacturing operation within the facility is the date of initial startup of the wood furniture manufacturing operation.

(2) For a VOC emission control system that is used for a finishing operation to comply with paragraph (D)(3), (D)(4), or (D)(5) of this rule, the owner or operator shall demonstrate the overall control efficiency of the VOC emission control system by testing the finishing operation and the VOC emission control system in accordance with paragraph (J) of this rule within ninety days after the finishing operation's compliance date.

(3) Additional testing of the finishing operation and the VOC emission control system in accordance with paragraph (J) of this rule may be required by the director to ensure continued compliance.

(H) Monitoring requirements for a VOC emission control system.

(1) For any incinerator used to comply with paragraph (D) of this rule, the owner or operator shall install, calibrate, maintain, and operate according to manufacturer's specifications, a temperature monitoring device equipped with a continuous recorder. The temperature monitoring device shall be located as follows:

(a) Where a thermal incinerator is used, the temperature monitoring device shall be located in the firebox or in the duct immediately downstream of the firebox in a position before any substantial heat exchange occurs.

(b) Where a catalytic incinerator is used, temperature monitoring devices shall be located in the gas stream immediately before and after the catalyst bed.

(2) For any regenerative carbon adsorber used to comply with paragraph (D) of this rule, the owner or operator shall install, calibrate, maintain and operate according to manufacturer's specifications the following monitoring devices:

(a) An integrating regeneration steam flow monitoring device, having an accuracy of plus or minus ten per cent or better, shall be employed for recording the total regeneration steam mass or volumetric flow for each regeneration cycle.

(b) A carbon bed temperature monitoring device shall be employed for recording the carbon bed temperature after each regeneration and within fifteen minutes of completing any cooling cycle.

(3) For any concentrator, such as a zeolite wheel or rotary carbon bed concentrator, used to comply with paragraph (D) of this rule, the owner or operator shall install, calibrate, maintain, and operate according to manufacturer's

specifications the following monitoring devices equipped with continuous recorders:

(a) A temperature monitoring device for the desorption gas stream.

(b) A pressure monitoring device to measure pressure drop across the zeolite wheel or rotary carbon bed with an accuracy of at least 0.5 inches of water column or five percent of the measured value, whichever is larger.

(4) Where a control device other than an incinerator, regenerative carbon adsorber, or concentrator is used to comply with paragraph (D) of this rule, or as an alternative to the monitoring device specified in paragraphs (H)(1) to (H)(3) of this rule, the owner or operator shall install, calibrate, maintain, and operate, according to manufacturer's specifications, an organic monitoring device equipped with a continuous recorder for measuring the concentration level at the outlet of the control device.

(5) For any capture system that is part of a VOC emissions control used to comply with paragraph (D) of this rule and that is a permanent total enclosure, the owner or operator shall install, calibrate, maintain, and operate, according to manufacturer's specifications, either one of the following:

(a) A pressure monitoring device equipped with a continuous recorder to measure pressure drop across the enclosure with an accuracy of at least 0.5 inch of water column or five per cent of the measured value, whichever is larger.

(b) A monitoring device equipped with a continuous recorder to measure the facial velocity of air through any natural draft opening into the enclosure.

(6) For any capture system that is part of a VOC emissions control used to comply with paragraph (D) of this rule and that is not a permanent total enclosure, the owner or operator shall install, calibrate, maintain, and operate, according to manufacturer's specifications, either one of the following:

(a) A pressure monitoring device equipped with a continuous recorder to measure the static pressure for each capture device with an accuracy of at least 0.5 inch of water column or five per cent of the measured value, whichever is larger.

(b) A flow rate monitoring device equipped with a continuous recorder to measure the flow in the duct from each capture device in the capture system to the control device with an accuracy of at least ten per cent of the flow.

(7) Capture system bypass line.

For any capture system that is part of a VOC emissions control used to comply with paragraph (D) of this rule and that contains bypass lines which could divert flow (i.e., VOC emissions) away from the control device to the atmosphere, the owner or operator shall for each bypass line meet the requirements of any one paragraph of paragraphs (H)(7)(a) to (H)(7)(e) of this rule.

(a) (Flow control position indicator) The owner or operator shall install, calibrate, maintain, and operate, according to manufacturer's specifications, a flow control position indicator that takes a reading at least once every fifteen minutes and provides a record indicating whether the emissions are directed to the control device or diverted from the control device. The flow control position indicator shall be installed at the entrance to any bypass line that could divert the emissions away from the control device to the atmosphere.

(b) (Car-seal or lock-n-key) The owner or operator shall secure the bypass line valve in the nondiverting position with a car-seal or a lock-and-key type configuration. The owner or operator shall perform a visual inspection of the seal or closure mechanism at least once every month to ensure that the valve is maintained in the non-diverting position and the emissions are not diverted away from the add-on control device to the atmosphere.

(c) (Valve closure monitoring) The owner or operator shall employ a valve closure monitoring system that ensures any bypass line valve is in the closed (nondiverting) position through monitoring of valve position at least once every fifteen minutes. The owner or operator shall inspect the monitoring system at least once every month to verify that the monitor will indicate valve position.

(d) (Automatic shutdown system) The owner or operator shall employ an automatic shutdown system in which the finishing operation is stopped when flow is diverted by the bypass line away from the control device to the atmosphere when the finishing operation is running. The owner or operator shall inspect the automatic shutdown system at least once every month to verify that it will detect diversions of flow and shut down the finishing operation.

(e) (Flow direction indicator) The owner or operator shall install, calibrate, maintain, and operate, according to the manufacturer's specifications, a flow direction indicator that takes a reading at least once every fifteen minutes and provides a record indicating whether the emissions are directed to the control device or diverted from the control device. Each time the flow direction changes, the next reading of the time of occurrence and flow direction must be recorded. The flow direction indicator shall be installed in each bypass line or air makeup supply line that could divert the VOC emissions away from the control device to the atmosphere.

(8) (Alternative control device monitoring) An owner or operator of a control device that is part of a VOC emission control system used to comply with paragraph (D) of this rule may request approval to employ monitoring devices and monitoring parameters other than those listed in paragraphs (H)(1) to (H)(4) of this rule. The request shall be submitted according to the procedures specified in paragraph (H)(10) of this rule.

(9) (Alternative capture system monitoring or bypass line monitoring) An owner or operator of a capture system that is part of a VOC emission control system used to comply with paragraph (D) of this rule may request approval to employ monitoring devices and monitoring parameters other than those listed in paragraphs (H)(5) to (H)(7) of this rule. The request shall be submitted according to the procedures specified in paragraph (H)(10) of this rule.

(10) Approval of alternative monitoring devices and parameters.

(a) The owner or operator who has been directed by any paragraph of this rule to request approval to employ monitoring devices and parameters other than required by this rule shall submit within an application for a permit or modification of a permit, or by other means provided by the Ohio EPA or its delegated local air agency, the following information:

(i) A description of the parameter(s) to be monitored to ensure the capture system or control device is operated in conformance with its design and achieves the specified emission limit, per cent reduction, or nominal efficiency, and an explanation of the criteria used to select the parameter(s).

(ii) A description of the methods and procedures that will be used to demonstrate that the parameter indicates proper operation of the capture system or control device being monitored, the schedule for this demonstration, and a statement that the owner or operator will establish an operating limit (operating parameter value) for the monitored parameter as part of the initial compliance status report required in paragraph (L)(2) of this rule.

(iii) The frequency and content of monitoring, recording, and reporting if monitoring and recording is not continuous, or if reports of operating values when the monitored parameter value is outside the operating limit established in the permit or initial compliance report will not be included in semiannual compliance status reports as specified in paragraph (L)(3) of this rule. The rationale for the proposed monitoring, recording, and reporting system shall be included.

(b) If the monitoring device and parameter are approved by the director, the monitoring device and parameter, including associated records and semiannual reporting, shall be specified in the terms and conditions of a permit or order issued by the director. If required by USEPA, any director-approved alternative monitoring device and/or monitoring parameter shall be submitted to USEPA for approval as a revision of the state implementation plan.

(11) While operating a VOC emission control system for controlling emissions from a finishing operation, the owner or operator shall not operate any capture or control device within the VOC emission control system at a three-hour block average value greater than or less than (as appropriate) the operating limits (operating parameter values) established during the most recent compliance test(s) that demonstrated compliance, except during periods of startup, shutdown, and malfunction.

(12) The owner or operator shall inspect the VOC emission control system and monitoring equipment to assure that the VOC emission control system is operating properly, and that no leaks or malfunctions have occurred or are occurring. The inspections shall be made at the frequency defined by the equipment manufacturer, or as otherwise appropriate for each VOC emission control system and monitoring equipment, but not less than monthly.

(I) Procedures for the VOC content and solids content of a coating, the VOC content for continuous coaters, and the determination of required overall control efficiency for controlled topcoats and sealers.

(1) The VOC content and solids content of a coating (finishing material or a strippable spray booth material) shall be determined by the owner or operator in accordance with paragraph (B) of rule 3745-21-10 of the Administrative Code, wherein formulation data or USEPA method 24 procedures (which include various ASTM measurement methods) may be employed.

(2) For a finishing material containing styrene, the VOC content and VOC emissions associated with styrene shall be based on an estimate of the unreacted styrene, which shall be calculated by multiplying the amount of styrene monomer in the finishing material, when it is applied, by a factor of 0.16.

(3) For a finishing material containing formaldehyde, the VOC content and VOC emissions associated with formaldehyde shall be based on the amount of free formaldehyde present in the finishing material when it is applied. The free formaldehyde content shall be determined in accordance with ASTM D1979-97, D5910-05, D6191-97(2003), or D6902-04e1.

(4) A certified product data sheet that provides data on VOC content and solids content shall be used by the owner or operator provided that any data based on a

measurement method shall be a measurement method that meets paragraph (I) of this rule.

(5) VOC content for continuous coaters.

The as-applied VOC content of a finishing material that is applied by a continuous coater shall be determined by the procedures under paragraph (I)(5)(a), (I)(5)(b), or (I)(5)(c) of this rule.

(a) (VOC content for a continuous coater) The as-applied VOC content of a finishing material that is applied by a continuous coater shall be determined by the VOC content of the finishing material in the reservoir and the VOC content as calculated from records.

(b) (VOC content and viscosity measurements for a continuous coater) The as-applied VOC content of a finishing material that is applied by a continuous coater shall be determined by the VOC content of the finishing material in the reservoir, maintaining a viscosity of the finishing material in the reservoir that is no less than the viscosity of the initial finishing material by monitoring the viscosity with a viscosity meter or by testing the viscosity of the initial finishing material and retesting the material in the reservoir each time solvent is added, and maintaining records of solvent additions. In order to use this procedure, the owner or operator shall provide data that demonstrates the correlation between viscosity of the finishing material and the VOC content of the finishing material in the reservoir.

(c) (Rolling thirty-day average VOC content for a dip coater) The as-applied VOC content of a finishing material that is applied by a dip coater shall be determined by a rolling thirty-day average of the VOC content of the finishing material and thinner added to the reservoir of the dip coater. The rolling thirty-day average VOC content (C30), expressed in pounds of VOC per pound of solids, as applied, shall be calculated for each day of operation of the dip coater as follows:

$$C_{30} = \frac{\sum_{i=1}^{n} (A_{i,30})(C_{i,\,VOC})}{\sum_{i=1}^{n} (A_{i,30})(C_{i,\,solids})}$$

where:

$A_{i,30}$ = amount of material "i" added to the reservoir of the dip coater during a thirty-day period consisting of the day of operation of the continuous coater plus the past twenty-nine calendar days, expressed in gallons.

$C_{i,VOC}$ = VOC content of material "i", expressed in pounds of VOC per gallon.

$C_{i,solids}$ = solids content of material "i", expressed in pounds of solids per gallon.

i = subscript denoting a specific material (finishing material or thinner) added to the reservoir of the dip coater during the thirty-day period.

n = total number of materials (finishing materials and thinners) added to the reservoir of the dip coater during the thirty-day period.

(6) Determination of required overall control efficiency for controlled topcoats and sealers.

For a VOC emission control system that is used to comply with paragraph (D)(3) of this rule, the overall reduction of VOC emissions, that is, the required overall control efficiency (R), expressed in per cent by weight, shall be determined as follows for each topcoat and sealer designated for control:

$R = [(C - L)/C](100)$

where:

C = the VOC content of the topcoat or sealer designated for control, in pounds of VOC per pound of solids, as applied.

L = the VOC content limit under paragraph (D)(1) or (D)(2) of this rule for the topcoat or sealer designated for control, in pounds of VOC per pound of solids, as applied.

(J) Compliance tests for VOC emission control systems.

(1) For a VOC emission control system used to comply with paragraph (D) of this rule, the owner or operator shall conduct an initial compliance test to determine the capture efficiency of the capture system, the control efficiency of the control device (or each control device if a combination of control devices), and the overall control efficiency of the VOC emission control system in accordance with paragraph (C) or rule 3745-21-10 of the Administrative Code wherein USEPA method 25 or 25A shall be used for determining the concentration of VOC in a gas stream.

(2) During the compliance test described in paragraphs (J)(1) of this rule that demonstrates compliance, the owner or operator shall establish the operating limits (operating parameter values) for the monitoring devices required under paragraph (H) of this rule as follows:

(a) If the control device is a thermal oxidizer, establish the operating limit as follows:

(i) Monitor and record the combustion temperature either in the firebox of the thermal oxidizer or immediately downstream of the firebox before any substantial heat exchange occurs at least once every fifteen minutes during each of the three runs of the compliance test.

(ii) Calculate and record the average combustion temperature maintained during the compliance test. This average combustion temperature is the minimum operating limit for the thermal oxidizer.

(b) If the control device is a catalytic oxidizer, establish the operating limits according to either paragraphs (J)(2)(b)(i) and (J)(2)(b)(ii) or paragraphs (J)(2)(b)(iii) and (J)(2)(b)(iv) of this rule.

(i) Monitor and record the temperature just before the catalyst bed and the temperature difference across the catalyst bed at least once every fifteen minutes during each of the three test runs comprising a compliance test.

(ii) Calculate and record the average temperature just before the catalyst bed and the average temperature difference across the catalyst bed maintained during the compliance test. These are the minimum operating limits for the catalytic oxidizer.

(iii) Monitor and record the temperature just before the catalyst bed at least once every fifteen minutes during each of the three test runs of the compliance test. Use this recorded temperature data to calculate and record the average temperature before the catalyst bed during the performance test. This is the minimum operating limit for the catalytic oxidizer.

(iv) Develop and implement an inspection and maintenance plan for the catalytic oxidizer(s) for which the owner or operator elects to monitor according to paragraph (J)(2)(b)(iii) of this rule. The plan must address, at a minimum, the elements specified in paragraphs (J)(2)(b)(iv)(a) to (J)(2)(b)(iv)(c) of this rule.

(a) Conduct an annual sampling and analysis of the catalyst activity (i.e., conversion efficiency) following the manufacturer's or catalyst supplier's recommended procedures. If problems are found during the catalyst activity test, the owner or operator shall replace the catalyst bed or take other corrective action consistent with the manufacturer's recommendations.

(b) Conduct monthly external inspection of the catalytic oxidizer system, including the burner assembly and fuel supply lines for problems and, as necessary, adjust the equipment to assure proper air-to-fuel mixtures.

(c) Conduct annual internal inspection of the catalyst bed to check for channeling, abrasion, and settling. If problems are found during the annual internal inspection of the catalyst, the owner or operator shall replace the catalyst bed or take other corrective action consistent with the manufacturer's recommendations. If the catalyst bed is replaced and is not of like or better kind and quality as the old catalyst, then the owner or operator shall conduct a new compliance test to determine the control efficiency of the catalytic oxidizer according to paragraph (I)(1) of this rule. If a catalyst bed is replaced and the replacement catalyst is of like or better kind and quality as the old catalyst, then a new compliance test to determine the control efficiency of the catalytic oxidizer is not required and the previously established operating limits for that catalytic oxidizer may be used.

(c) If the control device is a regenerative carbon adsorber, establish the operating limits as follows:

(i) Monitor and record the total regeneration desorbing gas (e.g., steam or nitrogen) mass flow for each regeneration cycle, and the carbon bed temperature after each carbon bed regeneration and cooling cycle for the regeneration cycle either immediately preceding or immediately following the compliance test.

(ii) The operating limits for the regenerative carbon adsorber are the minimum total desorbing gas mass flow recorded during the regeneration cycle and the maximum carbon bed temperature recorded after the cooling cycle.

(d) If the control device includes a concentrator, establish operating limits for the concentrator as follows:

(i) Monitor and record the desorption concentrate stream gas temperature at least once every fifteen minutes during each of the three runs of the compliance test.

(ii) Use the data collected during the compliance test to calculate and record the average temperature. This is the minimum operating limit for the desorption concentrate gas stream temperature.

(iii) Monitor and record the pressure drop of the dilute stream across the concentrator at least once every fifteen minutes during each of the three runs of the performance test.

(iv) Use the data collected during the compliance test to calculate and record the average pressure drop. This is the minimum operating limit for the pressure drop of the dilute stream across the concentrator.

(e) If the capture system is a permanent total enclosure, the operating limit is either one of the following, based on the criteria of a permanent total enclosure:

(i) The pressure drop across the enclosure shall be at least 0.007 inch of water.

(ii) The average facial velocity of air through all natural draft openings shall be at least two hundred feet per minute.

(f) If the capture system is a not a permanent total enclosure, establish an operating limit for each separate capture device in the capture system as follows:

(i) Monitor and record either the gas volumetric flow rate or the duct static pressure for each separate capture device in the emission capture system at least once every fifteen minutes during each of the three test runs of the compliance test for capture efficiency at a point in the duct between the capture device and the control device inlet.

(ii) Calculate and record the average gas volumetric flow rate or average duct static pressure for the three test runs for each capture device. This average gas volumetric flow rate or average duct static pressure is the minimum operating limit for that specific capture device.

(K) Recordkeeping.

(1) (General) All records specified under this paragraph shall be retained by the owner or operator for a period of not less than five years and shall be made available to the director or any authorized representative of the director for review during normal business hours. The following types of records are to be maintained by the owner or operator of a wood furniture manufacturing operation subject to this rule:

(a) Compliance demonstration records for finishing operations.

(b) Compliance demonstration records for strippable spray booth materials.

(c) Work practice implementation plan records.

(d) Monitoring records for VOC emission control systems.

(2) Compliance demonstration records for finishing operations.

For any finishing operation subject to paragraph (D) of this rule, the owner or operator shall maintain the following records:

(a) A record of the VOC emission requirement elected to be met under any one paragraph of paragraphs (D)(1) to (D)(5) of this rule for each day of operation of the finishing operation.

(b) A certified product data sheet for each finishing material that is subject to a VOC emission requirement elected to be met under paragraph (K)(2)(a) of this rule, and a certified product data sheet for any thinners or other VOC material added to the finishing materials before application.

(c) A record of the VOC content, in pounds of VOC per pound of solids, as applied, of each finishing material, other than a stain, that is subject to a VOC content limit or a daily VOC emissions limit under paragraph (D) of this rule, including documentation on any thinner or other VOC added to the finishing material before application.

(d) A record of the VOC content, in pounds of VOC per gallon, as applied of each stain subject to a daily VOC emissions limit under paragraph (D) of this rule, including documentation on any thinner or other VOC added to the stain before application.

(e) For any continuous coater that is subject to a VOC content limit under paragraph(D) of this rule, the records listed under paragraph (K)(2)(e)(i), (K)(2)(e)(ii), or (K)(2)(e)(iii) of this rule, whichever is applicable pursuant to paragraph (I)(5) of this rule:

(i) Records pertaining to VOC content for a continuous coater:

(a) For each day of operation, the gallons of each material (finishing material and thinner) added to the continuous coater reservoir.

(b) For each day of operation, the VOC content of the finishing material in the reservoir and the VOC content as calculated from records.

(ii) Records pertaining to VOC content and viscosity measurements for a continuous coater:

(a) For each day of operation, the gallons of each material (finishing material and thinner) added to the continuous coater reservoir and the viscosity measurements.

(b) The VOC content and viscosity of the initial finishing material.

(c) Data that demonstrates the correlation between the viscosity of the finishing material and the VOC content of the finishing material in the reservoir.

(iii) Records pertaining to a rolling thirty-day average VOC content for a dip coater:

(a) For each day of operation, the gallons of each material (finishing material and thinner) added to the dip coater reservoir.

(b) The VOC content (in pounds VOC per gallon) and solids content (in pounds of solids per gallon) for each material added to the dip coater reservoir.

(c) For each day of operation, the rolling thirty-day average VOC content in pounds of VOC per pound of solids, as determined in accordance with paragraph (I)(5)(c) of this rule.

(f) For a VOC emission control system that is employed to meet paragraph (D)(3) of this rule and that has an overall control efficiency of less than eighty-one per cent, the VOC content in pounds of VOC per gallon of solids and the required overall control efficiency, as determined in accordance with paragraph (I)(6) of this rule, for each topcoat and sealer being controlled.

(g) For a finishing operation subject to a daily VOC emissions limit under paragraph (D)(4) or (D)(5) of this rule, the amounts of finishing materials employed for each day of operation, the daily actual VOC emissions and the daily VOC emissions limit.

(h) For a VOC emission control system that is employed to meet paragraph (D)(3), (D)(4), or (D)(5) of this rule, the monitoring records specified under paragraph (K)(5) of this rule.

(3) Compliance demonstration records for strippable spray booth materials.

The owner or operator of a wood furniture manufacturing operation employing a strippable spray booth material subject to the VOC content limit in paragraph (E) of this rule shall maintain records of the following:

(a) A certified product data sheet for each strippable spray booth material as received and a certified product data sheet for any thinner added to a strippable spray booth material.

(b) The VOC content, in pounds of VOC per pound of solids, as applied, of each strippable spray booth material employed.

(4) Work practice implementation plan records.

The owner or operator of a wood furniture manufacturing operation subject to the work practice requirements in paragraph (E) of this rule shall maintain on-site the work practice implementation plan and all records associated with fulfilling the requirements of that plan, including, but not limited to the following:

(a) Records demonstrating that the operator training program required by 40 CFR 63.803(b) is in place.

(b) Records collected in accordance with the inspection and maintenance plan required by 40 CFR 63.803(c).

(c) Records associated with the cleaning solvent accounting system required by 40 CFR 63.803(d);

(d) Records associated with the limitation on the use of conventional air spray guns showing total finishing material usage and the percentage of finishing materials applied with conventional air spray guns for each semiannual period as required by 40 CFR 63.803(h)(5).

(e) Copies of documentation such as logs developed to demonstrate that the other provisions of the work practice implementation plan are followed.

(5) Monitoring records for VOC emission control systems.

For any VOC emission control system subject to paragraph (H) of this rule, the owner or operator shall maintain monitoring records as follows:

(a) Where a thermal oxidizer is employed:

(i) Continuous records of the firebox temperature.

(ii) Records of all three-hour block averages of the firebox temperature during operation of the finishing operation.

(iii) A record of the operating limit established under paragraph (J)(2) of this rule.

(iv) Records of the times and durations of all periods during process or control operation when the monitoring device is not working.

(b) Where a catalytic oxidizer is employed:

(i) Continuous records of the temperature upstream and the temperature difference across the catalyst bed.

(ii) Records of three-hour block averages of the temperature upstream and the temperature difference across the catalyst bed during operation of the finishing operation.

(iii) A record of the operating limits established under paragraph (J)(2) of this rule.

(iv) Records of the times and durations of all periods during process or control operation when the monitoring device is not working.

(c) Where a regenerative carbon adsorber is employed.

(i) A record of the total regenerative steam mass or volumetric flow for each carbon bed regeneration cycle.

(ii) Record of the temperature of the carbon bed after each regeneration cycle [and within fifteen minutes of completing any cooling cycle(s)].

(iii) A record of the operating limits established under paragraph (J)(2) of this rule.

(iv) Records of the times and durations of all periods during process or control operation when either monitoring device is not working.

(d) Where a concentrator is employed:

(i) Continuous records of the temperature of the desorption concentrate stream and the pressure drop of the dilute stream across the concentrator.

(ii) Records of all three-hour block averages of the temperature of the desorption concentrate stream during operation of the finishing operation.

(iii) Records of all three-hour block averages of the pressure drop of the dilute stream across the concentrator during operation of the finishing operation.

(iv) A record of the operating limits established under paragraph (J)(2) of this rule.

(v) Records of the times and durations of all periods during process or control operation when either monitoring device is not working.

(e) Where an organic monitoring device is employed for monitoring the concentration level at the outlet of control device:

(i) Continuous records of the concentration level of the outlet of the control device.

(ii) Records of all three-hour block averages of the concentration level during operation of the finishing operation.

(iii) A record of the operating limit established under paragraph (J)(2) of this rule.

(iv) Records of the times and durations of all periods during process or control operation when the monitoring device is not working.

(f) For any capture system bypass line that could divert flow (i.e., VOC emissions) away from the control device to the atmosphere, the owner or operator shall maintain the monitoring records specified in paragraphs (K)(5)(f)(i) to (K)(5)(f)(iii) of this rule, whichever is applicable.

(i) Where a flow indicator control position indicator, valve closure monitoring system, or flow direction indicator is employed to monitor the bypass line:

(a) Hourly records of whether the monitoring device was operating and whether a diversion of flow (VOC emissions) to the atmosphere was detected at any time during the hour.

(b) A record indicating that a monthly inspection of the monitoring device, if required under this rule, has been done.

(c) Records of the times and durations of all periods when the monitoring device is not operating or flow (VOC emissions) is diverted to the atmosphere.

(ii) Where a car-seal or a lock-and-key type configuration is employed to secure the bypass line valve in the non-diverting position:

(a) A record indicating that a monthly visual inspection of the seal or closure mechanism has been done.

(b) Records of the times and durations of all periods when the seal mechanism is broken, the bypass line valve position has changed, the serial number of the broken car-seal has changed, or when the key to unlock the bypass line valve has been checked out.

(iii) Where an automatic shutdown system is employed, a record indicating that a monthly inspection of the system has been done.

(g) For monthly (or more frequent) inspections of the VOC emission control system and monitoring equipment conducted pursuant to paragraph (H)(12) of this rule, a record of the results of each inspection.

(L) Reporting.

(1) (General) The provisions under paragraph (L) of this rule describe the contents of reports and identify the reporting dates for the following reports:

(a) Initial compliance status report.

(b) Semiannual compliance status reports.

(2) Initial compliance status report.

The owner or operator of a wood furniture manufacturing operation subject to this rule shall submit an initial compliance status report within sixty calendar days after the compliance date specified in paragraph (G) of this rule as follows:

(a) For any finishing operation subject to paragraph (D) of this rule, the owner or operator shall state in the initial compliance status report which paragraph of paragraphs (D)(1) to (D)(5) of this rule is elected to be met.

(b) For any topcoat or sealer that is subject to the VOC content limit of paragraph (D)(1), (D)(2), (D)(4)(b), or (D)(5)(b) of this rule and that complies by the procedures of paragraphs (I)(1) to (I)(4) of this rule, the owner or operator shall state in the initial compliance status report that compliant coatings for the topcoats and sealers, as applicable, are being used.

(c) For any topcoat or sealer that is applied by means of a continuous coater, that is subject to the VOC content limit of paragraph (D)(1), (D)(2), (D)(4)(b), or (D)(5)(b) of this rule, and that complies by the procedures of paragraph (I)(5) of this rule, the owner or operator shall state in the initial compliance status report:

(i) That compliant coatings are being used, as determined by the procedures of paragraph (I)(5)(a) of this rule for VOC content for a continuous coater; or

(ii) That compliant coatings are being used, as determined by the procedures of paragraph (I)(5)(b) of this rule for VOC content and viscosity measurements for a continuous coater; and shall submit data that demonstrates the correlation between the viscosity of the finishing material and the VOC content of the finishing material in the reservoir; or,

(iii) That compliant coatings are being used, as determined by the procedures of paragraph (I)(5)(c) of this rule for the rolling thirty-day average VOC content for a dip coater.

(d) For any finishing operation that is equipped with a VOC emission control system to comply with paragraph (D)(3) of this rule, the owner or operator shall submit in the initial compliance status report:

(i) Information on designated topcoats and sealers to be controlled and the data recorded pursuant to paragraph (I)(6) of this rule that demonstrate the required overall control efficiency for each topcoat and sealer to be controlled.

(ii) Identification and description of each monitoring device employed to comply with the requirements of paragraph (H) of this rule.

(iii) The results of compliance tests conducted pursuant to paragraph (J) of this rule to determine the overall control efficiency of the VOC emission control system and the control efficiency of any thermal or catalytic oxidizer within the VOC emission control system.

(iv) A complete test report for any compliance tests of the VOC emission control system.

A complete test report shall include a brief process description, sampling site description, description of sampling and analysis procedures and any modifications to standard procedures, quality assurance procedures, record of operating conditions during the test, record of preparation of standards, record of calibrations, raw data sheets for field sampling, raw data sheets for field and laboratory analyses, documentation of calculations, and any other information required by the test method.

(v) For any compliance tests of the VOC emission control system, the compliance test monitoring data recorded pursuant to paragraph (J)(2) of this rule, including the operating parameter values established for any monitoring device.

(e) For any finishing operation that is equipped with a VOC emission control system to comply with paragraph (D)(4)(a) or (D)(5)(a) of this rule, the owner or operator shall submit in the initial compliance status report the information specified under paragraphs (L)(2)(d)(ii) to (L)(2)(d)(iv) of this rule.

(f) For any wood furniture manufacturing operation subject to paragraph (E) of this rule, the owner or operator shall state in the initial compliance status report that compliant coatings for strippable spray booth materials are being used.

(g) For wood furniture manufacturing operations subject to the work practice requirements of paragraph (F) of this rule, the owner or operator shall state in the initial compliance status report that the work practice implementation plan has been developed and that procedures have been established for implementing the provisions of the plan.

(3) Semiannual compliance status reports.

The owner or operator of a wood furniture manufacturing operation subject to this rule shall submit semiannual compliance status reports no later than thirty calendar days after the end of each six-month period to the Ohio EPA or its delegated local air agency. The first report shall be submitted no later than thirty calendar days after the end of the first six-month period following the compliance date. Subsequent reports shall be submitted no later than thirty calendar days after the end of each six-month period following the first report or no later than thirty calendar days after the end of each six-month period otherwise established within a permit issued for the wood furniture manufacturing operation. For each semiannual compliance status report, the owner or operator shall submit the following information for the six-month period covered by the report:

(a) For any finishing operation subject to paragraph (D) of this rule, the owner or operator shall state in the semiannual compliance status report any changes to the previous reporting of which paragraph of paragraphs (D)(1) to (D)(5) of this rule is elected to be met.

(b) For any topcoat or sealer that is applied by means of a continuous coater, any changes to the means of compliance previously reported. If the change pertains to the use of the procedures of paragraph (I)(5)(b) of this rule for the VOC content and viscosity measurements of a continuous coater, the

owner or operator shall submit data that demonstrates the correlation between the viscosity of the finishing material and the VOC content of the finishing material in the reservoir.

(c) For any VOC emission control system employed to met paragraph (D)(3), (D)(4)(a), or (D)(5)(a) of this rule, any changes to monitoring devices previously reported and required under paragraph (H) of this rule.

(d) If any subsequent compliance tests of the VOC emission control system are conducted during the semiannual reporting period after the initial compliance status report has been submitted, the semiannual compliance status report shall include the results of each compliance test, a complete test report, and the compliance test monitoring data as described under paragraphs (L)(2)(d)(ii) to (L)(2)(d)(iv) of this rule.

(e) Compliance certification for semiannual reporting period.

The owner or operator shall submit with the semiannual compliance status report, the following compliance certifications, where applicable:

(i) For any topcoat or sealer that is subject to the VOC content limit of paragraph (D)(1), (D)(2), (D)(4)(b), or (D)(5)(b) of this rule and that complies by the procedures of paragraphs (I)(1) to (I)(4) of this rule, the compliance certification shall state that compliant coatings for topcoats and sealers, as applicable, have been used each operating day in the semiannual reporting period, or should otherwise identify the periods of use of noncompliant coatings for topcoats and sealers, as applicable, the reasons for the use of noncompliant coatings, and the amounts and VOC contents of each noncompliant coating used. Use of a noncompliant coating is a separate violation for each day the noncompliant coating is used.

(ii) For any topcoat or sealer that is applied by means of a continuous coater, that is subject to the VOC content limit of paragraph (D)(1), (D)(2), (D)(4)(b), or (D)(5)(b) of this rule, and that complies by the procedures of paragraph (I)(5) of this rule, the compliance certification shall state the following, whichever is applicable:

(a) ((Compliance by VOC content for a continuous coater) The compliance certification shall state that compliant coatings, as determined by the procedures of paragraph (I)(5)(a) of this rule, have been used each operating day in the semiannual reporting period, or should otherwise identify the periods of use of noncompliant coatings, the reasons for the use of noncompliant coatings, and the amounts and VOC contents of each noncompliant

coating used. Use of a noncompliant coating is a separate violation for each day the noncompliant coating is used

(b) ((Compliance by VOC content and viscosity measurements for a continuous coater) The compliance certification shall state that compliant coatings, as determined by the procedures of paragraph (I)(5)(b) of this rule, have been used each operating day in the semiannual reporting period, or should otherwise identify the periods of use of noncompliant coatings, the reasons for the use of noncompliant coatings, and the amounts and VOC contents of each noncompliant coating used. Additionally, the certification shall state that the viscosity of the finishing material in the reservoir has not been less than the viscosity of the initial finishing material, that is, the material that is initially mixed and placed in the reservoir, for any day in the semiannual reporting period. Use of a noncompliant coating is a separate violation for each day the noncompliant coating is used.

(c) (Compliance by rolling thirty-day average VOC content for a dip coater) The compliance certification shall state that compliant coatings, as determined by the procedures of paragraph (I)(5)(c) of this rule, have been used each operating day in the semiannual reporting period, or should otherwise identify the periods of use of noncompliant coatings, the reasons for the use of noncompliant coatings, and the amounts and VOC contents of each noncompliant coating used. Use of a noncompliant coating is a separate violation for each day the noncompliant coating is used.

(iii) For any finishing operation that is equipped with a VOC emission control system to comply with paragraph (D)(3) of this rule:

(a) The compliance certification shall state that the three-hour block averages of the monitoring parameters recorded pursuant to paragraph (K)(5) of this rule had complied with the operating limits (operating parameter values) for the monitoring parameters established under paragraph (J)(2) of this rule during of all periods of operation of the finishing operation; or should otherwise identify the times and durations of all periods of noncompliance and the reasons for noncompliance.

(b) The compliance certification shall identify the times and durations of all periods during process or control operation when the monitoring device is not working, as recorded pursuant to paragraph (K)(5) of this rule.

(c) For any capture system bypass line, the compliance certification shall identify the times and durations of all periods in which the captured VOC emissions were discharged to atmosphere instead of a control device, as recorded pursuant to paragraph (K)(5)(f) of this rule and the reasons for the discharges to atmosphere.

(d) The compliance certification shall state that the overall reduction of VOC emissions, based on the most recent compliance test conducted in accordance with paragraph (J) of this rule, has met the overall reduction of VOC emissions required under paragraph (D)(3) of this rule for each topcoat and sealer designated for control during the semiannual reporting period, or should otherwise identify the periods of noncompliance and the reasons for noncompliance.

(iv) For any finishing operation that is equipped with a VOC emission control system to comply with paragraph (D)(4)(a) or (D)(5)(a) of this rule, the compliance certification shall contain the information specified under paragraphs (L)(3)(e)(iii)(a) to (L)(3)(e)(iii)(c) of this rule.

(v) For finishing operations that are subject to the daily VOC emissions limit under paragraph (D)(4) or (D)(5) of this rule, the compliance certification shall state that the daily actual VOC emissions did not exceed the daily VOC emissions limit for the finishing materials selected for inclusion in the daily VOC emissions limit for each operating day during the semiannual reporting period, or should otherwise identify for each day of noncompliance the daily actual VOC emissions, the daily VOC emissions limit, the finishing materials selected for inclusion in the daily VOC emissions limit, and the reasons for noncompliance.

(vi) For any wood furniture manufacturing operation subject to paragraph (E) of this rule for strippable spray booth materials, the compliance certification shall state that compliant coatings for strippable spray booth materials have been used each day in the semiannual reporting period, or should otherwise identify each day noncompliant coatings for strippable spray booth materials were used., the reasons for the use of noncompliant coatings, and the amounts and VOC contents of each noncompliant coating used. Use of a noncompliant coating is a separate violation for each day the noncompliant coating is used

(vii) For wood furniture manufacturing operations subject to the work practice requirements of paragraph (F) of this rule, the compliance certification shall state that the work practice implementation plan is being followed, or should otherwise identify the provisions of the plan

that have not been implemented and each day the provisions were not implemented.

(viii) The compliance certification shall identify and describe any corrective actions considered and implemented for any noncompliance being reported in the compliance certification.

(ix) The compliance certification shall be signed by a responsible official of the company that owns or operates the wood furniture manufacturing operations.

(M) Special provisions for owners or operators electing to use emissions averaging.

(1) The owner or operator of wood furniture manufacturing operations electing to comply with the daily VOC emissions limit in paragraph (D)(4) or (D)(5) of this rule shall submit to the director for approval a plan addressing the following provisions:

(a) Program goals and rationale as follows:

(i) Provide a summary of the reasons why the owner or operator of wood furniture manufacturing operations would like to comply with the VOC emission limitations through the procedures established in paragraph (D)(4) or (D)(5) of this rule.

(ii) Provide a summary of how averaging can be used to meet the VOC emission limitations.

(iii) Document that the additional environmental benefit requirement is being met through the use of the equations in paragraph (D)(4) or (D)(5) of this rule. These equations ensure that the wood furniture manufacturing operations achieve an additional ten per cent reduction in emissions when compared to wood furniture manufacturing operations using a compliant coatings approach to meet the requirements of the rule.

(b) Program scope as follows:

(i) Include the types of finishing materials that will be included in the wood furniture manufacturing operations' averaging program.

(ii) Stains, basecoats, washcoats, sealers, and topcoats may be used in the averaging program.

(iii) Finishing materials that are applied using continuous coaters may only be used in an averaging program if the owner or operator of the wood

furniture manufacturing operations can determine the amount of finishing material used each day.

(c) For program baseline, each finishing material included in the averaging program shall be the lower of the actual or allowable emission rate as of the effective date of this rule.

(d) Quantification procedures as follows:

(i) Describe how emissions and changes in emissions will be quantified, including methods for quantifying usage of each finishing material. Quantification procedures for VOC content are included in paragraph (I) of this rule.

(ii) Quantification methods used shall be accurate enough to ensure that the wood furniture manufacturing operations' actual emissions are less than the allowable emissions, as calculated using the equations in paragraph (D)(4) or (D)(5) of this rule, on a daily basis.

(e) Monitoring, record keeping, and reporting as follows:

(i) Provide a summary of the monitoring, record keeping, and reporting procedures that will be used to demonstrate daily compliance with the equations presented in paragraph (D)(4) or (D)(5) of this rule.

(ii) Monitoring, record keeping, and reporting procedures shall be structured in such a way that the Ohio EPA or its delegated local air agency and owners or operators of the wood furniture manufacturing operations can determine compliance status for any day.

(2) Pending approval by the director and the USEPA of the proposed emissions averaging plan, the owner or operator shall continue to comply with the requirements of this rule.

(N) Requirements on applicability notification and permit application.

(1) The owner or operator of a facility that is subject to this rule, is located in Butler, Clermont, Hamilton, or Warren county, and has an initial startup of wood furniture manufacturing operations before May 27, 2005 shall notify the appropriate Ohio environmental protection agency district office or local air agency in writing that the facility is subject to this rule. The notification, which shall be submitted not later than July 26, 2005, shall provide the information specified in paragraph (N)(5) of this rule.

(2) The owner or operator of a facility that is subject to this rule, is located in Butler, Clermont, Hamilton, or Warren county, and has an initial startup of wood

furniture manufacturing operations on or after May 27, 2005 shall notify the appropriate Ohio environmental protection agency district office or local air agency in writing that the facility is subject to this rule. The notification, which shall be submitted not later than either the date of initial startup of the facility or July 26, 2005 (whichever is later), shall provide the information specified in paragraph (N)(5) of this rule. The application for a permit-to-install under rule 3745-31-02 of the Administrative Code may be used to fulfill the notification requirements of this paragraph.

(3) The owner or operator of a facility that is subject to this rule, is located in Ashtabula, Cuyahoga, Geauga, Lake, Lorain, Medina, Portage, or Summit county, and has an initial startup of wood furniture manufacturing operations before the effective date of this rule shall notify the appropriate Ohio environmental protection agency district office or local air agency in writing that the facility is subject to this rule. The notification, which shall be submitted not later than sixty days after the effective date of this rule, shall provide the information specified in paragraph (N)(5) of this rule.

(4) The owner or operator of a facility that is subject to this rule, is located in Ashtabula, Cuyahoga, Geauga, Lake, Lorain, Medina, Portage, or Summit county, and has an initial startup of wood furniture manufacturing operations on or after the effective date of this rule shall notify the Ohio EPA or its delegated local air agency in writing that the facility is subject to this rule. The notification, which shall be submitted not later than either the date of initial startup of the facility or sixty days after the effective date of this rule (whichever is later), shall provide the information specified in paragraph (N)(5) of this rule. The application for a permit-to-install under rule 3745-31-02 of the Administrative Code may be used to fulfill the notification requirements of this paragraph.

(5) The notification required in paragraphs (N)(1) to (N)(4) of this rule shall include the following information:

(a) Name and address of the owner or operator;

(b) Address (i.e., physical location) of the facility;

(c) Equipment description and Ohio EPA application number (if assigned) of any wood furniture manufacturing operations;

(d) Identification of the applicable requirements, the means of compliance, and the compliance date for the wood furniture manufacturing operations under this rule;

(e) Regarding a permit for wood furniture manufacturing operations, whichever of the following is applicable:

(i) Submission of an application for a permit-to-operate, modification, or renewal of a permit to operate in accordance with paragraph (B) of rule 3745-35-02 of the Administrative Code; or

(ii) Statement of intent to submit an application for a Title V permit or modification of a Title V permit in accordance with rule 3745-77-02 or rule 3745-77-08 of the Administrative Code, respectively.

Effective: 08/25/2008

R.C. 119.032 review dates: 02/21/2008 and 08/25/2013

CERTIFIED ELECTRONICALLY
Certification

08/15/2008
Date

Promulgated Under: 119.03
Statutory Authority: 3704.03(E)
Rule Amplifies: 3704.03(E), 3704.03(A)
Prior Effective Dates: 5/27/2005

3745-21-16 **Control of volatile organic compound emissions from industrial wastewater.**

[Comment: For dates and availability of non-regulatory government publications, publications of recognized organizations and associations, federal rules, and federal statutory provisions referenced in this rule, see paragraph (HH) of rule 3745-21-01 of the Administrative Code entitled "Referenced materials."]

(A) Applicability.

(1) Except as otherwise provided in paragraphs (A)(4) and (A)(5) of this rule, the requirements of paragraph (C) of this rule shall apply to any facility that generates process wastewater from an affected industrial category and meets either the following criteria in paragraphs (A)(1)(a) and (A)(1)(b) of this rule or paragraphs (A)(1)(c) and (A)(1)(d) of this rule:

(a) The facility is located in Butler, Clermont, Hamilton or Warren county; and

(b) The facility has a combined total potential to emit for VOC emissions equal to or greater than one hundred tons of VOC per calendar year on or after May 27, 2005 from all of the following:

(i) Industrial wastewater sources (waste management units);

(ii) All non-CTG sources; and

(iii) Unregulated emissions from CTG sources except sources regulated under Subparts BBB, III, NNN, and RRR of 40 CFR Part 60 and sources regulated under Subpart T of 40 CFR Part 63.

(c) The facility is located in Ashtabula, Cuyahoga, Geauga, Lake, Lorain, Medina, Portage, or Summit county; and

(d) The facility has a combined total potential to emit for VOC emissions equal to or greater than one hundred tons of VOC per calendar year on or after August 25, 2008 from all of the following:

(i) Industrial wastewater sources (waste management units);

(ii) All non-CTG sources; and

(iii) Unregulated emissions from CTG sources except sources regulated under Subparts BBB, III, NNN, and RRR of 40 CFR Part 60 and sources regulated under Subpart T of 40 CFR Part 63.

(2) For the purposes of paragraphs (A)(1)(a) to (A)(1)(d) of this rule, a source shall be considered regulated by a paragraph, rule or subpart if it is subject to the limits of that paragraph, rule, or subpart. A source is not considered regulated by a paragraph, rule, or subpart if it is not subject to the limits of that paragraph, rule, or subpart. For example, if the source is covered by an exemption in the paragraph, rule, or subpart, or the applicability criteria of the paragraph or subpart are not met, then the source is not subject to that paragraph, rule, or subpart. A source is also not considered regulated if there is no rule contained in this chapter regulating the source category.

(3) Once a facility has met the applicability requirements of paragraphs (A)(1)(a) and (A)(1)(b) of this rule on or after May 27, 2005, or the applicability requirements of paragraphs (A)(1)(c) and (A)(1)(d) of this rule on or after the effective date of this rule, it is always subject to the requirements of paragraph (C) of this rule, except as otherwise provided in paragraphs (A)(4) and (A)(5) of this rule.

(4) In the event a facility meets the applicability requirements under paragraphs (A)(1)(a) and (A)(1)(b) of this rule, but reduces its potential to emit for volatile organic compounds by means of federally enforceable operational restrictions (e.g., production, hours of operation, or capacity utilization) to less than one hundred tons per year by no later than May 27, 2006 and documents that the actual VOC emissions from the above combined sources have never exceeded one hundred tons per year after the baseline year (1990) of the state implementation plan for ozone, the facility is not subject to the requirements of paragraph (C) of this rule.

(5) In the event a facility meets the applicability requirements under paragraphs (A)(1)(c) and (A)(1)(d) of this rule, but reduces its potential to emit for VOCs by means of a federally enforceable operational restriction(s) (e.g., production, hours of operation, or capacity utilization) to less than one hundred tons per year by no later than twelve months after the effective date of this rule and documents that the actual VOC emissions from the above combined sources have never exceeded one hundred tons per year after the baseline year (2002) of the state implementation plan for ozone, the facility is not subject to the requirements of paragraph (C) of this rule.

(B) Definitions.

The definitions applicable to this rule are contained in paragraph (Y) of rule 3745-21-01 of the Administrative Code.

(C) Overall requirements for industrial wastewater.

(1) Except as otherwise exempted under paragraph (C)(2) of this rule, the owner or operator of an affected industrial category at a facility that meets the

applicability criteria of paragraph (A) of this rule shall comply with the requirements of paragraphs (D) to (L) of this rule.

(2) The following exemptions shall apply:

(a) Any plant with an annual affected VOCs loading in wastewater, as determined in accordance with paragraph (I) of this rule (relating to determination of wastewater characteristics), less than or equal to ten megagrams (11.03 tons) is exempt from the control requirements of paragraph (D) of this rule.

(b) At any plant with an annual affected VOC loading in wastewater, as determined in accordance with paragraph (I) of this rule, greater than ten megagrams (11.03 tons), the owner or operator of the plant may exempt from the control requirements of paragraph (D) of this rule one or more affected VOC wastewater streams for which the sum of the annual VOC loading in wastewater for all of the exempted streams is less than or equal to ten megagrams (11.03 tons).

(c) If compliance with the control requirements of paragraph (D) of this rule would create a safety hazard in a waste management unit, the owner or operator may request the USEPA to exempt that waste management unit from the control requirements of paragraph (D) of this rule. The USEPA shall approve the request if justified by the likelihood and magnitude of the potential injury and if the USEPA determines that reducing or eliminating the hazard is technologically or economically unreasonable. Such approval shall occur when the Ohio environmental protection agency is informed, in writing, that USEPA has no objections to this exemption.

(d) Wet weather retention basins are exempt from the requirements of this rule.

(D) Control requirements for process wastewater.

(1) The owner or operator of a facility with an affected industrial category shall comply with the following control requirements. Any waste management unit that receives, manages, or treats an affected VOC wastewater stream or affected residual shall be controlled in accordance with paragraph (D)(2) of this rule or with one of the alternate methods of control listed in paragraph (E) of this rule.

(2) The owner or operator of a facility with an affected industrial category shall comply with the following control requirements. Any waste management unit that receives, manages, or treats an affected VOC wastewater stream or an affected residual shall be controlled in accordance with paragraphs (D)(3) to (D)(8) of this rule. The control requirements apply from the point of generation of an affected VOC wastewater stream until the affected VOC wastewater

stream, including any affected residual, is either returned to a process unit or treated in accordance with paragraph (D)(8) of this rule.

(3) For each individual drain system that receives or manages an affected VOC wastewater stream or an affected residual, the owner or operator shall comply with the requirements of paragraph (D)(3)(a) or (D)(3)(b) of this rule.

(a) The owner or operator shall operate and maintain on each opening in the individual drain system a cover and if vented, route the vapors to a process or through a closed vent system to a control device as follows:

(i) The cover and all openings shall be maintained in a closed position at all times that an affected VOC wastewater stream or an affected residual is in the drain system except when it is necessary to use the opening for sampling or removal, or for equipment inspection, maintenance, or repair.

(ii) The control device shall be designed and operated to reduce the affected VOC vented to it by at least ninety per cent by weight.

(iii) The individual drain system shall be designed and operated to segregate the vapors within the system from other drain systems and the atmosphere.

(b) The owner or operator shall comply with the requirements of paragraphs (D)(3)(b)(i) to (D)(3)(b)(v) of this rule.

(i) Each drain shall be equipped with water seal controls or a tightly fitting cap or plug.

(ii) If a water seal is used on a drain receiving an affected VOC wastewater stream or an affected residual, the owner or operator shall either extend the pipe discharging the wastewater below the liquid surface in the water seal of the receiving drain, or install a flexible shield (or other enclosure which restricts wind motion across the open area between the pipe and the drain) that encloses the space between the pipe discharging the wastewater to the drain receiving the wastewater. (A water seal which is used on a hub receiving a wastewater stream that is not an affected VOC wastewater stream or an affected residual for the purpose of eliminating cross ventilation to drains carrying an affected VOC wastewater stream or an affected residual is not required to have an extended subsurface discharging pipe or a flexible shield.)

(iii) Each junction box shall be equipped with a tightly fitting solid cover (i.e., no visible gaps, cracks, or holes) which shall be kept in place at all times except during inspection and maintenance.

(iv) If the junction box is vented, the owner or operator shall comply with one of the following requirements:

(a) The junction box shall be vented to a process or through a closed vent system to a control device that is designed and operated to reduce the VOC vented to it by at least ninety per cent by weight.

(b) If the junction box is filled and emptied by gravity flow (i.e., there is no pump) or is operated with no more than slight fluctuations in the liquid level, the owner or operator may vent the junction box to the atmosphere provided that the junction box complies with the following requirements:

(i) The vent pipe shall be at least ninety centimeters in length and no greater than 10.2 centimeters in nominal inside diameter.

(ii) Water seals shall be installed and maintained at the wastewater entrance(s) to or exit from the junction box restricting ventilation in the individual drain system and between components in the individual drain system.

(v) Each sewer line shall not be open to the atmosphere and shall be covered or enclosed in a manner so as to have no visible gaps or cracks in joints, seals, or other emission interfaces.

(4) For each surface impoundment that receives, manages, or treats an affected VOC wastewater stream or an affected residual, the owner or operator shall comply with the requirements of paragraph (D)(4)(a) or (D)(4)(b) of this rule.

(a) The surface impoundment shall be equipped with a cover (e.g., air-supported structure or rigid cover) and a closed-vent system which routes the VOC vapors vented from the surface impoundment to a control device that meet the following requirements:

(i) Each opening (e.g., access hatch, sampling port, and gauge well) shall be maintained in a closed position (e.g., covered by a lid) at all times that an affected VOC wastewater stream or an affected residual is in the surface impoundment except when it is necessary to use the opening for sampling, removal, or for equipment inspection, maintenance, or repair.

(ii) The cover shall be used at all times that an affected VOC wastewater stream or an affected residual is in the surface impoundment except during removal of treatment residuals in accordance with 40 CFR 268.4 or closure of the surface impoundment in accordance with 40 CFR 264.228.

(iii) The control device shall be designed and operated to reduce the affected VOC vented to it by at least ninety per cent by weight.

(b) The surface impoundment shall be equipped with a floating flexible membrane cover that meets the requirements specified in paragraphs (D)(4)(b)(2)(i) to (D)(4)(b)(2)(vii) of this rule.

(i) The flexible membrane cover shall be designed to float on the liquid surface during normal operations, and to form a continuous barrier over the entire surface area of the liquid.

(ii) The flexible membrane cover shall be fabricated from a synthetic membrane material that is either a high density polyethylene with a thickness no less than 2.5 millimeters (one hundred mils) or a material (or a composite of different materials) determined to have both organic permeability properties that are equivalent to those of the high density polyethylene material and chemical and physical properties that maintain the material integrity for the intended service life of the material.

(iii) The flexible membrane cover shall be installed in a manner such that there are no visible cracks, holes, gaps, or other open spaces between cover section seams or between the interface of the cover edge and its foundation mountings.

(iv) Except as provided for in paragraph (D)(4)(b)(2)(v) of this rule, each opening in the flexible membrane cover shall be equipped with a closure device designed to operate such that when the closure device is secured in the closed position there are no visible cracks, holes, gaps, or other open spaces in the closure device or between the perimeter of the cover opening and the closure device.

(v) The flexible membrane cover may be equipped with one or more emergency cover drains for removal of stormwater. Each emergency cover drain shall be equipped with a slotted membrane fabric cover that covers at least ninety per cent of the area of the opening or a flexible fabric sleeve seal.

(vi) Whenever an affected VOC wastewater stream or an affected residual is in the surface impoundment, the flexible membrane cover shall float on the liquid and each closure device shall be secured in the closed position. Opening of closure devices or removal of the flexible membrane cover is allowed to provide access to the surface impoundment for performing routine inspection, maintenance, or other

activities needed for normal operations and/or to remove accumulated sludge or other residues from the bottom of the surface impoundment.

(5) For each oil-water separator that receives, manages, or treats an affected VOC wastewater stream or an affected residual, the owner or operator shall comply with the requirements of paragraph (D)(5)(a) or (D)(5)(b) of this rule.

(a) The oil-water separator shall be equipped with a fixed roof and a closed vent system that routes the vapors vented from the oil-water separator to a control device in accordance with following requirements:

(i) Each opening in the fixed roof (e.g., access hatches, sampling ports, and gauge wells) shall be maintained in a closed, sealed position (e.g., covered by a lid that is gasketed and latched) at all times that the oil-water separator contains an affected VOC wastewater stream or an affected residual except when it is necessary to use the opening for sampling or removal, or for equipment inspection, maintenance, or repair.

(ii) The control device shall be designed and operated to reduce the VOC vented to it by at least ninety per cent by weight.

(b) The oil-water separator shall be equipped with a floating roof in accordance with the requirements of paragraphs (D)(5)(b)(i) to (D)(5)(b)(v) of this rule.

(i) The oil-water separator shall be equipped with a floating roof that has a closure device between the floating roof and the wall of the separator. For portions of the oil-water separator where it is infeasible to construct and operate a floating roof, such as over the weir mechanism, the owner or operator shall operate and maintain a fixed roof, closed vent system, and control device that meet the requirements specified in paragraph (D)(5)(a) of this rule.

(ii) The closure device shall consist of a primary seal and a secondary seal. The primary seal shall be a liquid-mounted seal or a mechanical shoe seal. The secondary seal shall be above the floating roof and cover the annular space between the floating roof and the wall of the separator.

(iii) The floating roof shall be floating on the liquid (i.e., off the roof supports) at all times except during abnormal conditions (i.e., low flow rate).

(iv) Except as provided for in paragraph (D)(5)(b)(v) of this rule, each opening in the floating roof shall be equipped with a gasketed cover, seal or lid, which shall be maintained in the closed position at all times, except during inspection and maintenance.

(v) The floating roof may be equipped with one or more emergency cover drains for removal of stormwater. Each emergency cover drain shall be equipped with a slotted membrane fabric cover that covers at least ninety per cent of the area of the opening or a flexible fabric sleeve seal.

(6) For each portable container that receives, manages, or treats an affected VOC wastewater stream or an affected residual, the owner or operator shall operate and maintain a cover on the portable container and shall comply with the requirements of paragraphs (D)(6)(a) to (D)(6)(c) of this rule.

(a) The cover shall remain in place and all openings (e.g., bungs, hatches, sampling ports, and pressure relief devices) shall be maintained in a closed position (e.g., covered by a lid) at all times that an affected VOC wastewater stream or an affected residual is in the portable container except when it is necessary to use the opening for filling, removal, inspection, sampling, or pressure relief events related to safety considerations to prevent physical damage or permanent deformation of the portable container or cover.

(b) For portable containers with a capacity greater than or equal to one hundred ten gallons, a submerged fill pipe shall be used when a container is being filled by pumping with an affected VOC wastewater stream or an affected residual. The submerged fill pipe outlet shall extend to no more than six inches or within two fill pipe diameters of the bottom of the container while the container is being filled.

(c) During treatment of an affected VOC wastewater stream or an affected residual, including aeration, thermal or other treatment, in a portable container, whenever it is necessary for the container to be open, the container shall be located within an enclosure with a closed-vent system that routes the VOC vapors vented from the container to a control device. The control device shall be designed and operated to reduce the VOC vented to it by at least ninety per cent by weight.

(7) For each wastewater tank that receives, manages, or treats an affected VOC wastewater stream or an affected residual, the owner or operator shall comply with the requirements of either paragraph (D)(7)(a) or (D)(7)(b) of this rule.

(a) The owner or operator shall operate and maintain a fixed roof for the wastewater tank, except that if the wastewater tank meets any of the conditions in paragraphs (D)(7)(a)(i) to (D)(7)(a)(iv) of this rule, the owner or operator shall operate and maintain one of the emission control techniques listed in paragraphs (D)(7)(b)(i) to (D)(7)(b)(iii) of this rule.

(i) Used for heating wastewater.

(ii) Used for treating by means of an exothermic reaction.

(iii) The contents of the tank is sparged.

(iv) The wastewater tank has a capacity equal to or greater than forty thousand gallons and the maximum vapor pressure stored material is equal to or greater than 1.5 pounds per square inch absolute.

(b) The owner or operator shall operate and maintain one of the emission control techniques listed in paragraphs (D)(7)(b)(i) to (D)(7)(b)(iv) of this rule.

(i) A fixed roof and a closed-vent system that routes the VOC vapors vented from the wastewater tank to a control device.

(a) Each opening in the fixed roof (e.g., access hatches, sampling ports, and gauge wells) shall be maintained in a closed position (e.g., covered by a lid) at all times that the wastewater tank contains an affected VOC wastewater stream or an affected residual except when it is necessary to use the opening for wastewater sampling, removal, or for equipment inspection, maintenance, or repair.

(b) The control device shall be designed and operated to reduce the VOC vented to it by at least ninety per cent by weight.

(ii) A fixed roof and an internal floating roof that meets the requirements specified in paragraphs (D)(7)(b)(ii)(a) to (D)(7)(b)(ii)(l) of this rule.

(a) The internal floating roof shall be floating on the liquid surface at all times except when the floating roof must be supported by the leg supports during initial fill, after the tank has been completely emptied and degassed, and when the tank is completely emptied before being subsequently refilled.

(b) When the floating roof is resting on the leg supports, the process of filling, emptying, or refilling shall be continuous and shall be accomplished as soon as practical.

(c) The internal floating roof shall be equipped with a closure device between the wall of the tank and the roof edge. The closure device shall consist of a liquid-mounted seal, or a metallic shoe seal, or two seals mounted one above the other so that each forms a continuous closure that completely covers the space between the wall of the storage vessel and the edge of the internal floating roof.

The lower seal may be vapor-mounted, but both must be continuous seals.

(d) Automatic bleeder vents are to be closed at all times when the roof is floating, except when the roof is being floated off or is being landed on the roof leg supports.

(e) Each opening in a noncontact internal floating roof except for automatic bleeder vents (vacuum breaker vents) and rim space vents is to provide a projection below the liquid surface.

(f) Each opening in the internal floating roof except for leg sleeves, automatic bleeder vents, rim space vents, column wells, ladder wells, sample wells, and stub drains shall be equipped with a cover or lid. The cover or lid shall be equipped with a gasket.

(g) Each penetration of the internal floating roof for the purposes of sampling shall be a sample well. Each sample well shall have a slit fabric cover that covers at least ninety per cent of the opening.

(h) Each automatic bleeder vent shall be gasketed.

(i) Each rim space vent shall be gasketed.

(j) Each penetration of the internal floating roof that allows for passage of a ladder shall have a gasketed sliding cover.

(k) Each penetration of the internal floating roof that allows for passage of a column supporting the fixed roof shall have a flexible fabric sleeve seal or a gasketed sliding cover.

(l) Each cover or lid on any opening in the internal floating roof shall be closed (i.e., no visible gaps), except when the cover or lid must be open for access. Covers on each access hatch and each gauge float well shall be bolted or fastened so as to be air-tight when they are closed. Rim space vents are to be set to open only when the internal floating roof is not floating or when the pressure beneath the rim seal exceeds the manufacturer's recommended setting.

(iii) An external floating roof that meets the requirements specified in paragraphs (D)(7)(b)(iii)(a) to (D)(7)(b)(iii)(o) of this rule.

(a) Each external floating roof shall be equipped with a closure device between the wall of the storage vessel and the roof edge. The closure device is to consist of two seals, one above the other. The lower seal (primary seal) shall be either a metallic shoe seal or a

liquid-mounted seal. The upper seal (secondary seal) shall be a rim-mounted or shoe-mounted seal.

(b) Except during inspections, both the primary seal and the secondary seal shall completely cover the annular space between the external floating roof and the wall of the storage vessel in a continuous fashion.

(c) Except for automatic bleeder vents (vacuum breaker vents) and rim space vents, each opening in the noncontact external floating roof shall provide a projection below the liquid surface.

(d) Except for automatic bleeder vents, rim space vents, roof drains, and leg sleeves, each opening in the roof is to be equipped with a gasketed cover, seal or lid which is to be maintained in a closed position (i.e., no visible gap) at all times except when the cover or lid must be open for access. Covers on each access hatch and each gauge float well shall be bolted or fastened so as to be air-tight when they are closed.

(e) Automatic bleeder vents are to be closed at all times when the roof is floating, except when the roof is being floated off or is being landed on the roof leg supports.

(f) Rim space vents are to be set to open only when the roof is being floated off the roof leg supports or when the pressure beneath the rim seal exceeds the manufacturer's recommended setting.

(g) Automatic bleeder vents and rim space vents are to be gasketed.

(h) Each roof drain that empties into the stored liquid is to be provided with a slotted membrane fabric cover that covers at least ninety per cent of the area of the opening.

(i) Each unslotted guide pole well shall have a gasketed sliding cover or a flexible fabric sleeve seal.

(j) Each unslotted guide pole shall have on the end of the pole a gasketed cap which is closed at all times except when gauging the liquid level or taking liquid samples.

(k) Each slotted guide pole well shall have a gasketed sliding cover or a flexible fabric sleeve seal.

(l) Each slotted guide pole shall have a gasketed float or other device which closes off the liquid surface from the atmosphere.

(m) Each gauge hatch/sample well shall have a gasketed cover which is closed at all times except when the hatch or well must be open for access.

(n) The external floating roof shall be floating on the liquid surface at all times except when the floating roof must be supported by the leg supports during the periods specified in paragraphs (D)(7)(b)(iii)(n)(i) to (D)(7)(b)(iii)(n)(iii) of this rule.

(i) During the initial fill.

(ii) After the tank has been completely emptied and degassed.

(iii) When the tank is completely emptied before being subsequently refilled.

(o) When the floating roof is resting on the leg supports, the process of filling, emptying, or refilling shall be continuous and shall be accomplished as soon as practical.

(8) For each treatment process managing an affected VOC wastewater stream or an affected residual, the owner or operator shall comply with the requirements as specified in paragraphs (D)(8)(a) to (D)(8)(g) of this rule. Once an affected VOC wastewater stream or an affected residual has been treated in accordance with the requirements of paragraphs (D)(8)(a) to (D)(8)(g) of this rule, it is no longer subject to the requirements of this rule.

(a) Each treatment process shall meet the applicable requirements of paragraphs (D)(3) to (D)(7) of this rule.

(b) Gases vented from a treatment process shall be routed by means of a closed vent system to a control device which is designed and operated to reduce the VOC vented to it by at least ninety per cent by weight. This requirement does not apply to any open biological treatment process that meets an alternative method of control under paragraph (E) of this rule. Vents from anaerobic biological treatment processes may be routed through hard-piping to a fuel gas system.

(c) For each of the affected VOC wastewater streams that are treated in a nonbiological treatment process (or a combination of nonbiological treatment processes), the owner or operator shall, by removal or destruction, reduce the mass flow rate of affected VOC by ninety per cent or more while reducing the affected VOC concentration to less than one thousand parts per million by weight. Dilution shall not be used to achieve compliance with this paragraph. This requirement is not applicable for wastewater of

residuals that comply with the requirements for RCRA treatment options specified in paragraph (D)(8)(f) of this rule.

(d) The owner or operator using a closed biological treatment process for at least one affected VOC wastewater stream shall reduce the mass flow rate for all affected VOC from all wastewater streams entering the biological treatment process by at least ninety per cent.

(e) (Design steam stripper option.) The owner or operator shall operate and maintain a steam stripper that meets all the requirements of paragraphs (D)(8)(e)(i) to (D)(8)(e)(vi) of this rule.

(i) Minimum active column height of five meters.

(ii) Countercurrent flow configuration with a minimum of ten actual trays.

(iii) Minimum steam flow rate of 0.04 kilograms of steam per liter of wastewater feed within the column.

(iv) Minimum wastewater feed temperature to the steam stripper of ninety-five degrees Celsius, or minimum column operating temperature of ninety-five degrees Celsius.

(v) Maximum liquid loading of sixty-seven thousand one hundred liters per hour per square meter.

(vi) Operate at nominal atmospheric pressure.

(f) (RCRA treatment options.) The owner or operator may elect to treat the affected VOC wastewater stream or affected residual in a unit identified in, and complying with, paragraph (D)(8)(f)(i), (D)(8)(f)(ii), or (D)(8)(f)(iii) of this rule.

(i) The affected VOC wastewater stream or affected residual is discharged to a hazardous waste incinerator for which the owner or operator has been issued a final permit under 40 CFR Part 270 and complies with the requirements of 40 CFR part 264, subpart O, or has certified compliance with the interim status requirements of 40 CFR part 265, subpart O.

(ii) The affected VOC wastewater stream or affected residual is discharged to a process heater or boiler burning hazardous waste for which the owner or operator:

(a) Has been issued a final permit under 40 CFR part 270 and complies with the requirements of 40 CFR part 266, subpart H; or

(b) Has certified compliance with the interim status requirements of 40 CFR part 266, subpart H.

(iii) The affected VOC wastewater stream or affected residual is discharged to an underground injection well for which the owner or operator has been issued a final permit under 40 CFR part 270 or 40 CFR part 144 and complies with the requirements of 40 CFR part 122. The owner or operator shall comply with all applicable requirements of this subpart prior to the point where the wastewater enters the underground portion of the injection well.

(g) (Affected residuals.) For each affected residual, the owner or operator shall control for air emissions by complying with paragraphs (D)(3) to (D)(7) of this rule and by complying with one of the provisions in paragraphs (D)(8)(g)(i) to (D)(8)(g)(iv) of this rule.

(i) Recycle the affected residual to a production process or sell the affected residual for the purpose of recycling. Once an affected residual is returned to a production process, the affected residual is no longer subject to this rule.

(ii) Return the affected residual to the treatment process.

(iii) Treat the affected residual to destroy the total combined mass flow rate of affected VOC by ninety-nine per cent or more in a nonbiological treatment process.

(iv) Comply with the requirements for RCRA treatment options specified in paragraph (D)(8)(f) of this rule.

(E) Alternate methods of control.

The following alternate methods of demonstrating and documenting continuous compliance with the applicable control requirements or exemption criteria in this rule may be utilized if approved by the USEPA. Such approval shall occur when the Ohio environmental protection agency is informed, in writing, that USEPA has no objections to the alternate method(s) of control.

(1) (Ninety per cent overall control option) As an alternative to the control requirements of paragraph (D) of this rule (relating to control requirements), the owner or operator of waste management units may elect to ensure that the overall control of VOC emissions at the facility from wastewater from affected source industries is at least ninety per cent less than the calendar year baseline emissions inventory for VOC emissions to the ambient air from process wastewater, provided that adequate documentation is submitted which supports

the accuracy of the calendar year baseline emission inventory and the following requirements are met.

(a) To qualify for the control option available under paragraph (E)(1) of this rule after the effective date of this rule, the owner or operator of a waste management unit for which a control plan was not previously submitted shall submit a control plan to the director and any local air pollution control program with jurisdiction which demonstrates that the overall control of VOC emissions at the facility from wastewater from affected industrial categories will be at least ninety per cent less than the calendar year baseline emissions inventory. Any control plan submitted after the effective date of this rule, must be approved by the USEPA in writing before the owner or operator may use the control option available under paragraph (E)(1) of this rule for compliance. At a minimum, the control plan shall include the applicable emissions unit identification; the facility premise number (PN); the calendar year calendar year baseline emission rates of VOC from wastewater from affected industrial categories (consistent with the calendar year baseline emissions inventory); a plot plan showing the location, the emissions unit identification, and PN associated with a waste management units; the VOC emission rates for the preceding calendar year; and an explanation of the recordkeeping procedure and calculations which will be used to demonstrate compliance. The VOC emission rates shall be calculated in a manner consistent with the calendar year baseline emissions inventory.

(b) The owner or operator shall submit an annual report no later than March thirty-first of each year to the director and the local air pollution control program with jurisdiction, which demonstrates that the overall control of VOC emissions at the account from wastewater from affected industrial categories during the preceding calendar year is at least ninety per cent less than the baseline emissions inventory. At a minimum, the report shall include the PN; the emissions unit identification; the throughput of wastewater from affected industrial categories; a plot plan showing the location; the emissions unit identification; and the premise number associated with waste management units; and the VOC emission rates for the preceding calendar year. The emission rates for the preceding calendar year shall be calculated in a manner consistent with the calendar year baseline emissions inventory.

(c) All representations in control plans and annual reports become enforceable conditions. It shall be unlawful for any person to vary from such representations if the variation will cause a change in the identity of the specific emission sources being controlled or the method of control of emissions unless the owner or operator submits a revised control plan to the director and the local air pollution control agency with jurisdiction no later than thirty days after the change. All control plans and reports shall include

documentation that the overall reduction of VOC emissions at the account from wastewater from affected source categories continues to be at least ninety per cent less than the calendar year baseline emissions inventory. The emission rates shall be calculated in a manner consistent with the calendar year baseline emissions inventory.

(d) For waste management units located in Butler, Clermont, Hamilton or Warren county, the calendar year baseline is 1990.

(e) For waste management units located in Ashtabula, Cuyahoga, Geauga, Lake, Lorain, Medina, Portage, or Summit county, the calendar year baseline is 2002.

(2) The owner or operator of an affected industrial category may elect to comply with the provisions of 40 CFR part 63, subpart G ("National Emission Standards for Hazardous Air Pollutants From the Synthetic Organic Chemical Manufacturing Industry for Process Vents, Storage Vessels, Transfer Operations, and Wastewater"), 40 CFR part 63, subpart JJJ ("National Emission Standards for Hazardous Air Pollutants: Group IV Polymers and Resins"), 40 CFR part 63, subpart FFFF ("National Emission Standards for Hazardous Air Pollutants: Miscellaneous Organic Chemical Manufacturing") or any other emission standard promulgated under 40 CFR part 63 that references the wastewater control requirements set forth in 40 CFR part 63, subpart G if the wastewater stream is subject to the national emission standards for hazardous air pollutants control requirements for that category, as alternatives to complying with this rule, provided that:

(a) The term "affected VOC" is substituted each place that 40 CFR part 63, subpart G, subpart JJJ, subpart FFFF and any other 40 CFR part 63 emission standard references the term "organic hazardous air pollutant" or "organic HAP";

(b) For affected VOC not specifically listed in table 9 of 40 CFR part 63, subpart G the corresponding fraction removed (Fr) value shall be determined as follows:

(i) Determine the Fr value by the procedures in 40 CFR part 60, appendix J as proposed on December 9, 1998 in the Federal Register; or

(ii) Assign an Fr value of 0.99; or

(iii) Use WATER9, a wastewater treatment model of USEPA, to determine the Fr value of a chemical.

(c) Before implementing the option available under paragraph (E)(2) of this rule, the owner or operator provides written notice of their intent to utilize this

option to the director and any local air pollution control program with jurisdiction of the intention to use this option.

(F) Inspection and monitoring.

The owner or operator of a waste management unit that is subject to requirements under paragraph (D) or (E) of this rule shall comply with the following inspection and monitoring requirements. An owner and operator choosing to comply with a subpart in 40 CFR part 63 in paragraph (E)(2) of this rule, provided it is subject to that subpart, may comply with the inspection monitoring and record keeping requirements of the subpart instead of the requirements in paragraph (F) of this rule.

(1) The owner or operator of a waste management unit that is subject to requirements under paragraph (D) or (E) of this rule shall comply with the following inspection and monitoring requirements. An owner and operator choosing to comply with a subpart in 40 CFR part 63 in paragraph (E)(2) of this rule, provided it is subject to that subpart, may comply with the inspection monitoring and record keeping requirements of the subpart instead of the requirements in paragraph (F) of this rule.

(2) All seals, covers, closed vent systems, and other equipment used to comply with paragraph (D) or (E) of this rule (relating to control requirements) shall be visually inspected for leaks and improper condition initially, semiannually, and upon repair as specified under paragraphs (F)(2)(a) to (F)(2)(k) of this rule. If any seal, cover, closed vent system, or other equipment is found to have a leak or improper condition, a first attempt at repair shall be completed as soon as possible, but no later than fifteen calendar days after detection, unless the repair or correction is technically infeasible without requiring a process unit shutdown, in which case the repair or correction shall be made at the next process unit shutdown.

(a) For a wastewater tank equipped with a fixed roof and vapor control system (closed vent system and control device), visually inspect the fixed roof, openings, and the closed vent system for leaks, except for a cover and closed vent system maintained under negative pressure.

(b) For a wastewater tank equipped with an internal or external floating roof, visually inspect for the following improper conditions:

(i) Leaving open any access door or other opening when such door or opening is not in use.

(ii) The floating roof is not resting on either the surface of the liquid or on the leg supports.

(iii) There is stored liquid on the floating roof.

(iv) A rim seal is detached from the floating roof.

(v) There are holes, tears, cracks or gaps in the rim seal or seal fabric of the floating roof.

(vi) There are visible gaps between the seal of an internal floating roof and the wall of the wastewater tank.

(vii) Where a metallic shoe seal is used on an external floating roof, one end of the metallic shoe does not extend into the stored liquid or one end of the metallic shoe does not extend a minimum vertical distance of sixty-one centimeters above the surface of the stored liquid.

(viii) A gasket, joint, lid, cover, or door has a crack or gap, or is broken.

(c) For a surface impoundment, visually inspect the cover and all openings for leaks, except for a cover and closed vent system maintained under negative pressure.

(d) For a surface impoundment, visually inspect the following improper conditions:

(i) Leaving open any access hatch or other opening when such hatch or opening is not in use.

(ii) A joint, lid, cover, or door has a crack or gap, or is broken.

(e) For a portable container, visually inspect the cover and all openings for leaks.

(f) For a portable container that is located within an enclosure that is vented by means of a closed vent system to a control device, visually inspect the enclosure and closed vent system for leaks, except for an enclosure and closed vent system maintained under negative pressure.

(g) For a portable container, visually inspect for the following improper conditions:

(i) Leaving open any access hatch or other opening when such hatch or opening is not in use.

(ii) A cover or door has a gap or crack, or is broken.

(h) For an individual drain systems, visually inspect for the following improper conditions:

(i) A joint, lid, cover, or door has a gap, crack, hole or is broken.

(ii) Leaving open any access hatch or other opening when such hatch or opening is not in use for sampling or removal, or for equipment inspection, maintenance, or repair.

(iii) Sufficient water is not present to properly maintain integrity of water seals.

(iv) Drains using tightly-fitted caps or plugs have caps and plugs that are not in place or not properly installed.

(v) Junction boxes do not have covers in place or covers have visible gaps, cracks, or holes.

(vi) Unburied portion of sewer lines have cracks or gaps.

(i) For a junction box vented to a process or through a closed vent system to a control device, visually inspect for leaks in the closed vent system.

(j) For oil-water separators, visually inspect fixed roof and all openings for leaks.

(k) Leaving open or ungasketed any access door or other opening when such door or opening is not in use.

(i) Leaving open or ungasketed any access door or other opening when such door or opening is not in use.

(ii) The floating roof is not resting on either the surface of the liquid or on the leg supports.

(iii) There is stored liquid on the floating roof.

(iv) A rim seal is detached from the floating roof.

(v) There are holes, tears, or other open spaces in the rim seal or seal fabric of the floating roof.

(vi) A gasket, joint, lid, cover, or door has a gap or crack, or is broken.

(3) For a wastewater tank or oil-water separator equipped with an external floating roof having primary and secondary seals used to comply with paragraph (D) or (E) of this rule, the secondary seal shall be inspected for seal gaps and repaired as follows:

(a) The secondary seal shall be measured for seal gaps initially, annually, and after repair, as determined under paragraph (I) of rule 3745-21-10 of the Administrative Code.

(b) The accumulated area of gaps that exceed one-eighth inch (0.32 cm) in width between the secondary seal and tank wall shall be no greater than 1.0 square inch per foot (twenty-one square centimeters per meter) of tank diameter.

(c) If the seal gap requirement of paragraph (F)(2)(b) of this rule is not being met, the secondary seal shall be repaired or replaced within forty-five days after detection of the improper seal gap unless the repair or correction is technically infeasible without requiring a process unit shutdown, in which case the repair or correction shall be made at the next process unit shutdown.

(4) The following records shall be maintained on leaks, improper conditions, and improper seal gaps:

(a) The date on which a leak, improper condition, or improper seal gap is discovered;

(b) The date on which a first attempt at repair was made to correct the leak or improper condition; and

(c) The date on which a leak, improper condition, or improper seal gap is repaired.

(5) Monitors shall be installed and maintained as required by this paragraph to measure operational parameters of any emission control device or other device installed to comply with paragraph (D) or (E) of this rule. Such monitoring and parameters shall be sufficient to demonstrate proper functioning of those devices to design specifications, and include the monitoring and parameters listed in paragraphs (F)(3)(a) to (F)(3)(g) of this rule, as applicable, except as provided in paragraph (F)(3)(a) of this rule.

(a) For an enclosed non-catalytic combustion device (including, but not limited to, a thermal incinerator, boiler, or process heater), continuously monitor and record the temperature of the gas stream either in the combustion chamber or immediately downstream before any substantial heat exchange.

(b) For a catalytic incinerator, continuously monitor and record the temperature of the gas stream immediately before and after the catalyst bed.

(c) For a condenser (chiller), continuously monitor and record the temperature of the gas stream at the condenser exit.

(d) For a carbon adsorber, continuously monitor and record the VOC concentration of exhaust gas stream to determine if breakthrough has occurred. If the carbon adsorber does not regenerate the carbon bed directly in the control device (e.g., a carbon canister), the exhaust gas stream shall be monitored daily or at intervals no greater than twenty per cent of the design replacement interval, whichever is greater, or as an alternative to conducting monitoring, the carbon may be replaced with fresh carbon at a regular predetermined time interval that is less than the carbon replacement interval that is determined by the maximum design flow rate and the VOC concentration in the gas stream vented to the carbon adsorber.

(e) For a flare, meet the requirements specified in 40 CFR 60.18(b).

(f) For a steam stripper, continuously monitor and record the steam flow rate, the wastewater feed mass flow rate, and either the wastewater feed temperature or the column operating temperature (i.e., the temperature in the column top tray liquid phase at the downcomer).

(g) For vapor control systems other than those specified in paragraphs (F)(15)(a) to (F)(15)(g) of this rule, continuously monitor and record the appropriate operating parameters.

(h) In lieu of the monitoring and parameters listed in paragraphs (F)(15)(a) to (F)(15)(g) of this rule, other monitoring and parameters may be approved or required by the USEPA. Such approval or requirement shall occur when the Ohio environmental protection agency is informed, in writing, that USEPA has no objection to, or requires, the other monitoring and parameters that are indicated.

(6) For a closed-vent system that is used to comply with paragraph (D) or (E) of this rule and that is designed to operate at a pressure below atmospheric pressure, the closed-vent system shall be equipped with at least one pressure guage or other pressure measurement device that can be read from a readily accessible location to verify that negative pressure is being maintained in the closed-vent system when the control device is operating.

(G) Approved test methods.

Compliance with the emission specifications, vapor control system efficiency, and certain control requirements, inspection requirements, and exemption criteria of paragraphs (D) to (F) and paragraph (C)(2) of this rule (relating to control requirements, alternate control requirements, inspection and monitoring requirements, and exemptions) shall be determined by applying one or more of the following test methods and procedures, as appropriate.

(1) (Gas flow rate) USEPA methods 1, 2, 3 and 4 are used for determining gas flow rates, as necessary.

(2) Concentration of affected VOCs in a gas stream.

(a) USEPA method 18 is used for determining gaseous organic compound emissions by gas chromatography.

(b) USEPA method 25 is used for determining total gaseous nonmethane organic emissions as carbon.

(c) USEPA method 25A or 25B are used for determining total gaseous organic concentrations using flame ionization or nondispersive infrared analysis.

(3) Performance test for control devices.

(a) For flares, the performance test requirements of 40 CFR 60.18(b) shall apply. Compliance with the requirements of 40 CFR 60.18(b) will be considered to represent ninety-eight per cent control of the VOC in the flare inlet.

(b) For control devices other than flares, the VOC control efficiency shall be determined in accordance with paragraph (C) of rule 3745-21-10 of the Administrative Code where the flow rate and VOC concentration of the inlet and outlet gas streams of the control device are measured as specified under paragraphs (G)(1) and (G)(2) of this rule.

(4) (Vapor pressure) Use standard reference texts or ASTM test methods D323-99a, D2879-97(2002)e1, D4953-99a, D5190-01, or D5191-04a for the measurement of vapor pressure, adjusted for actual storage temperature in accordance with American petroleum institute publication 2517.

(5) (Leak determination by instrument method) Use USEPA method 21 for determining VOC leaks and for monitoring a carbon canister in accordance with paragraph (F)(3)(d) of this rule.

(6) (Determination of VOC concentration of wastewater samples) Use SW-846 method 5030B (purge and trap) followed by SW-846 method 8015B with a DB-5 boiling point (or equivalent column), and flame ionization detector, with the detector calibrated with benzene as required by 40 CFR Part 261; SW-846 methods 3810, 5030B (followed by 8021B), 8260B, and 9060 as required by 40 CFR Part 261; USEPA methods 602, 624, 1624, 625, 1625; USEPA method 305; APHA method 5310(B) contained in standard methods for the examination of water and wastewater; or USEPA method 25D. In the event of any conflict, USEPA method 25D takes precedence.

(7) The measurement of wastewater flow rate shall be determined with flow measurement devices. Flow rate measurements shall be taken at the same time as the concentration measurements.

(8) (Minor modifications) Minor modifications to these test methods may be used, if approved by the USEPA. Such approval shall occur when the Ohio environmental protection agency is informed, in writing, that USEPA has no objections to the minor modifications to the test methods.

(9) (Alternate test methods) Test methods other than those specified in paragraphs (J)(1) to (J)(8) of this rule may be used if validated by USEPA method 301.

(H) Recordkeeping.

The owner or operator of an affected industrial category shall comply with the following recordkeeping requirements.

(1) Complete and up-to-date records shall be maintained as needed to demonstrate compliance with paragraphs (D) and (E) of this rule (relating to control requirements and alternate control requirements) which are sufficient to demonstrate the characteristics of wastewater streams and the qualification for any exemptions claimed under paragraph (C)(2) of this rule (relating to exemptions).

(2) Records shall be maintained of the results of any inspection or monitoring conducted in accordance with paragraph (F) of this rule (relating to inspection and monitoring requirements). Records shall be sufficient to demonstrate proper functioning of applicable control equipment to design specifications to ensure compliance with paragraphs (D) and (E) of this rule.

(3) Records shall be maintained of the results of any testing conducted in accordance with paragraph (G) of this rule (relating to approved test methods).

(4) All records shall be maintained at the plant for at least five years and be made available upon request to USEPA, or the appropriate Ohio environmental protection agency district office or local air agency.

(I) Determination of wastewater characteristics.

The determination of the characteristics of a wastewater stream for purposes of this rule shall be made as follows.

(1) The characteristics shall be determined at a location between the point of generation (as defined by this rule) and before the wastewater stream is exposed to the atmosphere, treated for VOC removal, or mixed with another wastewater stream. For wastewater streams at a facility meeting the applicability

requirements under paragraphs (A)(1)(a) and (A)(1)(b) of this rule and which, prior to May 27, 2005, were either actually being mixed or construction had commenced which would result in the wastewater streams being mixed, this mixing shall not establish a limit on where the characteristics may be determined. For wastewater streams at a facility meeting the applicability requirements under paragraphs (A)(1)(c) and (A)(1)(d) of this rule and which, prior to the effective date of this rule, were either actually being mixed or construction had commenced which would result in the wastewater streams being mixed, this mixing shall not establish a limit on where the characteristics may be determined.

(2) The flow rate of a wastewater stream shall be determined on the basis of an annual average by one of the following methods:

(a) The highest annual quantity of wastewater managed, based on historical records for the most recent five years of operation, or for the entire time the wastewater stream has existed if less than five years, but at least one year;

(b) The maximum design capacity of the waste management unit;

(c) The maximum design capacity to generate wastewater of the process unit generating the wastewater stream; or

(d) Measurements that are representative of the actual, normal wastewater generation rates.

(3) The VOC concentration of a wastewater stream shall be determined on the basis of a flow-weighted annual average by one of the following methods, or by a combination of the methods. If the director or USEPA determines that the VOC concentration cannot be adequately determined by knowledge of the wastewater, or by bench-scale or pilot-scale test data, the VOC concentration shall be determined in accordance with paragraph (I)(3)(c) of this rule, or by a combination of the methods in paragraphs (I)(3)(a), (I)(3)(b), and (I)(3)(c) of this rule. VOC with a "Henry's Law Constant" less than $1.8x10^{-6}$ atm-m^3/mole (0.1 y/x) at twenty-five degrees Celsius shall not be included in the determination of VOC concentration.

(a) (Knowledge of the wastewater) Sufficient information to document the VOC concentration. Examples of information include material balances, records of chemical purchases, or previous test results.

(b) (Bench-scale or pilot-scale test data) Sufficient information to demonstrate that the bench-scale or pilot-scale test concentration data are representative of the actual VOC concentration.

(c) (Measurements) Collect a minimum of three representative samples from the wastewater stream and determine the affected VOC concentration for each sample in accordance with paragraph (G) of this rule (relating to approved test methods). The affected VOC concentration of the wastewater stream shall be the flow-weighted average of the individual samples.

(4) The annual affected VOC loading in wastewater for a wastewater stream shall be the annual average flow rate determined in paragraph (I)(2) of this rule multiplied by the annual average affected VOC concentration determined in paragraph (I)(3) of this rule.

(5) The annual VOC loading in wastewater for a plant shall be the sum of the annual VOC loading in wastewater for each affected VOC wastewater stream.

(6) The "Henry's Law Constant" shall be determined by the procedures in 40 CFR part 60, appendix J, as proposed on December 9, 1998 in the Federal Register.

(J) Maintenance wastewater requirements.

(1) Each owner or operator of a source subject to this rule shall comply with the requirements of paragraphs (J)(2) and (J)(3) of this rule for maintenance wastewaters containing volatile organic compounds.

(2) The owner or operator shall prepare a description of maintenance procedures for management of wastewaters generated from the emptying and purging of equipment in the process during temporary shutdowns for inspections, maintenance, and repair (i.e., a maintenance-turnaround) and during periods which are not shutdowns (i.e., routine maintenance). The descriptions shall:

(a) Specify the process equipment or maintenance tasks that are anticipated to create wastewater during maintenance activities.

(b) Specify the procedures that will be followed to properly manage the wastewater and control VOC emissions to the atmosphere.

(c) Specify the procedures to be followed when clearing materials from the process equipment.

(3) The owner or operator shall modify and update the information required by paragraph (J)(2) of this rule as needed following each maintenance procedure based on the actions taken and the wastewaters generated in the preceding maintenance procedure.

(4) The owner or operator shall maintain a record of the information required by paragraphs (J)(2) and (J)(3) of this rule.

(K) Compliance dates.

(1) Except where otherwise specified within this rule, any owner or operator of a facility that is subject to this rule shall comply with the requirements of this rule by no later than the following dates:

(a) For a facility located in Butler, Clermont, Hamilton, or Warren county and for which installation commenced before May 27, 2005, the compliance date of any waste management unit within the facility is either May 27, 2006 or the date of initial startup of the waste management unit, whichever is later.

(b) For a facility located in Butler, Clermont, Hamilton, or Warren county and for which installation commenced on or after the effective date of this rule, the compliance date of any waste management unit is the date of initial startup of the waste management unit.

(c) For a facility located in Ashtabula, Cuyahoga, Geauga, Lake, Lorain, Medina, Portage, or Summit county and for which installation commenced before the effective date of this rule, the compliance date of any waste management unit within the facility is either twelve months from the effective date of this rule or the date of initial startup of the waste management unit, whichever is later.

(d) For a facility located in Ashtabula, Cuyahoga, Geauga, Lake, Lorain, Medina, Portage, or Summit county and for which installation commenced on or after the effective date of this rule, the compliance date of any waste management unit is the date of initial startup of the waste management unit.

(2) For any emission control device that is used to comply with an emission control requirement of this rule, the owner or operator shall demonstrate compliance by testing the emission control device in accordance with paragraph (G) of this rule within ninety days after the compliance date.

(3) For any treatment process (or combined treatment processes) that is used to comply with this rule, the owner or operator shall demonstrate compliance by testing the treatment process (or combined treatment processes) in accordance with the methods in paragraph (G) of this rule within ninety days after the compliance date.

(4) Additional testing of the emission control device or the treatment process in accordance with paragraph (G) of this rule may be required by the director to ensure continued compliance.

(5) In the event the owner or operator reduces the facilities potential to emit pursuant to paragraph (A)(4) or (A)(5) of this rule, the date on which the facility

subsequently meets the applicability criteria of paragraph (A)(1) of this rule is the date the facility becomes subject to this rule.

(L) Requirements on applicability notification and permit application.

(1) The owner or operator of a facility that is subject to this rule, is located in Butler, Clermont, Hamilton or Warren county, and has an initial startup of a waste management unit before May 27, 2005 shall notify the appropriate Ohio environmental protection agency district office or local air agency in writing that the facility is subject to this rule. The notification, which shall be submitted not later than July 26, 2005, shall provide the information specified in paragraph (L)(5) of this rule.

(2) The owner or operator of a facility that is subject to this rule, is located in Butler, Clermont, Hamilton or Warren county, and has an initial startup of a waste management unit on or after the effective date of this rule, shall notify the appropriate Ohio environmental protection agency district office or local air agency in writing that the waste management unit is subject to this rule. The notification, which shall be submitted not later than either the date of initial startup of the waste management unit or July 26, 2005 (whichever is later), shall provide the information specified in paragraph (L)(5) of this rule. The application for an installation permit under rule 3745-31-02 of the Administrative Code may be used to fulfill the notification requirements of this paragraph.

(3) The owner or operator of a facility that is subject to this rule, is located in Ashtabula, Cuyahoga, Geauga, Lake, Lorain, Medina, Portage, or Summit county, and has an initial startup of a waste management unit before the effective date of this rule, shall notify the appropriate Ohio environmental protection agency district office or local air agency in writing that the facility is subject to this rule. The notification, which shall be submitted not later than sixty days after the effective date of this rule, shall provide the information specified in paragraph (L)(5) of this rule.

(4) The owner or operator of a facility that is subject to this rule, is located in Ashtabula, Cuyahoga, Geauga, Lake, Lorain, Medina, Portage, or Summit county, and has an initial startup of a waste management unit on or after the effective date of this rule, shall notify the appropriate Ohio environmental protection agency district office or local air agency in writing that the waste management unit is subject to this rule. The notification, which shall be submitted not later than either the date of initial startup of the waste management unit or sixty days after the effective date of this rule (whichever is later), shall provide the information specified in paragraph (L)(5) of this rule. The application for an installation permit under rule 3745-31-02 of the Administrative Code may be used to fulfill the notification requirements of this paragraph.

(5) The notification required in paragraphs (L)(1) to (L)(4) of this rule shall include the following information:

(a) Name and address of the owner or operator;

(b) Address (i.e., physical location) of the facility;

(c) Equipment description and Ohio EPA application number (if assigned) of any waste management unit;

(d) Identification of the applicable requirements, the means of compliance, and the compliance date for the waste management unit; and

(e) Regarding a permit for any waste management unit, whichever of the following is applicable:

(i) Submission of an application for an operating permit, modification, or renewal of an operating permit, in accordance with paragraph (B) of rule 3745-35-02 of the Administrative Code; or

[Comment: Applications requiring submittal prior to June 30, 2008, were submitted in accordance with Chapter 3745-35 of the Administrative Code.]

(ii) Statement of intent to submit an application for a Title V permit or modification of a Title V permit in accordance with rule 3745-77-02 or rule 3745-77-08 of the Administrative Code, respectively.

Effective: 04/02/2009

R.C. 119.032 review dates: 08/25/2013

CERTIFIED ELECTRONICALLY
Certification

03/23/2009
Date

Promulgated Under: 119.03
Statutory Authority: 3704.03(E)
Rule Amplifies: 3704.03(A), 3704.03(E)
Prior Effective Dates: 05/27/05, 08/25/08

3745-21-17 **Portable fuel containers.**

(A) Applicability.

Except as provided in paragraph (C) of this rule, this rule applies to any person who sells, supplies, offers for sale, or manufactures for sale in Ohio portable fuel containers or spouts or both portable fuel containers and spouts for use in Ohio.

Except as provided in paragraph (C) of this rule, no person shall sell, supply, offer for sale, advertise, or manufacture for sale in Ohio a portable fuel container or spout or both portable fuel container or spout on or after July 1, 2007 unless the portable fuel container or spout or both portable fuel container and spout:

(1) Has been certified by the California air resources board (CARB) pursuant to the certification requirements contained in title 13, division 3, chapter 9, article 6 of the California Code of Regulations; "Portable Containers and Spouts;" effective October 11, 2006 and the manufacturer, supplier, seller or other person has submitted to the director a copy of the certification document; or

[Comment: Copies of the California Code of Regulations may be obtained by writing to: "West Customer Service, P.O. Box 64833, St. Paul, MN 55164-0833" or by calling 1-800-888-3600. The full text of regulations are also available in electronic format at http://ccr.oal.ca.gov/.]

(2) Has been certified or otherwise approved under requirements and in a manner that the director of the Ohio EPA determines are as stringent as the California requirements identified in paragraph (A)(1) of this rule and the manufacturer, supplier, seller or other person has submitted to the director a copy of such certification or approval document.

(B) Definitions.

The definitions applicable to this rule are contained in paragraph (Z) of rule 3745-21-01 of the Administrative Code.

(C) Exemptions.

This rule does not apply to:

(1) Any portable fuel container or spout or both portable fuel container and spout manufactured in Ohio for shipment, sale, and use outside of Ohio.

(2) Safety cans meeting the requirements of 29 CFR Part 1926, Subpart F; "Fire Protection and Prevention;" as published in the July 1, 2006 edition of the Code of Federal Regulations.

[Comment: Information and copies of the Code of Federal Regulations (CFR) may be obtained by writing to: "Superintendent of Documents, Attn: New Orders, PO Box 371954, Pittsburgh, PA 15250-7954." The full text of the CFR is also available in electronic format at www.access.gpo.gov/nara/cfr/. The CFR compilations are also available for inspection and copying at most public libraries and "The State Library of Ohio."]

(3) Portable fuel containers with a nominal capacity less than or equal to one quart.

(4) Rapid refueling devices with nominal capacities greater than or equal to four gallons, provided such devices are designed for use in officially sanctioned off-highway motor sports such as car racing or motorcycle competitions and either create a leak-proof seal against a stock target fuel tank or are designed to operate in conjunction with a receiver permanently installed on the target fuel tank.

(5) Portable fuel tanks manufactured specifically to deliver fuel through a hose attached between the portable fuel tank and the outboard engine for the purpose of operating the outboard engine.

(6) Closed-system portable fuel containers that are used exclusively for fueling remote control model airplanes.

(7) Portable fuel containers or portable fuel container spouts manufactured prior to July 1, 2007.

Effective: 06/21/2007

R.C. 119.032 review dates: 02/10/2011

CERTIFIED ELECTRONICALLY
Certification

06/11/2007
Date

Promulgated Under: 119.03
Statutory Authority: 3704.03 (E)
Rule Amplifies: 3704.03(A), 3704.03(E)
Prior Effective Dates: 2/10/2006

3745-21-18 **Commercial motor vehicle and mobile equipment refinishing operations.**

[Comment: For dates and availability of non-regulatory government publications, publications of recognized organizations and associations, federal rules, and federal statutory provisions referenced in this rule, see paragraph (HH) of rule 3745-21-01 of the Administrative Code titled "Referenced materials."

(A) Applicability.

(1) All commercial motor vehicle and mobile equipment refinishing operations (sources), regardless of date of construction or modification, that are located in Butler, Clark, Clermont, Greene, Hamilton, Miami, Montgomery, or Warren county shall comply with:

(a) The requirements of paragraphs (C)(1) and (C)(2) of this rule beginning May 1, 2009; and

(b) The requirements of paragraphs (C)(3) to (C)(6) of this rule beginning April 11, 2006.

(2) All commercial motor vehicle and mobile equipment refinishing operations (sources), regardless of date of construction or modification, that are located in Ashtabula, Cuyahoga, Geauga, Lake, Lorain, Medina, Portage, or Summit county shall achieve compliance with the requirements of this rule by no later than one year after the effective date of this rule.

(B) Definitions.

The definitions applicable to this rule are contained in paragraph (D) of rule 3745-21-01 of the Administrative Code.

(C) Operating requirements.

Except where exempt under paragraph (D) of this rule a person at a facility subject to the requirements of this rule shall:

(1) Not apply to mobile equipment or mobile equipment components any automotive pretreatment, automotive primer-surfacer, automotive primer-sealer, automotive topcoat, or automotive specialty coatings, including any VOC-containing materials added to the original coating supplied by the manufacturer, that contain VOCs in excess of the limits specified in the table of this rule:

-Table: Allowable content of VOCs in mobile equipment repair and refinishing coatings, as applied (in weight of VOC per volume of coating, excluding water and non-VOC or exempt solvents)-

Coating Type	Limit (pounds VOC per gallon of coating, excluding water and exempt solvents)	Limit (grams VOC per liter of coating, excluding water and exempt solvents)
pretreatment primer	6.5	780
primer-surfacer	4.8	575
primer-sealer	4.6	550
topcoat(single-stage)	5.0	600
topcoat (two-stage basecoat/clearcoat)	5.0	600
topcoat (three or four-stage basecoat/clearcoat)	5.2	625
multi-colored topcoat	5.7	680
automotive specialty	7.0	840

(2) Calculate the VOC content of the coatings employed in accordance with the following:

(a) Except for multi-stage topcoats, the mass of VOC per combined volume of VOC and coating solids, excluding water and exempt solvents, shall be calculated by the following equation:

$$VOC = \frac{(Wv - Ww - Wec)}{(V - Vw - Vec)}$$

where:

VOC = VOC content in pounds per gallon of coating, excluding water and exempt solvents;

Wv = mass of total volatiles, in pounds;

Ww = mass of water, in pounds;

Wec = mass of exempt solvents, in pounds;

V = volume of coating, in gallons;

Vw = volume of water, in gallons; and

Vec = volume of exempt solvents, in gallons.

(b) The VOC content of a multi-stage topcoat shall be calculated by the following equation:

$$VOCmulti = \frac{VOCbc + \sum_{i=0}^{M} VOCmci + 2(VOCcc)}{M+3}$$

where:

VOCmulti = VOC content of multistage topcoat, in pounds per gallon, excluding water and exempt solvents;

VOCbc = VOC content of basecoat, in pounds per gallon, excluding water and exempt solvents;

VOCmci = VOC content of each midcoat(s), in pounds per gallon, excluding water and exempt solvents;

VOCcc = VOC content of the clear coat, in pounds per gallon, excluding water and exempt solvents; and

M = number of midcoats.

(The VOC content of each coating shall be measured in accordance with USEPA method 24.)

(3) Use one or more of the following application techniques, in accordance with manufacturer's specifications, to apply any coating containing a VOC as a pretreatment, primer, sealant, basecoat, clear coat, or topcoat to mobile equipment for commercial purposes:

(a) Flow or curtain coating;

(b) Dip coating;

(c) Roller coating;

(d) Brush coating;

(e) Cotton-tipped swab application;

(f) Electro-deposition coating;

(g) HVLP spraying;

(h) Electrostatic spray;

(i) Airless spray;

(j) Air-assisted airless spray; and

(k) Any other coating application method that the owner or operator of the facility demonstrates and Ohio environmental protection agency determines achieves emission reductions equivalent to HVLP or electrostatic spray application methods. This demonstration shall be submitted for approval to the director of Ohio environmental protection agency. Any equivalent coating application method approved by the director shall be submitted to the USEPA as a revision to the Ohio state implementation plan for ozone.

(4) Be properly trained in the use of an HVLP sprayer, or equivalent application, in accordance with manufacturer's specifications, and in the handling of a coating and any solvents used to clean the sprayer.

(5) Ensure that the spray guns used to apply mobile equipment repair and refinishing coatings shall be cleaned by one of the following:

(a) An enclosed spray gun cleaning system that is kept closed when not in use;

(b) Un-atomized discharge of solvent into a paint waste container that is kept closed when not in use;

(c) Disassembly of the spray gun and cleaning in a vat that is kept closed when not in use; and

(d) Atomized spray into a paint waste container that is fitted with a device designed to capture atomized solvent emissions.

(6) Store the following materials in nonabsorbent, non-leaking containers and keep these containers closed at all times when not in use:

(a) Fresh coatings;

(b) Used coatings;

(c) Solvents;

(d) VOC-containing additives and materials;

(e) VOC-containing waste materials; and

(f) Cloth, paper, or absorbent applicators moistened with any of the items listed in this subsection.

(D) Exemptions.

The following coating applications shall be exempt from the requirements of this rule:

(1) The application of a coating for graphic designs, stenciling, lettering or other identification marking through the use of an air brush method;

(2) The application of a coating sold in a non-refillable aerosol container; and

(3) The application of a coating to mobile equipment solely for repair of small areas of surface damage or minor imperfections.

(E) Record keeping and reporting requirements.

(1) Each owner or operator subject to the provisions of this rule shall submit documentation sufficient to demonstrate that high efficiency transfer application techniques of coatings required in this rule are in use at their facility. The documentation also shall verify that all employees applying coatings are properly trained in the use of an HVLP sprayer, or equivalent application, and in the handling of a coating and any solvents used to clean the sprayer. This documentation shall be submitted to the appropriate Ohio environmental protection agency district office or local air agency. In addition, the owner or operator shall retain the documentation on site and make the documentation available to the appropriate Ohio environmental protection agency district office or local air agency upon request. The documentation shall be submitted by:

(a) June 10, 2006 for sources covered under paragraph (A)(1)(b) of this rule;

(b) June 10, 2009 for sources covered under paragraph (A)(1)(a) of this rule; or

(c) No later than one year after the effective date of this rule for sources covered under paragraph (A)(2) of this rule.

(2) Each owner or operator subject to the provisions of this rule shall maintain records for a period of five years of the amount and VOC content of each coating employed and report to the director all emissions in excess of the limits specified in the table of this rule within forty-five days after each exceedance is discovered.

Effective: 04/02/2009

R.C. 119.032 review dates: 08/25/2013

CERTIFIED ELECTRONICALLY
Certification

03/23/2009
Date

Promulgated Under: 119.03
Statutory Authority: 3704.03(E)
Rule Amplifies: 3704.03(A), 3704.03(E)
Prior Effective Dates: 2/10/06, 8/25/08

3745-21-19 **Control of volatile organic compound emissions from aerospace manufacturing and rework facilities.**

[Comment: For dates and availability of non-regulatory government publications, publications of recognized organizations and associations, federal rules, and federal statutory provisions referenced in this rule, see the "Incorporation by Reference" paragraph at the end of rule 3745-21-01 of the Administrative Code.]

(A) Rule applicability.

(1) Except as otherwise provided in paragraph (A)(2) of this rule, this rule shall apply to any aerospace manufacturing or rework facility that is located in Ashtabula, Cuyahoga, Geauga, Lake, Lorain, Medina, Portage, or Summit county.

(2) Excluded from the requirements of this rule is any aerospace manufacturing or rework facility that has the potential to emit for VOC of less than 25.0 tons per year for all operations combined where aerospace components and vehicles are cleaned or coated. The activities, operations, and materials described in paragraphs (C)(2) and (C)(3) of this rule are not included in such determination of potential to emit for VOC.

(B) Definitions.

The definitions applicable to this rule are contained in paragraphs (B) and (AA) of rule 3745-21-01 of the Administrative Code.

(C) Overall requirements for an aerospace manufacturing or rework facility.

(1) Except as otherwise provided in paragraphs (C)(2) and (C)(3) of this rule, any owner or operator of an aerospace manufacturing or rework facility that is subject to this rule shall comply with the requirements of paragraphs (D) to (L) of this rule.

(2) This rule does not apply to the following activities where cleaning and coating of aerospace components and vehicles may take place:

(a) Research and development;

(b) Quality control;

(c) Laboratory testing; and

(d) Electronic parts and assemblies (except for cleaning and coating of completed assemblies).

(3) This rule does not apply to rework operations performed on antique aerospace vehicles and components.

(D) VOC emission limitations and application methods for coating operations.

(1) Except as otherwise provided in paragraphs (D)(2) and (D)(3) of this rule, a person shall not apply to aerospace vehicles or components any coating that contains VOC in excess of the VOC content limits specified below:

(a) VOC content limits for primers, topcoats, and chemical milling maskants.

--

Type of coating	VOC content limit (pounds of VOC per gallon of coating, excluding water and exempt solvents, as applied)
Primer	2.9
Primer for general aviation rework facility	4.5
Exterior primer for large commercial aircraft (components or fully assembled)	5.4
Topcoat	3.5
Topcoat for general aviation rework facility	4.5
Self-priming topcoat	3.5
Self-priming topcoat for general aviation rework facility	4.5
Chemical milling maskant, type I	5.2
Chemical milling maskant, type II	1.3

(b) VOC content limits for specialty coatings.

--

Type of specialty coating	VC content limit (pounds of VOC per gallon of coating, excluding water and exempt solvents, as applied)
Ablative coating	5.0
Adhesion promoter	7.4
Adhesive bonding primer cured above two hundred fifty degrees Fahrenheit	8.6
Adhesive bonding primer cured at two hundred fifty degrees Fahrenheit or below	7.1
Antichafe coating	5.5
Bearing coating	5.2
Bonding maskant	10.3
Caulking and smoothing compounds	7.1

Chemical agent-resistant coating	4.6
Clear coating	6.0
Commercial exterior aerodynamic structure primer	5.4
Commercial interior adhesive	6.3
Compatible substrate primer	6.5
Corrosion prevention compound	5.9
Critical use and line sealer maskant	8.5
Cryogenic flexible primer	5.4
Cryoprotective coating	5.0
Cyanoacrylate adhesive	8.5
Dry lubricative material	7.3
Electric or radiation-effect coating	6.7
Electrostatic discharge and electromagnetic interference (EMI) coating	6.7
Elevated temperature Skydrol-resistant commercial primer	6.2
Epoxy polyamide topcoat	5.5
Fire-resistant (interior) coating	6.7
Flexible primer	5.3
Flight test coatings; all other	7.0
Flight test coatings: missile or single use aircraft	3.5
Fuel tank adhesive	5.2
Fuel tank coating	6.0
High temperature coating	7.1
Insulation covering	6.2
Intermediate release coating	6.3
Lacquer	6.9
Metallized epoxy coating	6.2
Mold release	6.5
Nonstructural adhesive	3.0
Optical anti-reflective coating	6.3
Part marking coating	7.1
Pretreatment coating	6.5
Rain erosion-resistant coating	7.1
Rocket motor bonding adhesive	7.4
Rocket motor nozzle coating	5.5
Rubber-based adhesive	7.1
Scale inhibitor	7.3
Screen print ink	7.0
Seal coat maskant	10.3
Sealants: extrudable, rollable, or brushable sealant	2.3

Sealants: sprayable sealant	5.0
Silicone insulation material	7.1
Solid film lubricant	7.3
Specialized function coating	7.4
Structural autoclave adhesive	0.5
Structural nonautoclavable adhesive	7.1
Temporary protective coating	2.7
Thermal control coating	6.7
Wing coating	7.1
Wet fastener installation coating	5.6

(2) VOC emission control system for a coating operation.

In lieu of the VOC content limit for a coating subject to paragraph (D)(1) of this rule, a VOC emission control system shall be used that achieves, for the coating employed and designated for control, an overall reduction of VOC emissions that is equal to or greater than eighty-one per cent by weight. Also, if the VOC emission control system includes a thermal or catalytic oxidizer, the control efficiency of the thermal or catalytic oxidizer for VOC emissions shall be at least ninety per cent by weight.

(3) The following coating applications are exempt from the VOC content limits listed in paragraphs (D)(1)(a) and (D)(1)(b) of this rule:

(a) Aerosol coatings;

(b) Touchup and repair coatings;

(c) DOD classified coatings;

(d) Coating of space vehicles; and

(e) Coatings that meet the following low usage restrictions at the facility;

(i) Annual total usage of each separate coating formulation does not exceed fifty gallons; and

(ii) Combined annual total usage of such coating formulations does not exceed two hundred gallons.

(4) Except as otherwise provided in paragraph (D)(5) of this rule, a person shall use one or more of the following application methods for applying primers and topcoats (including self-priming topcoat) to aerospace vehicles or components:

(a) Flow/curtain applications;

(b) Dip coat application;

(c) Roll coating;

(d) Brush coating;

(e) Cotton tipped swab application;

(f) Electrodeposition (dip) coating;

(g) High volume low pressure (HVLP) spraying;

(h) Electrostatic spray application; or

(i) Other coating application methods that achieve VOC emission reductions equivalent to HVLP or electrostatic spray application methods, as determined according to the requirements in 40 CFR 63.750(i).

(5) The following situations are exempt from the application method requirements specified in paragraph (D)(4) of this rule:

(a) Any situation that normally requires the use of an airbrush or an extension on the spray gun to properly reach limited access spaces;

(b) The application of coatings that contain fillers that adversely affect atomization with HVLP spray guns and that the permitting agency has determined cannot be applied by any of the application methods specified in paragraph (D)(4) of this rule;

(c) The application of coatings that normally have a dried film thickness of less than 0.0013 centimeter (0.0005 inch) and that the director has determined cannot be applied by any of the application methods specified in paragraph (D)(4) of this rule;

(d) The use of airbrush application methods for stenciling, lettering, and other identification markings;

(e) The use of handheld spray can application methods; and

(f) Touchup and repair operations.

(E) VOC requirements for cleaning operations.

(1) Hand wipe cleaning operations.

(a) Except as otherwise provided in paragraph (E)(1)(b) of this rule, any cleaning solvent employed in a hand wipe cleaning operation shall meet one of the following specifications:

(i) Meet the definition of an aqueous cleaning solvent; or

(ii) Have a VOC composite vapor pressure of 7.0 millimeters of mercury (3.75 inches of water) or less at twenty degrees Celsius (sixty-eight degrees Fahrenheit).

(b) The following hand wipe cleaning operations are exempt from the requirements of paragraph (E)(1)(a) of this rule:

(i) Cleaning during the manufacture, assembly, installation, maintenance, or testing of components of breathing oxygen systems that are exposed to the breathing oxygen;

(ii) Cleaning during the manufacture, assembly, installation, maintenance, or testing of parts, subassemblies, or assemblies that are exposed to strong oxidizers or reducers (e.g., nitrogen tetroxide, liquid oxygen, or hydrazine);

(iii) Cleaning and surface activation prior to adhesive bonding;

(iv) Cleaning of electronic parts and assemblies containing electronic parts;

(v) Cleaning of aircraft and ground support equipment fluid systems that are exposed to the fluid, including air-to-air heat exchangers and hydraulic fluid systems;

(vi) Cleaning of fuel cells, fuel tanks, and confined spaces;

(vii) Surface cleaning of solar cells, coated optics, and thermal control surfaces;

(viii) Cleaning during fabrication, assembly, installation, and maintenance of upholstery, curtains, carpet, and other textile materials used in the interior of the aircraft;

(ix) Cleaning of metallic and nonmetallic materials used in honeycomb cores during the manufacture or maintenance of these cores, and cleaning of the completed cores used in the manufacture of aerospace vehicles or components;

(x) Cleaning of aircraft transparencies, polycarbonate, or glass substrates;

(xi) Cleaning and cleaning solvent usage associated with research and development, quality control, and laboratory testing;

(xii) Cleaning operations, using nonflammable liquids, conducted within five feet of energized electrical systems (energized electrical systems means any AC or DC electrical circuit on an assembled aircraft once electrical power is connected, including interior passenger and cargo areas, wheel wells and tail sections); and

(xiii) Cleaning operations identified as essential uses under the Montreal Protocol for which the USEPA has allocated essential use allowances or exemptions in 40 CFR 82.4.

(2) Spray gun cleaning operations.

(a) Except as otherwise provided in paragraph (E)(2)(b) of this rule, any spray gun to be cleaned shall be cleaned by one or more of the techniques specified in paragraphs (E)(2)(a)(i) to (E)(2)(a)(iv) of this rule.

(i) Enclosed system.

(a) Clean the spray gun in an enclosed system that is closed at all times except when inserting or removing the spray gun. Cleaning shall consist of forcing solvent through the gun.

(b) Visually inspect the seals and other potential sources of leaks associated with the enclosed system at least once per month. If leaks are found, repairs shall be made as soon as practicable, but no later than fifteen days after the leak was found. If the leak is not repaired by the fifteenth day after detection, the cleaning solvent shall be removed, and the enclosed cleaner shall be shut down until the leak is repaired or its use is permanently discontinued.

(ii) Nonatomized cleaning.

Clean the spray gun by placing cleaning solvent in the pressure pot and forcing it through the gun with the atomizing cap in place. No atomizing air is to be used. Direct the cleaning solvent from the spray gun into a vat, drum, or other waste container that is closed when not in use.

(iii) Disassembled spray gun cleaning.

Disassemble the spray gun and clean the components by hand in a vat, which shall remain closed at all times except when in use.

Alternatively, soak the components in a vat, which shall remain closed during the soaking period and when not inserting or removing components.

(iv) Atomized cleaning.

Clean the spray gun by forcing the cleaning solvent through the gun and directing the resulting atomized spray into a waste container that is fitted with a device designed to capture the atomized cleaning solvent emissions.

(b) The cleaning of nozzle tips of automated spray equipment systems, except for robotic systems that can be programmed to spray into a closed container, shall be exempt from the requirements of paragraph (E)(2)(a) of this rule.

(3) Flush cleaning operations.

(a) Except as otherwise provided in paragraph (E)(3)(b) of this rule, the used cleaning solvent of any flush cleaning operation shall be emptied into an enclosed container or collection system that is kept closed when not in use or captured with wipers provided they comply with the housekeeping requirements of paragraph (E)(4) of this rule.

(b) Excluded from the requirements of paragraph (E)(3)(a) of this rule is any cleaning solvent that meets any of the following specifications:

(i) Meets the definition of an aqueous cleaning solvent;

(ii) Has a VOC composite vapor pressure of 7.0 millimeters of mercury (3.75 inches of water) or less at twenty degrees Celsius (sixty-eight degrees Fahrenheit); or

(iii) Meets the definition of a semiaqueous cleaning solvent.

(4) Housekeeping measures for cleaning solvents and solvent-laden cleaning materials used in cleaning operations.

(a) Except for semiaqueous cleaning solvents and where excluded under paragraph (E)(4)(d) of this rule, all fresh and spent cleaning solvents shall be stored in nonabsorbent, nonleaking containers that are kept closed at all times except when filling or emptying.

(b) Except where excluded under paragraph (E)(4)(d) of this rule, all used solvent-laden cloths and papers, and any other absorbent applicators used for cleaning, shall be placed in nonabsorbent, nonleaking containers or bags

that are kept closed at all times except when depositing or removing these materials from the container or bag.

(c) Except where excluded under paragraph (E)(4)(d) of this rule, the handling and transfer of cleaning solvents to or from enclosed systems, vats, waste containers, and other cleaning operation equipment that hold or store fresh or spent cleaning solvents shall be conducted in such a manner that minimizes spills.

(d) Excluded from the requirements of paragraphs (E)(4)(a) to (E)(4)(c) of this rule is the use of any cleaning solvent that meets any of the following specifications:

(i) Meets the definition of an aqueous cleaning solvent; or

(ii) Has a VOC composite vapor pressure of 7.0 millimeters of mercury (3.75 inches of water) or less at twenty degrees Celsius (sixty-eight degrees Fahrenheit).

(F) Compliance Dates.

(1) Except where otherwise specified within this rule, any owner or operator of a facility that is subject to this rule shall comply with the requirements of this rule by no later than the following dates:

(a) For an aerospace manufacturing or rework facility for which installation commenced before the effective date of this rule, the compliance date is either twelve months after the effective date of this rule or the date of initial startup of the aerospace manufacturing or rework facility, whichever is later.

(b) For an aerospace manufacturing or rework facility for which installation commenced on or after the effective date of this rule, the compliance date is the date of initial startup of the aerospace manufacturing or rework facility.

(2) For a VOC emission control system that is used for a coating operation to comply with paragraph (D)(2) of this rule, the owner or operator shall demonstrate the overall control efficiency of the VOC emission control system and the control efficiency of any thermal or catalytic oxidizer within the VOC emission control system by testing the coating operation and the VOC emission control system in accordance with paragraph (I) of this rule within ninety days after the coating operation's compliance date.

(3) Additional testing of the coating operation and the VOC emission control system in accordance with paragraph (I) of this rule may be required by the director to ensure continued compliance.

(G) Monitoring requirements for a VOC emission control system.

For a VOC emission control system that is used for a coating operation to comply with paragraph (D)(2) of this rule, the owner or operator shall meet the same monitoring requirements as contained in paragraph (H) of rule 3745-21-15 of the Administrative Code.

(H) Procedures for the VOC content of a coating, the VOC content of a coating applied by a dip coater, the composition of a cleaning solvent, and the VOC composite vapor pressure of a cleaning solvent.

(1) The VOC content of a coating shall be determined by the owner or operator in accordance with paragraph (B) of rule 3745-21-10 of the Administrative Code, wherein formulation data or USEPA Method 24 procedures (which include various ASTM measurement methods) may be employed.

(2) VOC content of a coating applied by a dip coater (rolling thirty-day average VOC content).

The as applied VOC content of a coating applied by a dip coater shall be determined by the owner or operator as a rolling thirty-day average of the VOC content of the material (coating and thinner) added to the reservoir of the dip coater. The rolling thirty-day average VOC content (C_{30}), expressed in pounds of VOC per gallon of coating, excluding water and exempt solvents, as applied, shall be calculated for each day of operation of the dip coater as follows:

$$C_{30} = \frac{\sum_{i=1}^{n} (A_{i,30})(C_{i,VOC})}{\sum_{i=1}^{n} (A_{i,30})(V_{i,VOC} + V_{i,solids})}$$

Where:

$A_{i,30}$ = amount of material i added to the reservoir of the dip coater during a thirty-day period consisting of the day of operation of the dip coater plus the previous twenty-nine calendar days, expressed in gallons.

$C_{i,VOC}$ = VOC content of material i expressed in pounds of VOC per gallon.

$V_{i,solids}$ = volume fraction of solids (nonvolatile matter) in material i.

$V_{i,VOC}$ = volume fraction of VOC in material i.

i = subscript denoting a specific material (coating or thinner) added to the reservoir of the dip coater during the thirty-day period.

n = total number of materials (coatings and thinners) added to the reservoir of the dip coater during the thirty-day period.

(3) The composition of a cleaning solvent shall be based upon data supplied by the manufacturer of the cleaning solvent. The data shall identify all components of the cleaning solvent.

(4) The VOC composite vapor pressure of a cleaning solvent shall be determined by the owner or operator in accordance with paragraph (S) of rule 3745-21-10 of the Administrative Code.

(I) Compliance tests for VOC emission control systems.

(1) For a VOC emission control system used to comply with paragraph (D)(2) of this rule, the owner or operator shall conduct a compliance test to determine the capture efficiency of the capture system, the control efficiency of the control device (or each control device if a combination of control devices is employed), and the overall control efficiency of the VOC emission control system in accordance with paragraph (C) of rule 3745-21-10 of the Administrative Code wherein USEPA Method 25 or 25A shall be used for determining the concentration of VOC in a gas stream.

(2) During the compliance test described in paragraph (I)(1) of this rule that demonstrates compliance, the owner or operator shall establish the operating limits (operating parameter values) for the monitoring devices required under paragraph (G) of this rule by following the requirements contained in paragraph (J)(2) of rule 3745-21-15 of the Administrative Code.

(J) Recordkeeping.

(1) (General) All records specified under paragraph (J) of this rule shall be retained by the owner or operator for a period of not less than five years and shall be made available to the director or any authorized representative of the director for review during normal business hours. The following types of records are to be maintained by the owner or operator of an aerospace manufacturing or rework facility subject to this rule:

(a) Compliance demonstration records for coating operations.

(b) Compliance demonstration records for cleaning operations.

(c) Monitoring records for VOC emission control systems.

(2) Compliance demonstration records for coating operations.

For any coating operation subject to paragraph (D) of this rule, the owner or operator shall maintain the following records:

(a) For each coating in use at the facility:

(i) The name and VOC content as received and as applied.

(ii) The type of coating, as identified in paragraphs (D)(1)(a) and (D)(1)(b) of this rule.

(iii) Where applicable, identification of the coating as designated for control pursuant to paragraph (D)(2) of this rule or exempted pursuant to paragraphs (D)(3)(a) to (D)(3)(e) of this rule.

(b) All data, calculations, and test results (including USEPA Method 24 results) used in determining the VOC content of each coating, expressed in pounds of VOC per gallon of coating, excluding water and exempt solvents, as applied.

(c) The amount (gallons) of each coating used each month at the facility.

(d) For any coating operation controlled by a VOC emission control system:

(i) Identification of the coating line.

(ii) Documentation on the overall control efficiency of the VOC emission control system and the control efficiency of any thermal or catalytic oxidizer within the VOC emission control system, including design estimates and the results of compliance tests conducted pursuant to paragraphs (F)(2), (F)(3), and (I) of this rule.

(iii) For any coating that is controlled by the VOC emission control system, the name of the coating, the dates (or time periods) of control, and the amount (gallons) of such coating controlled each month.

(e) Records pertaining to a rolling thirty-day average VOC content for a dip coater:

(i) For each day of operation, the gallons of each material (coating and thinner) added to the dip coater reservoir.

(ii) The VOC content (in pounds of VOC per gallon), volume fraction VOC, and volume fraction solids for each material added to the dip coater reservoir.

(iii) For each day of operation, the rolling thirty-day average VOC content in pounds of VOC per gallon of coating, excluding water and exempt solvent, as applied, as determined in accordance with paragraph (H)(2) of this rule.

(f) Records pertaining to the low usage coating exemption (for coating formulations elected by the owner or operator as being subject to the low usage restrictions under paragraph (D)(3)(e) of this rule):

(i) The name of each separate coating formulation;

(ii) The amount (gallons) used during the month at the facility for each separate coating formulation; and

(iii) The total amount (gallons) used during the calendar year at the facility for each separate coating formulation and for all such coatings formulations combined.

(3) Compliance demonstration records for cleaning operations.

For cleaning operations subject to paragraph (E) of this rule, the owner or operator shall maintain the following records, where appropriate:

(a) The name, vapor pressure (i.e., VOC composite vapor pressure), and documentation showing the composition of each cleaning solvent used.

(b) A listing of cleaning operations in which each cleaning solvent is used.

(c) For each cleaning solvent used in hand wipe cleaning operations that complies with the water composition requirement under the paragraph (E)(1)(a)(i) of this rule or the VOC composite vapor pressure requirement under paragraph (E)(1)(a)(ii) of this rule:

(i) The name of each cleaning solvent used;

(ii) All data and calculations that demonstrate the cleaning solvent complies with either the water composition requirement or VOC composite vapor pressure requirement; and

(iii) The amount (gallons) of each cleaning solvent used each year, as determined from facility purchase or usage records.

(d) For each cleaning solvent used in hand wipe cleaning operations that does not comply with the requirements under paragraph (E)(1)(a) of this rule, but is exempted under paragraph (E)(1)(b) of this rule:

(i) The name of each cleaning solvent used;

(ii) A list of the exempted hand wipe cleaning operations set forth in paragraph (E)(1)(b) of this rule in which each cleaning solvent is used; and

(iii) The amount (gallons) of each cleaning solvent used each year, as determined from facility purchase or usage records.

(e) For each cleaning solvent used in flush cleaning operations that complies with the water composition requirement under paragraph (E)(3)(b)(i) or (E)(3)(b)(iii) of this rule or the VOC composite vapor pressure requirement under paragraph (E)(3)(b)(ii) of this rule:

(i) The name of each cleaning solvent used;

(ii) All data and calculations that demonstrate the cleaning solvent complies with either the water composition requirement or VOC composite vapor pressure requirement; and

(iii) The amount (gallons) of each cleaning solvent used each year, as determined from facility purchase or usage records.

(f) For any enclosed spray gun cleaner subject to paragraph (E)(2)(a)(i) of this rule:

(i) A record or schedule of visual inspections of the seals and other potential sources of leaks;

(ii) For each leak found:

(a) Identification of the type of leak;

(b) Date leak was discovered; and

(c) Date leak was repaired.

(4) Monitoring records for VOC emission control systems.

For a VOC emission control system subject to paragraph (G) of this rule, the owner or operator shall maintain the same monitoring records as specified under paragraph (K)(5) of rule 3745-21-15 of the Administrative Code.

(K) Reporting requirements.

(1) (General) The provisions under paragraph (K) of this rule describe the contents of reports and identify the reporting dates for the following reports:

(a) Initial compliance status.

(b) Semiannual compliance status.

(2) Initial compliance status report.

The owner or operator of an aerospace manufacturing or rework facility subject to this rule shall submit an initial compliance status report within sixty calendar days after the compliance date specified in paragraph (F) of this rule as follows:

(a) For any coating operation subject to the VOC content limit of paragraph (D)(1) of this rule, the owner or operator shall state in the initial compliance status report the type of coating, the VOC content limit for the coating, and that only coatings meeting the applicable VOC content limit are to be employed, unless otherwise controlled pursuant to paragraph (D)(2) of this rule or exempted pursuant to paragraph (D)(3) of this rule.

(b) For any coating that is applied by means of a dip coater, that is subject to the VOC content limit of paragraph (D)(1) of this rule, and that complies by the procedures of paragraph (H)(2) of this rule pertaining to a rolling thirty-day average VOC content, the owner or operator shall state in the initial compliance status report that only coatings meeting the applicable VOC content limit, as determined by the procedures of paragraph (H)(2) of this rule, are to be employed.

(c) For any coating operation that is equipped with a VOC emission control system to comply with paragraph (D)(2) of this rule, the owner or operator shall submit in the initial compliance status report:

(i) Information on the types of coatings to be controlled.

(ii) Identification and description of each monitoring device employed to comply with the requirements of paragraph (G) of this rule.

(iii) The results of compliance tests conducted pursuant to paragraph (I) of this rule to determine the overall control efficiency of the VOC emission control system and the control efficiency of any thermal or catalytic oxidizer within the VOC emission control system.

(iv) A complete test report for any compliance tests of the VOC emission control system.

A complete test report shall include a brief process description, sampling site description, description of sampling and analysis procedures and any modifications to standard procedures, quality assurance procedures, record of operating conditions during the test, record of preparation of standards, record of calibrations, raw data sheets for field sampling, raw data sheets for field and laboratory analyses, documentation of calculations, and any other information required by the test method.

(v) For any compliance tests of the VOC emission control system, the compliance test monitoring data recorded pursuant to paragraph (I)(2) of this rule, including the operating parameter values established for any monitoring device.

(d) For cleaning operations subject to paragraph (E) of this rule, the owner or operator shall submit in the initial compliance status report:

(i) A description of the types of cleaning operations;

(ii) A listing of the cleaning solvents being employed in each cleaning operation; and

(iii) A statement that all cleaning operations are to comply with the applicable requirements under paragraph (E) of this rule.

(3) Semiannual compliance status reports.

The owner or operator of an aerospace manufacturing or rework facility subject to this rule shall submit semiannual compliance status reports no later than thirty calendar days after the end of each six-month period to the appropriate Ohio environmental protection agency district office or local air agency. The first report shall be submitted no later than thirty calendar days after the end of the first six-month period following the compliance date. Subsequent reports shall be submitted no later than thirty calendar days after the end of each six-month period following the first report or no later than thirty calendar days after the end of each six-month period otherwise established within a permit issued for the aerospace manufacturing or rework facility. For each semiannual compliance status report, the owner or operator shall submit the following information for the six-month period covered by the report:

(a) For any coating operation subject to paragraph (D)(1) of this rule, the owner or operator shall state in the semiannual compliance status report any changes to the previous reporting of the types of coatings and the VOC content limits for the coatings.

(b) For any coating that is applied by means of a dip coater and that is subject to the VOC content limit of paragraph (D)(1) of this rule, the owner or operator shall state in the semiannual compliance status report any changes to the previous reporting of procedures for determining the VOC content of the coating.

(c) For any VOC emission control system employed to met paragraph (D)(2) of this rule, any changes to monitoring devices previously reported and required under paragraph (G) of this rule.

(d) If any subsequent compliance tests of the VOC emission control system are conducted during the semiannual reporting period after the initial compliance status report has been submitted, the semiannual compliance status report shall include the results of each compliance test, a complete test report, and the compliance test monitoring data as described under paragraphs (K)(2)(c)(iii) to (K)(2)(c)(v) of this rule.

(e) For cleaning operations subject to paragraph (E) of this rule, the owner or operator shall submit in the semiannual compliance status report any changes to the previous reporting of the description of the types of cleaning operations and the listing of the cleaning solvents employed in each cleaning operation.

(f) Compliance certification for semiannual reporting period.

The owner or operator shall submit with the semiannual compliance status report, the following compliance certifications, where applicable:

(i) For any coating that is subject to a VOC content limit of paragraph (D)(1) of this rule, the compliance certification shall state that only coatings which comply with the applicable VOC content limit have been used each operating day in the semiannual reporting period, or should otherwise identify the periods of use of coatings that did not comply, the reasons for such use of noncompliant coatings, and the amounts and VOC contents of each such noncompliant coating used. Use of a noncompliant coating is a separate violation for each day the noncompliant coating is used.

(ii) For any coating that is applied by means of a dip coater, that is subject to a VOC content limit of paragraph (D)(1) of this rule, and that complies by the procedures of paragraph (H)(2) of this rule, the compliance certification shall state that only coatings which comply with the applicable VOC content limit, as determined by the procedures of paragraph (H)(2) of this rule, have been used each operating day in the semiannual reporting period, or should otherwise identify the periods of use of coatings that did not comply, the reasons for the use

of such noncompliant coatings, and the amounts and VOC contents of each such noncompliant coating used. Use of a noncompliant coating is a separate violation for each day the noncompliant coating is used.

(iii) For any coating operation that is equipped with a VOC emission control system to comply with paragraph (D)(3) of this rule:

(a) The compliance certification shall state that the three-hour block averages of the monitoring parameters recorded pursuant to paragraph (K)(5) of this rule had complied with the operating limits (operating parameter values) for the monitoring parameters established under paragraph (J)(2) of this rule during of all periods of operation of the coating operation in the semiannual reporting period; or should otherwise identify the times and durations of all periods of noncompliance and the reasons for noncompliance.

(b) The compliance certification shall identify the times and durations of all periods during coating operation or control operation when the monitoring device is not working, as recorded pursuant to paragraph (J)(3) of this rule and paragraph (K)(5) of rule 3745-21-15 of the Administrative Code.

(c) For any capture system bypass line, the compliance certification shall identify the times and durations of all periods in which the captured VOC emissions were discharged to atmosphere instead of a control device, as recorded pursuant to paragraph (J)(3) of this rule and paragraph (K)(5)(f) of rule 3745-21-15 of the Administrative Code, and the reasons for the discharges to atmosphere.

(d) The compliance certification shall state that the overall reduction and control of VOC emissions, based on the most recent compliance test conducted in accordance with paragraph (I) of this rule, has met the requirements under paragraph (D)(2) of this rule for each coating designated for control during the semiannual reporting period, or should otherwise identify the periods of noncompliance and the reasons for noncompliance.

(iv) For coatings subject to the low usage exemption under paragraph (D)(3)(e) of this rule, the compliance certification shall state that the usage of these coatings during the semiannual reporting period did not exceed the annual usage restrictions for the calendar year, or should otherwise identify for each noncompliance of any annual usage restriction the reasons for the noncompliant usage and the amounts and VOC contents of the coatings used in the noncompliant usage.

(v) For cleaning operations subject to paragraph (E) of this rule, the compliance certification shall identify for the semiannual reporting period:

(a) Any instance where a noncompliant cleaning solvent is used for a hand wipe cleaning operation that is not exempted under paragraph (E)(1)(b) of this rule;

(b) Any instance where a noncompliant spray gun cleaning method is used;

(c) Any instance where a leaking enclosed spray gun cleaner remains unrepaired and in use for more than fifteen days;

(d) Any other instance of noncompliance with a requirement under paragraph (E) of this rule; and

(e) If the cleaning operations have been in compliance for the semiannual reporting period, a statement that the cleaning operations have been in compliance with the applicable requirements.

(vi) The compliance certification shall identify and describe any corrective actions considered and implemented for any noncompliance being reported in the compliance certification.

(vii) The compliance certification shall be signed by the responsible official of a Title V facility, as defined in OAC rule 3745-77-01 or the signatory authority under OAC rule 3745-31-02 for a facility that is not Title V, that owns or operates the aerospace manufacturing or rework facility.

(L) Requirements on applicability notification and permit application.

(1) The owner or operator of an aerospace manufacturing or rework facility that is subject to this rule and that has an initial startup of coating or cleaning operations before the effective date of this rule shall notify the appropriate Ohio environmental protection agency district office or local air agency in writing that the facility is subject to this rule. The notification, which shall be submitted not later than sixty days after the effective date of this rule, shall provide the following information:

(a) Name and address of the owner or operator;

(b) Address (i.e., physical location) of the facility;

(c) Equipment description and Ohio EPA application number (if assigned) of any coating or cleaning operations;

(d) Identification of the applicable requirements, the means of compliance, and the compliance date for the coating and cleaning operations under this rule;

(e) Regarding a permit for coating and cleaning operations, whichever of the following is applicable;

(i) Submission of an application for a permit-to-operate, modification, or renewal of a permit-to-operate in accordance with paragraph (B) of rule 3745-35-02 of the Administrative Code; or

(ii) Statement of intent to submit an application for a Title V permit or modification of a Title V permit in accordance with rule 3745-77-02 or rule 3745-77-08 of the Administrative Code, respectively.

(2) The owner or operator of an aerospace manufacturing or rework facility that is subject to this rule and that has an initial startup of coating or cleaning operations on or after the effective date of this rule shall notify the appropriate Ohio environmental protection agency district office or local air agency in writing that the facility is subject to this rule. The notification, which shall be submitted not later than either the date of initial startup of the facility's coating or cleaning operations or sixty days after the effective date of this rule (whichever is later), shall provide the information listed under paragraph (L)(1) of this rule. The application for a permit-to-install under rule 3745-31-02 of the Administrative Code may be used to fulfill the notification requirements of this paragraph.

Effective: 08/25/2008

R.C. 119.032 review dates: 08/25/2013

CERTIFIED ELECTRONICALLY
Certification

08/15/2008
Date

Promulgated Under: 119.03
Statutory Authority: 3704.03(E)
Rule Amplifies: 3704.03(E), 3704.03(A)

3745-21-20 **Control of volatile organic emissions from shipbuilding and ship repair operations (marine coatings).**

[Comment: For dates and availability of non-regulatory government publications, publications of recognized organizations and associations, federal rules, and federal statutory provisions referenced in this rule, see the "Incorporation by Reference" paragraph at the end of rule 3745-21-01 of the Administrative Code.]

(A) Applicability.

(1) Except as otherwise provided in paragraph (A)(2) of this rule, this rule shall apply to any facility that meets both of the following conditions:

(a) The facility has shipbuilding or ship repair operations; and

(b) The facility is located in Ashtabula, Cuyahoga, Geauga, Lake, Lorain, Medina, Portage, or Summit county.

(2) Excluded from the requirements of this rule is any facility that has the potential to emit for VOC of less than 25.0 tons per year for all shipbuilding and ship repair operations combined. However, this exclusion is not available for any facility that has, or once had, the potential to emit for VOC of equal to or greater than 25.0 tons per year for all shipbuilding and ship repair operations combined on or after the facility's compliance date specified under paragraph (F) of this rule.

(B) Definitions.

The definitions applicable to this rule are contained in paragraph (BB) of rule 3745-21-01 of the Administrative Code.

(C) Overall requirements for shipbuilding or ship repair operations.

Any owner or operator of shipbuilding or ship repair operations that are subject to this rule shall comply with the requirements of paragraphs (D) to (L) of this rule.

(D) VOC emission limitations for marine coatings.

(1) Except as otherwise provided in paragraphs (D)(2) and (D)(3) of this rule, a person shall not apply any marine coating that contains VOC in excess of the VOC content limits specified in table A of this rule:

-Table A: VOC content limits for marine coatings[a].-

Category of Marine Coating	Pounds of VOC per gallon of coating, excluding water and	Pounds of VOC per gallon of solids, as applied, if the	Pounds of VOC per gallon of solids, as applied, if the

	exempt solvents, as applied	temperature is equal to or greater than forty degrees Fahrenheit	temperature is less than forty degrees Fahrenheit[b]
General use coating	2.8	4.8	6.1
Specialty coating:			
Air flask coating	2.8	4.8	6.1
Antenna coating	4.4	12.0	N/A
Antifoulant coating	3.3	6.4	8.1
Heat resistant coating	3.5	7.0	8.9
High-gloss coating	3.5	7.0	8.9
High-temperature coating	4.2	10.3	13.3
Inorganic zinc (high-build) coating	2.8	4.8	6.1
Interior coating	2.8	4.8	6.1
Military exterior coating	2.8	4.8	6.1
Mist coating	5.1	18.7	N/A
Navigational aids coating	4.6	13.3	N/A
Nonskid coating	2.8	4.8	6.1
Nuclear coating	3.5	7.0	8.9
Organic zinc coating	3.0	5.3	6.7
Pretreatment coating	6.5	92.6	N/A
Repair and maintenance thermoplastic coating	4.6	13.3	N/A
Rubber camouflage coating	2.8	4.8	6.1
Sealant coating for thermal spray aluminum	5.1	18.7	N/A
Special marking coating	4.1	9.8	N/A
Tack coating	5.1	18.7	N/A
Undersea weapons systems coating	2.8	4.8	6.1
Weld-through preconstruction primer	5.4	24.1	N/A

[a] The limits are expressed in two sets of equivalent units in the second and third columns of table A of this rule. Either set of limits may be used for the compliance procedure described in paragraph (H)(4)(a) of this rule, but only the limits expressed in units of pounds of VOC per gallon of solids (non-volatiles) shall be used for the compliance procedures described in paragraphs (H)(4)(b), (H)(4)(c), and (H)(5) of this rule.

[b] The limits in the fourth column of table A of this rule apply during cold-weather time periods, as defined under paragraph (BB) of rule 3745-21-01 of the Administrative Code. Cold-weather allowances are not given to coatings in categories that permit more than a forty per cent VOC content by volume. Such coatings are subject to the limits in second and third columns of the table in this rule regardless of weather conditions.

(2) VOC emission control system for a coating.

In lieu of the VOC content limit for any coating subject to paragraph (D)(1) of this rule, a VOC emission control system shall be used that achieves, for each coating employed and designated for control, an overall reduction of VOC emissions that is equal to or greater than the required overall control efficiency determined in accordance with paragraph (H)(5) of this rule. Also, if the VOC emission control system includes a thermal or catalytic oxidizer, the control efficiency of the thermal or catalytic oxidizer for VOC emissions shall be at least ninety per cent by weight.

(3) The following coating applications are exempt from the VOC content limits listed in paragraph (D)(1) of this rule:

(a) Aerosol coatings

(b) Unsaturated polyester resin (i.e., fiberglass lay-up) coatings (however, coatings applied to suitably prepared fiberglass surfaces for protective or decorative purposes are subject to this rule).

(c) Coatings that meet the following low usage restrictions at the facility:

(i) Total usage of each separate coating formulation does not exceed fifty gallons per rolling twelve month period; and

(ii) Total usage of all such coating formulations combined does not exceed two hundred fifty gallons per rolling twelve month period.

(E) Requirements for handling and transfer of marine coatings and thinners.

Any owner or operator of shipbuilding or ship repair operations shall ensure that:

(1) All handling and transfer of marine coatings and thinners to and from containers, tanks, vats, drums, and piping systems is conducted in a manner that minimizes spills.

(2) All containers, tanks, vats, drums, and piping systems are free of cracks, holes, and other defects and remain closed unless materials are being added to or removed from them.

(F) Compliance dates.

(1) Except where otherwise specified within this rule, any owner or operator of shipbuilding or ship repair operations that are subject to this rule shall comply with the requirements of this rule by no later than the following dates:

(a) For shipbuilding or ship repair operations for which installation commenced before the effective date of this rule, the compliance date is either twelve months after the effective date of this rule or the date of initial startup of the shipbuilding or ship repair operations, whichever is later.

(b) For shipbuilding or ship repair operations for which installation commenced on or after the effective date of this rule, the compliance date is the date of initial startup of the shipbuilding or ship repair operations.

(2) For a VOC emission control system that is used for a coating to comply with paragraph (D)(2) of this rule, the owner or operator shall demonstrate the overall control efficiency of the VOC emission control system and the control efficiency of any thermal or catalytic oxidizer within the VOC emission control system by testing the coating operation and the VOC emission control system in accordance with paragraph (I) of this rule within ninety days after the compliance date of the shipbuilding or ship repair operations.

(3) Additional testing of the coating operation and the VOC emission control system in accordance with paragraph (I) of this rule may be required by the director to ensure continued compliance.

(G) Monitoring requirements for a VOC emission control system.

For a VOC emission control system that is used for a coating to comply with paragraph (D)(2) of this rule, the owner or operator shall meet the same monitoring requirements as contained in paragraph (H) of rule 3745-21-15 of the Administrative Code.

(H) Procedures for the VOC content and solids content of a coating and the determination of required overall control efficiency for controlled coatings.

(1) The VOC content and solids content of a coating shall be determined by the owner or operator in accordance with paragraph (B) of rule 3745-21-10 of the Administrative Code, wherein formulation data or USEPA Method 24 procedures (which include various ASTM measurement methods) may be employed.

(2) For each batch of coating that is received by the facility, the owner or operator shall:

(a) Determine the coating category and the applicable VOC limit as specified under in paragraph (D)(1) of this rule.

(b) Certify the as supplied VOC content of the batch of coating. The owner or operator may use a certification supplied by the manufacturer for the batch, although the owner or operator retains liability should subsequent testing reveal a violation. If the owner or operator performs the certification testing, only one of the containers in which the batch of coating was received is required to be tested.

(3) In lieu of testing each batch of coating, as applied, the owner or operator may determine compliance with the VOC content limits using any combination of the procedures described in paragraphs (H)(4)(a) to (H)(4)(c) of this rule. The procedure used for each coating shall be determined and documented prior to application. However, the results of any compliance demonstration conducted by the owner or operator or any regulatory agency using USEPA Method 24 shall take precedence over the results using the procedures in paragraphs (H)(4)(a), (H)(4)(b), and (H)(4)(c) of this rule.

(4) Compliance procedures for as applied VOC content of coatings.

(a) Coatings to which thinning solvent will not be applied.

For coatings to which thinning solvent (or any other material) will not be added under any circumstance or to which only water is added, the owner or operator shall comply as follows:

(i) Certify the as applied VOC content of each batch of coating.

(ii) Notify the persons responsible for applying the coating that no thinning solvent may be added to the coating by affixing a label to each container of coating in the batch or through another means.

(iii) If the certified as applied VOC content of each batch of coating used during any day is less than or equal to the applicable VOC content limit in paragraph (D)(1) of this rule (either in terms of pounds of VOC per gallon of coating, excluding water and exempt solvents, or pounds of

VOC per gallon of solids), then compliance is demonstrated for each day, unless non compliance is determined using USEPA Method 24.

(b) Coatings to which thinning solvent will be added (coating-by-coating compliance).

For a coating to which thinning solvent is routinely or sometimes added, the owner or operator shall comply as follows:

(i) Prior to the first application of each batch, designate a single thinner for the coating and calculate the maximum allowable thinning ratio (or ratios, if the coating shall comply with the cold-weather limits in addition to the other limits specified in paragraph (D)(1) of this rule for each batch as follows:

$$R = \frac{(V_S)(VOC_{limit}) - m_{VOC}}{D_{th}} \quad \text{Equation 1}$$

where:

R = Maximum allowable thinning ratio for a given batch (gallons of thinner per gallon of coating as supplied);

V_S = Volume fraction of solids in the batch as supplied (gallon of solids per gallon of coating as supplied);

VOC_{limit} = Maximum allowable as-applied VOC content of the coating (pound VOC per gallon of solids);

m_{VOC} = VOC content of the batch as supplied [pounds VOC (including cure volatiles) per gallon of coating (including water and exempt compounds) as supplied]; and

D_{th} = Density of the thinner (pounds per gallon).

If V_S is not supplied directly by the coating manufacturer, the owner or operator shall determine V_S as follows:

$$V_S = 1 - \frac{m_{volatiles}}{D_{avg}} \quad \text{Equation 2}$$

where:

$m_{volatiles}$ = Total volatiles in the batch, including VOC, water, and exempt compounds (pounds of volatiles per gallon of coating); and

D_{avg} = Average density of volatiles in the batch (pounds per gallon).

(ii) Prior to the first application of each batch, notify painters and other persons, as necessary, of the designated thinner and maximum allowable thinning ratio(s) for each batch of the coating by affixing a label to each container of coating or through another means.

(iii) By the fifteenth day of each calendar month, determine the volume of each batch of the coating used, as supplied, during the previous month.

(iv) By the fifteenth day of each calendar month, determine the total allowable volume of thinner for the coating used during the previous month as follows:

$$V_{th} = \sum_{i=1}^{n} (R x V_b)_i + \sum_{i=1}^{n} (R_{cold} x V_{b-cold})_i \quad \text{Equation 3}$$

Where:

V_{th} = Total allowable volume of thinner for the previous month (gallons of thinner);

V_b = Volume of each batch, as supplied and before being thinned, used during non-cold-weather days of the previous month (gallons of coating as supplied);

R_{cold} = Maximum allowable thinning ratio for each batch used during cold-weather days (gallons of thinner per gallon of coating as supplied);

$V_{b\text{-}cold}$ = Volume of each batch, as supplied and before being thinned, used during cold-weather days of the previous month (gallons of coating as supplied);

i = Each batch of coating; and

n = Total number of batches of the coating.

(v) By the fifteenth day of each calendar month, determine the volume of thinner actually used with the coating during the previous month.

(vi) If the volume of thinner actually used with the coating [paragraph (H)(4)(b)(v) of this rule] is less than or equal to the total allowable volume of thinner for the coating [paragraph (H)(4)(b)(iv) of this rule], then compliance is demonstrated for the coating for each operating day of the previous month, unless a violation is revealed using USEPA Method 24.

(c) Coatings to which the same thinning solvent will be added (group compliance).

For coatings to which the same thinning solvent (or other material) is routinely or sometimes added, the owner or operator shall comply as follows:

(i) Designate a single thinner to be added to each coating during the month and "group" coatings according to their designated thinner.

(ii) Prior to the first application of each batch, calculate the maximum allowable thinning ratio (or ratios, if the coating shall comply with the cold-weather limits in addition to the other limits specified in paragraph (D)(1) of this rule) for each batch of coating in the group using the equations in paragraph (H)(4)(b) of this rule.

(iii) Prior to the first application of each "batch," notify painters and other persons, as necessary, of the designated thinner and maximum allowable thinning ratio(s) for each batch in the group by affixing a label to each container of coating or through another means described in the implementation plan specified in paragraph (J)(2)(a) of this rule.

(iv) By the fifteenth day of each calendar month, determine the volume of each batch of the group used, as supplied, during the previous month.

(v) By the fifteenth day of each calendar month, determine the total allowable volume of thinner for the group for the previous month using equation 3 in paragraph (H)(4)(b)(iv)of this rule.

(vi) By the fifteenth day of each calendar month, determine the volume of thinner actually used with the group during the previous month.

(vii) If the volume of thinner actually used with the group [paragraph (H)(4)(c)(vi) of this rule] is less than or equal to the total allowable volume of thinner for the group [paragraph (H)(4)(c)(v) of this rule], then compliance is demonstrated for the group for each operating day of the previous month, unless a violation is revealed using USEPA Method 24.

(d) A violation revealed through any approved test method shall result in a one-day violation for enforcement purposes. A violation revealed through the recordkeeping procedures described in paragraphs (H)(4)(c)(1) to (H)(4)(c)(3) of this rule shall result in a thirty-day violation for enforcement purposes, unless the owner or operator provides sufficient data to demonstrate the specific days during which noncompliant coatings were applied.

(5) Determination of required overall control efficiency for controlled coatings.

For a VOC emission control system that is used to comply with paragraph (D)(2) of this rule, the overall reduction of VOC emissions, that is, the required overall control efficiency (R), expressed in per cent by weight, shall be determined as follows for each coating designated for control:

$$R = [(C-L)/C](100)$$

Where:

C = VOC content of the coating designated for control, in pounds of VOC per pound of solids, as applied; and

L = VOC content limit under paragraph (D)(1) of this rule for the coating designated for control, in pounds of VOC per pound of solids, as applied.

(I) Compliance tests for VOC emission control systems.

(1) For a VOC emission control system used to comply with paragraph (D)(2) of this rule, the owner or operator shall conduct a compliance test to determine the capture efficiency of the capture system, the control efficiency of the control device (or each control device if a combination of control devices is employed), and the overall control efficiency of the VOC emission control system in accordance with paragraph (C) of rule 3745-21-10 of the Administrative Code wherein USEPA Method 25 or 25A shall be used for determining the concentration of VOC in a gas stream.

(2) During the compliance test described in paragraph (I)(1) of this rule that demonstrates compliance, the owner or operator shall establish the operating limits (operating parameter values) for the monitoring devices required under paragraph (G) of this rule by following the same requirements as contained in paragraph (J)(2) of rule 3745-21-15 of the Administrative Code.

(J) Record keeping.

(1) (General) All records specified under paragraph (J) of this rule shall be retained by the owner or operator for a period of not less than five years and shall be

made available to the director or any authorized representative of the director for review during normal business hours. The following types of records are to be maintained by the owner or operator of shipbuilding or ship repair operations subject to this rule:

(a) Compliance demonstration records for coating operations.

(b) Compliance demonstration records for the handling and transfer of marine coatings and thinners.

(c) Monitoring records for VOC emission control systems.

(2) Compliance demonstration records for coating operations.

For any coating operation subject to paragraph (D)(1) of this rule, the owner or operator shall compile the following records on a monthly basis:

(a) A copy of an implementation plan that addresses the coating compliance procedures under paragraph (H) of this rule and the recordkeeping procedures under paragraph (J) of this rule, including the procedures for gathering the necessary data and making the necessary calculations.

(b) For coating formulations elected by the owner or operator as being subject to the low usage restrictions under paragraph (D)(3)(c) of this rule:

(i) The identification and gallons used during the month for each separate coating;

(ii) The total gallons used during the current rolling twelve month period (this month plus the previous eleven months) for each separate coating; and

(iii) The total gallons used during the current rolling twelve month period (this month plus the previous eleven months) for all such coatings combined.

(c) Identification of the coatings used, their appropriate coating categories, and the applicable VOC limit;

(d) Certification of the as-supplied VOC content of each batch of coating;

(e) A determination of whether containers meet the requirements as described in paragraph (E)(2) of this rule;

(f) The results of any USEPA Method 24 measurement test or approved alternative measurement test conducted on individual containers of coating, as applied; and

(g) The records specified under paragraphs (J)(3) and (J)(4) of this rule, where appropriate.

(3) The records required by paragraph (J)(2) of this rule shall include additional information, as determined by the compliance procedures described in paragraph (H)(4) of this rule that each owner or operator followed:

(a) Coatings to which thinning solvent will not be added.

The records maintained by an owner or operator demonstrating compliance using the procedure described in paragraph (H)(4)(a) of this rule shall contain the following information:

(i) Certification of the as-applied VOC content of each batch of coating; and

(ii) The volume of each coating applied.

(b) For coatings to which thinning solvent(s) will be added for coating-by-coating compliance.

The records maintained by an owner or operator demonstrating compliance using the procedure described in paragraph (H)(4)(b) shall contain the following information:

(i) The density and mass fraction of water and exempt compounds of each thinner and the volume fraction of solids (nonvolatiles) in each batch, including any calculations;

(ii) The maximum allowable thinning ratio (or ratios, if the coating operation complies with the cold-weather limits in addition to the other limits specified in paragraph (D)(1) of this rule for each batch of coating, including calculations;

(iii) If an owner or operator chooses to comply with the cold-weather limits, the dates and times during which the ambient temperature at the coating operation was below forty degrees Fahrenheit (4.5 degrees Celsius) at the time the coating was applied and the volume used of each batch of the coating, as supplied, during these dates;

(iv) The volume used of each batch of the coating, as supplied;

(v) The total allowable volume of thinner for each coating, including calculations; and

(vi) The actual volume of thinner used for each coating.

(c) Coatings to which the same thinning solvent will be added for group compliance.

The records maintained by an owner or operator demonstrating compliance using the procedure described in paragraph (H)(4)(c) of this rule shall contain the following information:

(i) The density and mass fraction of water and exempt compounds of each thinner and the volume fraction of solids in each batch, including any calculations;

(ii) The maximum allowable thinning ratio (or ratios, if the coating operation complies with the cold-weather limits in addition to the other limits specified in paragraph (D)(1) of this rule) for each batch of coating, including calculations;

(iii) If an owner or operator chooses to comply with the cold-weather limits, the dates and times during which the ambient temperature at the coating operation was below forty degrees Fahrenheit (4.5 degrees Celsius) at the time the coating was applied and the volume used of each batch in the group, as supplied, during these dates;

(iv) Identification of each group of coatings and their designated thinners;

(v) The volume used of each batch of coating in the group, as supplied;

(vi) The total allowable volume of thinner for the group, including calculations; and

(vii) The actual volume of thinner used for the group.

(4) For any coating operation controlled by a VOC emission control system to meet paragraph (D)(2) of this rule, the owner or operator shall maintain the following records:

(a) Documentation on the overall control efficiency of the VOC emission control system and the control efficiency of any thermal or catalytic oxidizer within the VOC emission control system, including design estimates and the results of compliance tests conducted pursuant to paragraphs (F)(2), (F)(3), and (I) of this rule.

(b) The following records on a monthly basis for any coating controlled by the VOC emission control system:

(i) The identification of the coating, and the dates (or time periods) of control.

(ii) For controlled coatings to which the owner or operator does not add thinning solvents, the owner or operator shall record the certification of the as supplied and as applied VOC content of each batch and the volume of each coating applied.

(iii) For controlled coatings to which the owner or operator adds thinning solvent on a coating-by-coating basis, the owner or operator shall record all of the information required to be recorded by paragraph (J)(3)(b) of this rule.

(iv) For controlled coatings to which the owner or operator adds thinning solvent on a group basis, the owner or operator shall record all of the information required to be recorded by paragraph (J)(3)(c) of this rule.

(c) The monitoring records specified under paragraph (K)(6) of this rule.

(5) Compliance demonstration records for the handling and transfer of marine coatings and thinners.

For the handling and transfer of marine coatings and thinners, the owner or operator shall maintain the following records on a monthly basis:

(a) A copy of an implementation plan that addresses the procedures for ensuring compliance with the requirements for handling and transfer of marine coatings and thinners under paragraph (E) of this rule; and

(b) A determination on whether the requirements as described in paragraph (E)(2) of this rule are being met.

(6) Monitoring records for VOC emission control systems.

For a VOC emission control system that is employed to meet paragraph (D)(2) of this rule, the owner or operator shall maintain the same monitoring records as specified under paragraph (K)(5) of rule 3745-21-15 of the Administrative Code.

(K) Reporting requirements.

(1) (General) The provisions under paragraph (K) of this rule describe the contents of reports and identify the reporting dates for the following reports:

(a) Initial compliance status report; and

(b) Semiannual compliance status reports.

(2) Initial compliance status report.

The owner or operator of shipbuilding or ship repair operations subject to this rule shall submit an initial compliance status report within sixty calendar days after the compliance date specified in paragraph (F) of this rule as follows:

(a) For any coating operation subject to the VOC content limit of paragraph (D)(1) of this rule, the owner or operator shall state in the initial compliance status report the type of coating, the VOC content limit for the coating, and that only coatings meeting the applicable VOC content limit are to be employed, unless otherwise controlled pursuant to paragraph (D)(2) of this rule or exempted pursuant to paragraph (D)(3) of this rule.

(b) For the handling and transfer of marine coatings and thinners, the owner or operator shall provide an implementation plan that addresses the procedures for ensuring compliance with the requirements under paragraph (E) of this rule.

(c) For any coating operation that is equipped with a VOC emission control system to comply with paragraph (D)(2) of this rule, the owner or operator shall submit in the initial compliance status report:

(i) Information on the types of coatings to be controlled.

(ii) Identification and description of each monitoring device employed to comply with the requirements of paragraph (G) of this rule.

(iii) The results of compliance tests conducted pursuant to paragraph (I) of this rule to determine the overall control efficiency of the VOC emission control system and the control efficiency of any thermal or catalytic oxidizer within the VOC emission control system.

(iv) A complete test report for any compliance tests of the VOC emission control system.

A complete test report shall include a brief process description, sampling site description, description of sampling and analysis procedures and any modifications to standard procedures, quality assurance procedures, record of operating conditions during the test, record of preparation of standards, record of calibrations, raw data sheets for field sampling, raw data sheets for field and laboratory

analyses, documentation of calculations, and any other information required by the test method.

(v) For any compliance tests of the VOC emission control system, the compliance test monitoring data recorded pursuant to paragraph (I)(2) of this rule, including the operating parameter values established for any monitoring device.

(3) Semiannual compliance status reports.

The owner or operator of shipbuilding or ship repair operations subject to this rule shall submit semiannual compliance status reports no later than thirty calendar days after the end of each six month period to the appropriate Ohio environmental protection agency district office or local air agency. The first report shall be submitted no later than thirty calendar days after the end of the first six month period following the compliance date. Subsequent reports shall be submitted no later than thirty calendar days after the end of each six month period following the first report or no later than thirty calendar days after the end of each six month period otherwise established within a permit issued for the shipbuilding or ship repair operations. For each semiannual compliance status report, the owner or operator shall submit the following information for the six month period covered by the report:

(a) For any coating operation subject to paragraph (D)(1) of this rule, the owner or operator shall state in the semiannual compliance status report any changes to the previous reporting of the types of coatings and the VOC content limits for the coatings.

(b) For the handling and transfer of marine coatings and thinners, the owner or operator shall provide any change to the implementation plan identified in paragraph (K)(2)(b) of this rule that addresses the procedures for ensuring compliance with the requirements under paragraph (E) of this rule.

(c) For any VOC emission control system employed to meet paragraph (D)(2) of this rule, any changes to monitoring devices previously reported and required under paragraph (G) of this rule.

(d) If any subsequent compliance tests of the VOC emission control system are conducted during the semiannual reporting period after the initial compliance status report has been submitted, the semiannual compliance status report shall include the results of each compliance test, a complete test report, and the compliance test monitoring data as described under paragraphs (K)(2)(c)(iii) to (K)(2)(c)(v) of this rule.

(e) The owner or operator shall submit with the semiannual compliance status report, the following compliance certifications, where applicable:

(i) For any coating that is subject to a VOC content limit of paragraph (D)(1) of this rule, the compliance certification shall state that only coatings that comply with the applicable VOC content limit have been used each operating day in the semiannual reporting period, or should otherwise identify the periods of use of coatings that did not comply, the reasons for such use of noncompliant coatings, and the amounts and VOC contents of each such noncompliant coating used. Use of a noncompliant coating is a separate violation for each day the noncompliant coating is used.

(ii) For the handling and transfer of marine coatings and thinners, the owner or operator provide any changes to the implementation plan that addresses the procedures for ensuring compliance with the requirements under paragraph (E) of this rule and shall submit information on any deviations from the implementation plan or the requirements of paragraph (E) of this rule.

(iii) For any coating operation that is equipped with a VOC emission control system to comply with paragraph (D)(3) of this rule:

(a) The compliance certification shall state that the three-hour three hour block averages of the monitoring parameters recorded pursuant to paragraph (K)(5) of this rule had complied with the operating limits (operating parameter values) for the monitoring parameters established under paragraph (J)(2) of this rule during of all periods of operation of the coating operation in the semiannual reporting period; or should otherwise identify the times and durations of all periods of noncompliance and the reasons for noncompliance.

(b) The compliance certification shall identify the times and durations of all periods during coating operation or control operation when the monitoring device is not working, as recorded pursuant to paragraph (J)(3) of this rule and paragraph (K)(5) of rule 3745-21-15 of the Administrative Code.

(c) For any capture system bypass line, the compliance certification shall identify the times and durations of all periods in which the captured VOC emissions were discharged to atmosphere instead of a control device, as recorded pursuant to paragraph (J)(3) of this rule and paragraph (K)(5)(f) of rule 3745-21-15 of the Administrative Code, and the reasons for the discharges to atmosphere.

(iv) The compliance certification shall state that the overall reduction and control of VOC emissions, based on the most recent compliance test conducted in accordance with paragraph (I) of this rule, has met the requirements under paragraph (D)(2) of this rule for each coating designated for control during the semiannual reporting period, or should otherwise identify the periods of noncompliance and the reasons for noncompliance.

(v) For coatings subject to the low usage exemption under paragraph (D)(3)(c) of this rule, the compliance certification shall state that the usage of these coatings during the semiannual reporting period did not exceed the usage restrictions, or should otherwise identify for each noncompliance of any usage restriction the reasons for the noncompliant usage and the amounts and VOC contents of the coatings used in the noncompliant usage.

(vi) The compliance certification shall identify and describe any corrective actions considered and implemented for any noncompliance being reported in the compliance certification.

(vii) The compliance certification shall be signed by the responsible official of a Title V facility, as defined in OAC rule 3745-77-01 or the signatory authority under OAC rule 3745-31-02 for a facility that is not Title V, that owns or operates the shipbuilding or ship repair operations.

(L) Requirements on applicability notification and permit application.

(1) The owner or operator of shipbuilding or ship repair operations that are subject to this rule and that have an initial startup of shipbuilding or ship repair operations before the effective date of this rule shall notify the appropriate Ohio environmental protection agency district office or local air agency in writing that the facility is subject to this rule. The notification, which shall be submitted not later than sixty days after the effective date of this rule, shall provide the following information:

(a) Name and address of the owner or operator;

(b) Address (i.e., physical location) of the facility;

(c) Equipment description and Ohio EPA application number (if assigned) of any coating operations;

(d) Identification of the applicable requirements, the means of compliance, and the compliance date for the coating operations under this rule; and

(e) Regarding a permit for coating operations, whichever of the following is applicable;

(i) Submission of an application for a permit-to-operate, modification, or renewal of a permit-to-operate in accordance with paragraph (B) of rule 3745-35-02 of the Administrative Code; or

(ii) Statement of intent to submit an application for a Title V permit or modification of a Title V permit in accordance with rule 3745-77-02 or rule 3745-77-08 of the Administrative Code, respectively.

(2) The owner or operator of shipbuilding or ship repair operations that are subject to this rule and that have an initial startup of shipbuilding or ship repair operations on or after the effective date of this rule shall notify the appropriate Ohio environmental protection agency district office or local air agency in writing that the facility is subject to this rule. The notification, which shall be submitted not later than either the date of initial startup of the facility's coating operations or sixty days after the effective date of this rule (whichever is later), shall provide the information listed under paragraph (L)(1) of this rule. The application for a permit-to-install under rule 3745-31-02 of the Administrative Code may be used to fulfill the notification requirements of this paragraph.

Effective: 08/25/2008

R.C. 119.032 review dates: 08/25/2013

CERTIFIED ELECTRONICALLY
Certification

08/15/2008
Date

Promulgated Under: 119.03
Statutory Authority: 3704.03(E)
Rule Amplifies: 3704.03(E), 3704.03(A)

3745-21-21 **Storage of volatile organic liquids in fixed roof tanks and external floating roof tanks.**

[Comment: For dates of non-regulatory government publications, publications of recognized organizations and associations, federal rules, and federal statutory provisions referenced in this rule, see paragraph (JJ) of rule 3745-21-01 of the Administrative Code titled "Reference to materials."]

(A) Applicability.

The requirements of this rule shall apply to any storage tank that meets all of the following criteria:

(1) Tanks that store volatile organic liquids;

(2) The tank is located in Ashtabula, Cuyahoga, Geauga, Lake, Lorain, Medina, Portage, or Summit county; and

(3) The facility has a combined total potential to emit for VOC emissions equal to or greater than one hundred tons of VOCs per calendar year on or after May 27, 2005, from all of the following:

(a) All volatile organic liquid storage tanks;

(b) All non-CTG sources; and

(c) Unregulated emissions from CTG sources.

(B) The definitions applicable to this rule are contained in paragraphs (B) and (E) of rule 3745-21-01 of the Administrative Code.

(C) Storage of volatile organic liquids in fixed roof tanks.

(1) Except where exempted under paragraph (C)(5) of this rule, no owner or operator of a fixed roof tank shall place, store, or hold any volatile organic liquid with a maximum true vapor pressure which is greater than 0.75 pounds per square inch absolute, but less than 11.1 pounds per square inch absolute, in any such tank, after the date specified in paragraph (G) of this rule, unless such tank is designed or equipped with one of the following vapor control systems:

(a) An internal floating roof meeting the requirements of paragraph (C)(3) of this rule; or:

(b) A closed vent system and control device meeting the requirements of paragraph (C)(4) of this rule.

(2) Except where exempted under paragraph (C)(5) of this rule, no owner or operator of a fixed roof tank shall place, store, or hold any volatile organic liquid with a maximum true vapor pressure which is equal to or greater than 11.1 pounds per square inch absolute, in any such tank, after the date specified in paragraph (G) of this rule, unless such tank is designed or equipped with a closed vent system and control device meeting the requirements of paragraph (C)(4) of this rule.

(3) If the fixed roof tank is equipped with an internal floating roof, the following requirements and specifications shall be met:

(a) The internal floating roof shall rest or float on the liquid surface (but not necessarily in complete contact with it) inside a storage vessel that has a fixed roof. The internal floating roof shall float on the liquid surface at all times, except during initial fill and during those intervals when the storage vessel is completely emptied or subsequently emptied and refilled. When the roof is resting on the leg supports, the process of filling, emptying, or refilling shall be continuous and shall be accomplished as rapidly as possible.

(b) Each internal floating roof shall be equipped with one of the following closure devices between the wall of the storage vessel and the edge of the internal floating roof:

(i) A foam or liquid-filled seal mounted in contact with the liquid (liquid-mounted seal). A liquid-mounted seal means a foam or liquid-filled seal mounted in contact with the liquid, between the wall of the storage vessel and the floating roof, and extending continuously around the circumference of the tank.

(ii) Two seals mounted one above the other, so that each forms a continuous closure that completely covers the space between the wall of the storage vessel and the edge of the internal floating roof. The lower seal may be vapor-mounted, but both must be continuous.

(iii) A mechanical shoe seal. A mechanical shoe seal is a metal sheet held vertically against the wall of the storage vessel by springs or weighted levers and is connected by braces to the floating roof. A flexible coated fabric (envelope) spans the annular space between the metal sheet and the floating roof.

(c) Automatic bleeder vents shall be equipped with a gasket and are to be closed at all times when the roof is floating except when the roof is being floated off or is being landed on the roof leg supports. Rim space vents shall be equipped with a gasket and are to be set to open only when the internal floating roof is not floating or at the manufacturer's recommended setting.

(d) Each opening in a non-contact internal floating roof, except for automatic bleeder vents (vacuum breaker vents) and the rim space vents, shall provide a projection below the liquid surface.

(e) Each opening in the internal floating roof, except for leg sleeves, automatic bleeder vents, rim space vents, column wells, ladder wells, sample wells, and stub drains, shall be equipped with a cover or lid which shall be maintained in a closed position at all times (i.e., no visible gap) except when the device is in actual use. The cover or lid shall be equipped with a gasket. Covers on each access hatch and automatic gauge float well shall be bolted except when they are in use.

(f) The sample well, which penetrates the internal floating roof for the purpose of sampling, shall have a slit fabric cover that covers at least ninety per cent of the opening.

(g) Each penetration of the internal floating roof that allows for passage of a ladder shall have a gasketed sliding cover.

(h) Inspection requirements.

The owner or operator of each storage vessel equipped with an internal floating roof, shall comply with the following inspection requirements:

(i) Visually inspect the internal floating roof, the primary seal, and the secondary seal (if one is in service), prior to filling the storage vessel with a volatile organic liquid. If there are holes, tears, or other openings in the primary seal, the secondary seal, or the seal fabric, or defects in the internal floating roof, or both, the owner or operator shall repair the items before filling the storage vessel.

(ii) For vessels equipped with a liquid-mounted or mechanical shoe primary seal, visually inspect the internal floating roof and the primary seal or the secondary seal (if one is in service) through manholes and roof hatches on the fixed roof at least once every twelve months after initial fill. If the internal floating roof is not resting on the surface of the volatile organic liquid inside the storage vessel, or there is liquid accumulated on the roof, or the seal is detached, or there are holes or tears in the seal fabric, the owner or operator shall repair the items or empty and remove the storage vessel from service within forty-five days. If a failure that is detected during inspections required in this paragraph cannot be repaired within forty-five days and if the vessel cannot be emptied within forty-five days, a thirty-day extension may be requested from the director in the inspection report required in paragraph (C)(3)(j)(iii) of this rule. Such a request for an extension must document that alternate storage capacity is unavailable and specify a schedule of actions the company will take that will ensure that

the control equipment will be repaired or the vessel will be emptied within thirty days.

(iii) For vessels equipped with both primary and secondary seals:

(a) Visually inspect the vessel as specified in paragraph (C)(3)(h)(iv) of this rule at least every five years; or

(b) Visually inspect the vessel at least once every twelve months as specified in paragraph (C)(3)(h)(ii) of this rule.

(iv) Visually inspect the internal floating roof, the primary seal, the secondary seal (if one is in service), gaskets, slotted membranes and sleeve seals (if any) each time the storage vessel is emptied and degassed. If the internal floating roof has defects, the primary seal has holes, tears, or other openings in the seal or the seal fabric, or the secondary seal has holes, tears, or other openings in the seal or the seal fabric, or the gaskets no longer close off the liquid surfaces from the atmosphere, or the slotted membrane has more than ten per cent open area, the owner or operator shall repair the items as necessary so that none of the conditions specified in this paragraph exist before refilling the storage vessel with a volatile organic liquid. In no event shall inspections conducted in accordance with this provision occur at intervals greater than ten years in the case of vessels conducting the annual visual inspection as specified in paragraphs (C)(3)(h)(ii) and (C)(3)(h)(iii)(b) of this rule and at intervals no greater than five years in the case of vessels specified in paragraph (C)(3)(h)(iii)(a) of this rule.

(i) Notify the director in writing at least thirty days prior to the filling or refilling of each storage vessel for which an inspection is required by paragraphs (C)(3)(h)(i) and (C)(3)(h)(iv) of this rule to afford the director or the director's authorized designee the opportunity to have an observer present. If the inspection required by paragraph (C)(3)(h)(iv) of this rule is not planned and the owner or operator could not have known about the inspection thirty days in advance of refilling the tank, the owner or operator shall notify the director at least seven days prior to the refilling of the storage vessel. Notification shall be made by telephone immediately followed by written documentation demonstrating why the inspection was unplanned. Alternatively, this notification including the written documentation may be made in writing and sent by express mail so that it is received by the director at least seven days prior to the refilling.

(j) Record keeping and reporting requirements.

The owner or operator of each storage vessel equipped with an internal floating roof shall keep records and furnish reports in accordance with the following:

(i) Furnish the director with a report that describes the control equipment and certifies that the control equipment meets the specifications of paragraph (C) of this rule. This report shall be submitted in accordance with the requirements specified in paragraph (H) of this rule.

(ii) Keep a record of each inspection performed as required by paragraphs (C)(3)(h)(i) to (C)(3)(h)(iv) of this rule. Each record shall identify the storage vessel for which the inspection was performed and shall contain the date the vessel was inspected and the observed condition of each component of the control equipment (seals, internal floating roof, and fittings).

(iii) If any of the conditions described in paragraph (C)(3)(h)(ii) of this rule are detected during the annual visual inspection required by paragraph (C)(3)(h)(ii) of this rule, a report shall be furnished to the director within thirty days of the inspection. Each report shall identify the storage vessel, the nature of the defects, and the date the storage vessel was emptied or the nature of and date the repair was made.

(k) After each inspection required by paragraph (C)(3)(h)(iii) of this rule that finds holes or tears in the seal or seal fabric, or defects in the internal floating roof, or other control equipment defects listed in paragraph (C)(3)(h)(ii) or (C)(3)(h)(iv) of this rule, a report shall be furnished to the director within thirty days of the inspection. The report shall identify the storage vessel and the reason it did not meet the specifications of paragraph (C)(3) of this rule and list each repair made.

(l) The owner or operator shall keep copies of all reports and records required by paragraph (C)(3)(j) of this rule for at least five years.

(4) If the fixed roof tank is equipped with a closed vent system and control device, as required by paragraph (C)(1)(b) or (C)(2) of this rule, the following specifications shall be met:

(a) The closed vent system shall be designed to collect all VOC vapors and gases discharged from the storage vessel and operated with no detectable emissions, as indicated by an instrument reading of less than five hundred parts per million above background and visual inspections, as determined by the methods specified in 40 CFR 60.485(c).

(b) If a control device other than a flare is employed, the control device shall be designed and operated to reduce inlet VOC emissions by ninety five per cent or greater. The control efficiency shall be determined in accordance with paragraph (C) of rule 3745-21-10 of the Administrative Code.

(c) If a flare is used as the control device, it shall meet the specifications described in the general control device requirements specified in 40 CFR 60.18.

(d) The owner or operator of each tank that is equipped with a closed vent system and control device other than a flare, to meet the control requirements as required in paragraph (C)(4) of this rule, shall meet the specifications identified in paragraphs (C)(4)(a) and (C)(4)(b) of this rule and shall submit, for approval by the director, an operating plan containing the information listed below:

(i) Documentation demonstrating that the control device will achieve the required control efficiency during maximum loading conditions. This documentation is to include a description of the gas stream which enters the control device, including flow and VOC content under varying liquid level conditions (dynamic and static) and manufacturer's design specifications for the control device. If the control device or the closed vent capture system receives vapors, gases, or liquids other than fuels from sources that are not designated sources under this rule, the efficiency demonstration is to include consideration of all vapors, gases, and liquids received by the closed vent capture system and control device. If an enclosed combustion device with a minimum residence time of 0.75 seconds and a minimum temperature of eight hundred sixteen degrees centigrade is used to meet the ninety-five per cent control requirement, documentation that those conditions will exist during all loading conditions is sufficient to meet the requirements of this paragraph.

(ii) A description of the parameter or parameters to be monitored to ensure that the control device will be operated in conformance with its design and an explanation of the criteria used for selection of that parameter (or parameters).

(e) Operate the closed vent system and control device and monitor the parameters of the closed vent system and control device in accordance with the operating plan submitted to the director in accordance with paragraph (C)(4)(d) of this rule, unless the plan was modified by the director during the review process, in which case, the modified plan applies. The operating plan required by paragraph (C)(4)(d) of this rule shall be maintained by the owner or operator for the life of the control equipment and shall be made available to the director upon request.

(f) Any approval granted by the director in accordance with paragraph (C)(4)(d) of this rule must be approved by the USEPA as a revision of the Ohio state implementation plan.

(g) The owner or operator of each source that is equipped with a closed vent system and a flare, to meet the control requirements in paragraphs (C)(4)(a) and (C)(4)(c) of this rule, shall meet the requirements as specified in the general control device requirements of 40 CFR 60.18(e) and (f).

(h) Monitoring, record keeping and reporting requirements.

(i) After installing control equipment in accordance with paragraph (C)(1)(b) or (C)(2) of this rule (closed vent system and control device other than a flare), the owner or operator shall keep the following records:

(a) A copy of the operating plan; and

(b) A record of the measured values of the parameters monitored in accordance with paragraph (C)(4)(e) of this rule.

(ii) After installing a closed vent system and flare to comply with the control requirements of paragraph (C)(1)(b) or (C)(2) of this rule, the owner or operator shall meet the following requirements:

(a) A report containing the measurements required by 40 CFR 60.18(f)(1) to (f)(6), shall be furnished to the director as required by 40 CFR 60.8. This report shall be submitted within six months of the initial start-up date of the flare.

(b) Records shall be kept of all periods of operation during which the flare pilot flame is absent.

(c) Semiannual reports of all periods of time recorded under paragraph (C)(4)(h)(ii)(b) of this rule during which the pilot flame was absent shall be furnished to the director. These reports shall be submitted to the appropriate Ohio environmental protection agency district office or local air agency by July fifteenth and January fifteenth of each calendar year and shall cover the previous six-month period.

(i) The owner or operator shall keep copies of all reports and records required by paragraph (C)(4)(h) of this rule for at least five years.

(5) A fixed roof tank with a capacity less than forty thousand gallons is exempt from the requirements of paragraphs (C)(1) and (C)(2) of this rule.

(D) Storage of volatile organic liquids in external floating roof tanks.

(1) Except where exempted under paragraph (D)(2) of this rule, no owner or operator of an external floating roof tank shall place, store, or hold any volatile organic liquid in any such tank, after the date specified in paragraph (F) of this rule, unless:

(a) Each external floating roof is equipped with a closure device between the wall of the storage vessel and the roof edge. The closure device is to consist of two seals, one above the other. The lower seal is referred to as the primary seal, and the upper seal is referred to as the secondary seal.

(i) Except as provided in paragraph (D)(3)(c) of this rule, the primary seal shall completely cover the annular space between the edge of the floating roof and tank wall and shall be either a liquid mounted seal or a shoe seal.

(ii) The secondary seal shall completely cover the annular space between the external floating roof and the wall of the storage vessel in a continuous fashion, except as allowed in paragraph (D)(3)(c) of this rule.

(iii) The tank shall be equipped with the closure device that meets the requirements of this rule after the next scheduled tank cleaning, but no later than the date specified in paragraph (G) of this rule.

(b) Except for automatic bleeder vents and rim space vents, each opening in a non-contact external floating roof shall provide a projection below the liquid surface. Except for automatic bleeder vents, rim space vents, roof drains, and leg sleeves, each opening in the roof is to be equipped with a gasketed cover, seal, or lid that is to be maintained in a closed position at all times (i.e., no visible gap) except when the device is in actual use. Automatic bleeder vents are to be closed at all times when the roof is floating except when the roof is being floated off or is being landed on the roof leg supports. Rim vents are to be set to open when the roof is being floated off the roof leg supports or at the manufacturer's recommended setting. Automatic bleeder vents and rim space vents are to be gasketed. Each emergency roof drain is to be provided with a slotted membrane fabric cover that covers at least ninety percent of the area of the opening.

(c) The roof shall be floating on the liquid at all times (i.e., off the roof leg supports) except when the tank is completely emptied and subsequently refilled. The process of filling, emptying, or refilling when the roof is resting on the leg supports shall be continuous and shall be accomplished as rapidly as possible.

(2) The following external floating roof tanks shall be exempted from the requirements of paragraph (D)(1) of this rule:

(a) Any tank that has a capacity of less than forty thousand gallons; or

(b) Any tank that contains a volatile organic liquid which, as stored, has a maximum true vapor pressure less than 0.75 pounds per square inch absolute.

(3) Inspection and measurement requirements.

The owner or operator of an external floating roof tank shall:

(a) Determine the gap areas and maximum gap widths between the primary seal and the wall of the storage vessel and between the second seal and the wall of the storage vessel according to the following frequency:

(i) Measurements of gaps between the tank wall and the primary seal (seal gaps) shall be performed during the hydrostatic testing of the vessel or within sixty days of the initial fill with a volatile organic liquid and at least every five years thereafter;

(ii) Measurements of gaps between the tank wall and the secondary seal shall be performed within sixty days of the initial fill with a volatile organic liquid and at least once per year thereafter; and

(iii) If any source ceases to store a volatile organic liquid for a period of one year or more, subsequent introduction of a volatile organic liquid into the vessel shall be considered an initial fill for the purposes of paragraphs (D)(3)(a)(i) and (D)(3)(a)(ii) of this rule.

(b) Determine gap widths and areas in the primary and secondary seals individually according to the following procedures:

(i) Measure the seal gaps, if any, at one or more floating roof levels when the roof is floating off the roof leg supports.

(ii) Measure the seal gaps around the entire circumference of the tank, in each place where a one-eighth inch diameter uniform probe passes freely (without forcing or binding against the seal) between the seal and the wall of the storage vessel, and measure the circumferential distance of each such location.

(iii) The total surface area of each gap described in paragraph (D)(b)(ii) of this rule shall be determined by using probes of various widths to measure accurately the actual distance from the tank wall to the seal and then multiplying each such width by its respective circumferential distance.

(iv) Add the gap surface area of each gap location for the primary seal and the secondary seal individually and divide the sum for each by the nominal diameter of the tank and compare each ratio to the respective standards in paragraph (D)(3)(c)(i) or (D)(3)(c)(ii) of this rule.

(c) Make necessary repairs or empty the storage vessel within forty-five days of identification in any inspection for seals not meeting the following requirements:

(i) The accumulated area of gaps between the tank wall and the mechanical shoe or liquid-mounted primary seal shall not exceed 10.0 square inches per foot of tank diameter, and the width of any portion of any

gap shall not exceed 1.5 inches. There are to be no holes, tears, or other openings in the shoe, seal fabric, or seal envelope.

(ii) The secondary seal is to meet the following requirements:

(a) The secondary seal is to be installed above the primary seal so that it completely covers the space between the roof edge and the tank wall except as provided in paragraph (D)(3)(c)(ii)(b) of this rule.

(b) The accumulated area of gaps between the tank wall and the secondary seal used in combination with a metallic shoe or liquid-mounted primary seal shall not exceed 1.0 square inches per foot of tank diameter, and the width of any portion of any gap shall not exceed 0.5 inches. There shall be no gaps between the tank wall and the secondary seal when used in combination with a vapor mounted primary seal.

(c) There are to be no holes, tears, or other openings in the seal or seal fabric.

If a failure that is detected during inspections required in paragraph (D)(3)(a) of this rule cannot be repaired within forty-five days and if the vessel cannot be emptied within forty-five days, a thirty-day extension may be requested from the director in the inspection report required in paragraph (D)(4)(d) of this rule. Such extension request must include a demonstration of unavailability of alternative storage capacity and a specification of a schedule that will assure that the control equipment will be repaired or the vessel will be emptied as soon as possible.

(d) Notify the director thirty days in advance of any gap measurements required by paragraph (D)(3)(a) of this rule to afford the director the opportunity to have an observer present.

(e) Visually inspect the external floating roof, the primary seal, secondary seal, and fittings each time the vessel is emptied and degassed.

(i) If the external floating roof has defects, the primary seal has holes, tears, or other openings in the seal or the seal fabric, or the secondary seal has holes, tears, or other openings in the seal or the seal fabric, the owner or operator shall repair the items as necessary so that none of the conditions specified in this paragraph exist before filling or refilling the storage vessel with a volatile organic liquid.

(ii) For all the inspections required by paragraph (D)(3)(e) of this rule, the owner or operator shall notify the director in writing at least thirty days prior to the filling or refilling of each storage vessel to afford the director or the director's authorized designee the opportunity to inspect the storage vessel prior to refilling. If the inspection required by

paragraph (D)(3)(e) of this rule is not planned and the owner or operator could not have known about the inspection thirty days in advance of refilling the tank, the owner or operator shall notify the director at least seven days prior to the refilling of the storage vessel. Notification shall be made by telephone immediately followed by written documentation demonstrating why the inspection was unplanned. Alternatively, this notification including the written documentation may be made in writing and sent by express mail so that it is received by the director at least seven days prior to the refilling.

(4) Record keeping and reporting requirements.

The owner or operator of an external floating roof tank shall meet the following record keeping and reporting requirements:

(a) Furnish the director with a report that describes the control equipment and certifies that the control equipment meets the specifications of paragraphs (D)(1) and (D)(3) of this rule. This report shall be submitted in accordance with the requirements specified in paragraph (H) of this rule.

(b) Keep a record of each gap measurement performed as required by paragraphs (D)(3)(a) and (D)(3)(b) of this rule. Each record shall identify the storage vessel in which the measurement was performed and shall contain:

(i) The date of measurement;

(ii) The raw data obtained in the measurement; and

(iii) The calculations described in paragraph (D)(3)(b) of this rule.

(c) Within sixty days of performing the seal gap measurements required by paragraph (D)(3)(a) of this rule, furnish the director with a report that contains:

(i) The date of measurement;

(ii) The raw data obtained in the measurement; and

(iii) The calculations described in paragraph (D)(3)(b) of this rule.

(d) After each seal gap measurement that detects gaps exceeding the limitations specified by paragraph (D)(3)(c) of this rule, submit a report to the director within thirty days of the inspection. The report shall identify the vessel and contain the information specified in paragraph (D)(4)(c) of this rule, the date the vessel was emptied or the repairs made, and the date(s) of the repairs.

(E) Record keeping requirements for fixed roof tanks and external floating roof tanks storing volatile organic liquids.

(1) Any owner or operator of a fixed roof or an external floating roof tank that is not exempted pursuant to paragraph (C)(5) or (D)(2) of this rule shall maintain records of the following information in a readily accessible location for at least five years and shall make copies of the records available to the director upon verbal or written request:

(a) The types of volatile organic liquids stored in the tank;

(b) The maximum true vapor pressure (pounds per square inch absolute), as stored, of each liquid that has a maximum true vapor pressure greater than 0.5 pounds per square inch absolute; and

(c) The dimension and volume of each tank.

(2) The owner or operator of each storage vessel that is exempt pursuant to paragraph (C)(5) or (D)(2) of this rule shall maintain records of the following information in a readily accessible location for at least five years and shall make copies of the records available to the director upon verbal or written request:

(a) The dimension of the storage vessel; and

(b) An analysis of the capacity of the storage vessel

Each storage vessel with a design capacity less than forty thousand gallons is subject to no provisions of this rule other than those required by maintaining readily accessible records of the dimensions of the storage vessel and analysis of the capacity of the storage vessel.

(3) If an owner or operator places, stores, or holds in a fixed roof tank or an external floating roof tank, that is not exempted pursuant to paragraph (C)(5) or (D)(2) of this rule, any volatile organic liquid with a true vapor pressure which is greater than 0.75 pounds per square inch absolute and such tank does not comply with the requirements of paragraph (C)(1), (C)(2), or (D)(1) of this rule, the owner or operator shall so notify the director within thirty days of becoming aware of the occurrence.

(4) The owner or operator shall keep copies of all reports and records required by paragraphs (C)(3)(j), (C)(4)(h), (D)(4), and (I) of this rule for at least five years.

(F) Monitoring requirements for volatile organic liquid operations.

(1) Except as provided in paragraph (F)(4) of this rule, the owner or operator of each storage vessel with a design capacity greater than or equal to forty thousand gallons storing a liquid with a maximum true vapor pressure that is normally less than 0.75 pounds per square inch absolute shall notify the director within

thirty days when the maximum true vapor pressure of the liquid exceeds 0.75 pounds per square inch absolute.

(2) Available data on the storage temperature may be used to determine the maximum true vapor pressure.

(a) For liquids in vessels operated above or below ambient temperatures, the maximum true vapor pressure is calculated based upon the highest expected calendar-month average of the storage temperature. For vessels operated at ambient temperatures, the maximum true vapor pressure is calculated based upon the maximum local monthly average ambient temperature as reported by the national weather service.

(b) For other liquids, the vapor pressure:

(i) Determined by ASTM method D2879-97(2007);

(ii) Measured by an appropriate method approved by the director and USEPA; or

(iii) Calculated by an appropriate method approved by the director and USEPA.

(3) The owner or operator of each vessel storing a mixture of indeterminate or variable composition shall be subject to the following:

(a) Prior to the initial filling of the vessel, the maximum true vapor pressure for the range of anticipated liquid compositions to be stored will be determined using the methods described in paragraph (F)(2) of this rule.

(b) For vessels in which the vapor pressure of the anticipated liquid composition is 0.5 pounds per square inch absolute or greater but less than 0.75 pounds per square inch absolute, an initial physical test of the vapor pressure is required; a physical test at least once every six months thereafter is required as determined by the following methods:

(i) ASTM method D2879-97(2007);

(ii) ASTM method D323-08; or

(iii) As measured by an appropriate method approved by the director.

(4) The owner or operator of each vessel equipped with a closed vent system and control device meeting the specifications of paragraph (C)(4) of this rule is exempt from the requirements of paragraphs (F)(1) and (F)(2) of this rule.

(G) Compliance dates.

The owner or operator of a facility that is subject to this rule shall comply with the requirements of this rule no later than the following dates:

(1) For any storage of a volatile organic liquid which commenced operation after the effective date of this rule, the compliance date for the operation is the initial startup date of the operation or August 25, 2009, whichever is later.

(2) For any storage of a volatile organic liquid which commenced operation before the effective date of this rule, the compliance date for the operation is August 25, 2009.

(H) Compliance certification.

(1) The owner or operator of a facility that is subject to this rule shall notify the appropriate Ohio environmental protection agency district office or local air agency in writing within thirty days following the completion of any of the following requirements. For a volatile organic liquid storage operation subject to the volatile organic emission control requirements in paragraph (C)(1), (C)(2) or (D)(1) of this rule:

(a) The completion of installation and initial use of vapor control equipment employed for all tanks that store a volatile organic liquid; or

(b) The completion of any inspection and/or measurement requirements specified under paragraphs (C)(3)(h) and (D)(3) of this rule for all tanks that store a volatile organic liquid.

(2) The compliance certification under paragraph (H)(1) of this rule shall provide the following, where applicable:

(a) A description of the requirements.

(b) A description of the vapor control equipment employed.

(c) A description of the monitoring devices.

(d) A description of the records that document continuing compliance.

(e) The results of any compliance tests, including documentation of test data.

(f) The results of any records that document continuing compliance, including calculations.

(g) A statement by the owner or operator of the affected facility as to whether the volatile organic liquid storage operation has complied with the requirement(s).

(I) Requirements on applicability notification, compliance certification, and permit application.

(1) The owner or operator of a facility that is subject to this rule and that operates a storage tank for volatile organic liquids with an initial startup date before the effective date of this rule shall notify the appropriate Ohio environmental protection agency district office or local air agency in writing that the volatile organic liquid storage tank is subject to this rule. The notification, which shall be submitted not later than sixty days after the effective date of this rule (or within sixty days after the volatile organic liquid storage tank becomes subject to this rule), shall provide the following information:

(a) Name and address of the owner or operator.

(b) Address (i.e., physical location) of the affected facility.

(c) Description of the volatile organic liquid storage tank and Ohio environmental protection agency emissions unit number (if assigned).

(d) Identification of the VOC emission requirement, the means of compliance, and the compliance date for the volatile organic liquid storage tank.

(e) Regarding an air pollution permit for the volatile organic liquid storage tank, whichever of the following is applicable:

(i) Submission of an application for an operating permit, a modification, or a permit-to-operate renewal in accordance with rule 3745-31-02 of the Administrative Code; or

[Comment: Applications requiring submittal prior to June 30, 2008, were submitted in accordance with Chapter 3745-35 of the Administrative Code.]

(ii) Submission of a statement of intent to submit an application for a Title V permit or revision of a Title V permit in accordance with paragraph (B) of rule 3745-77-02 or rule 3745-77-06 of Administrative Code, respectively.

(2) The owner or operator of a facility that is subject to this rule and that has a volatile organic liquid storage tank with an initial start-up date on or after the effective date of this rule shall notify the appropriate Ohio environmental protection agency district office or local air agency in writing that the volatile organic liquid storage tank is subject to this rule. The notification, which shall be submitted not later than either the date of initial startup of the volatile organic liquid storage tank or sixty days after the effective date of this rule (whichever is later), shall provide the information listed under paragraph (I)(1) of this rule. The application for an installation permit under rule 3745-31-02 of the

Administrative Code may be used to fulfill the notification requirements of this paragraph.

Effective: 05/12/2011

R.C. 119.032 review dates: 08/25/2013

CERTIFIED ELECTRONICALLY
Certification

05/02/2011
Date

Promulgated Under: 119.03
Statutory Authority: 3704.03(E)
Rule Amplifies: 3704.03(A), 3704.03(E)
Prior Effective Dates: 8/25/2008, 4/2/2009

3745-21-22 **Control of volatile organic compound emissions from offset lithographic printing and letterpress printing facilities.**

[Comment: For dates and availability of non-regulatory government publications, publications of recognized organizations and associations, federal rules, and federal statutory provisions referenced in this rule, see paragraph (HH) of rule 3745-21-01 of the Administrative Code titled "Referenced materials."]

(A) The requirements of paragraphs (B) to (I) of this rule shall apply to each lithographic printing or letterpress printing facility that meets all the following criteria:

(1) The facility is located in Ashtabula, Cuyahoga, Geauga, Lake, Lorain, Medina, Portage, or Summit county; and

(2) The facility employs letterpress printing or one or more of the following types of offset lithographic printing processes: heatset web, non-heatset web or sheet-fed; and

(3) The facility has total actual VOC emissions, before the application of control systems and devices, from all lithographic and/or letterpress printing operations (including emissions from cleaning solutions used on lithographic and/or letterpress printing presses and fountain solutions) equal to or greater than three tons of VOCs per rolling twelve-month period.

(B) Exemptions.

(1) The following operations are exempt from the fountain solution requirements as contained in paragraph (D)(3)(b) of this rule:

(a) Any sheet-fed press with a maximum sheet size eleven by seventeen inches or smaller.

(b) Any press with a total fountain solution reservoir capacity of less than one gallon.

(2) The following operations are exempt from the requirement to install add-on controls as contained in paragraph (D)(1) of this rule:

(a) Any heatset web press with a maximum web width of 22.0 inches or less.

(b) Any heatset web press with potential VOC emissions from ink oil less than or equal to twenty-five tons per year before the application of controls.

(c) Any heatset web press used for book printing.

(C) Definitions.

The definitions applicable to this rule are contained in paragraphs (W) and (DD) of rule 3745-21-01 of the Administrative Code.

(D) VOC emissions control requirements.

(1) Any person who owns or operates a subject heatset web offset lithographic or letterpress printing press with potential VOC ink oil emissions from the press dryer that are greater than twenty-five tons per year before the application of control systems and devices shall maintain the dryer air pressure lower than the pressroom air pressure at all times the press is operating and operate a control system that meets one of the following control requirement for that press:

(a) For a control system first installed before April 2, 2009 the control system shall reduce VOC emissions from each dryer by at least ninety per cent or maintain a maximum VOC outlet concentration of twenty ppmv, as hexane (C_6H_{14}) on a dry basis, whichever is less stringent; or

(b) For a control system first installed on or after April 2, 2009, the control system shall reduce VOC emissions from each dryer by at least ninety-five per cent or maintain a maximum VOC outlet concentration of twenty ppmv as hexane (C_6H_{14}) on a dry basis, whichever is less stringent.

(2) Any person who owns or operates a subject heatset web offset lithographic printing press shall meet one of the following requirements for the fountain solution used on that press:

(a) If the fountain solution contains only alcohol substitutes, maintain the as-applied VOC content of the fountain solution at or below 5.0 per cent, by weight, and use no alcohol in the fountain solution.

(b) If the fountain solution contains alcohol:

(i) Maintain the as-applied VOC content of the fountain solution at or below 1.6 per cent, by weight; or

(ii) Maintain the as-applied VOC content of the fountain solution at or below 3.0 per cent, by weight, and refrigerate the fountain solution to sixty degrees Fahrenheit or less.

(3) Any person who owns or operates a subject sheet-fed offset lithographic printing press shall meet one of the following requirements for the fountain solution used on that press:

(a) If the fountain solution contains only alcohol substitutes, maintain the as-applied VOC content of the fountain solution at or below 5.0 per cent, by weight.

(b) If the fountain solution contains alcohol:

(i) Maintain the as-applied VOC content of the fountain solution at or below 5.0 per cent, by weight; or

(ii) Maintain the as-applied VOC content of the fountain solution at or below 8.5 per cent, by weight, and refrigerate the fountain solution to sixty degrees Fahrenheit or less.

(4) Anyone who owns or operates a subject non-heatset web offset lithographic printing press shall maintain the as-applied VOC content of the fountain solution used on that press at or below 5.0 per cent, by weight, and use no alcohol in the fountain solution.

(5) Where it can be demonstrated to the satisfaction of the director that a subject offset lithographic printing press cannot be operated with fountain solutions meeting the limits in paragraph (D)(2), (D)(3), or (D)(4) of this rule for reasons of technological and/or economic feasibility the permitting authority may establish site-specific limits based upon evidence of technological or economic infeasibility subject to approval by USEPA as a state implementation plan revision.

(6) Any person who owns or operates a subject offset lithographic or letterpress printing press shall meet one of the following requirements for each cleaning solution used for cleaning on that press:

(a) Maintain the as-applied VOC content at or below seventy per cent, by weight; or

(b) Maintain the as-applied VOC composite partial vapor pressure at or below ten mm Hg at twenty degrees Celsius (sixty-eight degrees Fahrenheit).

The use of cleaning solutions not meeting the specifications of paragraphs (D)(6)(a) and (D)(6)(b) of this rule is permitted provided that the quantity used does not exceed one hundred ten gallons over any consecutive twelve-month period.

(7) Any person who owns or operates a subject offset lithographic or letterpress printing press shall keep all solvent containers closed at all times unless filling, draining, or performing cleanup operations.

(8) Any person who owns or operates a subject offset lithographic or letterpress printing press shall keep all solvent-laden shop towels in closed containers when not being used.

(E) Compliance dates.

(1) The owner or operator of an offset lithographic or letterpress printing facility that is subject to this rule shall comply with the requirements of this rule no later than the following dates:

(a) For any subject offset lithographic or letterpress printing press for which installation commenced before April 2, 2009, the compliance date for the press is twelve months from April 2, 2009.

(b) For any subject offset lithographic or letterpress printing press for which installation commenced on or after the effective date of this rule, the compliance date for the press is the initial startup date of the press.

(2) The owner or operator of an offset lithographic or letterpress printing facility that is subject to this rule shall demonstrate compliance with paragraph (D)(1) of this rule by testing the control device on each subject offset lithographic or letterpress printing press in accordance with paragraph (F)(1) of this rule according to the following:

(a) For any offset lithographic or letterpress printing facility subject to paragraph (E)(1)(a) of this rule, by no later than ninety days after the press's compliance date. In addition, the Ohio environmental protection agency may accept the results of an emission test conducted prior to the effective date of this rule, if the owner or operator provides information and data to the Ohio environmental protection agency which demonstrate that an approved USEPA emission test method was employed, that the operation of the press(es) was consistent with the current operating conditions and operating capacity, and that if the Ohio environmental protection agency had requested to witness the test, the test was witnessed by the Ohio environmental protection agency or its delegated agent.

(b) For any offset lithographic or letterpress printing facility subject to paragraph (E)(1)(b) of this rule, within one hundred eighty days after the press's compliance date.

(3) Additional testing of a subject offset lithographic or letterpress printing press and its VOC emission control system in accordance with paragraph (F)(1) of this rule may be required by the director to ensure continued compliance.

(F) Compliance test methods.

(1) For any heatset web offset lithographic or letterpress printing press that is subject to the requirements of paragraph (D)(1) of this rule, compliance shall be determined by performing emission tests in accordance with the following:

(a) For the purpose of demonstrating compliance with the emission control requirements paragraph (D)(1) of this rule, the affected source shall be run at typical operating conditions and flow rates compatible with scheduled production during any emission testing.

(b) The negative dryer pressure shall be established during the initial test using an airflow direction indicator, such as a smoke stick or aluminum ribbons, or differential pressure gauge. Capture efficiency and continuous dryer air flow monitoring is not required.

(c) The following USEPA test methods (in 40 CFR Part 60, Appendix A) shall be used to demonstrate compliance with the applicable emission control requirement in paragraph (D)(1) of this rule:

(i) USEPA method 1 or 1A, as appropriate, shall be used to select the sampling sites.

(ii) USEPA method 2, 2A, 2C, or 2D, as appropriate, shall be used to determine the velocity and volumetric flow rate of the exhaust stream.

(iii) USEPA method 3 or 3A, as appropriate, shall be used to determine the concentration of O_2 and CO_2.

(iv) USEPA method 4 shall be used to determine moisture content.

(v) USEPA method 18, 25, or 25A shall be used to determine the VOC concentration of the exhaust stream entering and exiting the control device, unless the alternate limit of twenty ppmv as specified in paragraphs (D)(1)(a) and (D)(1)(b) of this rule is being met, in which case only the VOC concentration of the exit exhaust shall be determined. In cases where the anticipated outlet VOC concentration of the control device is less than fifty ppmv as carbon, USEPA method 25A shall be used.

(a) If the average concentrations in the outlet of a thermal or catalytic oxidizer measured by USEPA method 25A are found to be greater than fifty ppmv as carbon, USEPA method 18 or 25 may be used to determine non-VOC components (methane and ethane) to correct the outlet VOC readings, unless the director determines that the uncorrected USEPA method 25A results are acceptable.

(b) A compliance test shall consist of up to three separate runs, each lasting a minimum of sixty minutes, unless the director determines that process variables dictate shorter sampling times.

(c) USEPA method 25 specifies a minimum probe temperature of two hundred sixty-five degrees Fahrenheit. To prevent condensation, the probe should be heated to at least the gas stream temperature, typically close to three hundred fifty degrees Fahrenheit.

(d) USEPA method 25A specifies a minimum temperature of two hundred twenty degrees Fahrenheit for the sampling components

leading to the analyzer. To prevent condensation when testing heatset web offset presses, the sampling components and flame ionization detector block should be heated to at least the gas stream temperature, typically close to three hundred fifty degrees Fahrenheit.

(e) The use of an adaptation to any of the analytical methods specified above shall be approved by the director and USEPA on a case-by-case basis. The owner or operator shall submit sufficient documentation for the director and USEPA to find that the analytical methods specified above will yield inaccurate results and that the proposed adaptation is appropriate.

(2) For any offset lithographic printing press that is subject to the requirements of paragraph (D)(2), (D)(3), or (D)(4) of this rule, compliance with the VOC content of the as-applied fountain solution shall be determined by one of the methods in paragraphs (F)(2)(a) to (F)(2)(c) of this rule except when paragraph (F)(2)(d) is applicable:

(a) USEPA method 24 shall be used to determine the VOC content of the as-applied fountain solution;

(b) If diluted prior to use, a calculation shall be performed for VOC content that combines USEPA method 24 analytical data for the concentrated materials used to prepare the as-applied fountain solution and the proportions in which they are mixed to make the as-applied fountain solution. The analysis of the concentrated material(s) may be performed by the supplier(s) of those material(s). The analytical data may be derived from a material safety data sheet (MSDS) or equivalent information from the supplier as long as it is based on USEPA method 24 results; or

(c) If not diluted prior to use, the owner or operator shall use formulation information provided by the supplier, such as a MSDS sheet or equivalent information from the supplier. In the event of a dispute between information provided by the supplier and data obtained by USEPA method 24, the data obtained by USEPA method 24 shall be employed.

(d) For any offset lithographic printing press that is subject to the requirements of paragraph (D)(2)(b) or (D)(3)(b) of this rule, when adding alcohol to a fountain solution batch previously tested in accordance with one of the compliance test methods contained in paragraphs (F)(2)(a) to (F)(2)(c) of this rule, in lieu of the methods in paragraphs (F)(2)(a) to (F)(2)(c) of this rule, the owner or operator shall determine the VOC (alcohol) content of the altered fountain solution using a hydrometer.

(3) For any offset lithographic printing press that is subject to the fountain solution temperature requirements of paragraph (D)(2)(b)(ii) or (D)(3)(b)(ii) of this rule, a thermometer or other temperature detection device capable of reading to 0.5

degrees Fahrenheit shall be used to ensure that any refrigerated fountain solution reservoirs are maintained at or below sixty degrees Fahrenheit at all times.

(4) For any offset lithographic or letterpress printing press that is subject to the requirements of paragraph (D)(6)(a) of this rule, the VOC content of cleaning solutions shall be determined by one of the following methods:

(a) USEPA method 24 shall be used to determine the VOC content of the cleaning solution;

(b) If diluted prior to use, a calculation shall be performed for VOC content that combines USEPA method 24 analytical data for the concentrated materials used to prepare the cleaning solution and the proportions in which they are mixed to make the as-applied cleaning solution. The analysis of the concentrated material(s) may be performed by the supplier(s) of those material(s). The analytical data may be derived from a material safety data sheet (MSDS) or equivalent information from the supplier as long as it is based on USEPA method 24 results; or

(c) If not diluted prior to use, the owner or operator shall use formulation information provided by the supplier, such as MSDS sheet or equivalent information from the supplier. In the event of a dispute between information provided by the supplier and data obtained by USEPA method 24, the data obtained by USEPA method 24 shall be employed.

(5) For any offset lithographic or letterpress printing press that is subject to the requirements of paragraph (D)(6)(b) of this rule, the VOC composite partial vapor pressure of cleaning solutions shall be determined by one of the following methods:

(a) If diluted prior to use, calculate the VOC composite vapor pressure of the as-applied solvent by using the formula for "VOC composite vapor pressure" as follows:

(i) Determine the identity and quantity of each compound in a blended organic solvent by using ASTM D2306, or by using ASTM E260 for organics and ASTM D3792 for water content, if applicable, or the manufacturer's product formulation data.

(ii) Determine the vapor pressure of each pure VOC component by using ASTM D2879 or publications such as "Perry's Chemical Engineer's Handbook, CRC Handbook of Chemistry and Physics, or Lange's Handbook of Chemistry."

(iii) Calculate the VOC composite partial pressure of the solvent by using the formula for "VOC composite partial pressure." For the purpose of this calculation, the blended solvent shall be assumed to be an ideal solution where "Raoult's Law" applies. The partial vapor pressures of

each compound at twenty degrees Celsius (sixty-eight degrees Fahrenheit) shall be used in the formula. The VOC composite partial pressure shall be calculated as follows:

$$PP_c = \sum_{i=1}^{n} \frac{(W_i)(VP_i)/MW_i}{\frac{W_w}{MW_w} + \frac{W_e}{MW_e} + \sum_{i=1}^{n} \frac{W_i}{MW_i}}$$

Where:

Wi = Weight of the "i"th VOC compound, in grams.

Ww = Weight of water, in grams.

We = Weight of exempt compound, in grams.

MWi = Molecular weight of the "i"th VOC compound, in grams per gram-mole.

MWw = Molecular weight of water, in grams per gram-mole.

MWe = Molecular weight of the "e"th exempt compound, in grams per gram-mole.

PPc= VOC composite partial vapor pressure at twenty degrees Celsius (sixty-eight degrees Fahrenheit), in mmHg.

VPi = Vapor pressure of the "i"th VOC compound at twenty degrees Celsius (sixty-eight degrees Fahrenheit), in mmHg.

(b) If not diluted prior to use, the owner or operator shall use formulation information provided by the supplier, such as a material safety data sheet (MSDS) or equivalent information from the supplier as long as it is based on results determined in accordance with the procedure under paragraph (F)(5)(a) of this rule.

(G) Monitoring and record keeping requirements.

(1) The owner or operator of an offset lithographic or letterpress printing press that is subject to the control requirements specified in paragraph (D)(1) of this rule, shall install and operate continuous temperature monitoring and recording equipment that measures and records temperature data at least once every fifteen minutes, and shall collect and record the following information and maintain the information at the facility for a period of five years:

(a) A log or record of any time when the control device and/or, monitoring equipment, are not in operation when any associated press is in operation.

(b) For thermal oxidizers all three-hour periods of operation during which the average combustion temperature was more than fifty degrees Fahrenheit below the average combustion temperature during the most recent emission test that demonstrated that the press was in compliance.

(c) For catalytic oxidizers all three-hour periods of operation during which the average temperature of the dryer exhaust gases immediately before the catalyst bed was more than fifty degrees Fahrenheit below the average temperature of the dryer exhaust gases during the most recent emission test that demonstrated that the press was in compliance.

(d) For catalytic oxidizers, the catalyst bed material shall be inspected annually for general catalyst condition and any signs of potential catalyst depletion. The owner or operator shall also collect a representative sample of the catalyst from the oxidizer, per manufacturer's recommendations, and have it tested to evaluate the catalyst's capability to continue to function at or above the required control efficiency. An evaluation of the catalyst bed material shall be conducted whenever the results of the inspection indicate signs of potential catalyst depletion or poor catalyst condition based on manufacturer's recommendations, but not less than once per year.

(2) The owner or operator of a heatset web or sheet-fed offset lithographic printing press subject to the requirements of paragraph (D)(2)(b) or (D)(3)(b) of this rule shall measure:

(a) The VOC (alcohol) content, in accordance with paragraph (F)(2)(d) of this rule, of any altered fountain solution, at the time of alteration, in per cent by weight, of the fountain solution employed in the press and shall maintain records of the results of the measurements at the facility for a period of five years. The alcohol content of the fountain solution shall be measured using a hydrometer. The hydrometer shall have a visual, analog, or digital readout with an accuracy of 0.5 per cent; and a standard solution shall be used to calibrate the hydrometer for the type of alcohol used in the fountain solution.

(b) On a daily basis, the temperature, in degrees Fahrenheit, of the fountain solution, if the owner or operator refrigerates the fountain solution in accordance with paragraph (D)(2)(b)(ii) or (D)(3)(b)(ii) of this rule, and shall maintain records of the results of the measurements at the facility for a period of five years.

(3) The owner or operator of a subject offset lithographic printing press shall maintain records, for a period of five years, of one of the following for fountain solution preparation:

(a) For an owner or operator maintaining a recipe log for each batch of fountain solution prepared for use in the press:

(i) A recipe log that identifies all recipes used to prepare the as-applied fountain solution. Each recipe shall be maintained in the recipe log for a period of five years from the date the recipe was last prepared for a press. Each recipe shall clearly identify the following:

(a) VOC content of each concentrated alcohol substitute, added to make the batch of fountain solution, based upon the manufacturer's laboratory analysis using USEPA method 24.

(b) The proportions in which the fountain solution is mixed, including the addition of alcohol and/or water. The proportion may be identified as a volume when preparing a discrete batch or may be identified as the settings when an automatic mixing unit is employed.

(c) The calculated VOC content of the final, mixed recipe.

(ii) Identification of the recipe used to prepare each batch of fountain solution for use in the press.

(iii) The date and time when the batch was prepared.

(iv) An affirmation the batch was prepared in accordance with the recipe.

(b) For an owner or operator not maintaining a recipe log in accordance with paragraph (G)(3)(a) of this rule, for each batch of fountain solution prepared for use in the press

(i) The volume and VOC content of each concentrated alcohol substitute, added to make the batch of fountain solution, based upon the manufacturer's laboratory analysis using USEPA method 24.

(ii) The volume of alcohol added to make the batch of fountain solution.

(iii) The volume of water added to make the batch of fountain solution.

(iv) The calculated VOC content of the final, mixed batch.

(v) The date and time the batch was prepared.

For purposes of paragraphs (G)(3)(a) and (G)(3)(b) of this rule, a fountain solution that is continuously blended with an automatic mixing unit is considered to be the same batch until such time that the recipe or mix ratio is changed.

(4) The owner or operator of a subject offset lithographic or letterpress printing press shall maintain records, for a period of five years, of one of the following for all cleaning solutions employed in all the offset lithographic and letterpress printing operations:

(a) For an owner or operator maintaining a recipe log for each batch of cleaning solution prepared:

(i) A recipe log that identifies all recipes used to prepare the as-applied cleaning solution. Each recipe shall be maintained in the recipe log for a period of five years from the date the recipe was last prepared. Each recipe shall clearly identify the following:

(a) The VOC content of each cleaning solution, based upon the manufacturer's laboratory analysis using USEPA method 24; or

(b) The VOC composite partial vapor pressure of each cleaning solution, based upon the method under paragraph (F)(5) of this rule.

(ii) Identification of the recipe used to prepare each batch of cleaning solution.

(iii) The date and time when the batch was prepared.

(iv) An affirmation the batch was prepared in accordance with the recipe.

(b) For an owner or operator not maintaining a recipe log in accordance with paragraph (G)(5)(a) of this rule, for each batch of cleaning solution prepared, records of the VOC content or VOC composite partial vapor pressure and the date and time the batch was prepared.

(5) The owner or operator of a subject offset lithographic or letterpress printing press shall maintain monthly records of the following information:

(a) The total amount, in gallons, of all the cleaning solutions employed; and

(b) The total amount, in gallons, of all the cleaning solutions employed that exceeds the allowable VOC content or VOC composite vapor pressure.

(H) Reporting requirements for the monitoring and record keeping information.

The owner or operator of an offset lithographic or letterpress printing facility that is subject to this rule shall notify the director of any of the following exceedances of applicable requirements. Each notification shall be submitted to the director within forty-five days after the instance occurs, and it shall include a copy of the record showing the instance.

(1) If determining alcohol content via hydrometer measurement, each hydrometer measurement that shows an exceedance of the applicable alcohol content limitation specified in paragraph (D)(2)(a), (D)(2)(b), (D)(3)(a), or (D)(3)(b) of this rule.

(2) If complying via refrigerated fountain solution, each temperature reading that shows an exceedance of the temperature limitation specified in paragraph (D)(2)(b) or (D)(3)(b) of this rule.

(3) Each calculated VOC content that exceeds the VOC content limitation specified in paragraph (D)(2)(b), (D)(3)(b), or (D)(4) of this rule.

(4) Each instance when an exceedance of the VOC content or VOC composite partial vapor pressure specified in paragraph (D)(6) of this rule for cleaning solutions occurs.

(5) All three-hour blocks of time during which the average combustion temperature within the thermal oxidizer was below the temperature limitation specified in paragraph (G)(1)(b) of this rule.

(6) All three-hour blocks of time when the emissions unit was in operation during which the average temperature of the exhaust gases immediately before the catalyst bed was below the temperature limitations specified paragraph (G)(1)(c) of this rule.

(I) Retention factors and capture efficiencies.

For purposes of determining VOC emissions from offset lithographic printing operations, the following retention factors and capture efficiencies shall be used:

(1) A portion of the VOC contained in inks and cleaning solution is retained in the printed web or in the shop towels used for cleaning. The following retention factors shall be used:

(a) A twenty per cent VOC retention factor shall be used for heatset inks printed on absorptive substrates, meaning eighty per cent of the VOC in the ink is emitted during the printing process and is available for capture and control by an add-on pollution control device.

(b) A ninety-five per cent VOC retention factor shall be used for sheet-fed and non-heatset web inks printed on absorptive substrates, meaning five per cent of the VOC in the ink is emitted during the printing process.

(c) A fifty per cent VOC retention factor shall be used for cleaning solution VOC in shop towels for cleaning solutions with a VOC composite vapor pressure of no more than ten mmHg at twenty degrees Celsius (sixty-eight degrees Fahrenheit) if the contaminated shop towels are kept in closed

containers, meaning fifty per cent of the VOC used on the shop towels is emitted during the cleaning process.

(2) A portion of the VOC contained in inks, fountain solutions, and automatic blanket washes on heatset web presses is captured in the press dryer for control by add-on pollution control devices. The following capture efficiencies are to be used:

(a) A one hundred per cent VOC carry over efficiency shall be used for inks. All the VOC in the ink that is not retained is assumed to be volatilized in the press dryer. Capture efficiency testing for heatset dryers is not required if it is demonstrated that pressure in the dryer is negative relative to the surrounding press room and the airflow is into the dryer.

(b) A seventy per cent VOC carry over efficiency shall be used for fountain solutions containing alcohol substitutes.

(c) A forty per cent VOC carry over efficiency shall to be used for automatic blanket wash solutions with a VOC composite vapor pressure of no more than ten mmHg at twenty degrees Celsius (sixty-eight degrees Fahrenheit).

(J) Requirements on applicability notification, compliance certification, and permit application.

(1) The owner or operator of an offset lithographic or letterpress printing facility that is subject to this rule and that has an offset lithographic or letterpress printing press with an initial startup date before April 2, 2009 of this rule shall notify the Ohio environmental protection agency district office or local air agency in writing that the offset lithographic or letterpress printing press is subject to this rule. The notification, which shall be submitted not later than sixty days after the effective date of this rule (or within sixty days after the offset lithographic or letterpress printing press becomes subject to this rule), shall provide the following information:

(a) Name and address of the owner or operator;

(b) Address (i.e., physical location) of the offset lithographic printing or letterpress printing facility;

(c) Equipment description and Ohio EPA application number (if assigned) of the offset lithographic or letterpress printing press;

(d) Identification of the VOC emission requirement, the means of compliance, and the compliance date for the offset lithographic or letterpress printing press;

(e) Regarding an air pollution permit for the offset lithographic or letterpress printing press, whichever of the following is applicable;

(i) Submission of an application for an operating permit, an operating permit modification, or an operating permit renewal in accordance with rule 3745-31-02 of the Administrative Code; or

(ii) Submission of a statement of intent to submit an application for a Title V permit or modification of a Title V permit in accordance with paragraph (B) of rule 3745-77-02 or rule 3745-77-06 of the Administrative Code, respectively.

(2) The owner or operator of an offset lithographic or letterpress printing facility that is subject to this rule and that has an offset lithographic or letterpress printing press with an initial startup date on or after April 2, 2009 of this rule shall notify the Ohio environmental protection agency district office or local air agency in writing that the offset lithographic or letterpress printing press is subject to this rule. The notification, which shall be submitted not later than either the date of initial startup of the offset lithographic or letterpress printing press, or sixty days after April 2, 2009 (whichever is later), shall provide the information listed under paragraph (J)(1) of this rule. The application for an installation permit under rule 3745-31-02 of the Administrative Code may be used to fulfill the notification requirements of this paragraph.

(3) Compliance certification.

(a) The owner or operator of an offset lithographic or letterpress printing facility that is subject to this rule shall notify the Ohio environmental protection agency district office or local air agency in writing within thirty days following the completion of any of the following requirements:

(i) For an offset lithographic or letterpress printing press subject to the VOC emission requirements in paragraphs (D)(2) to (D)(8) of this rule, the first documented achievement of compliance with each of the requirements;

(ii) For an offset lithographic or letterpress printing press subject to the VOC emission control requirement in paragraph (D)(1) of this rule:

(a) The completion of installation and initial use of a VOC emission control system for the offset lithographic or letterpress printing press;

(b) The completion of installation and initial use of any monitoring devices required under paragraph (G) of this rule for the offset lithographic printing press; and

(c) The completion of any compliance testing conducted in accordance with paragraph (F) of this rule to demonstrate compliance with the applicable control requirement.

(b) The compliance certification under paragraph (I)(3)(a) of this rule shall provide the following, where applicable:

(i) A description of the requirements;

(ii) A description of the VOC emission control system;

(iii) A description of the monitoring devices;

(iv) A description of the records that document continuing compliance;

(v) The results of any compliance tests, including documentation of test data;

(vi) The results of any records that document continuing compliance, including calculations; and

(vii) A statement by the owner or operator of the offset lithographic or letterpress printing facility as to whether the offset lithographic or letterpress printing press has complied with the requirement(s).

(K) Requirements for an owner or operator of an offset lithographic or letterpress printing facility that determines they are not subject to one or more of the control requirements in paragraph (D) of this rule.

(1) When establishing that the facility's total actual VOC emissions, before the application of control systems and devices, from all lithographic and/or letterpress printing operations (including emissions from cleaning solutions used on lithographic and/or letterpress printing presses and fountain solutions) are less than three tons of VOCs per rolling twelve-month period and, therefore, the facility is not subject to the add-on control, cleaning solvent and fountain solution requirements in paragraphs (D)(1) to (D)(8) of this rule, the owner or operator shall maintain one of the following records:

(a) Monthly records of material usage demonstrating the following thresholds have not been exceeded:

--

Type of Letterpress or Offset Lithographic Printing Operation	12-Month Rolling Threshold
Sheet-fed only	768 gallons of cleaning solvent and fountain solution additives
Non-heatset Web only	768 gallons of cleaning solvent and fountain solution additives
Combination of Sheet-fed and Non-heatset Web	768 gallons of cleaning solvent and fountain solution additives.

Heatset Web only	5400 pounds of ink, cleaning solvent and fountain solution additives

A facility that employs a combination of printing technologies that includes a heatset web offset lithographic printing press(es) may not use this option for demonstrating actual emissions are less than three tons of VOCs per rolling twelve-month period.

(b) The following monthly records and calculations demonstrating actual emissions did not equal or exceed three tons of VOCs per rolling twelve-month period:

(i) The total gallons of each cleaning solvent used;

(ii) The VOC content of each cleaning solvent;

(iii) The total gallons of each fountain solution used;

(iv) The VOC content of each fountain solution;

(v) The total pounds of each ink used; and

(vi) The VOC content of each ink.

VOC calculations shall be based on the following formula using applicable retention factors identified in paragraph (I)(1) of this rule:

VOC emissions = amount of ink (pounds) x VOC content (weight fraction) x (1 - retention factor, as a fraction) + amount of fountain solution (gallons) x VOC content (pounds per gallon) + amount of cleaning solvent (gallons) x VOC content (pounds per gallon) x (1 - retention factor, as a fraction).

(2) When establishing that the heatset web offset lithographic or letterpress printing press potential VOC ink oil emissions, before control, from the press dryer of any heatset web offset lithographic printing press or heatset web letterpress printing press are less than twenty-five tons per year and, therefore, the facility is not subject to the add-on control requirements in paragraph (D)(1) of this rule, the owner or operator shall maintain the following records on a monthly basis for each such press:

(a) The total pounds of each ink used;

(b) The VOC content of each ink; and

(c) The hours of operation of each press.

(3) If an owner or operator of an offset lithographic or letterpress printing facility determines they are subject to one or more of the control requirements in

paragraph (D) of this rule based on the records required under paragraph (J) of this rule, the owner or operator shall comply with said requirement(s) of this rule.

Effective: 02/10/2010

R.C. 119.032 review dates: 04/02/2014

CERTIFIED ELECTRONICALLY
Certification

01/29/2010
Date

Promulgated Under: 119.03
Statutory Authority: 3704.03(E)
Rule Amplifies: 3704.03(A), 3704.03(E)
Prior Effective Dates: 4/2/09

3745-21-23 **Control of volatile organic compound emissions from industrial solvent cleaning operations.**

[Comment: For dates and availability of non-regulatory government publications, publications of recognized organizations and associations, federal rules, and federal statutory provisions referenced in this rule, see paragraph (JJ) of rule 3745-21-01 of the Administrative Code titled " Reference to materials".]

(A) Applicability.

(1) The requirements of paragraphs (B) to (I) of this rule shall apply to any facility that meets all of the following criteria:

(a) The facility is located in Ashtabula, Cuyahoga, Geauga, Lake, Lorain, Medina, Portage, or Summit county.

(b) The facility employs solvent materials in solvent cleaning operations during the production, repair, maintenance, or servicing of parts, products, tools, machinery, equipment, or general work areas, and stores and/or disposes of these solvent materials.

(c) The total actual VOC emissions from all of the solvent cleaning operations at the facility, other than cleaning operations exempt pursuant to paragraphs (A)(2), (D)(1) and (D)(2) of this rule, are equal to or greater than 3.0 tons per twelve-month rolling period before the application of capture systems and control devices.

(2) The provisions of this rule shall not apply to cleaning operations in the following source categories listed for regulation under Section 183(e) of the Clean Air Act:

(a) Aerospace coatings;

(b) Flexible package printing materials;

(c) Lithographic printing materials;

(d) Letterpress printing materials;

(e) Flat wood paneling coatings;

(f) Large appliance coatings;

(g) Metal furniture coatings;

(h) Paper film and foil coatings;

(i) Wood furniture coatings;

(j) Shipbuilding and repair coatings;

(k) Plastic parts coatings;

(l) Miscellaneous metals parts coatings;

(m) Fiberglass boat manufacturing materials;

(n) Miscellaneous industrial adhesives; or

(o) Auto and light-duty truck assembly coatings.

(B) Definitions.

The definitions applicable to this rule are contained in paragraphs (A), (B), and (EE) of rule 3745-21-01 of the Administrative Code.

(C) VOC emission control requirements.

(1) VOC-content limitations.

The owner or operator of a facility that is subject to this rule shall not use a solvent to perform solvent cleaning operations unless the solvent complies with the applicable VOC-content limitation specified in the following table:

-Table of standards-

Solvent Cleaning Operation	VOC-Content Limitation [in pounds per gallon, as employed]
(A) Product cleaning during manufacturing process or surface preparation for coating, adhesive, or ink application:	
(1) General	0.42
(2) Electrical apparatus components and electronic components	0.83
(3) Medical devices and pharmaceuticals	6.7
(B) Repair and maintenance cleaning:	
(1) General	0.42
(2) Electrical apparatus components and electronic components	0.83
(3) Medical devices and pharmaceuticals	
(a) Tools, equipment and machinery	6.7
(b) General work surfaces	5.0
(C) Cleaning of coating or adhesive application equipment	0.42
(D) Cleaning of ink application	

equipment:	
(1) General	0.42
(2) Flexographic printing	0.42
(3) Gravure printing:	
(a) Publication	0.83
(b) Packaging	0.42
(4) Screen printing	4.2
(5) Ultraviolet ink and electron beam ink application equipment, except screen printing	5.4
(6) Specialty flexographic printing	0.83
(E) Cleaning of polyester resin application equipment not subject to 40 CRF Part 63 Subpart WWWW	0.42

(2) Cleaning devices and methods.

The owner or operator of a facility that is subject to this rule shall employ only the following cleaning devices and methods:

(a) Wipe cleaning.

(b) Closed containers or hand held spray bottles from which solvents are applied without a propellant-induced force.

(c) Cleaning equipment which has a solvent container that can be, and is closed during cleaning operations, except when depositing and removing objects to be cleaned, and is closed during non-operation with the exception of maintenance and repair to the cleaning equipment itself.

(d) Remote reservoir cleaner, if the operator of the cleaner complies with all of the following:

(i) Prevents solvent vapors from escaping from the solvent container by using such devices as a cover or a valve when the remote reservoir is not being used, cleaned, or repaired.

(ii) Directs solvent flow in a manner that will prevent liquid solvent from splashing outside of the remote reservoir cleaner.

(iii) Does not clean porous or absorbent materials, such as cloth, leather, wood, or rope.

(iv) Uses only solvent containers free of all liquid leaks. Auxiliary equipment, such as pumps, pipelines, or flanges, shall not have any liquid leaks, visible tears, or cracks. Any liquid leak, visible tear, or crack detected shall be repaired within one calendar day, or the leaking

section of the remote reservoir cold cleaner shall be drained of all solvent and shut down until it is replaced or repaired.

(e) Non-atomized solvent flow method where the cleaning solvent is collected in a container or a collection system which is closed except for solvent collection openings and, if necessary, openings to avoid excessive pressure build-up inside the container.

(f) Solvent flushing method where the cleaning solvent is discharged into a container which is closed except for solvent collection openings and, if necessary, openings to avoid excessive pressure build-up inside the container. The discharged solvent from the equipment must be collected into containers without atomizing into the open air. The solvent may be flushed through the system by air or hydraulic pressure, or by pumping.

(3) The owner or operator of a facility that is subject to this rule is prohibited from atomizing any solvent unless the emissions are vented to VOC emission control equipment that meet the requirements of paragraph (C)(5) of this rule.

(4) Storage and disposal.

All VOC-containing solvents used in solvent cleaning operations shall be stored in non-absorbent, non-leaking containers which shall be kept closed at all times except when filling or emptying. It is recommended that cloth and paper moistened with VOC-containing solvents be stored in closed, non-absorbent, non-leaking containers.

(5) Control equipment.

In lieu of complying with the requirements of paragraphs (C)(1) and (C)(2) of this rule for a solvent cleaning operation, the owner or operator of a facility that is subject to this rule may comply with this rule by installing and operating VOC emission control equipment for the solvent cleaning operation. The VOC emission control equipment shall comply with all of the following requirements:

(a) A capture efficiency of at least ninety per cent, by weight, for the VOC emissions.

(b) Either a destruction efficiency of at least ninety-five per cent, by weight, for the VOC emissions or an outlet concentration of less than fifty parts per million, by volume, dry basis, for the VOC emissions.

(6) Alternate compliance option.

(a) In lieu of complying with the requirements in paragraph (C)(1) of this rule, the owner or operator of a facility may use solvents or solvent solutions for industrial cleaning operations which have a VOC composite partial vapor pressure of less than or equal to eight mm of Hg at twenty degrees Celsius.

(b) In lieu of complying with the requirements in paragraphs (C)(1) and (C)(2) of this rule, a manufacturer of coatings, inks, or adhesives may comply with the following requirements:

(i) Clean portable or stationary mixing vats, high dispersion mills, grinding mills, tote tanks and roller mills by one or more of the following methods:

(a) Use a cleaning solvent that either contains less than 1.67 pounds per gallon of VOC or has a composite vapor pressure no more than eight mm of Hg at twenty degrees Celsius;

(b) Comply with the following work practices:

(i) Equipment being cleaned must be maintained leak free;

(ii) VOC-containing cleaning materials must be drained from the cleaned equipment upon completion of cleaning;

(iii) VOC-containing cleaning materials, including waste solvent, shall not be stored or disposed of in such a manner that will cause or allow evaporation into the atmosphere; and

(iv) Store all VOC-containing cleaning materials in closed containers.

(c) Collect and vent the emissions from equipment cleaning to a VOC emission control system that has an overall capture and control efficiency of at least eighty per cent, by weight, for the VOC emissions. Where such reduction is achieved by incineration, at least ninety per cent of the organic carbon shall be oxidized to carbon dioxide.

(d) Use organic solvents other than those allowed in paragraph (C)(6)(b)(i)(a) of this rule provided no more than sixty gallons of fresh solvent shall be used per month. Organic solvent that is reused or recycled (either on-site or off-site), for further use in equipment cleaning or the manufacture of coating, ink, or adhesive shall not be included in this limit. Also, store all VOC-containing cleaning materials in closed containers.

(ii) When using solvent for wipe cleaning, the owner or operator of a facility shall:

(a) Not use open containers for the storage or disposal of cloth or paper impregnated with organic compounds that is used for cleanup, or coating, ink, or adhesive removal; and

(b) Not store spent or fresh organic compounds to be used for cleanup or coating, ink, or adhesive removal in open containers.

(D) Exemptions.

(1) The following solvent cleaning operations are exempt from all the requirements of this rule:

(a) Any solvent cleaning operation that is subject to paragraph (O) of rule 3745-21-09 of the Administrative Code.

(b) Janitorial cleaning, including graffiti removal.

(c) Stripping of cured coatings, cured ink, or cured adhesives.

(d) Cleaning operations in printing pre-press or graphic arts pre-press areas, including the cleaning of film processors, color scanners, plate processors, film cleaning, and plate cleaning.

(e) Cleaning operations associated with digital printing.

(2) The following solvent cleaning operations are exempt from the VOC-content limitations specified in paragraph (C)(1) of this rule:

(a) Cleaning of solar cells, laser hardware, scientific instruments, and high-precision optics.

(b) Cleaning conducted as part of the following: performance laboratory tests on coatings, adhesives, or inks; research and development programs; and laboratory tests in quality assurance laboratories.

(c) Cleaning of paper-based gaskets and clutch assemblies where rubber is bonded to metal by means of an adhesive.

(d) Cleaning of cotton swabs to remove cottonseed oil before cleaning of high-precision optics.

(e) Medical device and pharmaceutical facilities using up to 1.5 gallons per day of solvents.

(f) Cleaning of adhesive application equipment used for thin metal laminating.

(g) Cleaning of electronic or electrical cables.

(h) Touch-up cleaning performed on printed circuit boards where surface mounted devices have already been attached.

(i) Cleaning of coating and adhesive application processes utilized to manufacture transdermal drug delivery product using less than three gallons per day of ethyl acetate.

(j) Cleaning of application equipment used to apply coatings on satellites and radiation effect coatings.

(k) Cleaning of application equipment used to apply solvent-borne fluoropolymer coatings.

(l) Cleaning of ultraviolet or electron beam adhesive application.

(m) Cleaning of sterilization indicating ink application equipment if the facility employs less than 1.5 gallons per day of solvents for such cleaning.

(n) Cleaning of metering rollers, dampening rollers and printing plates.

(o) Cleaning of polyester resin application equipment for sources subject to 40 CFR Part 63, Subpart WWWW.

(p) Cleaning of polyester resin application equipment for sources subject to 40 CFR Part 63, Subpart VVVV or rule 3745-21-27 of the Administrative Code.

(3) The following solvent cleaning operations are exempt from the requirements of paragraph (C)(3) of this rule:

(a) Cleaning of the nozzle tips of automated spray equipment systems, except for robotic systems.

(b) Cleaning with spray bottles or containers described in paragraph(C)(2)(b) of this rule.

(c) Printing operations where the roller or blanket wash is applied automatically.

(4) Cleaning with aerosol products shall be exempt from the requirements of paragraphs (C)(1) and (C)(3) of this rule if the facility employs 1.25 gallons (one hundred sixty fluid ounces) or less of the aerosol products per day.

(E) Compliance dates.

(1) The owner or operator of a facility that is subject to this rule shall comply with the requirements of this rule no later than the following dates:

(a) For any solvent cleaning operation which commenced operation before April 2, 2009, the compliance date for the operation is the initial startup date of the operation or April 2, 2010, whichever is later.

(b) For any solvent cleaning operation which commenced operation on or after April 2, 2009, the compliance date for the operation is the initial startup date of the operation.

(2) If an owner or operator of a solvent cleaning operation that is subject to this rule employs VOC emission control equipment to comply with this rule, pursuant to paragraph (C)(5) of this rule, the owner or operator shall demonstrate compliance with paragraph (C)(5) of this rule by testing the VOC emission control equipment in accordance with paragraph (F)(2) of this rule within ninety days after the compliance date for the solvent cleaning operation.

(3) Additional testing of the VOC emission control equipment for a solvent cleaning operation in accordance with paragraph (F)(2) of this rule may be required by the director to ensure continued compliance.

(F) Compliance test methods.

(1) For any solvent cleaning operation that is subject to the requirements of paragraph (C)(1) of this rule, USEPA method 24, or formulation data from the solvent material supplier, shall be used to determine the VOC content of the solvent material employed in the solvent cleaning operation. In the event of a conflict between the solvent material formulation data and data obtained by method 24, the method 24 results will take precedence.

(2) For any solvent cleaning operation that is subject to the requirements of paragraph (C)(5) or (C)(6) of this rule, compliance shall be determined by performing emission tests in accordance with the following:

(a) The general provisions specified under paragraphs (A)(2) to (A)(5) of rule 3745-21-10 of the Administrative Code shall apply to the compliance testing.

(b) The test methods and procedures of paragraph (C) of rule 3745-21-10 of the Administrative Code shall be followed.

(3) Determination of vapor pressure.

The composite partial pressure of solvents shall be determined by:

(a) Determining the identity and quantity of each compound in a blended organic solvent by using ASTM D2306-00, or by using ASTM E260-96(2001) for organics and ASTM D3792-05 for water content, if applicable, or the manufacturer's product formulation data; and

(b) Determining the vapor pressure of each pure VOC component by using ASTM D2879 or from publications such as "Perry's Chemical Engineer's Handbook, CRC Handbook of Chemistry and Physics, or Lange's Handbook of Chemistry;" and

(c) Calculating the composite partial pressure of the solvent by using the formula for composite partial pressure. For the purpose of this calculation, the blended solvent shall be assumed to be an ideal solution where "Raoult's Law" applies. The partial pressures of each compound at twenty degrees Celsius (sixty-eight degrees Fahrenheit) shall be used in the formula.

The VOC composite partial pressure is calculated as follows:

$$PP_c = \sum_{i=1}^{n} \frac{(W_i)(VP_i)/MW_i}{\frac{W_w}{MW_w} + \frac{W_e}{MW_e} + \sum_{i=1}^{n} \frac{W_i}{MW_i}}$$

Where:

Wi = Weight of the "i"th VOC compound, in grams.

Ww = Weight of water, in grams.

We = Weight of exempt compound, in grams.

MWi = Molecular weight of the "i"th VOC compound, in grams per gram-mole.

MWw = Molecular weight of water, in grams per gram-mole.

MWe = Molecular weight of the "e"th exempt compound, in grams per gram-mole.

PPc= VOC composite partial pressure at twenty degrees Celsius (sixty-eight degrees Fahrenheit), in mmHg.

VPi = Vapor pressure of the "i"th VOC compound at twenty degrees Celsius (sixty-eight degrees Fahrenheit), in mmHg.

(G) Monitoring and record keeping requirements.

(1) The owner or operator of a solvent cleaning operation that is subject to one or more of the VOC-content limitations specified in paragraph (C)(1) of this rule shall collect and record the following information each month for each cleaning material subject to a VOC-content limitation and shall maintain the information at the facility for a period of five years:

(a) The name and identification of each cleaning material and the associated solvent cleaning activity.

(b) The VOC content, based upon USEPA method 24, of each cleaning material, in pounds per gallon of material, as employed or the VOC composite partial vapor pressures of the solvents or solvent solutions used in the industrial cleaning operations.

(2) If an owner or operator of a solvent cleaning operation is subject to paragraph (C)(5) or (C)(6) of this rule and employs a thermal incinerator or catalytic incinerator to achieve and maintain compliance, the owner or operator shall comply with the following requirements:

(a) Continuous temperature monitoring and continuous temperature recording equipment shall be installed and operated to accurately measure the operating temperature(s) for the control device.

(b) The following information shall be collected and recorded each day of operation of the solvent cleaning operation and the control device, and the information shall be maintained at the facility for a period of five years:

(i) A log or record of the operating time for the control device, monitoring equipment, and the associated solvent cleaning operation.

(ii) For thermal incinerators, all three-hour periods of operation during which the average combustion temperature was more than fifty degrees Fahrenheit below the average combustion temperature during the most recent emission test that demonstrated that the solvent cleaning operation was in compliance.

(iii) For catalytic incinerators, all three-hour periods of operation during which the average temperature of the dryer exhaust gases immediately before the catalyst bed was more than fifty degrees Fahrenheit below the average temperature of the dryer exhaust gases during the most recent emission test that demonstrated that the solvent cleaning operation was in compliance, and all three-hour periods during which the average temperature difference across the catalyst bed was less than eighty per cent of the average temperature difference during the most recent emission test that demonstrated that the solvent cleaning operation was in compliance.

(3) If an owner or operator of a solvent cleaning operation is subject to paragraph (C)(5) or (C)(6) of this rule and employs a carbon adsorption system to achieve and maintain compliance, the owner or operator shall comply with the following requirements:

(a) One of the following types of monitoring and recording equipment shall be installed and operated for the carbon adsorption system:

(i) A continuous emission monitoring and recording system that is capable of accurately measuring and recording the concentration of organic compounds in the exhaust gases from the carbon adsorption system.

(ii) Monitoring and recording equipment that are capable of accurately measuring and recording the total mass steam flow rate for each regeneration cycle of each carbon bed.

(iii) Monitoring and recording equipment that are capable of accurately measuring and recording the temperature of each carbon bed after regeneration (and after completion of any cooling cycle(s)).

(b) The following information shall be collected and recorded each day of operation of the solvent cleaning operation and the carbon adsorption system, and the information shall be maintained at the facility for a period of five years:

(i) A log or record of the operating time for the carbon adsorption system, monitoring equipment, and the associated solvent cleaning operation.

(ii) For a carbon adsorption system that employs a continuous emission monitoring and recording system to measure and record the concentration of organic compounds in the exhaust gases, all three-hour periods of operation during which the average concentration level or reading in the exhaust gases is more than twenty per cent greater than the exhaust gas organic compound concentration level or reading measured by the most recent performance test that demonstrated that the solvent cleaning operation was in compliance.

(iii) For a carbon adsorption system that employs monitoring and recording equipment to measure and record the total mass steam flow rate for each regeneration cycle of each carbon bed, all carbon bed regeneration cycles during which the total mass steam flow rate was more than ten per cent below the total mass steam flow rate during the most recent performance test that demonstrated that the solvent cleaning operation was in compliance.

(iv) For a carbon adsorption system that employs monitoring and recording equipment to measure and record the temperature of each carbon bed after regeneration (and after completion of any cooling cycle(s)), all carbon bed regeneration cycles during which the temperature of the carbon bed after regeneration (and after completion of any cooling cycle(s)) was more than ten per cent greater than the carbon bed temperature during the most recent performance test that demonstrated that the solvent cleaning operation was in compliance.

(4) Any owner or operator of a solvent cleaning operation that is exempt from the VOC-content limitation specified in paragraph (C)(1) of this rule, pursuant to

paragraph (D)(2)(e) or (D)(2)(m) of this rule, shall collect and record the following information each day for each such solvent cleaning operation and shall maintain the information at the facility for a period of five years:

(a) The name and identification number of each solvent employed in the solvent cleaning operation.

(b) The volume, in gallons, of each solvent employed in the solvent cleaning operation.

(c) The total volume, in gallons, of all of the solvents employed in the solvent cleaning operation.

(5) Any owner or operator of a solvent cleaning operation that is exempt from the requirements of paragraphs (C)(1) and (C)(3) of this rule, pursuant to paragraph (D)(4) of this rule, shall collect and record the following information each day for each such solvent cleaning operation and shall maintain the information at the facility for a period of five years:

(a) The name and identification number of each aerosol product employed in the solvent cleaning operation.

(b) The volume, in gallons, of each aerosol product employed in the solvent cleaning operation.

(c) The total volume, in gallons, of all of the aerosol products employed in the solvent cleaning operation.

(6) Any owner or operator of a solvent cleaning operation that is exempt from the VOC-content limitation specified in paragraph (C)(1) of this rule, pursuant to paragraph (D)(2)(i) of this rule, shall record each day the total volume of ethyl acetate employed in such solvent cleaning operation and shall maintain the information at the facility for a period of five years.

(7) Any manufacturer of coatings, inks, or adhesives that complies with paragraph (C)(6)(b)(i)(d) of this rule, shall record the following information each month for each cleaning material and shall maintain the information at the facility for a period of five years:

(a) The total volume of fresh cleaning solvent material used for equipment cleaning; and

(b) The total volume of cleaning solvent material recovered for either on-site or off-site recycling.

(H) Reporting requirements for the monitoring and record keeping information.

(1) Any owner or operator of a solvent cleaning operation that is subject to one or more of the VOC-content limitations specified in paragraph (C)(1) of this rule shall notify the director of any record maintained in accordance with paragraph (G)(1) of this rule showing the use of noncomplying solvents. A copy of such record shall be sent to the director within thirty days following the end of the month in which the use of noncomplying solvents occurs.

(2) Any owner or operator of a solvent cleaning operation that employs control equipment and is subject to paragraph (C)(5) of this rule shall submit to the director quarterly summaries of the records required by paragraphs (G)(2)(b) and (G)(3)(b) of this rule. These quarterly reports shall be submitted no later than April thirtieth, July thirty-first, October thirty-first, and January thirty-first, and shall cover the records for the previous calendar quarters.

(3) Any owner or operator of a solvent cleaning operation that is exempt from the VOC-content limitation specified in paragraph (C)(1) of this rule, pursuant to paragraph (D)(2)(e) or (D)(2)(m) of this rule, shall notify the director of any record maintained in accordance with paragraph (G)(4) of this rule showing that the solvent cleaning operation employs more than the applicable maximum daily solvent usage limit. A copy of such record shall be sent to the director within thirty days following the end of the month in which the exceedance occurs.

(4) Any owner or operator of a solvent cleaning operation that is exempt from the requirements of paragraphs (C)(1) and (C)(3) of this rule, pursuant to paragraph (D)(4) of this rule, shall notify the director of any record maintained in accordance with paragraph (G)(5) of this rule showing that the solvent cleaning operation employs more than the maximum daily usage limit for aerosol products. A copy of such record shall be sent to the director within thirty days following the end of the month in which the exceedance occurs.

(5) Any owner or operator of a solvent cleaning operation that is exempt from the VOC-content limitation specified in paragraph (C)(1) of this rule, pursuant to paragraph (D)(2)(i) of this rule, shall notify the director of any record maintained in accordance with paragraph (G)(6) of this rule showing that the solvent cleaning operation employs more than the maximum daily usage limit for ethyl acetate. A copy of such record shall be sent to the director within thirty days following the end of the month in which the exceedance occurs.

(I) Requirements on applicability notification, compliance certification, and permit application.

(1) The owner or operator of a facility that is subject to this rule and that has a solvent cleaning operation with an initial startup date before the effective date of this rule shall notify the Ohio environmental protection agency district office or local air agency in writing that the solvent cleaning operation is subject to this rule. The notification, which shall be submitted not later than June 1, 2009 (or within sixty days after the solvent cleaning operation becomes subject to this rule), shall provide the following information:

(a) Name and address of the owner or operator.

(b) Address (i.e., physical location) of the affected facility.

(c) Description of the solvent cleaning operation and Ohio environmental protection agency emissions unit number, if assigned.

(d) Identification of the VOC emission requirement, the means of compliance and the compliance date for the solvent cleaning operation.

(e) Regarding an air pollution permit for the solvent cleaning operation, whichever of the following is applicable;

(i) Submission of an application for an operating permit, a permit modification, or an operating permit renewal in accordance with rule 3745-31-02 of the Administrative Code; or

(ii) Submission of a statement of intent to submit an application for a Title V permit or modification of a Title V permit in accordance with paragraph (B) of rule 3745-77-02 or rule 3745-77-06 of the Administrative Code, respectively.

(2) The owner or operator of a facility that is subject to this rule and that has a solvent cleaning operation with an initial startup date on or after April 2, 2009 of this rule shall notify the Ohio environmental protection agency district office or local air agency in writing that the solvent cleaning operation is subject to this rule. The notification, which shall be submitted not later than either the date of initial startup of the solvent cleaning operation or June 1, 2009, whichever is later, and shall provide the information listed under paragraph (I)(1) of this rule. The application for an installation permit under rule 3745-31-02 of the Administrative Code may be used to fulfill the notification requirements of this paragraph.

(3) Compliance certification.

(a) The owner or operator of a facility that is subject to this rule shall notify the Ohio environmental protection agency district office or local air agency in writing within thirty days following the completion of any of the following requirements:

(i) For a solvent cleaning operation subject to the VOC emission requirements in paragraphs (C)(1) to (C)(4) of this rule, the first documented achievement of compliance with the requirements; or

(ii) For a solvent cleaning operation subject to the VOC emission control requirement in paragraph (C)(5) of this rule:

(a) The completion of installation and initial use of a VOC emission control system for the solvent cleaning operation;

(b) The completion of installation and initial use of any monitoring devices required under paragraph (G) of this rule for the solvent cleaning operation; and

(c) The completion of any compliance testing conducted in accordance with paragraph (E) of this rule to demonstrate compliance with the applicable control requirement.

(b) The compliance certification under paragraph (I)(3)(a) of this rule shall provide the following, where applicable:

(i) A description of the requirements.

(ii) A description of the VOC emission control system.

(iii) A description of the monitoring devices.

(iv) A description of the records that document continuing compliance.

(v) The results of any compliance tests, including documentation of test data.

(vi) The results of any records that document continuing compliance, including calculations.

(vii) A statement by the owner or operator of the affected facility as to whether the solvent cleaning operation has complied with the requirement(s).

~~(J)~~(J) Requirements for an owner or operator of an industrial solvent cleaning facility that determines they are not subject to the requirements of this rule.

(1) The owner or operator of an industrial solvent cleaning facility that determines the total actual VOC emissions, before the application of air pollution control systems, from all industrial solvent cleaning processes at the facility are not equal to or greater than the limitation specified in paragraph (A)(1)(c) of this rule, and, therefore, the facility is not subject to the requirements in paragraphs (B) to (I) of this rule, shall select one of the following methods and maintain the following records for a period of five years. Records should not include those cleaning operations exempt pursuant to paragraphs (A)(2), (D)(1) and (D)(2) of this rule.

(a) Monthly recordkeeping method.

(i) Total pounds or gallons of each industrial cleaning solvent used per calendar month;

(ii) VOC content (per cent by weight and pounds per gallon) of each industrial cleaning solvent used per calendar month;

(iii) The total monthly VOC emissions, before the application of capture systems and control devices, in pounds for all industrial cleaning solvent employed per calendar month; and

(iv) The rolling twelve-month summation of VOC emissions, in tons, before the application of control systems and devices. The rolling twelve-month summation shall be calculated as the total VOC emissions for the current calendar month, plus the total VOC emissions from the previous eleven calendar months.

(b) Daily emissions method.

Provided total VOC emissions are always less than 15.0 pounds per day, the owner or operator may elect to maintain the following records in lieu of the records required under paragraph (J)(1)(a) of this rule:

(i) Total pounds or gallons of each industrial cleaning solvent used per day;

(ii) VOC content (per cent by weight and pounds per gallon) of each industrial cleaning solvent used per day; and

(iii) The total daily VOC emissions, before the application of capture systems and control devices, in pounds for all industrial cleaning solvent employed per day.

Effective: 05/12/2011

R.C. 119.032 review dates: 08/25/2013

CERTIFIED ELECTRONICALLY
Certification

05/02/2011
Date

Promulgated Under: 119.03
Statutory Authority: 3704.03(E)
Rule Amplifies: 3704.03(A), 3704.03(E)
Prior Effective Dates: 4/2/2009

3745-21-24 **Flat wood paneling coatings.**

[Comment: For dates of non-regulatory government publications, publications of recognized organizations and associations, federal rules, and federal statutory provisions referenced in this rule, see paragraph (JJ) of rule 3745-21-01 of the Administrative Code titled "Reference to materials."]

(A) Applicability.

(1) The requirements of this rule shall apply to any facility that meets both of the following criteria:

(a) The facility is located in Ashtabula, Cuyahoga, Geauga, Lake, Lorain, Medina, Portage, or Summit county.

(b) The facility has total actual VOC emissions from all flat wood paneling coating lines that are equal to or greater than 15.0 pounds of VOC emissions per day, before the application of capture and control devices.

(B) Definitions.

The definitions applicable to this rule are contained in paragraphs (A), (B), and (FF) of rule 3745-21-01 of the Administrative Code.

(C) VOC emission control requirements.

(1) VOC content limitations.

The owner or operator of a facility that is subject to this rule shall not apply any flat wood paneling coating that exceeds the VOC content limitations specified in the table of this rule:

-Table - VOC Content Limitations-

Categories	VOC Limitations (pounds per gallon, excluding water and exempt solvents)	VOC Limitations (pounds per gallon of solids)
Printed interior panels made of hardwood, plywood, or thin particleboard.	2.1	2.9
Natural finish hardwood plywood panels.	2.1	2.9
Class 2 finishes on hardboard panels.	2.1	2.9
Tileboard.	2.1	2.9
Exterior siding.	2.1	2.9

(2) As an alternative to the VOC emission limitations specified in the table of this rule, the owner or operator of a facility may choose to vent all VOC emissions to a control device with a minimum overall control efficiency of ninety per cent, by weight.

(D) Application equipment requirements.

The owner or operator of a facility shall not apply coatings to wood products subject to the provisions of this rule unless the coating is applied with properly operating equipment, in accordance with proper operating procedures, and by the use of one of the following methods:

(1) Electrostatic application;

(2) High volume, low pressure (HVLP) spray;

(3) Hand roller;

(4) Flow coat;

(5) Roll coater;

(6) Dip coat;

(7) Paint brush; or

(8) Detailing or touch-up guns.

(E) Work practice standards.

The owner or operator of a facility using VOC-containing materials in any flat wood paneling coating line shall ensure that VOC emissions are minimized by incorporating the following procedures:

(1) Store all VOC coatings, thinners, and cleaning materials in closed containers;

(2) Minimize spills of VOC containing coatings and thinners, and cleanup any spills immediately;

(3) Convey any coating, thinners, and cleaning materials in closed containers or pipes; and

(4) Keep mixing vessels that contain VOC coatings or other materials closed except when specifically in use.

(5) Minimize emissions of VOC during cleaning of storage, mixing and conveying equipment.

(F) Record keeping and reporting.

The owner or operator of a facility that is subject to this rule shall meet the record keeping and reporting requirements, as applicable, in paragraph (B)(3) of rule 3745-21-09 of the Administrative Code.

(G) Compliance test methods for coatings.

The VOC content and solids content of a coating shall be determined by the owner or operator in accordance with paragraph (B) of rule 3745-21-10 of the Administrative Code, wherein formulation data or USEPA method 24 procedures (which include various ASTM measurement methods) may be employed.

(H) Compliance tests for VOC emission control systems.

(1) For a VOC emission control system used to comply with paragraph (C)(2) of this rule, the owner or operator shall conduct a compliance test to determine the capture efficiency of the capture system, the control efficiency of the control device (or each control device if a combination of control devices is employed), and the overall control efficiency of the VOC emission control system in accordance with paragraph (C) of rule 3745-21-10 of the Administrative Code wherein USEPA method 25 or 25A shall be used for determining the concentration of VOC in a gas stream.

(2) During the compliance test described in paragraph (H)(1) of this rule that demonstrates compliance, the owner or operator shall establish the operating limits (operating parameter values) for the monitoring devices as follows:

(a) If the control device is a thermal oxidizer, establish the operating limit as follows:

(i) Monitor and record the combustion temperature either in the firebox of the thermal oxidizer or immediately downstream of the firebox before any substantial heat exchange occurs at least once every fifteen minutes during each of the three runs of the compliance test.

(ii) Calculate and record the average combustion temperature maintained during the compliance test. This average combustion temperature is the minimum operating limit for the thermal oxidizer.

(b) If the control device is a catalytic oxidizer, establish the operating limits according to either paragraphs (H)(2)(b)(i) and (H)(2)(b)(ii) or paragraphs (H)(2)(b)(iii) and (H)(2)(b)(iv) of this rule.

(i) Monitor and record the temperature just before the catalyst bed and the temperature difference across the catalyst bed at least once every

fifteen minutes during each of the three test runs comprising a compliance test.

(ii) Calculate and record the average temperature just before the catalyst bed and the average temperature difference across the catalyst bed maintained during the compliance test. These are the minimum operating limits for the catalytic oxidizer.

(iii) Monitor and record the temperature just before the catalyst bed at least once every fifteen minutes during each of the three test runs of the compliance test. Use this recorded temperature data to calculate and record the average temperature before the catalyst bed during the performance test. This is the minimum operating limit for the catalytic oxidizer.

(iv) Develop and implement an inspection and maintenance plan for the catalytic oxidizer(s) for which the owner or operator elects to monitor according to paragraph (H)(2)(b)(iii) of this rule. The plan must address, at a minimum, the elements specified in paragraphs (H)(2)(b)(iv)(a) to (H)(2)(b)(iv)(c) of this rule.

(a) Conduct an annual sampling and analysis of the catalyst activity (i.e., conversion efficiency) following the manufacturer's or catalyst supplier's recommended procedures. If problems are found during the catalyst activity test, the owner or operator shall replace the catalyst bed or take other corrective action consistent with the manufacturer's recommendations.

(b) Conduct monthly external inspection of the catalytic oxidizer system, including the burner assembly and fuel supply lines for problems and, as necessary, adjust the equipment to assure proper air-to-fuel mixtures.

(c) Conduct annual internal inspection of the catalyst bed to check for channeling, abrasion, and settling. If problems are found during the annual internal inspection of the catalyst, the owner or operator shall replace the catalyst bed or take other corrective action consistent with the manufacturer's recommendations. If the catalyst bed is replaced and is not of like or better kind and quality as the old catalyst, then the owner or operator shall conduct a new compliance test to determine the control efficiency of the catalytic oxidizer according to paragraph (G)(1) of this rule. If a catalyst bed is replaced and the replacement catalyst is of like or better kind and quality as the old catalyst, then a new compliance test to determine the control efficiency of the catalytic oxidizer is not required and the previously established operating limits for that catalytic oxidizer may be used.

(c) If the control device is a regenerative carbon adsorber, establish the operating limits as follows:

(i) Monitor and record the total regeneration desorbing gas (e.g., steam or nitrogen) mass flow for each regeneration cycle, and the carbon bed temperature after each carbon bed regeneration and cooling cycle for the regeneration cycle either immediately preceding or immediately following the compliance test.

(ii) The operating limits for the regenerative carbon adsorber are the minimum total desorbing gas mass flow recorded during the regeneration cycle and the maximum carbon bed temperature recorded after the cooling cycle.

(d) If the control device includes a concentrator, establish operating limits for the concentrator as follows:

(i) Monitor and record the desorption concentrate stream gas temperature at least once every fifteen minutes during each of the three runs of the compliance test.

(ii) Use the data collected during the compliance test to calculate and record the average temperature. This is the minimum operating limit for the desorption concentrate gas stream temperature.

(iii) Monitor and record the pressure drop of the dilute stream across the concentrator at least once every fifteen minutes during each of the three runs of the performance test.

(iv) Use the data collected during the compliance test to calculate and record the average pressure drop. This is the minimum operating limit for the pressure drop of the dilute stream across the concentrator.

(e) If the capture system is a permanent total enclosure, the operating limit is either one of the following, based on the criteria of a permanent total enclosure.

(i) The pressure drop across the enclosure shall be at least 0.007 inch of water.

(ii) The average facial velocity of air through all natural draft openings shall be at least two hundred feet per minute.

(f) If the capture system is a not a permanent total enclosure, establish an operating limit for each separate capture device in the capture system as follows:

(i) Monitor and record either the gas volumetric flow rate or the duct static pressure for each separate capture device in the emission capture system at least once every fifteen minutes during each of the three test runs of the compliance test for capture efficiency at a point in the duct between the capture device and the control device inlet.

(ii) Calculate and record the average gas volumetric flow rate or average duct static pressure for the three test runs for each capture device. This average gas volumetric flow rate or average duct static pressure is the minimum operating limit for that specific capture device.

(I) Compliance dates.

(1) The owner or operator of a facility that is subject to this rule shall comply with the requirements of this rule no later than the following dates:

(a) For any flat wood paneling coating line located in Ashtabula, Cuyahoga, Geauga, Lake, Lorain, Medina, Portage, or Summit county for which installation commenced before April 2, 2009, the compliance date of the flat wood paneling coating line is April 2, 2010 or date of initial startup of the operation, whichever is later.

(b) For any flat wood paneling coating line located in Ashtabula, Cuyahoga, Geauga, Lake, Lorain, Medina, Portage, or Summit county for which installation commenced on or after April 2, 2009, the compliance date of the flat wood paneling coating line is the initial startup date of the flat wood paneling coating line.

(J) Requirements on applicability notification, compliance certification, and permit application.

(1) The owner or operator of a facility that is subject to this rule, is located in Ashtabula, Cuyahoga, Geauga, Lake, Lorain, Medina, Portage, or Summit county, and that has a flat wood paneling coating line with an initial startup date before April 2, 2009 shall notify the Ohio environmental protection agency district office or local air agency in writing that the flat wood panel coating line is subject to this rule. The notification, which shall be submitted not later than June 1, 2009 (or within sixty days after the flat wood paneling coating line becomes subject to this rule), shall provide the information specified in paragraph (J)(3) of this rule.

(2) The owner or operator of a facility that is subject to this rule, is located in Ashtabula, Cuyahoga, Geauga, Lake, Lorain, Medina, Portage, or Summit county, and that has a flat wood panel coating line with an initial startup date on or after April 2, 2009 shall notify the Ohio environmental protection agency district office or local air agency in writing that the flat wood paneling coating line is subject to this rule. The notification, which shall be submitted not later than either the date of initial startup of the flat wood paneling coating line or by

June 1, 2009, whichever is later, and shall provide the information listed under paragraph (J)(3) of this rule. The application for an installation permit under rule 3745-31-02 of the Administrative Code may be used to fulfill the notification requirements of this paragraph.

(3) The notification required in paragraphs (J)(1) to (J)(2) of this rule shall include the following information:

(a) Name and address of the owner or operator.

(b) Address (i.e., physical location) of the affected facility.

(c) Description of the solvent cleaning operation and Ohio environmental protection agency emissions unit number, if assigned.

(d) Identification of the VOC emission requirement, the means of compliance and the compliance date for the flat wood paneling coating operation.

(e) Regarding an air pollution permit for the flat wood paneling coating operation, whichever of the following is applicable;

(i) Submission of an application for an operating permit, a permit modification, or an operating permit renewal in accordance with rule 3745-31-02 of the Administrative Code; or

(ii) Submission of a statement of intent to submit an application for a Title V permit or modification of a Title V permit in accordance with paragraph (B) of rule 3745-77-02 or rule 3745-77-08 of the Administrative Code, respectively.

(K) Requirements for an owner or operator of a flat wood paneling coating line that determines they are not subject to the requirements of this rule.

(1) When establishing that the facility's total actual VOC emissions from all of the flat wood paneling coating lines (before the application of capture systems and control devices) are less than 15.0 pounds of VOCs per day, the owner or operator shall maintain the following daily records:

(a) The total gallons of each flat wood paneling coating employed;

(b) The VOC content of each flat wood paneling coating employed; and

(c) The total daily VOC emissions (summation of gallons x VOC content (in pounds per gallon) for all flat wood paneling coating employed).

Effective: 05/12/2011

R.C. 119.032 review dates: 08/25/2013

CERTIFIED ELECTRONICALLY
Certification

05/02/2011
Date

Promulgated Under: 119.03
Statutory Authority: 3704.03(E)
Rule Amplifies: 3704.03(A), 3704.03(E)
Prior Effective Dates: 4/2/2009

3745-21-25 **Control of VOC emissions from reinforced plastic composites production operations.**

[Comment: For dates and availability of non-regulatory government publications, publications of recognized organizations and associations, federal rules, and federal statutory provisions referenced in this rule, see paragraph (HH) of rule 3745-21-01 of the Administrative Code titled "Referenced materials."]

(A) Applicability.

(1) Except as otherwise provided in paragraph (A)(2) of this rule, this rule shall apply to any facility that has reinforced plastic composites production operations.

(2) Excluded from the requirements of this rule, except for the recordkeeping requirements specified under paragraphs (A)(2)(d) and (A)(2)(e) of this rule, are the following:

(a) Any facility that only repairs reinforced plastic composites. Repair includes the non-routine manufacture of individual components or parts intended to repair a larger item as defined in paragraph (GG)(65) of rule 3745-21-01 of the Administrative Code.

(b) Any facility that is a research and development facility as defined under section 3704.01 of the Revised Code.

(c) The production of any reinforced plastic composite that is used in the manufacturing of fiberglass boats within the facility.

(d) Any facility in which the reinforced plastic composites operations not otherwise excluded under paragraphs (A)(2)(a), (A)(2)(b), and (A)(2)(c) of this rule use less than 1.2 tons per year of thermoset resins and gel coats that contain styrene combined. The owner or operator of such facility shall maintain records of the amount (in pounds) of thermoset resins and gel coats used each month that contain styrene. These records shall be retained by the owner or operator for a period of not less than five years and shall be made available to the director or any authorized representative of the director for review during normal business hours.

(e) Any facility that has a potential to emit for VOC of less than 10.0 tons per year for all reinforced plastic composites production operations combined. The owner or operator of such facility shall maintain an up-to-date record of the potential to emit for VOC from all reinforced plastic composites production operations, shall employ emission factors or emission estimates in the calculation of the potential to emit that meet the requirements of paragraph (E) of this rule, shall maintain the records specified in paragraph

(P)(2) of this rule for any sheet molding compound manufacturing machine, and within fifteen days after the end of each month, and shall maintain a record of the VOC emissions from any SMC manufacturing machine for the recent month and the rolling twelve-month period. However, this exclusion is not available for any facility that has, or once had, a potential to emit for VOC equal to or greater than 10.0 tons per year for all reinforced plastic composites production operations combined on or after December 14, 2010.

(3) Upon achieving compliance with this rule, the reinforced plastic composites production operations at the facility are not required to meet the requirements of rule 3745-21-07 of the Administrative Code.

(B) Definitions.

The definitions applicable to this rule are contained in paragraph (GG) of rule 3745-21-01 of the Administrative Code.

(C) Affected operations.

(1) Except as otherwise provided in paragraphs (C)(2) and (C)(3) of this rule, the affected operations consist of all parts of the reinforced plastic composites production facility engaged in the following operations:

(a) Open molding;

(b) Compression/injection molding;

(c) Centrifugal casting;

(d) Continuous lamination;

(e) Continuous casting;

(f) Polymer casting;

(g) Pultrusion;

(h) Sheet molding compound (SMC) manufacturing;

(i) Bulk molding compound (BMC) manufacturing;

(j) Mixing;

(k) Cleaning of equipment used in reinforced plastic composites manufacture;

(l) VOC-containing materials storage; and

(m) Repair operations on reinforced plastic composites parts that are manufactured at the facility.

(2) The following operations and materials are specifically excluded from any requirements in this rule:

(a) Application of mold sealing and release agents;

(b) Mold stripping and cleaning;

(c) Repair of reinforced plastic composites parts that the facility did not manufacture, including non-routine manufacturing of parts;

(d) Personal activities that are not part of the manufacturing operations (such as hobby shops on military bases);

(e) Prepreg materials;

(f) Non-gel coat surface coatings;

(g) Application of putties, polyputties, and adhesives;

(h) Repair or production materials that do not contain resin or gel coat;

(i) Research and development operations as defined under section 3704.01 of the Revised Code;

(j) Polymer casting; and

(k) Any closed molding operation other than compression/injection molding (for example, resin transfer molding).

[Note: The exclusion of certain operations from any requirements of this rule applies only to operations specifically listed in this paragraph. The requirements for any co-located operations still apply. For example, although polymer casting and resin transfer molding operations are specifically excluded from the requirements of this rule, any gel coating, mixing, VOC-containing materials storage, or cleaning operation associated with a polymer casting operation or a resin transfer molding operation is still subject to the requirements of this rule.]

(3) Production resins that must meet military specifications are allowed to meet the monomer content limit contained in that specification. In order for this exemption to be used, the owner or operator shall supply to the appropriate Ohio environmental protection agency district office or local air agency the specifications certified as accurate by the military procurement officer, and those specifications must state a requirement for a specific resin, or a specific resin monomer content. Production resins for which this exemption is used shall be applied with nonatomizing resin application equipment unless the owner or

operator can demonstrate this is infeasible. The owner or operator shall keep a record of the resins for which the owner or operator is using this exemption.

(D) VOC control requirements.

(1) The owner or operator of the reinforced plastic composites production facility shall meet the work practice standards in table 1 of this rule for affected operations.

(2) If the reinforced plastic composites production facility has VOC emissions less than the threshold of one hundred tons of VOC per year from the combination of all open molding, centrifugal casting, continuous lamination/casting, pultrusion, SMC manufacturing, mixing, and BMC manufacturing, the owner or operator shall meet the VOC emissions limits in table 2 of this rule. A facility's VOC emissions threshold shall be calculated in accordance with paragraph (F) of this rule.

(3) Except as provided in paragraph (D)(4) of this rule, if the reinforced plastic composites production facility has VOC emissions equal to or greater than the threshold of one hundred tons of VOC per year from the combination of all open molding, centrifugal casting, continuous lamination/casting, pultrusion, SMC manufacturing, mixing, and BMC manufacturing, the owner or operator shall reduce the total VOC emissions from these operations by at least ninety-five per cent by weight. As an alternative to meeting ninety-five per cent by weight, the owner or operator may meet the VOC emissions limits in table 3 of this rule. A facility's VOC emissions threshold shall be calculated in accordance with paragraph (F) of this rule.

(4) If the reinforced plastic composites production facility manufactures large reinforced plastic composites parts using open molding or pultrusion operations, the specific open molding and pultrusion operations used to produce large parts are not required to reduce VOC emissions by ninety-five weight per cent, but shall meet the emission limits in table 2 of this rule. A large open molding part is defined as a part that, when the final finished part is enclosed in the smallest rectangular six-sided box into which the part can fit, the total interior volume of the box exceeds two hundred fifty cubic feet, or any interior sides of the box exceed fifty square feet. A large pultruded part is a part that exceeds an outside perimeter of twenty-four inches or has more than three hundred fifty reinforcements.

(5) Once a reinforced plastic composites production facility equals or exceeds the one hundred tons of VOC per year threshold of paragraph (D)(3) of this rule on or after December 14, 2009, it is always subject to the requirements of paragraph (D)(3) of this rule, except as otherwise provided in paragraph (D)(6) of this rule.

(6) In the event a reinforced plastic composites production facility equals or exceeds the one hundred tons of VOC per year threshold of paragraph (D)(3) of this rule

on or after December 14, 2009, but reduces its emissions to less than the one hundred tons of VOC per year threshold by no later than the compliance date of this rule, the facility is not subject to the requirements of paragraphs (D)(3) of this rule. If such reinforced plastic composites production facility subsequently equals or exceeds the one hundred tons of VOC per year threshold of paragraph (D)(3) of this rule, then it becomes subject to the requirements of paragraph (D)(3) of this rule.

(7) If the reinforced plastic composites production facility has repair operations subject to this rule, these repair operations shall meet the requirements in table 1 and table 2 of this rule and are not required to meet the ninety-five per cent VOC emissions reduction requirement in paragraph (D)(3) of this rule.

(8) Except where exempted under paragraph (D)(9) of this rule, any owner or operator of a SMC manufacturing machine shall install and operate a VOC emission control system that reduces the VOC emissions from the SMC manufacturing machine by at least ninety-five per cent by weight (i.e., an overall control efficiency of at least ninety-five per cent by weight).

(9) Exempted from the requirement of paragraph (D)(8) of this rule is any uncontrolled SMC manufacturing machine with VOC emissions of less than 25.0 tons per rolling twelve-month period.

(10) If an add-on control device is used to comply with this rule, such add-on control device shall meet all the requirements contained in 40 CFR Part 63, Subpart SS. The owner or operator shall also establish each control device operating limit in 40 CFR Part 63, Subpart SS, that applies.

(11) Alternative requirements.

The provisions of paragraphs (D)(1) to (D)(10) of this rule shall not apply to any emissions unit that meets the following requirements:

(a) The director has determined that best available technology for the emissions unit, as required by rule 3745-31-05 of the Administrative Code, is a control requirement or emission limitation that is either less stringent than or inconsistent with the requirements of paragraph (D) of this rule. Best available technology shall be defined in accordance with division (F) of section 3704.01 of the Revised Code and, for purposes of this paragraph, shall provide, where an emission limitation is applicable, the lowest emission limitation that the emissions unit is capable of meeting by the application of control technology that is reasonably available considering technological and economic feasibility. Also, for an emissions unit located within an ozone nonattainment area, the best available technology determination must comply with section 193 (general savings clause) of the Clean Air Act.

(b) The USEPA has informed the Ohio EPA, in writing, prior to the issuance of a final permit-to-install for the emissions unit, that the agency has no objection to the issuance of the final permit and the control requirement or emission limitation specified therein.

(c) A final permit-to-install has been issued for the emissions unit pursuant to Chapter 3745-31 of the Administrative Code. The permit-to-install shall contain terms and conditions that specify the control requirement or emission limitation that is the basis for the director's best available technology determination for the emissions unit, as described in paragraph (D)(11)(a) of this rule, and the permit-to-install shall be issued by the Ohio EPA in a manner that makes the control requirement or emission limitation federally enforceable.

(d) USEPA has approved the alternative limitation as a revision to the Ohio state implementation plan.

(E) Procedures for determination of VOC emissions factors for reinforced plastic composites production operations and determination of monomer content of resins and gel coats.

(1) Emissions factors are used in this rule to determine compliance with certain VOC emissions limits in table 2 and table 3 of this rule and to calculate VOC emissions. A person may use the equations in table 1 to Subpart WWWW of 40 CFR 63 to calculate such emissions factors or may use any VOC emissions factor approved by USEPA, such as emission factors or emission factor equations from AP-42. These equations and emissions factors are intended to provide a method for one to demonstrate compliance without the need to conduct a VOC emissions test. In lieu of these equations and emissions factors, the owner or operator can elect to use site-specific VOC emissions factors to demonstrate compliance and to calculate VOC emissions provided the site-specific VOC emissions factors are incorporated in the facility's air emissions permit and are based on actual facility VOC emissions test data using the test procedures in 40 CFR 63.5850 or paragraph (C) of rule 3745-21-10 of the Administrative Code. Stack test data for the facility shall supersede emission factors and other emission estimating techniques.

(2) In order to determine the monomer content of resins and gel coats, the owner or operator may rely on information provided by the material manufacturer, such as manufacturer's formulation data and material safety data sheets (MSDS), using the procedures specified in paragraphs (E)(2)(a) to (E)(2)(c) of this rule, as applicable.

(a) Include in the total monomer content each monomer compound that is present at 0.1 per cent by mass or more for OSHA-defined carcinogens, as specified in 29 CFR 1910.1200(d)(4) and at 1.0 per cent by mass or more for other monomer compounds.

(b) If the monomer content is provided by the material supplier or manufacturer as a range, the owner or operator shall use the upper limit of the range for determining compliance. If a separate measurement of the total monomer content, such as an analysis of the material by USEPA method 311 of appendix A to 40 CFR Part 63, exceeds the upper limit of the range of the total monomer content provided by the material supplier or manufacturer, then the owner or operator shall use the measured monomer content to determine compliance.

(c) If the monomer content is provided as a single value, the owner or operator may use that value to determine compliance. If a separate measurement of the total monomer content is made and is less than two percentage points higher than the value for total monomer content provided by the material supplier or manufacturer, then the owner or operator still may use the provided value to demonstrate compliance. If the measured total monomer content exceeds the provided value by two percentage points or more, then the owner or operator shall use the measured total monomer content to determine compliance.

(F) Calculation of facility's VOC emissions threshold.

(1) To calculate the facility's VOC emissions threshold in tons per year for purposes of determining which requirements apply under paragraph (D) of this rule, the owner or operator shall use the procedures in either paragraph (F)(2) of this rule for new facilities prior to startup, or paragraph (F)(3) of this rule for existing facilities and new facilities after startup. A facility's VOC emissions threshold pertains to the following operations: open molding, centrifugal casting, continuous lamination/casting, pultrusion, SMC manufacturing, mixing, and BMC manufacturing. The owner or operator is not required to calculate or report emissions under this paragraph if the facility does not have any of those operations. However, emissions calculation and emission reporting procedures in other paragraphs of this rule still apply. For the facility's VOC emissions threshold, calculate VOC emissions prior to any add-on control device, and do not include VOC emissions from any resin or gel coat used in operations subject to the boat manufacturing NESHAP, 40 CFR Part 63, Subpart VVVV, or from the manufacture of large parts as defined in paragraph (D)(4) of this rule. A "new facility" means a facility that has one or more operations specified in paragraph (F)(1) of this rule in which all such operations have a startup on or after December 14, 2009. An "existing facility" means a facility that has one or more operations specified in paragraph (F)(1) of this rule in which and at least one such operation has a startup prior to December 14, 2009.

(2) For new facilities prior to startup, the owner or operator shall calculate a weighted average VOC emissions factor for the operations specified in paragraph (F)(1) of this rule on a pounds of VOC per ton of resin, monomer, or gel coat basis. Base the weighted average on the projected operation for the twelve months subsequent to facility startup. Multiply the weighted average VOC emissions factor by projected resin, monomer, or gel coat use over the

same period. The owner or operator may calculate a VOC emissions factor based on the factors in table 1 to Subpart WWWW of 40 CFR 63, or may use any VOC emissions factor approved by USEPA, such as factors from AP-42, or VOC emissions test data from similar facilities. The organic HAP emissions factors in table 1 to Subpart WWWW of 40 CFR 63 are equivalent to the VOC emissions factors for this rule.

(3) For existing facilities and new facilities after startup, the owner or operator may use the procedures in either paragraph (F)(3)(a) or (F)(3)(b) of this rule for the operations specified in paragraph (F)(1) of this rule. If the emission factors for an existing facility have changed over the period of time prior to its initial compliance date due to incorporation of pollution-prevention control techniques, the existing facility may base the average emission factor on its operations as they exist on the compliance date. If an existing or new facility has accepted an enforceable permit limit that would result in less than one hundred tons per year (per rolling twelve-month period) of VOC measured prior to any add-on controls, and can demonstrate that it will operate at that level subsequent to the compliance date, it can be deemed to be below the one hundred tons per year threshold.

(a) Use a calculated emission factor.

Calculate a weighted average VOC emissions factor on a pounds per ton of resin, monomer, or gel coat basis. Base the weighted average on the prior twelve months of operation. Multiply the weighted average VOC emissions factor by resin, monomer, or gel coat use over the same period. The owner or operator may calculate this VOC emissions factor based on the equations in table 1 to subpart WWWW of 40 CFR 63, or the owner or operator may use any VOC emissions factor approved by USEPA, such as emission factors or emission factor equations from AP-42, or site-specific VOC emissions factors if they are supported by VOC emissions test data. The organic HAP emissions factors in table 1 to Subpart WWWW of 40 CFR 63 are equivalent to the VOC emissions factors for this rule.

(b) Conduct performance testing.

Conduct performance testing using the test procedures in 40 CFR 63.5850 or paragraph (C) of rule 3745-21-10 of the Administrative Code to determine a site-specific VOC emissions factor in units of pounds of VOC per ton of resin, monomer, or gel coat used. Conduct the test under conditions expected to result in the highest possible VOC emissions. Multiply this factor by annual resin, monomer, or gel coat use to determine annual VOC emissions. This calculation shall be repeated and reported annually.

(c) Pultrusion operations.

For pultrusion operations employing enclosures or resin injection (direct or preform) pursuant to paragraph (I)(5)(b) of this rule, actual emissions may be calculated as four tenths and one tenth, respectively, of open line emissions, where open line emissions are calculated as specified in air permits covering these operations.

(4) Existing facilities shall initially perform this calculation based on their twelve months of operation prior to December 14, 2009, and include this information with their applicability notification report. Existing facilities shall repeat the calculation based on their resin, monomer, and gel coat use in the twelve months prior to their compliance date, and submit this information with their initial compliance report.

(5) After the initial compliance date, existing and new facilities shall calculate VOC emissions over the twelve-month period ending June thirtieth or December thirty-first, whichever date is the first date following the compliance date specified in paragraph (R) of this rule. Subsequent calculations should cover the periods in the semiannual compliance reports.

(G) Options for meeting the VOC emissions limits for open molding and centrifugal casting operations.

The owner or operator shall use one of the following methods in paragraphs (G)(1) to (G)(4) of this rule to meet the VOC emissions limits for open molding or centrifugal casting operations specified in table 2 or table 3 of this rule. The owner or operator may use any control method that reduces VOC emissions, including reducing resin and gel coat monomer content, changing to nonatomized mechanical application, using covered curing techniques, and routing part or all of the VOC emissions to an add-on control. The owner or operator may use different compliance options for the different operations listed in table 2 or table 3 of this rule. The necessary calculations shall be completed within thirty days after the end of each month. The owner or operator may switch between the compliance options in paragraphs (G)(1) to (G)(4) of this rule. When the owner or operator changes to an option based on a twelve-month rolling average, the owner or operator shall base the average on the previous twelve months of data calculated using the compliance option the owner or operator is changing to, unless the owner or operator was previously using an option that did not require the owner or operator to maintain records of resin and gel coat use. In this case, the owner or operator shall immediately begin collecting resin and gel coat use data and demonstrate compliance twelve months after changing options.

(1) Demonstrate that an individual resin or gel coat, as applied, meets the applicable emission limit in table 2 or table 3 of this rule.

(a) Calculate the actual VOC emissions factor for each different process stream within each operation type. A process stream is defined as each individual combination of resin or gel coat, application technique, and control technique. Process streams within operations types are considered different

from each other if any of the following four characteristics vary: the neat resin plus or neat gel coat plus monomer content, the gel coat type, the application technique, or the control technique. The owner or operator shall calculate VOC emissions factors for each different process stream by using the appropriate equations in table 1 to Subpart WWWW of 40 CFR 63 for open molding and for centrifugal casting, or site-specific VOC emissions factors discussed in paragraph (E) of this rule. The emission factor calculation should include any and all emission reduction techniques used including any add-on controls. If vapor suppressants are used to reduce VOC emissions, the owner or operator shall determine the vapor suppressant effectiveness (VSE) by conducting testing according to the procedures specified in appendix A to Subpart WWWW of 40 CFR part 63. If an add-on control device is used to reduce VOC emissions, the owner or operator shall determine the add-on control factor by conducting capture and control efficiency testing using the procedures specified in 40 CFR 63.5850. The VOC emissions factor calculated from the equations in table 1 to Subpart WWWW of 40 CFR 63, or a site-specific emissions factor, is multiplied by the add-on control factor to calculate the VOC emissions factor after control. The add-on control factor used in the VOC emissions factor equations is calculated from the following equation:

$$Add\text{-}on\ Control\ Factor = 1 - \frac{\%\ Control\ Efficiency}{100}$$

where:

Per cent control efficiency = value calculated from VOC emissions test measurements made according to the requirements of 40 CFR 63.5850.

(b) If the calculated emission factor is less than or equal to the appropriate emission limit, the owner or operator has demonstrated that this process stream complies with the emission limit in table 2 of this rule. It is not necessary that all process streams, considered individually, demonstrate compliance to use this option for some process streams. However, for any individual resin or gel coat being used, if any of the process streams that include that resin or gel coat are to be used in any averaging calculations described in paragraphs (G)(2) to (G)(4) of this rule, then all process streams using that individual resin or gel coat shall be included in the averaging calculations.

(2) Demonstrate that, on average, the individual VOC emissions limits for each unique combination of operation type and resin application method or gel coat type shown in table 2 of this rule that applies to the facility are met.

(a) Group the process streams described in paragraph (G)(1) of this rule by operation type and resin application method or gel coat type listed in table 2 of this rule and then calculate a weighted average emission factor based on the amounts of each individual resin or gel coat used for the last twelve months. To do this, sum the product of each individual VOC emissions

factor calculated in paragraph (G)(1)(a) of this rule and the amount of neat resin plus and neat gel coat plus usage that corresponds to the individual factors and divide the numerator by the total amount of neat resin plus and neat gel coat plus used in that operation type as shown in the following equation:

$$\text{Average VOC emissions factor} = \frac{\sum_{i=1}^{n} (\text{Actual Process Stream } EF_i * \text{Material}_i)}{\sum_{i=1}^{n} \text{Material}_i}$$

where:

Actual Process Stream EF_i = actual VOC emissions factor for process stream i, pounds of VOC per ton of neat resin plus or neat gel coat plus.

Material_i = the amount of neat resin plus or neat gel coat plus used during the last twelve calendar months for process stream i, tons.

n = number of process streams where the owner or operator calculated a VOC emissions factor.

(b) The owner or operator may, but is not required to, include process streams where the owner or operator has demonstrated compliance as described in paragraph (G)(1) of this rule, subject to the limitations described in paragraph (G)(1)(b) of this rule, and the owner or operator is not required to and should not include process streams for which the owner or operator will demonstrate compliance using the procedures in paragraph (G)(4) of this rule.

(c) Compare each VOC emissions factor calculated in paragraph (G)(2)(a) of this rule with its corresponding VOC emissions limit in table 2 or table 3 of this rule. If all emissions factors are equal to or less than their corresponding emission limits, then the operation is in compliance.

(3) Demonstrate compliance with a weighted average VOC emissions limit.

Demonstrate each month that each weighted average of the VOC emissions limits in table 2 or table 3 of this rule that apply are being met. When using this option, the owner or operator shall demonstrate compliance with the weighted average VOC emissions limit for all open molding operations, and then separately demonstrate compliance with the weighted average VOC emissions limit for all centrifugal casting operations. Open molding operations and centrifugal casting operations may not be averaged with each other.

(a) Each month calculate the weighted average VOC emissions limit for all open molding operations and the weighted average VOC emissions limit for all centrifugal casting operations for the facility for the last twelve-month

period to determine the VOC emissions limit the owner or operator shall meet. To do this, multiply the individual VOC emissions limits in table 2 or table 3 of this rule for each open molding (centrifugal casting) operation type by the amount of neat resin plus or neat gel coat plus used in the last twelve months for each open molding (centrifugal casting) operation type, sum these results, and then divide this sum by the total amount of neat resin plus and neat gel coat plus used in open molding (centrifugal casting) over the last twelve months as shown in the following equation:

$$\text{Weighted Average VOC Emissions Limit} = \frac{\sum_{i=1}^{n} (EL_i * \text{Material}_i)}{\sum_{i=1}^{n} \text{Material}_i}$$

where:

EL_i = VOC emissions limit for operation type i, pounds per ton from table 2 or table 3 of this rule.

Material_i = amount of neat resin plus or neat gel coat plus used during the last twelve-month period for operation type i, tons.

n = number of operations.

(b) Each month calculate the weighted average VOC emissions factor for open molding and centrifugal casting. To do this, multiply the actual open molding (centrifugal casting) operation VOC emissions factors calculated in paragraph (G)(2)(a) of this rule and the amount of neat resin plus and neat gel coat plus used in each open molding (centrifugal casting) operation type, sum the results, and divide this sum by the total amount of neat resin plus and neat gel coat plus used in open molding (centrifugal casting) operations as shown in the following equation:

$$\text{Actual Weighted Average VOC Emissions Factor} = \frac{\sum_{i=1}^{n} (\text{Actual Operation } EF_i * \text{Material}_i)}{\sum_{i=1}^{n} \text{Material}_i}$$

where:

Actual Operation EF_i = Actual VOC emissions factor for operation type i, pounds of VOC per ton of neat resin plus or neat gel coat plus.

Material_i = amount of neat resin plus or neat gel coat plus used during the last twelve calendar months for operation type i, tons.

n = number of operations.

(c) Compare the values calculated in paragraphs (G)(3)(a) and (G)(3)(b) of this rule. If each twelve-month rolling average VOC emissions factor is less than or equal to the corresponding twelve-month rolling average VOC emissions limit, then the operation is in compliance.

(4) Meet the VOC emissions limit for one application method and use the same resins for all application methods of that resin type.

This option is limited to resins of the same type. The resin types for which this option may be used are noncorrosion-resistant, corrosion-resistant and/or high strength, and tooling.

(a) For any combination of manual resin application, mechanical resin application, filament application, or centrifugal casting, the owner or operator may elect to meet the VOC emissions limit for any one of these application methods and use the same resin in all of the resin application methods listed in this paragraph. Table 4 of this rule presents the possible combinations based on the owner or operator selecting the application process that results in the highest allowable monomer content resin. If the resin's monomer content is below the applicable value shown in the table 4 of this rule, the resin is in compliance.

(b) The owner or operator may also use a weighted average monomer content for each application method described in paragraph (G)(4)(a) of this rule. Calculate the weighted average monomer content monthly. Use the equation in paragraph (G)(2)(a) of this rule except substitute monomer content for VOC emissions factor. The operation is in compliance if the weighted average monomer content based on the last twelve months of resin use is less than or equal to the applicable monomer contents in the table 4 of this rule.

(c) The owner or operator may simultaneously use the averaging provisions in paragraph (G)(2) or (G)(3) of this rule to demonstrate compliance for any operations and/or resins the owner or operator does not include in the compliance demonstrations in paragraphs (G)(4)(a) and (G)(4)(b) of this rule. However, any resins for which the owner or operator claims compliance under the option in paragraphs (G)(4)(a) and (G)(4)(b) of this rule shall not be included in any of the averaging calculations described in paragraph (G)(2) or (G)(3) of this rule.

(d) The owner or operator does not have to keep records of resin use for any of the individual resins where the owner or operator demonstrates compliance under the option in paragraph (G)(4)(a) of this rule unless the owner or operator elects to include that resin in the averaging calculations described in paragraph (G)(4)(b) of this rule.

(H) Options for meeting the VOC emissions limits for continuous lamination/casting operations.

For continuous casting/lamination operations, the owner or operator shall use one or more of the options listed in paragraphs (H)(1) to (H)(4) of this rule to meet the VOC emissions limits specified in table 2 or table 3 of this rule and shall use the calculation procedures provided in paragraphs (J) to (M) of this rule.

(1) Compliant line option.

Demonstrate that each continuous lamination line and each continuous casting line complies with the applicable VOC emissions limit.

(2) Averaging option.

Demonstrate that all continuous lamination and continuous casting lines combined, comply with the applicable VOC emissions limit.

(3) Add-on control device option.

If the operation must meet the 58.5 weight per cent VOC emissions reduction limit in table 2 of this rule, the owner or operator has the option of demonstrating that the operation achieves ninety-five per cent reduction of all wet-out area VOC emissions.

(4) Combination option.

Use any combination of options in paragraphs (H)(1), (H)(2), and (H)(3) of this rule.

(I) Options for meeting the standards for pultrusion operations subject to the sixty per cent by weight VOC emissions reductions requirement.

For pultrusion operations, the owner or operator shall use one or more of the options in paragraphs (I)(1) to (I)(5) of this rule to meet the sixty weight per cent VOC emissions limit in table 2 of this rule.

(1) Achieve an overall reduction in VOC emissions of sixty per cent by weight capturing the VOC emissions and venting them to a control device or any combination of control devices. Conduct capture and destruction efficiency testing as specified in 40 CFR 63.5850 to determine the per cent VOC emissions reduction.

(2) Design, install, and operate wet area enclosures and resin drip collection systems on pultrusion machines that meet the criteria in paragraphs (I)(2)(a) to (I)(2)(j) of this rule.

(a) The enclosure shall cover and enclose the open resin bath and the forming area in which reinforcements are pre-wet or wet-out and moving toward the

die(s). The surfaces of the enclosure shall be closed except for openings to allow material to enter and exit the enclosure.

(b) For open bath pultrusion machines with a radio frequency pre-heat unit, the enclosure shall extend from the beginning of the resin bath to within 12.5 inches or less of the entrance of the radio frequency pre-heat unit. If the stock that is within 12.5 inches or less of the entrance to the radio frequency pre-heat unit has any drip, it shall be enclosed. The stock exiting the radio frequency pre-heat unit is not required to be in an enclosure if the stock has no drip between the exit of the radio frequency pre-heat unit to within 0.5 inches of the entrance of the die.

(c) For open bath pultrusion machines without a radio frequency pre-heat unit, the enclosure shall extend from the beginning of the resin bath to within 0.5 inches or less of the die entrance.

(d) For pultrusion lines with pre-wet area(s) prior to direct die injection, no more than 12.5 inches of open wet stock is permitted between the entrance of the first pre-wet area and the entrance to the die. If the pre-wet stock has any drip, it shall be enclosed.

(e) The total open area of the enclosure shall not exceed two times the cross sectional area of the puller window(s) and shall comply with the requirements in paragraphs (I)(2)(e)(i) to (I)(2)(e)(iii) of this rule.

(i) All areas that are open need to be included in the total open area calculation with the exception of access panels, doors, and/or hatches that are part of the enclosure.

(ii) The area that is displaced by entering reinforcement or exiting product is considered open.

(iii) Areas that are covered by brush covers are considered closed.

(f) Open areas for level control devices, monitoring devices, agitation shafts, and fill hoses shall have no more than 1.0 inch clearance.

(g) The access panels, doors, and/or hatches that are part of the enclosure shall close tightly. Damaged access panels, doors, and/or hatches that do not close tightly shall be replaced.

(h) The enclosure may not be removed from the pultrusion line, and access panels, doors, and/or hatches that are part of the enclosure shall remain closed whenever resin is in the bath, except for the time period discussed in paragraph (I)(2)(i) of this rule.

(i) The maximum length of time the enclosure may be removed from the pultrusion line or the access panels, doors, and/or hatches and may be open,

is thirty minutes per eight-hour shift, forty-five minutes per twelve-hour shift, or ninety minutes per day if the machine is operated for twenty-four hours in a day. The time restrictions do not apply if the open doors or panels do not cause the limit of two times the puller window area to be exceeded. Facilities may average the times that access panels, doors, and/or hatches are open across all operating lines. In that case the average shall not exceed the times shown in this paragraph. All lines included in the average shall have operated the entire time period being averaged.

(j) No fans, blowers, and/or air lines may be allowed within the enclosure. The enclosure shall not be ventilated.

(3) Use direct die injection pultrusion machines with resin drip collection systems that meet all the criteria specified in paragraphs (I)(3)(a) to (I)(3)(c) of this rule.

(a) All the resin that is applied to the reinforcement is delivered directly to the die.

(b) No exposed resin is present, except at the face of the die.

(c) Resin drip is captured in a closed system and recycled back to the process.

(4) Use a preform injection system that meets the definition in paragraph (GG)(60) of rule 3745-21-01 of the Administrative Code.

(5) Use any combination of options in paragraphs (I)(1) to (I)(4) of this rule in which different pultrusion lines comply with different options described in paragraphs (I)(1) to (I)(4) of this rule; and

(a) Each individual pultrusion machine meets the sixty per cent reduction requirement; or

(b) The weighted average reduction based on resin throughput of all pultrusion machines combined is sixty per cent. For purposes of the average per cent reduction calculation, wet area enclosures reduce VOC emissions by sixty per cent, and direct die injection and preform injection reduce VOC emissions by ninety per cent. For averaging purposes, zero reduction credit is earned during production on lines that have not installed and operated enclosures or injection systems as described in paragraphs (I)(2) to (I)(4) of this rule.

(J) Calculation of annual uncontrolled and controlled VOC emissions from wet-out area(s) and oven(s) for continuous lamination/casting operations.

To calculate the annual uncontrolled and controlled VOC emissions from the wet-out areas and from the ovens of continuous lamination/casting operations, the owner or operator shall develop uncontrolled and controlled wet-out area and uncontrolled and controlled oven VOC emissions estimation equations or factors to apply to each

formula applied on each line, determine how much of each formula for each end product is applied each year on each line, and assign uncontrolled and controlled wet-out area and uncontrolled and controlled oven VOC emissions estimation equations or factors to each formula. The owner or operator shall determine the overall capture efficiency using the procedures in 40 CFR 63.5850.

(1) To develop uncontrolled and controlled VOC emissions estimation equations and factors, the owner or operator shall, at a minimum, do the following, as specified in paragraphs (J)(1)(a) to (J)(1)(f) of this rule:

(a) Identify each end product and the thickness of each end product produced on the line. Separate end products into the following end product groupings, as applicable: corrosion-resistant gel coated end products, noncorrosion-resistant gel coated end products, corrosion-resistant non-gel coated end products, and noncorrosion-resistant non-gel coated end products. This step creates end product/thickness combinations.

(b) Identify each formula used on the line to produce each end product/thickness combination. Identify the amount of each such formula applied per year. Rank each formula used to produce each end product/thickness combination according to usage within each end product/thickness combination.

(c) For each end product/thickness combination being produced, select the formula with the highest usage rate for testing.

(d) If not already selected, also select the worst-case formula (likely to be associated with the formula with the highest monomer content, type of monomer, application of gel coat, thin product, low line speed, higher resin table temperature) amongst all formulae. (The owner or operator may use the results of the worst-case formula test for all formulae if desired to limit the amount of testing required.)

(e) For each formula selected for testing, conduct at least one test (consisting of three runs). During the test, track information on monomer content and type of monomer, end product thickness, line speed, and resin temperature on the wet-out area table.

(f) Using the test results, develop uncontrolled and controlled VOC emissions estimation equations (or factors) or series of equations (or factors) that best fit the results for estimating uncontrolled and controlled VOC emissions, taking into account the monomer content and type of monomer, end product thickness, line speed, and resin temperature on the wet-out area table.

(2) In lieu of using the method specified in paragraph (J)(1) of this rule for developing uncontrolled and controlled VOC emissions estimation equations and factors, the owner or operator may use either method specified in paragraphs (J)(2)(a) and (J)(2)(b) of this rule, as applicable.

(a) For either uncontrolled or controlled VOC emissions estimates, the owner or operator may use previously established, facility-specific VOC emissions equations or factors, provided they allow estimation of both wet-out area and oven VOC emissions, where necessary, and have been approved by the appropriate Ohio environmental protection agency district office or local air agency. If a previously established equation or factor is specific to the wet-out area only, or to the oven only, then the owner or operator shall develop the corresponding uncontrolled or controlled equation or factor for the other VOC emissions source.

(b) For uncontrolled (controlled) VOC emissions estimates, the owner or operator may use controlled (uncontrolled) VOC emissions estimates and control device destruction efficiency to calculate your uncontrolled (controlled) VOC emissions provided the control device destruction efficiency was calculated at the same time the owner or operator collected the data to develop your facility's controlled (uncontrolled) VOC emissions estimation equations and factors.

(3) The owner or operator shall assign to each formula an uncontrolled VOC emissions estimation equation or factor based on the end product/thickness combination for which that formula is used.

(4) Calculation of annual uncontrolled and annual controlled VOC emissions from wet-out areas and ovens.

(a) To calculate the annual uncontrolled VOC emissions from wet-out areas that do not have any capture and control and from wet-out areas that are captured by an enclosure, but are vented to the atmosphere and not to a control device, multiply each formula's annual usage by its appropriate VOC emissions estimation equation or factor and sum the individual results.

(b) To calculate the annual uncontrolled VOC emissions that escape from the enclosure on the wet-out area, multiply each formula's annual usage by its appropriate uncontrolled VOC emissions estimation equation or factor, sum the individual results, and multiply the summation by one minus the per cent capture (expressed as a fraction).

(c) To calculate the annual uncontrolled oven VOC emissions, multiply each formula's annual usage by its appropriate uncontrolled VOC emissions estimation equation or factor and sum the individual results.

(d) To calculate the annual controlled VOC emissions, multiply each formula's annual usage by its appropriate VOC emissions estimation equation or factor and sum the individual results to obtain total annual controlled VOC emissions.

(5) Where a facility is calculating both uncontrolled and controlled VOC emissions estimation equations and factors, the owner or operator shall test the same

formulae. In addition, the owner or operator shall develop both sets of equations and factors from the same tests.

(K) Determination of the capture efficiency of the enclosure on the wet-out area and the capture efficiency of oven(s) for continuous lamination/casting operations.

(1) The capture efficiency of a wet-out area enclosure is assumed to be one hundred per cent if it meets the design and operation requirements for a permanent total enclosure (PTE) specified in USEPA method 204 of Appendix M to 40 CFR Part 51. If a PTE does not exist, then a temporary total enclosure shall be constructed and verified using USEPA method 204, and capture efficiency testing shall be determined using USEPA methods 204B to E of Appendix M to 40 CFR Part 51.

(2) The capture efficiency of an oven is to be considered one hundred per cent, provided the oven is operated under negative pressure.

(L) Procedures to determine how much neat resin plus is applied to the line and how much neat gel coat plus is applied to the line for continuous lamination/casting operations.

Use the following procedures to determine how much neat resin plus and neat gel coat plus is applied to the line each year:

(1) Track formula usage by end product/thickness combinations.

(2) Use in-house records to show usage. This may be either from automated systems or manual records.

(3) Record daily the usage of each formula/end product combination on each line. This is to be recorded at the end of each run (i.e., when a changeover in formula or product is made) and at the end of each shift.

(4) Sum the amounts from the daily records to calculate annual usage of each formula/end product combination by line.

(M) Calculation of per cent reduction to demonstrate compliance for continuous lamination/casting operations.

The owner or operator shall calculate per cent reduction for continuous lamination/casting operations using any of the methods specified in paragraphs (M)(1) to (M)(4) of this rule.

(1) Compliant line option.

If all of the wet-out areas have a PTE that meets the requirements of USEPA method 204 of Appendix M of 40 CFR Part 51, and all of the wet-out area VOC emissions and oven VOC emissions are vented to an add-on control device, use

the equation in paragraph (M)(1)(a) of this rule to demonstrate compliance. In all other situations, use the equation in paragraph (M)(1)(b) of this rule to demonstrate compliance.

(a)

$$PR = \frac{(Inlet) - (Outlet)}{(Inlet)} \times 100$$

where:

PR = per cent reduction.

Inlet = VOC emissions entering the control device, pounds of VOC per year.

Outlet = VOC emissions exiting the control device to the atmosphere, pounds of VOC per year.

(b)

$$PR = \frac{(WAE_{ci} + O_{ci}) - (WAE_{co} + O_{co})}{(WAE_{ci} + WAE_{u} + O_{ci} + O_{u})} \times 100$$

where:

PR = per cent reduction.

O_{ci} = oven VOC emissions, pounds of VOC per year, vented to a control device.

O_{co} = oven VOC emissions, pounds of VOC per year, from the control device outlet.

O_{u} = oven VOC emissions, pounds of VOC per year, not vented to a control device.

WAE_{ci} = wet-out area VOC emissions, pounds of VOC per year, vented to a control device.

WAE_{co} = wet-out area VOC emissions, pounds of VOC per year, from the control device outlet.

WAE_{u} = wet-out area VOC emissions, pounds of VOC per year, not vented to a control device.

(2) Averaging option.

Use the following equation to calculate per cent reduction.

$$PR = \frac{\left(\sum_{i=1}^{m} WAEi_{ci} + \sum_{j=1}^{n} Oj_{ci}\right) - \left(\sum_{i=1}^{m} WAEi_{co} + \sum_{j=1}^{n} Oj_{co}\right)}{\left(\sum_{i=1}^{m} WAEi_{ci} + \sum_{j=1}^{n} Oj_{ci} + \sum_{i=1}^{m} WAEi_{u} + \sum_{j=1}^{n} Oj_{u}\right)}$$

where:

PR = per cent reduction.

Oj_{ci} = VOC emissions from oven j, pounds of VOC per year, sent to a control device.

Oj_{co} = VOC emissions from oven j, pounds of VOC per year, at the outlet of the control device.

Oj_{u} = VOC emissions from oven j, pounds of VOC per year, not sent to a control device.

$WAEi_{ci}$ = wet-out area VOC emissions from wet-out area i, pounds of VOC per year, sent to a control device.

$WAEi_{co}$ = wet-out area VOC emissions from wet-out area i, pounds of VOC per year, at the outlet of a control device.

$WAEi_{u}$ = wet-out area VOC emissions from wet-out area i, pounds of VOC per year, not sent to a control device.

m = number of wet-out areas.

n = number of ovens.

(3) Add-on control device option.

Use the equation in paragraph (M)(1)(a) of this rule to calculate per cent reduction.

(4) Combination option.

Use the equations in paragraphs (M)(1)(a), (M)(1)(b), and (M)(2) of this rule, as applicable, to calculate per cent reduction.

(N) Calculation of a VOC emissions factor to demonstrate compliance for continuous lamination/casting operations.

(1) Compliant line option.

Use the following equation to calculate a VOC emissions factor in pounds of VOC per ton of neat resin plus and neat gel coat plus.

$$E = \frac{WAE_u + WAE_c + O_u + O_c}{(R + G)}$$

where:

E = VOC emissions factor in pounds of VOC per ton of neat resin plus and neat gel coat plus.

WAE_u = uncontrolled wet-out area VOC emissions, pounds of VOC per year.

WAE_c = controlled wet-out area VOC emissions, pounds of VOC per year.

O_u = uncontrolled oven VOC emissions, pounds of VOC per year.

Oc = controlled oven VOC emissions, pounds of VOC per year.

R = total usage of neat resin plus, tons per year.

G = total usage of neat gel coat plus, tons per year.

(2) Averaging option.

Use the following equation to demonstrate compliance.

$$E = \frac{\sum_{i=1}^{m} WAE_{ui} + \sum_{i=1}^{o} WAE_{ci} + \sum_{j=1}^{n} O_{uj} + \sum_{j=1}^{p} O_{cj}}{(R + G)}$$

where:

E = VOC emissions factor in pounds of VOC per ton of resin and gel coat.

WAE_{ui} = uncontrolled VOC emissions from wet-out area i, pounds of VOC per year.

WAE_{ci} = controlled VOC emissions from wet-out area i, pounds of VOC per year.

O_{uj} = uncontrolled VOC emissions from oven j, pounds of VOC per year.

O_{cj} = controlled VOC emissions from oven j, pounds of VOC per year.

i = number of wet-out areas.

j = number of ovens.

m = number of wet-out areas uncontrolled.

n = number of ovens uncontrolled.

o = number of wet-out areas controlled.

p = number of ovens controlled.

R = total usage of neat resin plus, tons per year.

G = total usage of neat gel coat plus, tons per year.

(3) Combination option.

Use the equations in paragraphs (N)(1) and (N)(2) of this rule, as applicable, to demonstrate compliance.

(O) Demonstration of continuous compliance and the associated monitoring and data collection requirements.

(1) Demonstration of continuous compliance.

(a) The owner or operator shall demonstrate continuous compliance with each VOC control requirement in paragraph (D) of this rule that applies to the affected operations according to the methods specified in paragraphs (O)(1)(a)(i) to (O)(1)(a)(iv) of this rule.

(i) Compliance with VOC emissions limits for affected operations using add-on control devices is demonstrated by following the procedures in 40 CFR Part 63, Subpart SS, which include the use of continuous parameter monitors. Affected operations using add-on control devices may also use continuous emissions monitors to demonstrate continuous compliance as an alternative to continuous parameter monitors.

(ii) Compliance with VOC emissions limits is demonstrated by maintaining a VOC emissions factor value less than or equal to the appropriate VOC emissions limit listed in table 2 or table 3 of this rule, on a twelve-month rolling average, and/or by including in each compliance report a statement that individual resins and gel coats, as applied, meet the appropriate VOC emissions limits, as discussed in paragraph (O)(2)(c) of this rule.

(iii) Compliance with monomer content limits in table 4 of this rule is demonstrated by maintaining an average monomer content value less than or equal to the appropriate monomer contents listed in table 4 of this rule, on a twelve-month rolling average, and/or by including in

each compliance report a statement that resins and gel coats individually meet the appropriate monomer content limits in table 4 of this rule, as discussed in paragraph (G)(4)(d) of this rule.

(iv) Compliance with the work practice standards in table 1 of this rule is demonstrated by performing the work practice required for the affected operation.

(b) The owner or operator shall report each deviation from each VOC control requirement in paragraph (D) of this rule that applies. The deviations shall be reported according to the requirements in paragraph (Q) of this rule.

(c) Except as provided in paragraph (O)(1)(d) of this rule, during periods of startup, shutdown or malfunction, the owner or operator shall meet the VOC emissions limits and work practice standards that apply.

(d) When an add-on control device is used to meet a VOC control requirement in paragraph (D) of this rule, the owner or operator is not required to meet that VOC control requirement during periods of startup, shutdown, or malfunction, but the owner or operator shall operate the affected operation to minimize emissions to the greatest extent which is consistent with safety and good air pollution control practice.

(e) Deviations that occur during a period of malfunction for those affected operations and standards specified in paragraph (O)(1)(d) of this rule are not violations if the owner or operator demonstrates to the director's satisfaction that the owner or operator was operating in accordance with paragraph (O)(1)(d) of this rule. The director will determine whether deviations that occur during a period of startup, shutdown, and malfunction are violations.

(2) Monitoring and data collection requirements to demonstrate continuous compliance.

(a) If using an add-on control device, the owner or operator shall during production collect and keep a record of data as indicated in 40 CFR Part 63, subpart SS and shall monitor and collect data as specified in paragraphs (O)(2)(a)(i) to (O)(2)(a)(iv) of this rule.

(i) Except for monitoring malfunctions, associated repairs, and required quality assurance or control activities (including, as applicable, calibration checks and required zero and span adjustments), the owner or operator shall conduct all monitoring in continuous operation (or collect data at all required intervals) at all times that the controlled operation is operating.

(ii) The owner or operator may not use data recorded during monitoring malfunctions, associated repairs, and required quality assurance or control activities for purposes of this rule, including data averages and

calculations, or fulfilling a minimum data availability requirement, if applicable. The owner or operator shall use all the data collected during all other periods in assessing the operation of the control device and associated control system.

(iii) At all times, the owner or operator shall maintain necessary parts for routine repairs of the monitoring equipment.

(iv) A monitoring malfunction is any sudden, infrequent, not reasonably preventable failure of the monitoring equipment to provide valid data. Monitoring failures that are caused in part by poor maintenance or careless operation are not malfunctions.

(b) For meeting any VOC emissions limits based on a VOC emissions limit specified in table 2 or table 3 of this rule, the owner or operator shall collect and keep records of resin and gel coat use, monomer content, and operation where the resin is used. If the owner or operator is averaging monomer contents to meet any monomer content limits specified in table 4 of this rule, the owner or operator shall collect and keep records of resin and gel coat use, monomer content, and operation where the resin is used. Resin use records may be based on purchase records if the owner or operator can reasonably estimate how the resin is applied. The monomer content records may be based on MSDS or on resin specifications supplied by the resin supplier.

(c) Resin and gel coat use records are not required for the individual resins and gel coats that are demonstrated, as applied, to meet their applicable emission limit as defined in paragraph (G)(1) of this rule. However, the owner or operator shall retain the records of resin and gel coat monomer content, and the owner or operator shall include the list of these resins and gel coats and identify their application methods in the semiannual compliance reports. If after the owner or operator has initially demonstrated that a specific combination of an individual resin or gel coat, application method, and controls meets an applicable emission limit, and the resin or gel coat changes or the monomer content increases, or the owner or operator changes the application method or controls, then the owner or operator again shall demonstrate that the individual resin or gel coat meets its emission limit as specified in paragraph (G)(1) of this rule. If any of the previously mentioned changes results in a situation where an individual resin or gel coat exceeds its applicable emission limit in table 2 or table 3 of this rule, the owner or operator shall begin collecting resin and gel coat use records and calculate compliance using one of the averaging options on a twelve-month rolling average.

(d) For each pultrusion machine, the owner or operator shall record all times that doors or covers of wet area enclosures are open and there is resin present in the resin bath.

(P) Recordkeeping requirements.

(1) The owner or operator shall keep the following records:

(a) A copy of each applicability notification and compliance status report submitted to comply with this rule, including all documentation supporting any applicability or compliance status.

(b) For any add-on control device, all records required in 40 CFR Part 63, subpart SS, to show continuous compliance with this rule.

(c) For operations listed in tables 2, 3, and 4 of this rule all data, assumptions, and calculations used to determine monomer contents and VOC emissions factors.

(d) For any continuous laminating/casting operation:

(i) All data, assumptions, and calculations used to determine monomer contents, VOC emissions factors, per cent reduction of VOC emissions, and/or pounds of VOC per ton as applicable;

(ii) A brief description of the rationale for the assignment of a VOC emissions equation or VOC emissions factor to each resin or gel coat formula;

(iii) When using facility-specific VOC emissions estimation equations or factors, all data, assumptions, and calculations used to derive the VOC emissions estimation equations and factors and identification and rationale for the worst-case resin or gel coat formula; and

(iv) For all VOC emissions estimation equations and VOC emissions factors, documentation that USEPA has approved them. This requirement does not apply to VOC emissions estimation equations and VOC emissions factors found in table 1 to Subpart WWWW of 40 CFR 63 or AP-42.

(e) A certified statement that operations are in compliance with the work practice standards specified in table 1 of this rule, as applicable.

(2) Regardless of any exclusion in paragraph (A)(2)(e) of this rule, the owner or operator of a SMC manufacturing machine shall keep the following records:

(a) Monthly production records of the following operational data for each SMC manufacturing machine:

(i) The amount of SMC produced for each type of SMC product.

(ii) The monomer content of each SMC product.

(b) Monthly VOC emissions records for each SMC manufacturing machine that show the VOC emissions factor used for each SMC product, including a citation of the source of the emission factor, and the results of the VOC emission calculations.

(3) For any uncontrolled SMC manufacturing machine exempted under paragraph (D)(9) of this rule, the owner or operator shall record the VOC emissions from that SMC manufacturing machine for the recent month and rolling twelve-month period within fifteen days after the end of each month. The owner or operator shall notify the appropriate Ohio environmental protection agency district office or local air agency of any record showing the SMC manufacturing machine exceeded the applicable VOC emissions limit. A copy of such record shall be sent to the appropriate Ohio environmental protection agency district office or local air agency within forty-five days after the exceedance occurs.

(4) All records specified under paragraphs (P)(1) to (P)(3) of this rule shall be retained by the owner or operator for a period of not less than five years following the date of each occurrence, measurement, maintenance, corrective action, report, or record and shall be made available to the director or any authorized representative of the director for review during normal business hours.

(Q) Reporting requirements.

(1) The owner or operator of a facility that has reinforced plastic composites production operations subject to this rule shall submit semiannual compliance status reports containing the information specified in paragraphs (Q)(3)(a) to (Q)(3)(h) of this rule. The semiannual compliance status reports shall be submitted no later than thirty calendar days after the end of each six-month period to the appropriate Ohio environmental protection agency district office or local air agency. The first compliance report shall cover the period beginning on the compliance date that is specified in paragraph (R) of this rule and ending on June thirtieth or December thirty-first, whichever date is the first date following the end of the first calendar half after the compliance date that is specified in paragraph (R) of this rule. Each subsequent compliance report shall cover the semiannual reporting period from January first through June thirtieth or the semiannual reporting period from July first through December thirty-first.

(2) For each facility that is subject to permitting requirements pursuant to Chapter 3745-77 of the Administrative Code (pertaining to Title V permits), the owner or operator may submit the first and subsequent semiannual compliance reports according to the dates established within the facility's Title V permit, instead of according to the dates specified in paragraph (Q)(1) of this rule.

(3) The compliance report shall contain the information specified in paragraphs (Q)(3)(a) to (Q)(3)(h) of this rule.

(a) Company name and address.

(b) Statement by a responsible official with that official's name, title, and signature, certifying the truth, accuracy, and completeness of the content of the report.

(c) Date of the report and beginning and ending dates of the reporting period.

(d) If there are no deviations from any VOC emissions limitations and operating limits that apply and there are no deviations from the work practice standards in table 1 of this rule, a statement that there were no deviations from VOC emissions limitations, operating limits, or work practice standards during the reporting period.

(e) If there were no periods during which a continuous monitoring system (CMS), including a continuous emissions monitoring system and a continuous parameter monitoring system, were out of control, a statement that there were no periods during which the CMS was out of control during the reporting period.

(f) For each deviation from a VOC emissions limitation or operating limit and for each deviation from a work practice standard that occurs at an affected operation where a CMS is not used to comply with the VOC emissions limitation, operating limit, or work practice standard in this rule, the compliance report shall contain the information in paragraphs (Q)(3)(f)(i) and (Q)(3)(f)(ii) of this rule.

(i) The total operating time of each affected operation during the reporting period.

(ii) Information on the number, duration, and cause of deviations (including unknown cause, if applicable), as applicable, and the corrective action taken.

(g) For each deviation from an VOC emissions limitation or operating limit that occurs at an affected operation where a CMS is used to comply with the VOC emissions limitation or operating limit in this rule, the compliance report shall include the information in paragraphs (Q)(3)(g)(i) to (Q)(3)(g)(xii) of this rule.

(i) The date and time that each malfunction started and stopped.

(ii) The date and time that each CMS was inoperative, except for zero (low-level) and high-level checks.

(iii) The date, time, and duration that each CMS was out of control, as defined in paragraph (c)(7) of 40 CFR 63.8, including the information in paragraph (c)(8) of 40 CFR 63.8.

(iv) The date and time that each deviation started and stopped, and whether each deviation occurred during a period of startup, shutdown, or malfunction, or during another period.

(v) A summary of the total duration of the deviation during the reporting period and the total duration as a per cent of the total source operating time during that reporting period.

(vi) A breakdown of the total duration of the deviations during the reporting period into those that are due to startup, shutdown, control equipment problems, process problems, other known causes, and other unknown causes.

(vii) A summary of the total duration of CMS downtime during the reporting period and the total duration of CMS downtime as a per cent of the total source operating time during that reporting period.

(viii) An identification of each VOC that was monitored at the affected source.

(ix) A brief description of the affected operations.

(x) A brief description of the CMS.

(xi) The date of the latest CMS certification or audit.

(xii) A description of any changes in CMS, processes, or controls since the last reporting period.

(h) Where multiple compliance options are available, the owner or operator shall state in this compliance report if the owner or operator has changed compliance options since the last compliance report.

(4) The owner or operator shall report if the facility exceeded the one hundred tons of VOC per year emissions threshold if that exceedance would make the facility subject to paragraph (D)(3) of this rule.

(5) Each facility that has obtained a Title V permit pursuant to Chapter 3745-77 of the Administrative Code shall report all deviations as described in this rule in the semiannual monitoring report required by the Title V permit. If the facility submits a semiannual compliance report pursuant to this rule along with, or as part of, the semiannual monitoring report required by the facility's Title V permit, and the semiannual compliance report includes all required information concerning deviations from any VOC emissions limitation, operating limit, or work practice standard in this rule, submission of the semiannual compliance report shall be deemed to satisfy any obligation to report the same deviations in the semiannual monitoring report. However, submission of a compliance report

shall not otherwise affect any obligation the affected source may have to report deviations from permit requirements to the appropriate Ohio environmental protection agency district office or local air agency.

(R) Compliance dates.

(1) Except where otherwise specified within this rule, any owner or operator of an affected operation that is subject to this rule shall comply with the requirements of this rule by no later than the following dates:

(a) For any affected operation for which installation commenced before December 14, 2009, the compliance date of the affected operation is the initial startup of the affected operation or the twelve months from December 14, 2009, whichever is later.

(b) For any affected operation for which installation commenced on or after December 14, 2009, the compliance date of the affected operation is the date of initial startup of the affected operation.

(2) If the reinforced plastic composites production facility has VOC emissions less than the threshold of one hundred tons of VOC per year from the combination of all open molding, centrifugal casting, continuous lamination/casting, pultrusion, SMC manufacturing, mixing, and BMC manufacturing, and the facility subsequently increases its VOC emissions to meet or exceed the threshold of one hundred tons of VOC per year from the combination of such operations, the compliance date of any affected operation pertaining to a new VOC emission requirement is two years from the date that the semiannual compliance report indicates the facility meets or exceeds the threshold of one hundred tons of VOC per year.

(3) In the event an uncontrolled SMC manufacturing machine is exempted under paragraph (D)(9) of this rule and is later equipped with a VOC emission control system, the compliance date of the SMC manufacturing machine pertaining to paragraph (D)(8) of this rule is the date of first startup of the installed VOC emission control system for the SMC manufacturing machine. Until the date of first startup of the installed VOC emission control system for the SMC manufacturing machine, the SMC manufacturing machine shall continue to comply with the requirement of paragraph (D)(9) of this rule.

(4) If an affected operation is vented to an add-on control to meet a VOC emissions requirement specified within the rule, the owner or operator shall demonstrate compliance by testing the operation and the add-on control device in accordance with the requirements of this rule within ninety days after the compliance date of the affected operation.

(5) Additional testing of an affected operation vented to an add-on control may be required by the director to ensure continued compliance.

(S) Requirements on applicability notification, permit application, and testing notification.

(1) The owner or operator of an affected operation, as described in paragraph (C) of this rule, that is subject to this rule and that has an initial startup date before December 14, 2009 shall notify the appropriate Ohio environmental protection agency district office or local air agency in writing that such operation is subject to this rule. The notification, which shall be submitted not later than sixty days after December 14, 2009, shall provide the following information:

(a) Name and address of the owner or operator;

(b) Address (i.e., physical location) of the facility;

(c) Equipment description and Ohio EPA application number (if assigned) of the affected operation;

(d) Identification of the applicable requirements, the means of compliance, and the compliance date for the affected operation under this rule; and

(e) Regarding a permit for the affected operation, whichever of the following is applicable:

(i) Submission of an application for an operating permit, a permit modification, or an operating permit renewal in accordance with rule 3745-31-02 of the Administrative Code; or

(ii) Submission of a statement of intent to submit an application for a Title V permit or modification of a Title V permit in accordance with rule 3745-77-02 or 3745-77-06 of the Administrative Code, respectively.

(2) The owner or operator of an affected operation, as described in paragraph (C) of this rule, that is subject to this rule and that has an initial startup date on or after December 14, 2009 shall notify the appropriate Ohio environmental protection agency district office or local air agency in writing that the affected operation is subject to this rule. The notification, which shall be submitted not later than either the date of initial startup of the affected operation or sixty days after December 14, 2009, whichever is later, shall provide the information listed under paragraph (F)(1) of this rule. The application for a permit to install under rule 3745-31-02 of the Administrative Code may be used to fulfill the notification requirements of this paragraph.

(3) For the compliance testing of an affected operation that is vented to an add-on control device to meet a VOC emissions requirement specified within this rule, the owner or operator shall submit an intent to test that is in accordance with the procedures of paragraph (A) of rule 3745-21-10 of the Administrative Code and that includes the test procedures specified within this rule.

-Table 1: Work practice standards. As required in paragraph (D)(1) of this rule, the owner or operator shall meet the work practice standards specified by type of operation in the following table:-

Type of operation	Work practice standards
1. Compression/injection molding	Uncover, unwrap or expose only one charge per mold cycle per compression/injection molding machine. For machines with multiple molds, one charge means sufficient material to fill all molds for one cycle. For machines with robotic loaders, no more than one charge may be exposed prior to the loader. For machines fed by hoppers, sufficient material may be uncovered to fill the hopper. Hoppers shall be closed when not adding materials. Materials may be uncovered to feed to slitting machines. Materials shall be recovered after slitting.
2. Cleaning operation (cleaning of equipment used in reinforced plastic composites manufacture)	Do not use cleaning solvents (cleaners) that have a VOC content greater than 0.42 pound VOC per gallon, except cleaners used in closed systems and used to clean cured resin from application equipment. Application equipment includes any equipment that directly contacts resin.
3. VOC-containing materials storage operation	Keep containers that store VOC-containing materials closed or covered except during the addition or removal of materials. Bulk VOC-containing materials storage tanks may be vented as necessary for safety.
4. SMC manufacturing operation	a. Close or cover the resin delivery system to the doctor box on each SMC manufacturing machine. The doctor box itself may be open.
	b. Use a nylon containing film to enclose SMC.
5. All mixing or BMC manufacturing operations[1]	a. Use mixer covers with no visible gaps present in the mixer covers, except that gaps of up to 1.0 inch are permissible around mixer shafts and any required instrumentation.
	b. Close any mixer vents when actual mixing is occurring, except that venting is allowed during addition of materials, or as necessary prior to adding materials or opening the cover for safety. Vents routed

	to a ninety-five per cent efficient control device are exempt from this requirement.
	c. Keep the mixer covers closed while actual mixing is occurring except when adding materials or changing covers to the mixing vessels.
6. Pultrusion operation manufacturing parts that meet the following criteria: one thousand or more reinforcements or the glass equivalent of one thousand ends of one hundred thirteen yield roving or more; and have a cross-sectional area of sixty square inches or more that is not subject to the ninety-five per cent VOC emissions reduction requirement	a. Do not allow vents from the building ventilation system, or local or portable fans to blow directly on or across the wet-out area(s).
	b. Do not permit point suction of ambient air in the wet-out area(s) unless that air is directed to a control device.
	c. Use devices such as deflectors, baffles, and curtains when practical to reduce air flow velocity across the wet-out area(s).
	d. Direct any compressed air exhausts away from resin and wet-out area(s).
	e. Convey resin collected from drip-off pans or other devices to reservoirs, tanks, or sumps via covered troughs, pipes, or other covered conveyance that shields the resin from the ambient air.
	f. Cover all reservoirs, tanks, sumps, or VOC-containing materials storage vessels except when they are being charged or filled.
	g. Cover or shield from ambient air resin delivery systems to the wet-out area(s) from reservoirs, tanks, or sumps where practical.

[1]Containers of five gallons or less may be open when active mixing is taking place, or during periods when they are in process (i.e., they are actively being used to apply resin). For polymer casting mixing operations, containers with a surface area of five hundred square inches or less may be open while active mixing is taking place.

-Table 2: VOC Emissions limits for specific open molding, centrifugal casting, pultrusion and continuous lamination/casting operations at facilities with VOC emissions less than the threshold of one hundred tons of VOC per year. As required in paragraph (D)(2) of this rule, the owner or operator shall meet the VOC emissions limits specified by type of operation and resin application method or gel coat type in the following table:-

Type of operation	Resin application method or gel coat type	VOC emissions limit[1]
1. Open molding: corrosion-resistant and/or high strength (CR/HS)	a. Mechanical resin application	113 lb/ton
	b. Filament application	171 lb/ton
	c. Manual resin application	123 lb/ton
2. Open molding: non-CR/HS	a. Mechanical resin application	88 lb/ton
	b. Filament application	188 lb/ton
	c. Manual resin application	87 lb/ton
3. Open molding: tooling	a. Mechanical resin application	254 lb/ton
	b. Manual resin application	157 lb/ton
4. Open molding: low-flame spread/low-smoke products	a. Mechanical resin application	497 lb/ton
	b. Filament application	270 lb/ton
	c. Manual resin application	238 lb/ton
5. Open molding: shrinkage controlled resins[2]	a. Mechanical resin application	354 lb/ton
	b. Filament application	215 lb/ton
	c. Manual resin application	180 lb/ton
6. Open molding: gel coat[3]	a. Tooling gel coat	440 lb/ton
	b. White/off white pigmented gel coat	267 lb/ton
	c. All other pigmented gel coat	377 lb/ton
	d. CR/HS or high performance gel coat	605 lb/ton
	e. Fire retardant gel coat	854 lb/ton
	f. Clear production gel coat	522 lb/ton
7. Centrifugal casting: CR/HS	a. Resin application with the mold closed, and the mold is vented during spinning and cure	25 lb/ton[4]
	b. Resin application with the mold closed, and the mold is not vented during spinning and cure	Not applicable (this is considered to be a closed molding operation)
	c. Resin application with the mold open, and the mold is vented during spinning and cure	25 lb/ton[4]
	d. Resin application with the	Use the

	mold open, and the mold is not vented during spinning and cure	appropriate open molding emission limit[5]
8. Centrifugal casting: non-CR/HS	a. Resin application with the mold closed, and the mold is vented during spinning and cure	20 lb/ton[4]
	b. Resin application with the mold closed, and mold is not vented during the spinning and cure	Not applicable (this is considered to be a closed molding operation)
	c. Resin application with the mold open, and the mold is vented during spinning and cure	20 lb/ton[4]
	d. Resin application with the mold open, and the mold is not vented during spinning and cure	Use the appropriate open molding emission limit[5]
9. Pultrusion[6]	Not applicable	Reduce total VOC emissions by at least sixty per cent by weight
10. Continuous lamination/casting	Not applicable	Reduce total VOC emissions by at least 58.5 per cent by weight or not exceed a VOC emissions limit of 15.7 pounds of VOC per ton of neat resin plus and neat gel coat plus

[1]VOC emissions limits for open molding and centrifugal casting are expressed as pounds of VOC per ton of resin or gel coat (pounds per ton). The operation shall be at or below these values based on a twelve-month rolling average.

[2]This emission limit applies regardless of whether the shrinkage controlled resin is used as a production resin or a tooling resin.

[3]If applying gel coat with manual application, for compliance purposes treat the gel coat as if it were applied using atomized spray guns to determine both emission limits and emission factors. If using multiple application methods and any portion of a specific gel coat is applied using nonatomized spray, the owner or operator may use the nonatomized spray gel coat equation to calculate an emission factor for the manually applied portion of that gel coat. Otherwise, use the atomized spray gel coat application equation to calculate emission factors.

[4]For compliance purposes, calculate the VOC emission factor using only the appropriate centrifugal casting equation in item 2 of table 1 to 40 CFR 63 Subpart WWWW, or a site-specific emission factor for after the mold is closed as discussed in paragraph (E)(1) of this rule.

[5]Calculate your emission factor using the appropriate open molding covered cure emission factor in item 1 of table 1 to 40 CFR Part 63, Subpart WWWW, or a site-specific emission factor as discussed in paragraph (E)(1) of this rule.

[6]Pultrusion machines that produce parts that meet the following criteria: one thousand or more reinforcements or the glass equivalent of one thousand ends of one hundred thirteen yield roving or more; and have a cross sectional area of sixty square inches or more are not subject to this requirement. Their requirement is the work practice of air flow management which is described in table 1 of this rule.

-Table 3: Alternative VOC emissions limits for open molding, centrifugal casting, and continuous lamination/casting operations at facilities with VOC emissions equal to or greater than the threshold of one hundred tons of VOC per year. As provided in paragraph (D)(3) of this rule, as an alternative to the ninety-five per cent VOC emissions reductions requirement, the owner or operator may meet the appropriate VOC emissions limits specified by type of operation and resin application method, gel coat type, or vent system type in the following table:-

Type of operation	Resin application method	VOC emissions limit[1]
1. Open molding: corrosion-resistant and/or high strength (CR/HS)	a. Mechanical resin application	6 lb/ton
	b. Filament application	9 lb/ton
	c. Manual resin application	7 lb/ton
2. Open molding: non-CR/HS	a. Mechanical resin application	13 lb/ton
	b. Filament application	10 lb/ton
	c. Manual resin application	5 lb/ton
3. Open molding: tooling	a. Mechanical resin application	13 lb/ton
	b. Manual resin application	8 lb/ton
4. Open molding: low flame	a. Mechanical resin	25 lb/ton

spread/low smoke products	application	
	b. Filament application	14 lb/ton
	c. Manual resin application	12 lb/ton
5. Open molding: shrinkage controlled resins	a. Mechanical resin application	18 lb/ton
	b. Filament application	11 lb/ton
	c. Manual resin application	9 lb/ton
6. Open molding: gel coat: Open molding: gel coat[2]	a. Tooling gel coat	22 lb/ton
	b. White/off white pigmented gel coat	22 lb/ton
	c. All other pigmented gel coat	19 lb/ton
	d. CR/HS or high performance gel coat	31 lb/ton
	e. Fire retardant gel coat	43 lb/ton
	f. Clear production gel coat	27 lb/ton
7. Centrifugal casting: CR/HS[3,4]	a. Uses a vent system that moves heated air through the mold	27 lb/ton
	b. Uses a vent system that moves ambient air through the mold	2 lb/ton
8. Centrifugal casting: non-CR/HS[3,4]	a. Uses a vent system that moves heated air through the mold	21 lb/ton
	b. Uses a vent system that moves ambient air through the mold	1 lb/ton
9. Continuous lamination/casting	Not applicable	1.47 lb/ton

[1]For open molding and centrifugal casting operations, the VOC emissions limits are expressed as pounds of VOC per ton of resin or gel coat used (pound per ton). For a continuous lamination/casting operation, the VOC emissions limit is expressed as pounds of VOC per ton of neat resin plus and neat gel coat plus used. The operations shall be at or below these values based on a twelve-month rolling average.

[2]These limits are for spray application of gel coat. Manual gel coat application shall be included as part of spray gel coat application for compliance purposes using the same VOC emissions factor equation and VOC emissions limit. If only gel coat is applied with

manual application, treat the manually applied gel coat as if it were applied with atomized spray for compliance determinations.

[3]Centrifugal casting operations where the mold is not vented during spinning and cure are considered to be closed molding and are not subject to any emissions limit. Centrifugal casting operations where the mold is not vented during spinning and cure, and the resin is applied to the open centrifugal casting mold using mechanical or manual open molding resin application techniques are considered to be open molding operations and the appropriate open molding emission limits apply.

[4]Centrifugal casting operations where the mold is vented during spinning and the resin is applied to the open centrifugal casting mold using mechanical or manual open molding resin application techniques, are to use the appropriate centrifugal casting emission limit to determine compliance. Calculate the emission factor using the appropriate centrifugal casting emission factor in table 1 to Subpart WWWW of 40 CFR 63, or a site-specific emissions factor as discussed in paragraph (E)(1) of this rule.

-Table 4: Options allowing use of the same resin across different operations that use the same resin type. As provided in paragraph (G)(4) of this rule, when electing to use the same resin(s) for multiple resin application methods, the owner or operator may use any resin(s) with a monomer content less than or equal to the values shown in the following table, or any combination of resins whose weighted average monomer content based on a twelve-month rolling average is less than or equal to the values shown in the following table:-

Type of operation	Resin application method	Monomer content limit (per cent by weight of resin)
1. CR/HS resins, centrifugal casting[1,2]	a. CR/HS mechanical[3]	48.0
	b. CR/HS filament application	48.0
	c. CR/HS manual	48.0
2. CR/HS resins, nonatomized mechanical	a. CR/HS filament application	46.4
	b. CR/HS manual	46.4
3. CR/HS resins, filament application	CR/HS manual	42.0
4. Non-CR/HS resins, filament application	a. Non-CR/HS mechanical[3]	45.0
	b. Non-CR/HS manual	45.0
	c. Non-CR/HS centrifugal casting[1,2]	45.0
5. Non-CR/HS resins, nonatomized mechanical	a. Non-CR/HS manual	38.5

	b. Non-CR/HS centrifugal casting[1,2]	38.5
6. Non-CR/HS resins, centrifugal casting[1,2]	Non-CR/HS manual	37.5
7. Tooling resins, nonatomized mechanical	Tooling manual	91.4
8. Tooling resins, manual	Tooling atomized mechanical	45.9

[1]If the centrifugal casting operation blows heated air through the molds, then ninety-five per cent capture and control shall be used if the owner or operator wishes to use this compliance option.

[2]If the centrifugal casting molds are not vented, the owner or operator may treat the centrifugal casting operations as if they were vented if the owner or operator wishes to use this compliance option.

[3]Nonatomized mechanical application shall be used.

Effective: 11/11/2010

R.C. 119.032 review dates: 04/02/2014

CERTIFIED ELECTRONICALLY
Certification

11/01/2010
Date

Promulgated Under: 119.03
Statutory Authority: 3704.03(E)
Rule Amplifies: 3704.03(A), 3704.03(E)
Prior Effective Dates: 12/14/09

3745-21-27 **Boat manufacturing.**

[Comment: For dates and availability of non-regulatory government publications, publications of recognized organizations and associations, federal rules, and federal statutory provisions referenced in this rule, see paragraph (JJ) of rule 3745-21-01 of the Administrative Code titled to "Reference to materials."]

(A) Applicability.

(1) Except as provided in paragraph (B) of this rule, the requirements of paragraphs (C) to (L) of this rule shall apply to the following boat manufacturing operations at any boat manufacturing facility that meets all of the criteria under paragraph (A)(2) of this rule:

(a) Open molding resin and gel coat operations (these include pigmented gel coat, clear gel coat, production resin, tooling gel coat, and tooling resin);

(b) Resin and gel coat mixing operations; and

(c) Resin and gel coat application equipment cleaning operations.

The owner or operator of a boat manufacturing facility that manufactures solely fiberglass parts of boats such as hatches, seats, lockers, or boat trailers is not considered a boat manufacturing facility for the purpose of this rule.

(2) The boat manufacturing operations:

(a) Are located at a boat manufacturing facility where the total actual VOC emissions from all boat manufacturing operations identified in paragraph (A)(1) of this rule (including, but not limited to emissions from the manufacture of hatches, seats, lockers, trailers or cleanup materials) are equal to or greater than 2.7 tons per rolling twelve-month period, before the application of control system and devices; and

(b) Are located at a boat manufacturing facility in Ashtabula, Cuyahoga, Geauga, Lake, Lorain, Medina, Portage, or Summit county.

(B) Exemptions.

The following operations and/or materials are exempt from the monomer and nonmonomer VOC requirements of paragraphs (B) and (D) of this rule:

(1) Production resins (including skin coat resins) that must meet specifications for use in military vessels or must be approved by the United States coast guard for use in the construction of lifeboats, rescue boats, and other life-saving appliances approved under 46 CFR Subchapter Q or the construction of small passenger vessels regulated by 46 CFR Subchapter T. Production resins for

which this exemption is used must be applied with a nonatomized resin application method.

(2) Pigmented, clear, and tooling gel coat used for part or mold repair and touch-up. The total gel coat materials included in this exemption must not exceed 1.0 per cent by weight of all gel coat used at the facility on a twelve-month rolling basis.

(3) Pure, one hundred per cent vinylester resin used for skin coats. This exemption does not apply to blends of vinylester and polyester resins used for skin coats. Resins for which this exemption is used must be applied with a nonatomized application method. The total resin materials included in the exemption cannot exceed 5.0 per cent by weight of all resin used at the facility on a twelve-month rolling basis.

(4) Any closed molding operation that meets the specific definition of closed molding as defined in paragraph (HH) of rule 3745-21-01 of the Administrative Code. Open molding resin and gel coat operations that precede a closed molding operation are not exempt. Examples of these operations include gel coat or skin coat layers that are applied before lamination is performed by closed molding.

Any owner or operator of a facility claiming an exemption pursuant to this subparagraph shall record and maintain records, as applicable, in accordance with paragraph (M)(2) of this rule.

(C) Definitions.

The definitions applicable to this rule are contained in paragraphs (A), (B), and (HH) of rule 3745-21-01 of the Administrative Code.

(D) Molding resin and gel coat operation standards.

(1) The owner or operator of a boat manufacturing facility shall limit monomer VOC emissions from the five operations listed below to the monomer VOC limitation specified in paragraph (D)(3) of this rule.

(a) Production resin.

(b) Pigmented gel coat.

(c) Clear gel coat.

(d) Tooling resin.

(e) Tooling gel coat.

(2) Non-monomer VOC content.

The owner or operator of a boat manufacturing facility shall not apply any resin or gel coat that exceeds a non-monomer content of 5.0 per cent, by weight, of resin or gel coat.

(3) Monomer VOC emission limitation.

(a) The owner or operator of a boat manufacturing facility shall limit monomer VOC emissions from open molding resin and gel coat operations to the limitation specified by the following equation, based on a twelve-month rolling average.

Monomer VOC limit = $[92(M_R) + 318(M_{PG}) + 582(M_{CG}) + 108(M_{TR}) + 428(M_{TG})]$

Where:

Monomer VOC limit = total allowable monomer VOC that can be emitted from the molding operations included in the average, pounds per twelve-month period.

M_R = mass of production resin used in the past twelve months, excluding any materials that are exempt pursuant to paragraph (B) of this rule, in tons.

M_{PG} = mass of pigmented gel coat used in the past twelve months, excluding any materials that are exempt pursuant to paragraph (B) of this rule, in tons.

M_{CG} = mass of clear gel coat used in the past twelve months, excluding any materials that are exempt pursuant to paragraph (B) of this rule, in tons.

M_{TR} = mass of tooling resin used in the past twelve months, excluding any materials that are exempt pursuant to paragraph (B) of this rule, in tons.

M_{TG} = mass of tooling gel coat used in the past twelve months, excluding any materials that are exempt pursuant to paragraph (B) of this rule, in tons.

The numerical coefficients associated with each term on the right hand side of the equation are the allowable monomer VOC emission rate for that particular material in units of pounds per ton of material used.

(b) The owner or operator of a boat manufacturing facility using a filled production resin or filled tooling resin shall limit monomer VOC emissions from molding operations to the following limits:

(i) If the filled resin is used as a production resin; less than or equal to 92.0 pounds of monomer VOC per ton of filled resin applied.

(ii) If the filled resin is used as a tooling resin; less than or equal to 108.0 pounds of monomer VOC per ton of filled resin applied.

(E) Cleaning material standards.

(1) The VOC content of cleaning solvents employed for routine application equipment cleaning shall contain a maximum of 5.0 per cent VOC, by weight, or have a composite partial vapor pressure of no more than 0.50 mmHg at sixty-eight degrees Fahrenheit.

(2) Only non-VOC solvents shall be used to remove cured resin and gel coat from application equipment.

(F) Application technique standards.

(1) Production resins exempt pursuant to paragraph (B)(1) of this rule must be applied with a nonatomized application method.

(2) Pure one hundred per cent vinylester used for skin coats exempt pursuant to paragraph (B)(3) of this rule must be applied with a nonatomized application method.

(G) Work practice standards.

All resin and gel coat mixing containers with a capacity equal to or greater than 55.0 gallons, including those used for on-site mixing of putties and polyputties, have a cover with no visible gaps in place at all times. This work practice standard does not apply when material is being manually added to or removed from a container, or when mixing or pumping equipment is being placed in or removed from a container.

(H) Compliance procedures and test methods.

(1) Non-monomer VOC content requirement of paragraph (D)(2) of this rule.

Compliance with the non-monomer VOC content (weight per cent) for resin and gel coat materials shall be determined by using test methods and procedures specified in paragraph (B) of rule 3745-21-10 of the Administrative Code.

(2) The monomer VOC emission limitation requirement of paragraph (D)(3) of this rule.

Compliance with the monomer VOC emission limitation for resin and gel coat operations shall be determined using one of the following options:

(a) Compliant material option.

(i) The owner or operator shall demonstrate compliance by using resins and gel coats that meet the monomer VOC content requirements in table 1.

-Table 1 Alternative VOC content requirements for molding resin and gel coat operations-

Operation	Application Method	Weighted-Average Monomer VOC Content (weight per cent)
Production resin	Atomized	28.0
Production resin	Nonatomized	35.0
Pigmented gel coat	Any method	33.0
Clear gel coat	Any method	48.0
Tooling resin	Atomized	30.0
Tooling resin	Nonatomized	39.0
Tooling gel coat	Any method	40.0

(ii) The monomer VOC content (weight per cent) shall be determined by using SCAQMD method 312-91. As an alternative, manufacture's formulation data may be used to demonstrate compliance. If there is a discrepancy between the manufacture's formulation data and the results of a subsequent test, test method results will be the determining factor unless the owner or operator can demonstrate to the director that the manufacturer's formulation data are correct.

(iii) Compliance using the VOC content requirements listed in table 1 of this rule is based on a twelve-month rolling average that is calculated at the end of every month. The first twelve-month rolling-average period begins on the compliance date specified in paragraph (K)(1) of this rule. If the owner or operator is using filled material (production resin or tooling resin), the owner or operator shall comply according to the procedure described in paragraph (H)(3) of this rule.

(iv) At the end of the twelfth month after the facility's compliance date and at the end of every subsequent month, the owner or operator shall review the VOC contents of the resins and gel coats used in the past twelve months in each operation. If all resins and gel coats used in an operation have VOC contents no greater than the applicable VOC content limitations in table 1 of this rule, then the owner or operator is in compliance with the emission limitation specified in paragraph (D)(3) of this rule for that twelve-month period for that operation. In addition, the owner or operator does not need to complete the weighted-average VOC content calculation contained in paragraph (H)(2)(a)(v) of this rule for that operation.

(v) In the event the owner or operator does not demonstrate compliance under paragraph (H)(2)(a)(iv) of this rule, at the end of every month, the owner or operator shall use the following equation to calculate the weighted average VOC content for all resins and gel coats used in each operation in the past twelve months.

$$Weighted\ Average\ VOC\ Content\ (\%) = \frac{\sum_{i=1}^{n}(M_i\ VOC_i)}{\sum_{i=1}^{n}(M_i)}$$

Where:

M_i = mass of molding resin or gel coat "i" used in the past twelve months in an operation, tons.

VOC_i = Monomer VOC content, by weight percent, of molding resin or gel coat "i" used in the past twelve months in an operation.

n = number of different molding resins or gel coats used in the past twelve months in an operation.

If the weighted-average VOC content for all materials of a certain type and specific application method does not exceed the applicable VOC content limitation specified in table 1 of this rule, then the owner or operator is in compliance with the emission limitation specified in paragraph (D)(3) of this rule.

(b) Emissions averaging option.

(i) Compliance using the emissions averaging option is demonstrated on a twelve-month rolling-average basis and is determined at the end of every month (twelve times per year). The first twelve-month rolling-average period begins on the compliance date specified in paragraph (K)(1) of this rule.

(ii) At the end of the twelfth month after the facility's compliance date and at the end of every subsequent month, use the following equation to demonstrate that the VOC emissions from those operations included in the average do not exceed the emission limitation in paragraph (D)(3) of this rule calculated for the same twelve-month period. (Include terms in the equation specified in paragraph (D)(3) of this rule and the following equation for only those operations and materials included in the average.)

Monomer VOC emissions = $(PV_R)(M_R) + (PV_{PG})(M_{PG}) + (PV_{CG})(M_{CG}) + (PV_{TR})(M_{TR}) + (PV_{TG})(M_{TG})$

Where:

Monomer VOC emissions = Monomer VOC emissions calculated using the monomer VOC emission equations for each operation included in the average, in pounds.

PV_R = Weighted-average monomer VOC emission rate for production resin used in the past twelve months, in pounds per ton.

M_R = Mass of production resin used in the past twelve months, in tons.

PV_{PG} = Weighted-average monomer VOC emission rate for pigmented gel coat used in the past twelve months, in pounds per ton.

M_{PG} = Mass of pigmented gel coat used in the past twelve months, in tons.

PV_{CG} = Weighted-average monomer VOC emission rate for clear gel coat used in the past twelve months, in pounds per ton.

M_{CG} = Mass of clear gel coat used in the past twelve months, in pounds.

PV_{TR} = Weighted-average monomer VOC emission rate for tooling resin used in the past twelve months, in pounds per ton.

M_{TR} = Mass of tooling resin used in the past twelve months, in tons.

PV_{TG} = Weighted-average monomer VOC emission rate for tooling gel coat used in the past twelve months, in pounds per ton.

M_{TG} = Mass of tooling gel coat used in the past twelve months, in tons.

(iii) At the end of every month, use the following equation to compute the weighted-average monomer VOC emission rate for each molding resin and gel coat operation included in the average.

$$PV_{op} = \frac{\sum_{i=1}^{n} M_i PV_i}{\sum_{i=1}^{n} M_i}$$

Where:

PV_{OP} = weighted-average monomer VOC emission rate for each molding operation (PV_R, PV_{PG}, PV_{CG}, PV_{TR}, and PV_{TG}) included in the average, pounds of monomer VOC per ton of material applied.

M_i = mass of resin or gel coat "i" used within an operation in the past twelve months, in tons.

n = number of different molding resins and gel coats used within an operation in the past twelve months.

PV_i = the monomer VOC emission rate for resin or gel coat "i" used within an operation in the past twelve months, pounds of monomer VOC per tons of material applied. PV_i shall equal PV_F as calculated under paragraph (H)(3) of this rule when using filled resins.

(iv) The owner or operator shall use the equations in table 2 to calculate the monomer VOC emission rate (PV_i) for each resin and gel coat used in each operation in the past twelve months.

-Table 2 Monomer VOC emission rate formulas for molding operations.-

Operation	Application Method	Formula to calculate the monomer VOC emission rate.
Production resin, tooling resin	Atomized	0.014 x (Resin VOC per cent)$^{2.425}$
	Atomized, plus vacuum bagging with roll-out	0.01185 x (Resin VOC per cent)$^{2.425}$
	Atomized, plus vacuum bagging without roll-out	0.00945 x (Resin VOC per cent)$^{2.425}$
	Nonatomized	0.014 x (Resin VOC per cent)$^{2.275}$
	Nonatomized, plus vacuum bagging with roll-out	0.0110 x (Resin VOC per cent)$^{2.275}$
	Nonatomized, plus vacuum bagging without roll-out	0.0076 x (Resin VOC per cent)$^{2.275}$
Pigmented gel coat, clear gel coat, tooling gel coat	All methods	0.445 x (Gel coat VOC per cent)$^{1.675}$

Equations in table 2 calculate the monomer VOC emission rate value in kilograms of VOC per megagrams of resin or gel coat applied. To convert the monomer VOC emission rate to pounds per ton multiply the product of the equation by two. The equations for vacuum bagging with roll-out are applicable when a facility rolls out the applied resin and fabric prior to applying the vacuum bagging materials. The equations for vacuum bagging without roll-out are applicable when a facility applies the vacuum bagging materials immediately after resin application without rolling out the resin and fabric. VOC per cent equals VOC content as supplied, expressed as a weight-per cent value between zero and one hundred per cent.

(v) If the monomer VOC emissions, as calculated in paragraph (H)(2)(b)(ii) of this rule, are less than the monomer VOC emission limitation calculated in the equation specified in paragraph (D)(3)(a) of this rule for the same twelve-month period, then the facility is in compliance with the emission limitation calculated in paragraph (D)(3)(a) of this rule for those operations and materials included in the average.

(vi) Those operations and materials not included in this emissions average option must demonstrate compliance using an option in paragraph (H)(2)(a) or (H)(2)(c) of this rule.

(c) Add-on control option.

(i) The owner or operator shall demonstrate compliance by employing an add-on control device with a minimum overall control efficiency that will meet the monomer VOC emission limitations specified in paragraph (D)(3) of this rule.

(ii) Compliance shall be determined by performing emissions tests in accordance with the following:

(a) The general provisions specified under paragraphs (A)(2) to (A)(5) of rule 3745-21-10 of the Administrative Code shall apply to the compliance testing.

(b) The test methods and procedures of paragraph (C) of rule 3745-21-10 of the Administrative Code shall be followed.

(c) When calculating the monomer VOC emission limitation in paragraph (D)(3) of this rule, the owner or operator shall use the mass of each material used during the control device performance test (in lieu of the mass of each material used over the past twelve months) to determine the emission limit that is applicable during the test. If the measured emissions at the outlet of the control device are less than the emission limit, then the facility will be considered to have achieved compliance with the emission limit.

(3) The monomer VOC emission limitation (for filled resins) requirement of paragraph (D)(3)(b) of this rule.

(a) If the owner or operator is using a filled production resin or filled tooling resin, compliance shall be demonstrated for the filled material on an as-applied basis using the following equation:

$$PV_F = PV_U \, x \, \frac{(100 - Per\ cent\ filler)}{100}$$

Where:

PV_F = The as-applied monomer VOC emission rate for a filled production resin or tooling resin, pounds of monomer VOC per ton of filled material.

PVu = The monomer VOC emission rate for the neat (unfilled) resin, before filler is added, as calculated using the formulas in the table 2 of this rule.

Per cent filler = The weight-per cent of filler in the as-applied filled resin system.

(b) If the owner or operator is including a filled resin in the emissions averaging procedure described in paragraph (H)(2)(b) of this rule, then the owner or operator shall use the value of PV_F calculated using the equation above for the value of PV_i in equation specified in paragraph (H)(2)(b)(iii) of this rule.

(4) The cleaning material requirements of paragraph (E) of this rule.

(a) Compliance with the VOC content requirement shall be determined by using the procedures outlined in USEPA method 24.

(b) Compliance with the vapor pressure requirement shall be determined by the following procedures:

(i) Determining the identity and quantity of each compound in a blended organic solvent by using ASTM D2306-00, or by using ASTM E260-96 for organics and ASTM D3792-05 for water content, if applicable, or the manufacturer's product formulation data; and

(ii) Determining the vapor pressure of each pure VOC component by using ASTM D2879-97 or from publications such as "Perry's Chemical Engineer's Handbook, CRC Handbook of Chemistry and Physics, or Lange's Handbook of Chemistry"; and

(iii) Calculating the composite partial pressure of the solvent by using the formula for composite partial pressure. For the purpose of this calculation, the blended solvent shall be assumed to be an ideal solution where Raoult's Law applies. The partial pressures of each compound at twenty degrees Celsius (sixty-eight degrees Fahrenheit) shall be used in the formula.

The VOC composite partial vapor pressure is calculated as follows:

$$PP_c = \sum_{i=1}^{n} \frac{(W_i)(VP_i)/MW_i}{\frac{W_w}{MW_w} + \frac{W_e}{MW_e} + \sum_{i=1}^{n} \frac{W_i}{MW_i}}$$

Where:

W_i = Weight of the "i"th VOC compound, in grams.

W_w = Weight of water, in grams.

W_e = Weight of exempt compound, in grams.

MW_i = Molecular weight of the "i"th VOC compound, in grams per gram-mole.

(iv) MW_w = Molecular weight of water, in grams per gram-mole.

(v) MW_e = Molecular weight of the "e"th exempt compound, in grams per gram-mole.

(vi) PP_c = VOC composite partial pressure at twenty degrees Celsius (sixty-eight degrees Fahrenheit), in mmHg.

(vii) VP_i = Vapor pressure of the "i"th VOC compound at twenty degrees Celsius (sixty-eight degrees Fahrenheit), in mmHg.

(I) Monitoring and record keeping requirements.

(1) The owner or operator of a boat manufacturing facility that is subject to the provisions of this rule shall collect and record the following information for each operation subject to this rule on a monthly basis and shall maintain the information at the facility for a period of five years:

(a) The total amounts, in pounds, of atomized molding production resin, nonatomized production resin, pigmented gel coat, clear gel coat, atomized tooling resin, nonatomized tooling resin, and tooling gel coat used per month and the weighted-average VOC contents for each operation, expressed as weight per cent.

(b) All calculations performed pursuant to paragraph (H) of this rule.

(c) The VOC content of each non-monomer resin and gel coat employed.

(d) For each cleaning material employed for routine application equipment cleaning, either the VOC content, by weight per cent or the composite vapor pressure, in mmHg; whichever is the applicable requirement selected to comply with the cleaning solvent requirements of paragraph (E) of this rule.

(e) Calculations performed to establish the monomer VOC emission limitation as specified in paragraph (D)(3)(a) of this rule.

(2) If an owner or operator of a boat manufacturing facility that employs add-on control equipment pursuant to paragraph (H)(2)(c) of this rule consisting of a thermal incinerator or catalytic incinerator to achieve and maintain compliance, the owner or operator shall comply with the following requirements:

(a) Continuous temperature monitoring and continuous temperature recording equipment shall be installed and operated to accurately measure the operating temperature(s) for the control device.

(b) The following information shall be collected and recorded for each day of operation of the control device, and the information shall be maintained at the facility for a period of five years:

(i) A log or record of the operating time for the control device, monitoring equipment, and the associated boat manufacturing operation.

(ii) For thermal incinerators, all three-hour periods of operation during which the average combustion temperature was more than fifty degrees Fahrenheit below the average combustion temperature during the most recent emission test that demonstrated that the boat manufacturing facility was in compliance.

(iii) For catalytic incinerators, all three-hour periods of operation during which the average temperature of the dryer exhaust gases immediately before the catalyst bed was more than fifty degrees Fahrenheit below the average temperature of the dryer exhaust gases during the most recent emission test that demonstrated that the boat manufacturing facility was in compliance, and all three-hour periods during which the average temperature difference across the catalyst bed was less than eighty per cent of the average temperature difference during the most recent emission test that demonstrated that the boat manufacturing facility was in compliance.

(3) If an owner or operator of a boat manufacturing facility operates add-on control equipment pursuant to paragraph (H)(2)(c) of this rule consisting of a carbon adsorption system to achieve and maintain compliance, the owner or operator shall comply with the following requirements:

(a) One of the following types of monitoring and recording equipment shall be installed and operated for the carbon adsorption system:

(i) A continuous emission monitoring and recording system that is capable of accurately measuring and recording the concentration of organic compounds in the exhaust gases from the carbon adsorption system.

(ii) Monitoring and recording equipment that are capable of accurately measuring and recording the total mass steam flow rate for each regeneration cycle of each carbon bed.

(iii) Monitoring and recording equipment that are capable of accurately measuring and recording the temperature of each carbon bed after regeneration (and after completion of any cooling cycle(s)).

(b) The following information shall be collected and recorded for each day of operation of the carbon adsorption system, and the information shall be maintained at the facility for a period of five years:

(i) A log or record of the operating time for the carbon adsorption system, monitoring equipment, and the associated boat manufacturing operation.

(ii) For a carbon adsorption system that employs a continuous emission monitoring and recording system to measure and record the concentration of organic compounds in the exhaust gases, all three-hour periods of operation during which the average concentration level or reading in the exhaust gases is more than twenty per cent greater than the exhaust gas organic compound concentration level or reading measured by the most recent performance test that demonstrated that the boat manufacturing facility was in compliance.

(iii) For a carbon adsorption system that employs monitoring and recording equipment to measure and record the total mass steam flow rate for each regeneration cycle of each carbon bed, all carbon bed regeneration cycles during which the total mass steam flow rate was more than ten per cent below the total mass steam flow rate during the most recent performance test that demonstrated that the boat manufacturing facility was in compliance.

(iv) For a carbon adsorption system that employs monitoring and recording equipment to measure and record the temperature of each carbon bed after regeneration (and after completion of any cooling cycle(s)), all carbon bed regeneration cycles during which the temperature of the carbon bed after regeneration (and after completion of any cooling cycle(s)) was more than ten per cent greater than the carbon bed temperature during the most recent performance test that demonstrated that the boat manufacturing facility was in compliance.

(J) Reporting requirements.

(1) Any owner or operator of a boat manufacturing facility that is subject to the provisions of this rule shall notify the director of any record maintained in accordance with paragraph (I)(1) of this rule showing the use of noncomplying materials. A copy of such record shall be sent to the director within thirty days following the end of the month in which the use of noncomplying materials occurs.

(2) Any owner or operator of a boat manufacturing facility that employs control equipment pursuant to paragraph (H)(2)(c) of this rule shall submit to the director quarterly summaries of the records required by paragraphs (I)(2)(b) and (I)(3)(b) of this rule. These quarterly reports shall be submitted no later than

April thirtieth, July thirty-first, October thirty-first, and January thirty-first, and shall cover the records for the previous calendar quarters.

(K) Compliance dates.

(1) The owner or operator of a facility that is subject to this rule shall comply with the requirements of this rule no later than the following dates:

(a) For any subject boat manufacturing facility for which installation commenced before the effective date of this rule, the compliance date for the boat manufacturing facility is either twelve months after the effective date of this rule or the date of initial startup of the boat manufacturing facility, whichever is later.

(b) For any subject boat manufacturing facility for which installation commenced on or after the effective date of this rule, the compliance date for the boat manufacturing facility is the initial startup date of the boat manufacturing facility.

(2) If an owner or operator of a boat manufacturing facility that is subject to this rule and employs add-on control equipment to comply with this rule, pursuant to paragraph (H)(2)(c) of this rule, the owner or operator shall demonstrate compliance with paragraph (H)(2)(c) of this rule by testing the VOC emission control equipment in accordance with paragraph (H)(2)(c)(ii) of this rule according to the following:

(a) For any owner or operator of a facility subject to paragraph (K)(1)(a) of this rule, by no later than ninety days after the operation's compliance date. In addition, the Ohio environmental protection agency may accept the results of an emission test conducted prior to the effective date of this rule, if the owner or operator provides information and data to the Ohio environmental protection agency which demonstrate that the test was witnessed by the Ohio environmental protection agency or its delegated agent, that an approved USEPA emission test method was employed, and that the operation of the operation(s) was consistent with the current operating conditions and operating capacity.

(b) For any owner or operator of a facility subject to paragraph (K)(1)(b) of this rule, within one hundred eighty days after the facility's compliance date.

(3) Additional testing of the VOC emission control equipment for a boat manufacturing facility in accordance with paragraph (H)(2)(c) of this rule may be required by the director to ensure continued compliance.

(L) Requirements on applicability notification, compliance certification, and permit application.

(1) The owner or operator of a boat manufacturing facility that is subject to this rule with an initial startup date before the effective date of this rule shall notify the Ohio environmental protection agency district office or local air agency in writing that the boat manufacturing facility is subject to this rule. The notification, which shall be submitted not later than sixty days after the effective date of this rule (or within sixty days after the boat manufacturing facility becomes subject to this rule), shall provide the following information:

(a) Name and address of the owner or operator.

(b) Address (i.e., physical location) of the affected facility.

(c) Description of the boat manufacturing facility and Ohio environmental protection agency emissions unit number, if assigned.

(d) Identification of the VOC emission requirement, the means of compliance and the compliance date for the boat manufacturing facility.

(e) Submission of an application for an operating permit or an application for a modification to an operating permit in accordance with Chapter 3745-77 of the Administrative Code (for sources subject to the Title V permit program) or in accordance with Chapter 3745-31 of the Administrative Code (for sources not subject to the Title V permit program) for each subject process:

(i) That does not possess an effective operating permit, or

(ii) That does posses an effective operating permit and the owner or operate cannot certify in writing to the director that such subject operation is in compliance with all requirements of this rule. An application for an operating permit is not required provided the subject process is operating under an effective permit and certifies compliance. Such certification shall include all compliance certification requirements under paragraph (L)(3) of this rule.

(2) The owner or operator of a boat manufacturing facility that is subject to this rule with an initial startup date on or after the effective date of this rule shall notify the Ohio environmental protection agency district office or local air agency in writing that the boat manufacturing facility is subject to this rule. The notification, which shall be submitted not later than either the date of initial startup of the boat manufacturing facility or sixty days after the effective date of this rule, whichever is later, and shall provide the information listed under paragraph (L)(1) of this rule. The application for an installation permit under rule 3745-31-02 of the Administrative Code may be used to fulfill the notification requirements of this paragraph.

(3) Compliance certification.

(a) The owner or operator of a fiberglass boat manufacturing facility that is subject to this rule shall notify the Ohio environmental protection agency district office or local air agency in writing within thirty days following the completion of any of the following requirements:

(i) For a boat manufacturing facility subject to the VOC emission requirements in paragraph (D) of this rule, the first documented achievement of compliance with the requirements; or

(ii) For a boat manufacturing facility subject to the add-on control requirement in paragraph (H)(2)(c) of this rule:

(a) The completion of installation and initial use of the add-on control system;

(b) The completion of installation and initial use of any monitoring devices required under paragraph (I) of this rule; and

(c) The completion of any compliance testing conducted in accordance with paragraph (K)(2) of this rule to demonstrate compliance with the applicable control requirement.

(b) The compliance certification under paragraph (L)(3)(a) of this rule shall provide the following, where applicable:

(i) A description of the requirements.

(ii) A description of the VOC emission control system.

(iii) A description of the monitoring devices.

(iv) A description of the records that document continuing compliance.

(v) The results of any compliance tests, including documentation of test data.

(vi) The results of any records that document continuing compliance, including calculations.

(vii) A statement by the owner or operator of the affected facility as to whether the boat manufacturing facility has complied with the requirement(s).

(M) Requirements for an owner or operator of a boat manufacturing facility that determines they are not subject to one of the following requirements:

(1) The owner or operator of a boat manufacturing facility that determines the total actual VOC emissions, before the application of control systems and devices,

from all boat manufacturing operations are not equal to or greater than the limitation specified in paragraph (A)(2)(a) of this rule, shall select one of the following methods and maintain the following records for a period of five years:

(a) Monthly recordkeeping method.

(i) Total pounds of all resins and gel coats used per calendar month;

(ii) Total gallons of all cleanup materials used per calendar month;

(iii) VOC content of each resin, gel coat, and cleanup material used per calendar month;

(iv) The total VOC emissions before the application of control systems and devices, in pounds for all resins, gel coats, and cleanup material employed per calendar month; and

(v) The rolling twelve-month summation of VOC emissions, in tons, before the application of control systems and devices. The rolling twelve-month summation shall be calculated as the total VOC emissions for the current calendar month, plus the total VOC emissions from the previous eleven calendar months.

(b) Daily emissions method.

Provided total VOC emissions are less than 15.0 pounds per day, the owner or operator may elect to maintain the following records in lieu of the records required under paragraph (M)(1)(a) of this rule:

(i) Total pounds of all resins and gel coats used per day;

(ii) Total gallons of all cleanup materials used per day;

(iii) VOC content of each resin, gel coat, and cleanup material used per day; and

(iv) The total VOC emissions before the application of control systems and devices, in pounds for all resins, gel coats, and cleanup material employed per day.

(2) The owner or operator of a boat manufacturing facility that determines the boat manufacturing operations are not subject to the monomer and non-monomer VOC requirements of paragraph (D) of this rule shall maintain the following records for a period of five years, as applicable:

(a) For a production resin employed meeting the exemption requirements specified in paragraph (B)(1) of this rule, the owner or operator shall keep a record of the resins which are being used for this exemption.

(b) For a pigmented, clear, and tooling gel coat employed meeting the exemption requirements specified in paragraph (B)(2) of this rule, the amount of each of these types of coats employed and copies of calculations showing that the exempt amount does not exceed 1.0 per cent of all gel coat used.

(c) For a pure one hundred per cent vinylester used for skin coats meeting the exemption requirements specified in paragraph (B)(3) of this rule, the amount of one hundred per cent vinylester skin coat employed and copies of calculations showing that the exempt amount does not exceed 5.0 per cent of all resin used.

Effective: 05/12/2011

R.C. 119.032 review dates: 08/25/2013

CERTIFIED ELECTRONICALLY
Certification

05/02/2011
Date

Promulgated Under: 119.03
Statutory Authority: 3704.03(E)
Rule Amplifies: 3704.03(A), 3704.03(E)

3745-21-28 **Miscellaneous industrial adhesives and sealants.**

[Comment: For dates and availability of non-regulatory government publications, publications of recognized organizations and associations, federal rules, and federal statutory provisions referenced in this rule, see paragraph (JJ) of rule 3745-21-01 of the Administrative Code titled "Reference to materials."]

(A) Applicability.

(1) Except as provided in paragraph (A)(2) of this rule, the requirements of paragraphs (B) to (G) of this rule shall apply to each miscellaneous industrial adhesive and sealant application process where:

(a) The total actual VOC emissions from all miscellaneous industrial adhesive and sealant application processes (including emissions from surface preparation and cleanup activities) at the facility are equal to or greater than 3.0 tons per twelve-month rolling period before the application of control systems and devices; and

(b) The miscellaneous industrial adhesive and sealant application process is located at a facility in Ashtabula, Cuyahoga, Geauga, Lake, Lorain, Medina, Portage, or Summit county.

(2) The requirements of paragraphs (C)(1), (D) and (E) of this rule shall not apply to the following:

(a) Adhesives, sealants, adhesive primers or sealant primers being tested or evaluated in any research and development, quality assurance or analytical laboratory;

(b) Adhesives, sealants, adhesive primers or sealant primers used in the assembly, repair and manufacture of aerospace or undersea-based weapon systems;

(c) Adhesives, sealants, adhesive primers or sealant primers used in the manufacturing of medical equipment;

(d) Aerosol adhesive and aerosol adhesive primer application processes;

(e) Cyanoacrylate adhesives;

(f) Processes using adhesives, sealants, adhesive primers or sealant primers that are supplied by the manufacturer in containers with a net volume of sixteen fluid ounces or less, or a net weight of one pound or less. Any owner or operator of a facility claiming exemption pursuant to this subparagraph shall record and maintain records in accordance with paragraph (H)(2) of this rule;

(g) Processes using polyester bonding putties to assemble fiberglass parts at fiberglass boat manufacturing facilities and at other reinforced plastic composite manufacturing facilities; and

(h) Digital printing operations.

(3) The requirements of paragraphs (B) to (H) of this rule shall not apply to miscellaneous industrial adhesive and sealant application processes for which the owner or operator is required to comply with the following rules:

(a) Rule 3745-21-19 of the Administrative Code for aerospace.

(b) Paragraph (I)(4) of rule 3745-21-09 of the Administrative Code for metal furniture.

(c) Paragraph (K)(6) of rule 3745-21-09 of the Administrative Code for large appliances.

(d) Rule 3745-21-24 of the Administrative Code for flatwood paneling.

(e) Paragraph (F)(2) of rule 3745-21-21-09 of the Administrative Code for paper, film, and foil.

(f) Rule 3745-21-22 of the Administrative Code for offset lithographic printing and letterpress printing facilities.

(g) Paragraph (Y)(4) of rule 3745-21-09 of the Administrative Code for flexographic, packaging rotogravure and publication rotogravure printing lines.

(h) Paragraph (E) of rule 3745-21-09 of the Administrative Code for coil coatings.

(i) Paragraph (G) of rule 3745-21-09 of the Administrative Code for fabric coatings.

(j) Paragraph (X) of rule 3745-21-09 of the Administrative Code for rubber tire manufacturing.

(B) The definitions applicable to this rule are contained in paragraphs (A), (B), and (II) of rule 3745-21-01 of the Administrative Code.

(C) VOC limitation standards.

(1) The VOC content limitations in table 1 for adhesives, sealants, adhesive primers or sealant primers applied to particular substrates shall apply as follows:

(a) If an owner or operator uses an adhesive, sealant, adhesive primer or sealant primer subject to a specific VOC content limit in table 1 of this rule, such specific limitation is applicable rather than an adhesive-to-substrate limitation as presented in table 1 of this rule;

(b) If an adhesive is used to bond dissimilar substrates together, the applicable substrate category with the highest VOC content shall be the limitation for such use; and

(c) All adhesives, sealants, adhesive primers or sealant primers shall be applied using one of the following application methods: electrostatic spray, HVLP spray, flow coat, roll coat, dip coat (including electrodeposition), airless spray, or air-assisted airless spray. An equivalent coating application method capable of achieving similar transfer efficiencies to HVLP may be approved by the director on a case-by-case basis.

-Table 1 - VOC content limitations for adhesives, adhesive primers, sealants and sealant primers.-

Adhesive, sealant, adhesive primer or sealant primer category	VOC content limitation (pounds per gallon)
ABS welding	3.3
Ceramic tile installation	1.1
Computer diskette jacket manufacturing	7.1
Contact bond	2.1
Cove base installation	1.3
CPVC welding	4.1
Indoor floor covering installation	1.3
Metal to urethane/rubber molding or casting	7.1
Motor vehicle adhesive	2.1
Motor vehicle weatherstrip adhesive	6.3
Multipurpose construction	1.7
Non-membrane roof installation/repair	2.6
Other plastic cement welding	4.3
Outdoor floor covering installation	2.1
PVC welding	4.3
Single-ply roof membrane installation/repair	2.1
Structural glazing	0.8
Thin metal laminating	6.5
Tire retread	0.8
Perimeter bonded sheet vinyl flooring installation	5.5
Waterproof resorcinol glue	1.4
Sheet-applied rubber installation	7.1
Sealants:	

Architectural	2.1
Marine deck	6.4
Non-membrane roof installation/repair	2.6
Roadway	2.1
Single-ply roof membrane	3.8
Other	3.6
Adhesive primers:	
Automotive glass	7.5
Plastic cement welding	5.4
Single-ply roof membrane	2.1
Traffic marking tape	1.3
Other	2.1
Sealant primers:	
Non-porous architectural	2.1
Porous architectural	6.5
Marine deck	6.4
Other	6.3
Adhesives applied to the listed substrate (Adhesive-to-substrate limitations):	
Flexible vinyl	2.1
Fiberglass	1.7
Metal	0.3
Porous material (except wood)	1.0
Wood	0.3
Rubber	2.1
Other substrates	2.1

(2) An owner or operator of each miscellaneous industrial adhesive and sealant application process using an adhesive, sealant, adhesive primer or sealant primer subject to paragraph (C)(1) of this rule may use add-on air pollution control equipment, in lieu of complying with the VOC content limitations of table 1, if such equipment meets the following requirements:

(a) The VOC emissions from the use of all adhesives, sealants, adhesive primers or sealant primers subject to this rule are reduced by an overall capture and control efficiency of at least eighty-five per cent, by weight;

(b) The combustion temperature is monitored continuously if a thermal incinerator is operated;

(c) Inlet and exhaust gas temperatures are monitored continuously if a catalytic incinerator is operated;

(d) Control device efficiency is monitored continuously if a carbon absorber or control device other than a thermal or catalytic incinerator is operated; and

(e) Operation records sufficient to demonstrate compliance with the requirements of this subdivision are maintained as required by paragraph (D) of this rule.

(3) Any owner or operator of a miscellaneous industrial adhesive and sealant application process using adhesives, sealants, adhesive primers, sealant primers, surface preparation solvents or cleanup solvents subject to this rule shall:

(a) Store all VOC-containing adhesives, adhesive primers, and process-related waste materials in closed containers;

(b) Store all VOC-containing cleaning materials and used shop towels in closed containers;

(c) Ensure that mixing and storage containers used for VOC-containing cleaning materials, adhesives, adhesive primers, and process-related waste materials are kept closed at all times except when depositing or removing these materials;

(d) Minimize spills of VOC-containing cleaning materials, adhesives, adhesive primers, and process-related waste materials;

(e) Convey VOC-containing cleaning materials, adhesives, adhesive primers, and process-related waste materials from one location to another in closed containers or pipes; and

(f) Minimize VOC emission from cleaning of application, storage, mixing, and conveying equipment by ensuring that equipment cleaning is performed without atomizing the cleaning solvent and all spent solvent is captured in closed containers.

(D) Recordkeeping and reporting.

(1) The owner or operator of each miscellaneous industrial adhesive and sealant application process subject to this rule shall maintain records demonstrating compliance with this rule, including, but not limited to, the following information:

(a) A list of each adhesive, sealant, adhesive primer, and sealant primer in use and in storage;

(b) A data sheet or material list which provides the material name, manufacturer identification, and material application;

(c) Catalysts, reducers or other components used and the mix ratio;

(d) The VOC content of each product as supplied;

(e) The final VOC content as applied; and

(f) The monthly volume of each adhesive, sealant, adhesive primer, and sealant primer used.

(2) Any owner or operator of a miscellaneous industrial adhesive and sealant application process who complies with paragraph (C)(2) of this rule in lieu of paragraph (C)(1) of this rule through the use of add-on air pollution control equipment shall record the key operating parameters for the control equipment, including but not limited to, the following information:

(a) On a daily basis, the combustion temperature, inlet and exhaust gas temperatures and control device efficiency, as appropriate, pursuant to paragraph (C)(2) of this rule;

(b) Daily hours of operation; and

(c) All maintenance performed including the date and type of maintenance.

(3) All records made to determine compliance with this rule shall be maintained for five years from the date such record is created and shall be made available to the director or the director's designee within ninety days of a request.

(E) Compliance procedures and test methods.

(1) Except as provided in paragraphs (E)(3) to (E)(4) of this rule, the VOC and solids content of all non-aerosol adhesives, and adhesive primers shall be determined using USEPA method 24, as identified in 40 CFR 60, Appendix A.

(2) The organic content of exempt organic compounds shall be determined using ASTM D4457-02, as applicable.

(3) The VOC content of any plastic cement welding adhesive or primer shall be determined using SCAQMD method 316A.

(4) To determine if a diluent is a reactive diluent, the percent of the reactive organic compound that becomes an integral part of the finished materials shall be determined using SCAQMD method 316A.

(5) For adhesives that do not contain reactive diluents, pounds of VOC per gallon of adhesive, less water and exempt compounds, shall be calculated according to the following equation:

$$\text{Pounds of VOC per gallon of adhesive} = \frac{Ws - Ww - We}{Vm - Vw - Ve}$$

Where:

Ws = weight of volatile compounds, in pounds.

Ww = weight of water, in pounds.

We = weight of exempt compounds, in pounds.

Vm = volume of material, in gallons.

Vw = volume of water, in gallons.

Ve = volume of exempt compounds, in gallons.

(6) For adhesives that contain reactive diluents, the VOC content of the adhesive is determined after curing. The pounds of VOC per gallon of adhesive, less water and exempt compounds, shall be calculated according to the following equation:

$$\text{Pounds of VOC per gallon of adhesive} = \frac{Wrs - Wrw - Wre}{Vrm - Vrw - Vre}$$

Where:

Wrs = weight of volatile compounds not consumed during curing, in pounds.

Wrw = weight of water not consumed during curing, in pounds.

Wre = weight of exempt compounds not consumed during curing, in pounds.

Vrm = volume of material not consumed during curing, in gallons.

Vrw = volume of water not consumed during curing, in gallons.

Vre = volume of exempt compounds not consumed during curing, in gallons.

(7) Pounds of VOC per gallon of material shall be calculated according to the following equation:

$$\text{Pounds of VOC per gallon of material} = \frac{Ws - Ww - We}{Vm}$$

Where:

Ws = weight of volatile compounds, in pounds.

Ww = weight of water, in pounds.

We = weight of exempt compounds, in pounds.

Vm = volume of material, in gallons.

(8) Per cent VOC by weight shall be calculated according to the following equation:

$$\% \text{ VOC by weight} = [(Wv / W)] \times 100$$

Where:

Wv = weight of VOCs in pounds.

W = weight of material in pounds.

(9) If add-on air pollution control equipment is used to meet the requirements of this rule, the following emissions testing shall be applicable:

(a) The general provisions specified under paragraphs (A)(2) to (A)(5) of rule 3745-21-10 of the Administrative Code shall apply to compliance testing; and

(b) The test methods and procedures of paragraph (C) of rule 3745-21-10 of the Administrative Code shall be followed.

For the purpose of demonstrating compliance with the emission control requirements of paragraph (C)(2) of this rule, the affected source shall be run at typical operating conditions and flow rates compatible with scheduled production during any emission testing.

(F) Compliance dates.

(1) The owner or operator of a miscellaneous industrial adhesive and sealant application process subject to this rule shall comply with the requirements of this rule no later than the following dates:

(a) For any subject miscellaneous industrial adhesive and sealant application process for which installation commenced before the effective date of this rule, the compliance date for the process is either twelve months after the effective date of this rule or the date of initial startup of the process, whichever is later.

(b) For any subject miscellaneous industrial adhesive and sealant application process for which installation commenced on or after the effective date of this rule, the compliance date for the process is the initial startup date of the process.

(2) The owner or operator of a miscellaneous industrial adhesive and sealant application process that is subject to this rule shall demonstrate compliance with

paragraph (C)(2) of this rule by testing the control device on each subject source in accordance with paragraph (E)(9) of this rule according to the following:

(a) For any owner or operator of a miscellaneous industrial adhesive and sealant application process subject to paragraph (F)(1)(a) of this rule, by no later than ninety days after the process's compliance date. In addition, the Ohio environmental protection agency may accept the results of an emission test conducted prior to the effective date of this rule, if the owner or operator provides information and data to the Ohio environmental protection agency which demonstrate that the test was witnessed by the Ohio environmental protection agency or its delegated agent, that an approved USEPA emission test method was employed, and that the operation of the process was consistent with the current operating conditions and operating capacity.

(b) For any owner or operator of a miscellaneous industrial adhesive and sealant application process subject to paragraph (F)(1)(b) of this rule, within one hundred eighty days after the miscellaneous industrial adhesive and sealant application process's compliance date.

(3) Additional testing of a subject miscellaneous industrial adhesive and sealant application process and its VOC add-on air pollution control equipment in accordance with paragraph (E)(9) of this rule may be required by the director to ensure continued compliance.

(G) Requirements on applicability notification, compliance certification, and permit application.

(1) The owner or operator of a miscellaneous industrial adhesive and sealant application process that is subject to this rule with an initial startup date before the effective date of this rule shall notify the Ohio environmental protection agency district office or local air agency in writing that the process is subject to this rule. The notification, which shall be submitted not later than sixty days after the effective date of this rule (or within sixty days after the process becomes subject to this rule), shall provide the following information:

(a) Name and address of the owner or operator;

(b) Address (i.e., physical location) of the facility;

(c) Equipment description and Ohio EPA application number (if assigned) of the subject process;

(d) Identification of the VOC emission requirement, the means of compliance, and the compliance date for the subject process;

(e) Submission of an application for an operating permit or an application for a modification to an operating permit in accordance with Chapter 3745-77 of the Administrative Code (for sources subject to the Title V permit program)

or in accordance with Chapter 3745-31 of the Administrative Code (for sources not subject to the Title V permit program) for each subject process:

(i) That does not possess an effective operating permit, or

(ii) That does possess an effective operating permit and the owner or operate cannot certify in writing to the director that such subject process is in compliance with all requirements of this rule. An application for an operating permit is not required provided the subject process is operating under an effective permit and certifies compliance. Such certification shall include all compliance certification requirements under paragraph (G)(3) of this rule.

(2) The owner or operator of a miscellaneous industrial adhesive and sealant application process that is subject to this rule with an initial startup date on or after the effective date of this rule shall notify the Ohio environmental protection agency district office or local air agency in writing that the process is subject to this rule. The notification, which shall be submitted not later than either the date of initial startup of the subject process, or sixty days after the effective date of this rule (whichever is later), shall provide the information listed under paragraph (G)(1) of this rule. The application for an installation permit under rule 3745-31-02 of the Administrative Code may be used to fulfill the notification requirements of this paragraph.

(3) Compliance certification.

(a) The owner or operator of a miscellaneous industrial adhesive and sealant application process that is subject to this rule shall notify the Ohio environmental protection agency district office or local air agency in writing within thirty days following the completion of any of the following requirements:

(i) For a process subject to the VOC emission requirements in paragraphs (C)(1) and (C)(3) of this rule, the first documented achievement of compliance with each of the requirements;

(ii) For a process subject to the VOC add-on air pollution control equipment in paragraph (C)(2) of this rule:

(a) The completion of installation and initial use of a VOC emission control system for subject process;

(b) The completion of installation and initial use of any monitoring devices required under paragraph (C)(2) of this rule for the subject process; and

(c) The completion of any compliance testing conducted in accordance with paragraph (F)(2) of this rule to demonstrate compliance with the applicable control requirements.

(b) The compliance certification under paragraph (G)(3)(a) of this rule shall provide the following, where applicable:

(i) A description of the requirements;

(ii) A description of the VOC emission control system;

(iii) A description of the monitoring devices;

(iv) A description of the records that document continuing compliance;

(v) The results of any compliance tests, including documentation of test data;

(vi) The results of any records that document continuing compliance, including calculations; and

(vii) A statement by the owner or operator of the facility as to whether the subject process has complied with the requirement(s).

(H) Requirements for an owner or operator of a miscellaneous industrial adhesive and sealant application process that determines they are not subject to one or more of the following requirements:

(1) The owner or operator of a miscellaneous industrial adhesive and sealant application process that determines the total actual VOC emissions, before the application of air pollution control systems, from all miscellaneous industrial adhesive application processes (including emissions from surface preparation and cleanup activities) at the facility are not equal to or greater than the limitation specified in paragraph (A)(1)(a) of this rule, and, therefore, the facility is not subject to the requirements in paragraphs (B) to (G) of this rule, shall select one of the following methods and maintain the following records for a period of five years:

(a) Monthly recordkeeping method.

(i) Total pounds or gallons of each adhesive, sealant, adhesive primer, sealant primer, cleanup solvent and surface preparation solvent used per calendar month;

(ii) VOC content (per cent by weight and pounds per gallon) of each adhesive, sealant, adhesive primer, sealant primer, cleanup solvent and surface preparation solvent used per calendar month;

(iii) The total monthly VOC emissions, before the application of capture systems and control devices, in pounds for all adhesives, sealant, adhesive primer, sealant primer, cleanup solvent and surface preparation solvent employed per calendar month; and

(iv) The rolling twelve-month summation of VOC emissions, in tons, before the application of control systems and devices. The rolling twelve-month summation shall be calculated as the total VOC emissions for the current calendar month, plus the total VOC emissions from the previous eleven calendar months.

(b) Daily emissions method.

Provided total VOC emissions are less than 15.0 pounds per day, the owner or operator may elect to maintain the following records in lieu of the records required under paragraph (H)(1)(a) of this rule:

(i) Total pounds or gallons of each adhesive, sealant, adhesive primer, sealant primer, cleanup solvent and surface preparation solvent used per day;

(ii) VOC content (per cent by weight and pounds per gallon) of each adhesive, sealant, adhesive primer, sealant primer, cleanup solvent and surface preparation solvent used per day; and

(iii) The total daily VOC emissions, before the application of capture systems and control devices, in pounds for all adhesives, sealant, adhesive primer, sealant primer, cleanup solvent and surface preparation solvent employed per day.

(2) The owner or operator of a miscellaneous industrial adhesive application process that determines the process is not subject to paragraphs (C)(1), (D) and (E) of this rule because the use of all adhesives, sealants, adhesive primers or sealant primers in all processes are supplied by the manufacturer in containers with a net volume of sixteen fluid ounces or less, or a net weight of one pound or less, in accordance with paragraph (A)(2)(f) of this rule, shall maintain records for a period of five years identifying that all supplied containers of said materials meet the exemption.

Effective: 05/12/2011

R.C. 119.032 review dates: 08/25/2013

CERTIFIED ELECTRONICALLY
Certification

05/02/2011
Date

Promulgated Under: 119.03
Statutory Authority: 3704.03(E)
Rule Amplifies: 3704.03(A), 3704.03(E)

3745-21-29 **Control of volatile organic compound emissions from automobile and light-duty truck assembly coating operations, heavier vehicle assembly coating operations, and cleaning operations associated with these coating operations.**

[Comment: For dates and availability of non-regulatory government publications, publications of recognized organizations and associations, federal rules, and federal statutory provisions referenced in this rule, see paragraph (JJ) of rule 3745-21-01 of the Administrative Code titled "Reference to materials."]

(A) Applicability.

(1) Except as otherwise provided in paragraph (A)(3) of this rule, the requirements of paragraphs (B) to (I) of this rule shall apply to the following operations at an automobile and light-duty truck assembly facility, at a facility that performs these operations on a contractual basis, or at a heavier vehicle assembly facility that meets the criteria under paragraph (A)(2) of this rule:

(a) All primary coatings applied to:

(i) New automobile or new light-duty truck bodies;

(ii) Body parts for new automobiles or new light-duty trucks; and

(iii) Other parts that are coated along with these bodies or body parts.

(b) Additional coatings applied during the vehicle assembly process. Additional coatings include glass bonding primer, adhesives, cavity wax, sealer, deadener, gasket/gasket sealing material, underbody coating, trunk interior coating, bedliner, weatherstrip adhesive and lubricating waxes/compounds; and

(c) The coating of bodies and/or body parts for new heavier vehicles at an automobile and light-duty truck assembly facility or a heavier vehicle assembly facility that meet the applicability requirements of rule 3745-21-26 of the Administrative Code; however, the owner or operator elects to comply with the requirements of this rule in lieu of the requirements of rule 3745-21-26 of the Administrative Code.

(2) The coating operation:

(a) Is located at a facility where the total actual VOC emissions from all automobile and light-duty truck assembly coating operations identified in paragraph (A)(1) of this rule, including related cleaning operations, are equal to or greater than 3.0 tons per rolling twelve-month period, before the application of control systems and devices; and

(b) Is located at a facility in Ashtabula, Cuyahoga, Geauga, Lake, Lorain, Medina, Portage, or Summit county.

(3) Exemptions.

(a) The requirements of paragraphs (B) to (I) this rule shall not apply to any plastic or composites molding facility where all of the body parts topcoated at this facility for use in new automobiles, new light-duty trucks, or new heavier vehicles were fabricated (molded, stamped, formed, etc.) at this facility or at another plastic or composites molding facility which is jointly owned or operated with this facility, and none of the new vehicles in which these body parts are used are assembled at this facility; and the facility does not topcoat all of the body parts for any single new automobile, new light-duty truck, or heavier vehicle.

(b) The following coatings are excluded from the emission limitations specified in paragraph (C) of this rule:

(i) Aerosol coatings;

(ii) Coatings supplied in containers with a net volume of sixteen ounces or less, or a net weight of one pound or less; and

(iii) Coatings that meet the following low usage restrictions at the facility:

(a) Annual total usage of each separate coating formulation does not exceed fifty gallons; and

(b) Combined annual total usage of such coating formulations does not exceed two hundred gallons.

(B) Definitions.

The definitions applicable to this rule are contained in paragraphs (A), (B), and (D) of rule 3745-21-01 of the Administrative Code.

(C) Surface coating emission limitations.

No owner or operator of facility subject to this rule may cause, allow or permit the discharge into the ambient air of any VOC in excess of the following limitations.

(1) For primary coatings:

(a) For EDP primer coating operations:

(i) When the solids turnover ratio is 0.16 or greater; 0.70 pound of VOC per gallon of solids.

(ii) When the solids turnover ratio is greater than or equal to 0.040 and less than 0.160; $0.70 \times 350^{(0.160-RT)}$ pounds of VOC per gallon of solids.

(iii) When the solids turnover ratio is less than 0.040, there is no emission limitation.

(b) For primer coating operations that are neither EDP primer nor primer-surfacer, 1.9 pounds of VOC per gallon of coating, excluding water and exempt solvents, or, if a control system is employed, 2.6 pounds of VOC per gallon of solids.

(c) For primer-surfacer coating operations, 12.0 pounds of VOC per gallon of deposited solids. This emissions limitation is a daily volume-weighted average of the entire primer-surfacer coating operations (i.e., all spray booths, flash-off areas and bake ovens where primer-surfacer coatings are applied, dried, and cured, except those spray booths, flash-off areas and bake ovens in the final repair coating operations).

(d) For topcoat coating operations, 12.0 pounds of VOC per gallon of deposited solids. This emissions limitation is a daily volume-weighted average of the entire topcoat coating operations (i.e., all spray booths, flash-off areas and bake ovens where topcoat coatings are applied, dried, and cured, except those spray booths, flash-off areas and bake ovens in the final repair coating operations).

(e) For combined primer-surfacer and topcoat coating operations, 12.0 pounds of VOC per gallon of deposited solids. This emissions limitation is a daily volume-weighted average of the entire combined primer-surfacer and topcoat coating operations (i.e., all spray booths, flash-off areas and bake ovens where primer-surfacer coatings and topcoat coatings are applied, dried, and cured, except those spray booths, flash-off areas and bake ovens in the final repair coating operations).

[Comment: This is an alternative emission limitation in place of the emission limitations separately applicable to primer-surfacer coating operations and topcoat coating operations at the facility.]

(f) For final repair coating operations, 4.8 pounds of VOC per gallon of coating, excluding water and exempt solvents, or, if a control system is employed, 13.8 pounds of VOC per gallon of solids.

(2) For additional coatings:

(a) Automobile and light-duty truck glass bonding primer, 7.5 pounds VOC per gallon excluding water and exempt compounds.

(b) Automobile and light-duty truck adhesive, 2.1 pounds VOC per gallon excluding water and exempt compounds.

(c) Automobile and light-duty truck cavity wax, 5.4 pounds VOC per gallon excluding water and exempt compounds.

(d) Automobile and light-duty truck sealer, 5.4 pounds VOC per gallon excluding water and exempt compounds.

(e) Automobile and light-duty truck deadener, 5.4 pounds VOC per gallon excluding water and exempt compounds.

(f) Automobile and light-duty truck gasket/gasket sealing material, 1.7 pounds VOC per gallon excluding water and exempt compounds.

(g) Automobile and light-duty truck underbody coating, 5.4 pounds VOC per gallon excluding water and exempt compounds.

(h) Automobile and light-duty truck trunk interior coating, 5.4 pounds VOC per gallon excluding water and exempt compounds.

(i) Automobile and light-duty truck bedliner, 1.7 pounds VOC per gallon excluding water and exempt compounds.

(j) Automobile and light-duty truck weatherstrip adhesive, 6.3 pounds VOC per gallon excluding water and exempt compounds.

(k) Automobile and light-duty truck lubricating wax/compound, 5.8 pounds VOC per gallon excluding water and exempt compounds.

(D) An owner or operator may achieve compliance with the limitations in paragraph (C) of this rule by using add-on air pollution control equipment. Such add-on air pollution control equipment must meet the requirements of paragraph (F)(7) of this rule.

(E) Work practices for coating-related activities and cleaning materials.

Any owner or operator of coating operations for which emission limitations are specified under paragraph (C) of this rule shall:

(1) Store all VOC-containing coatings, thinners, and coating-related waste materials in closed containers;

(2) Ensure that mixing and storage containers used for VOC-containing coatings, thinners, and coating-related waste materials are kept closed at all times except when depositing or removing these materials;

(3) Minimize spills of VOC-containing coatings, thinners, and coating-related waste materials;

(4) Convey VOC-containing coatings, thinners, and coating-related waste materials from one location to another in closed containers or pipes;

(5) Minimize VOC emission from cleaning of storage, mixing, and conveying equipment: and

(6) Develop and implement a work practice plan to minimize VOC emissions from cleaning and from purging of equipment associated with all coating operations for which requirements are specified in paragraphs (C) and (D) of this rule. The work practice plan shall specify practices and procedures to ensure that VOC emissions from the following operations are minimized:

(a) Vehicle body wiping;

(b) Coating line purging;

(c) Flushing of coating systems;

(d) Cleaning of spray booth grates;

(e) Cleaning of spray booth walls;

(f) Cleaning of spray booth equipment;

(g) Cleaning external spray booth areas; and

(h) Other housekeeping measures (e.g., keeping solvent-laden rags in closed containers).

[Comment: If a facility subject to this rule already has a work practice plan in place under the national emission standards for hazardous air pollutants (NESHAP), the facility can add to its NESHAP work practice plan the practices and procedures for minimizing non-HAP VOC emissions].

(F) Compliance procedures and test methods.

(1) The VOC content of a coating, other than a reactive adhesive, shall be determined by the owner or operator in accordance with paragraph (B) of rule 3745-21-10 of the Administrative Code, wherein formulation data or USEPA method 24 procedures (which include various ASTM measurement methods) may be employed.

(2) VOC content of a reactive adhesive.

The VOC content of a reactive adhesive shall be determined from coating formulation data from the coating user or coating manufacturer, or by the analytical procedures of 40 CFR Part 63, Subpart PPPP, Appendix H. In the event of a dispute between coating formulation data and data obtained by

analytical procedures, the data obtained by analytical procedures shall be employed, except as otherwise provided in paragraph (B)(12) of rule 3745-21-10 of the Administrative Code.

(3) VOC content of a coating applied by a dip coater.

(a) VOC content of a coating applied by a dip coater (rolling thirty-day average VOC content) that is not an EDP primer.

The as applied VOC content of a coating applied by a dip coater shall be determined by the owner or operator as a rolling thirty-day average of the VOC content of the material (coating and thinner) added to the reservoir of the dip coater. The rolling thirty-day average VOC content (C30), expressed in pounds of VOC per gallon of coating, excluding water and exempt solvents, as applied, shall be calculated for each day of operation of the dip coater as follows:

$$C_{30} = \frac{\sum_{i=1}^{n} (A_{i,30})(C_{i,\,VOC})}{\sum_{i=1}^{n} (A_i)(V_{i,\,VOC} + V_{i,\,solids})}$$

Where:

$A_{i,30}$ = amount of material i added to the reservoir of the dip coater during a thirty-day period consisting of the day of operation of the dip coater plus the previous twenty-nine calendar days, expressed in gallons

$C_{i,VOC}$ = VOC content of material i expressed in pounds of VOC per gallon.

$V_{i,solids}$ = volume fraction of solids (nonvolatile matter) in material i.

$V_{i,VOC}$ = volume fraction of VOC in material i.

i = subscript denoting a specific material (coating or thinner) added to the reservoir of the dip coater during the thirty-day period.

n = total number of materials (coatings and thinners) added to the reservoir of the dip coater during the thirty-day period.

(b) VOC content of an EDP primer (calendar month average).

The as applied VOC content of an EDP primer shall be determined by the owner or operator as a monthly average of the VOC content of the material (coating and thinner) added to the reservoir of the dip coater during a calendar month.

The monthly average VOC content (Cmonth), expressed in pounds of VOC per gallon of solids, as applied, shall be calculated for each month of operation of the dip coater as follows:

$$C_{month} = \frac{\sum_{i=1}^{n} (A_{i,month})(C_{i,\,VOC})}{\sum_{i=1}^{n} (A_{i,month})(V_{i,\,solids})}$$

Where:

$A_{i\ month}$ = amount of material i added to the reservoir of the dip coater during a calendar month, expressed in gallons.

$C_{i,VOC}$ = VOC content of material i expressed in pounds of VOC per gallon.

$V_{i,solids}$ = volume fraction of solids (nonvolatile matter) in material i.

i = subscript denoting a specific material (coating or thinner) added to the reservoir of the dip coater during the calendar month.

n = total number of materials (coatings and thinners) added to the reservoir of the dip coater during the calendar month.

(4) Compliance with the limitations specified in paragraphs (C)(1)(c), (C)(1)(d), and (C)(1)(e) of this rule shall be determined each day of operation in accordance with the publication entitled "Protocol for Determining the Daily Volatile Organic Compound Emission Rate of Automobile and Light-Duty Truck Primer-Surfacer and Topcoat Operations" (EPA-453/R-08-002). Compliance with the limitation specified in paragraph (C)(1)(a) of this rule shall be determined each day of operation and is based upon a weighted average by volume of all coating materials employed in the coating operation in the past thirty days. Compliance with the limitation specified in paragraphs (C)(1)(b) and (C)(1)(f) of this rule is based upon a weighted average by volume of all coating materials employed in the coating operation in any one day.

(5) The solids turnover ratio (R_T) of an EDP coating operation shall be calculated as follows:

$R_T = L_S/L_E$

Where:

L_S = total volume of coating solids that is added to the EDP coating operation in a calendar month (gallons).

L_E = total volume design capacity of the EDP system, which is the total liquid volume contained in the EDP system's tanks, pumps, recirculating lines, filters, etc. at the system's designed liquid operating level (gallons).

(6) Manufacturer's formulation data may be accepted in lieu of the analytical procedures above. In the event of a dispute between coating formulation data and data obtained by analytical procedures, the data obtained by analytical procedures shall be employed, except as otherwise provided in paragraph (B)(12) of rule 3745-21-10 of the Administrative Code.

(7) Add-on pollution control equipment.

For add-on air pollution control equipment employed in accordance with paragraph (D) of this rule, the owner or operator shall:

(a) Meet the same monitoring requirements as contained in 40 CFR 63.3168 and, if appropriate, "Protocol for Determining the Daily Volatile Organic Compound Emission Rate of Automobile and Light-Duty Truck Primer-Surfacer and Topcoat Operations" (EPA-453/R-08-002); and

(b) Conduct a compliance test to determine the capture efficiency of a capture system, the control efficiency of a control device (or each control device if a combination of control devices is employed), and the overall control efficiency of the add-on air pollution control equipment in accordance with 40 CFR 63.3165 and 40 CFR 63.3166, except where 40 CFR 63.165 refers to the "Protocol for Determining Daily Volatile Organic Compound Emission Rate of Automobile and Light-Duty Truck Topcoat Operations," EPA-450/3-88-018, EPA-453/R-08-002 shall be used instead, and, if appropriate, "Protocol for Determining the Daily Volatile Organic Compound Emission Rate of Automobile and Light-Duty Truck Primer-Surfacer and Topcoat Operations" (EPA-453/R-08-002). During the compliance test, the owner or operator shall establish the operating limits (operating parameter values) for the required monitoring devices by following the requirements contained in 40 CFR 63.3167 and, if appropriate, "Protocol for Determining the Daily Volatile Organic Compound Emission Rate of Automobile and Light-Duty Truck Primer-Surfacer and Topcoat Operations" (EPA-453/R-08-002).

(G) Recordkeeping and reporting.

(1) The following types of records are to be maintained by the owner or operator of a facility subject to this rule:

(a) Compliance demonstration records for coating operations.

(b) Compliance demonstration records for coating-related activities and cleaning materials.

(c) Monitoring records for add-on air pollution control systems subject to the add-on pollution control requirements of paragraph (D) of this rule.

(2) For any coating operation subject to paragraph (C) of this rule, the owner or operator shall maintain the following records:

(a) For each coating in use at the facility:

(i) The name and VOC content as received and as applied.

(ii) The type of coating, as identified under paragraph (C) of this rule.

(b) All data, calculations, and test results (including USEPA method 24 results) used in determining the VOC content of each coating, expressed in pounds of VOC per gallon of coating, excluding water and exempt solvents, as applied.

(c) The amount (gallons) of each coating used each month at the facility.

(d) For each EDP primer coating operation, calculate the turnover ratio (R_T) when used to adjust the VOC emission limit as described in paragraphs (C)(1)(a)(ii) and (C)(1)(a)(iii) of this rule, by the following equation:

$$R_T = \frac{V_S}{V_E}, \text{ truncated after 3 decimal places.}$$

Where:

V_E = volume of EDP primer coating tank, in gallons.

V_s = volume of solids added to the EDP primer coating tank during the month, in gallons.

V_s = summation of $(A_{i,month})(V_{i,solids})$ for i=1 to i=n

$A_{i,month}$= amount of material i added to the reservoir of the dip coater during a calendar month, expressed in gallons.

$V_{i,solids}$= volume fraction of solids (nonvolatile matter) in material i.

i = subscript denoting a specific material (coating or thinner) added to the reservoir of the dip coater during the calendar month.

n = total number of materials (coatings and thinners) added to the reservoir of the dip coater during the calendar month.

Then calculate or select the appropriate limit according to paragraph (C)(1)(a) of this rule.

(e) For any coating operation subject to the add-on pollution control equipment requirements of paragraph (D) of this rule:

(i) Identification of the coating line or coating operation.

(ii) Documentation on the overall control efficiency of each individual add-on pollution control equipment and the overall control efficiency of the add-on pollution control system, including design estimates and the results of compliance tests conducted pursuant to paragraph (F)(7) of this rule.

(iii) For any coating that is controlled by add-on pollution control equipment, the name of the coating, the dates (or time periods) of control, and the amount (gallons) of such coating controlled each month.

(f) Records pertaining to a rolling thirty-day average VOC content for a dip coater, other than an EDP primer coating operation:

(i) For each day of operation, the gallons of each material (coating and thinner) added to the dip coater reservoir.

(ii) The VOC content (in pounds of VOC per gallon), volume fraction VOC, and volume fraction solids for each material added to the dip coater reservoir.

(iii) For each day of operation, the rolling thirty-day average VOC content in pounds of VOC per gallon of coating, excluding water and exempt solvent, as applied, as determined in accordance with paragraph (F)(3) of this rule.

(g) Records pertaining to a monthly average VOC content for an EDP primer coating operation:

(i) For each day of operation, the gallons of each material (coating and thinner) added to the dip coater reservoir.

(ii) The VOC content (in pounds of VOC per gallon), volume fraction VOC, and volume fraction solids for each material added to the dip coater reservoir.

(iii) For month of operation, the monthly average VOC content in pounds of VOC per gallon of solids, as determined in accordance with paragraph (F)(3)(b) of this rule.

(h) Records pertaining a coating line subject to paragraph (C)(1)(b) or paragraph (C)(1)(f) of this rule in which the owner or operator elects to demonstrate the ongoing status of compliance with the applicable emission limitation by means of a daily volume-weighted average VOC content:

(i) Date of operation.

(ii) The name and identification number of each coating, as applied on the date of operation.

(iii) The mass of VOC per volume (excluding water and exempt solvents) and the volume of each coating (excluding water and exempt solvents), as applied on the date of operation.

(iv) The daily volume-weighted average VOC content of all coatings, as applied on the date of operation, calculated in accordance with the equation specified in paragraph (B)(9) of rule 3745-21-10 of the Administrative Code for $Cvoc,_2$.

(i) For any coating operation subject to paragraph (C)(1)(c), (C)(1)(d) or (C)(1)(e) of this rule, the owner or operator shall maintain the records specified in "Protocol for Determining the Daily Volatile Organic Compound Emission Rate of Automobile and Light-Duty Truck Primer-Surfacer and Topcoat Operations" (EPA-453/R-08-002).

(3) Compliance demonstration records for coating-related activities and cleaning materials.

For the coating-related activities and cleaning materials, the owner or operator shall maintain the following records on a monthly basis:

(a) A copy of any documents and the work implementation plan that address the procedures for ensuring compliance with the work practices under paragraph (E) of this rule; and

(b) A determination on whether the work practices are being met.

(4) Monitoring records for add-on pollution control equipment.

(5) For an add-on pollution control system that is employed in accordance with paragraph (D) of this rule, the owner or operator shall maintain the same monitoring records as specified under paragraph (K)(5) of rule 3745-21-15 of the Administrative Code.

(6) All records made to determine compliance with this rule shall be maintained for five years from the date such record is created and shall be made available to the director or the director's designee within ninety days of a request.

(H) Compliance dates.

(1) The owner or operator of a coating operation that is subject to this rule shall comply with the requirements of this rule no later than the following dates:

(a) For any subject coating operation for which installation commenced before the effective date of this rule, the compliance date for the coating operation is either twelve months after the effective date of this rule or the date of initial startup of the coating operation, whichever is later.

(b) For any subject coating operation for which installation commenced on or after the effective date of this rule, the compliance date for the coating operation is the initial startup date of the coating operation.

(2) The owner or operator of a coating operation that is subject to this rule shall demonstrate compliance with paragraph (G)(2)(e) of this rule by testing the control device on each subject source in accordance with paragraph (G)(2)(e) of this rule according to the following:

(a) For any owner or operator of a coating operation subject to paragraph (H)(1)(a) of this rule, by no later than one hundred eighty days after the coating operations compliance date.

(b) For any owner or operator of a coating operation subject to paragraph (H)(1)(b) of this rule, within one hundred eighty days after the coating operation's compliance date.

(c) The Ohio environmental protection agency may accept the results of an emission test conducted prior to the effective date of this rule, if the owner or operator provides information and data to the Ohio environmental protection agency which demonstrate that the test was witnessed by the Ohio environmental protection agency or its delegated agent, that an approved USEPA emission test method was employed, and that the operation of the process was consistent with the current operating conditions and operating capacity.

(3) Additional testing of a subject coating operation and its VOC add-on air pollution control equipment in accordance with paragraph (G)(2)(e) of this rule may be required by the director to ensure continued compliance.

(I) Requirements on applicability notification, compliance certification and permit requirements.

(1) The owner or operator of a coating operation that is subject to this rule with an initial startup date before the effective date of this rule shall notify the Ohio environmental protection agency district office or local air agency in writing that the coating operation is subject to this rule. The notification, which shall be submitted not later than sixty days after the effective date of this rule (or within sixty days after the coating operation becomes subject to this rule), shall provide the following information:

(a) Name and address of the owner or operator;

(b) Address (i.e., physical location) of the facility;

(c) Equipment description and Ohio EPA application number (if assigned) of the subject process;

(d) Identification of the VOC emission requirement, the means of compliance, and the compliance date for the subject process;

(e) Submission of an application for an operating permit or an application for a modification to an operating permit in accordance with Chapter 3745-77 of the Administrative Code (for sources subject to the Title V permit program) or in accordance with Chapter 3745-31 of the Administrative Code (for sources not subject to the Title V permit program) for each subject process:

(i) That does not possess an effective operating permit, or

(ii) That does possess an effective operating permit and the owner or operate cannot certify in writing to the director that such subject process is in compliance with all requirements of this rule. An application for an operating permit is not required provided the subject process is operating under an effective permit and certifies compliance. Such certification shall include all compliance certification requirements under paragraph (I)(3) of this rule.

(2) The owner or operator of a coating operation that is subject to this rule with an initial startup date on or after the effective date of this rule shall notify the Ohio environmental protection agency district office or local air agency in writing that the coating operation is subject to this rule. The notification, which shall be submitted not later than either the date of initial startup of the subject coating operation, or sixty days after the effective date of this rule (whichever is later), shall provide the information listed under paragraph (I)(1) of this rule. The application for an installation permit under rule 3745-31-02 of the Administrative Code may be used to fulfill the notification requirements of this paragraph.

(3) Compliance certification.

(a) The owner or operator of a coating operation that is subject to this rule shall notify the Ohio environmental protection agency district office or local air agency in writing within thirty days following the completion of any of the following requirements:

(i) For a process subject to the VOC emission requirements in paragraph (C) of this rule, the first documented achievement of compliance with each of the requirements;

(ii) For a process subject to the VOC add-on air pollution control equipment in paragraph (D) of this rule:

(a) The completion of installation and initial use of a VOC emission control system for subject process;

(b) The completion of installation and initial use of any monitoring devices required under paragraph (F)(7) of this rule for the subject process; and

(c) The completion of any compliance testing conducted in accordance with paragraph (F)(7) of this rule to demonstrate compliance with the applicable control requirements.

(b) The compliance certification under paragraph (I)(3)(a) of this rule shall provide the following, where applicable:

(i) A description of the requirements;

(ii) A description of the VOC emission control system;

(iii) A description of the monitoring devices;

(iv) A description of the records that document continuing compliance;

(v) The results of any compliance tests, including documentation of test data;

(vi) The results of any records that document continuing compliance, including calculations; and

(vii) A statement by the owner or operator of the facility as to whether the subject process has complied with the requirement(s).

(J) Requirements for an owner or operator of an automobile and light-duty truck assembly plant coating operation that determines they are not subject to one or more of the following requirements:

(1) The owner or operator of a coating operation that determines the facility's total actual VOC emissions, before the application of control systems and devices, from all automobile and light-duty truck assembly plant coating operations, including related cleaning activities, are not equal to or greater than the limitation specified in paragraph (A)(2)(a) of this rule, shall select one of the following methods and maintain the following records for a period of five years:

(a) Monthly recordkeeping method.

(i) Total gallons of each coating and cleaning solvent used per calendar month;

(ii) VOC content (per cent by weight) of each coating and cleaning solvent used per calendar month;

(iii) The total monthly VOC emissions, before the application of capture systems and control devices, in pounds for all coatings and cleaning solvents employed per calendar month; and

(iv) The rolling twelve-month average of VOC emissions, in tons, before the application of capture systems and control devices. The rolling twelve-month average shall be calculated as the total VOC emissions, for the current calendar month, plus the total VOC emissions from the previous eleven calendar months.

(b) Daily emissions method.

Provided total VOC emissions are less than 15.0 pounds per day, the owner or operator may elect to maintain the following records in lieu of the records required under paragraph (J)(1)(a) of this rule:

(i) Total pounds or gallons of each coating and cleaning solvent used per day;

(ii) VOC content (per cent by weight) of each coating used per day; and

(iii) The total daily VOC emissions, before the application of capture systems and control devices, in pounds for all coatings employed per day.

(2) The owner or operator of a coating operation that determines a coating(s) is not subject to paragraph (C) of this rule because the use of the coating(s) in all processes are supplied by the manufacturer in containers with a net volume of sixteen ounces or less, or a net weight of one pound or less, in accordance with paragraph (A)(3)(b)(ii) of this rule, shall maintain records for a period of five years identifying that all supplied containers of said materials meet the exemption.

(3) The owner or operator of a coating operation that determines a coating(s) is not subject to paragraph (C) of this rule because the use of the coating(s) in all processes meets the low usage coating exemption, in accordance with paragraph (A)(3)(b)(iii) of this rule, shall maintain the following records for a period of five years:

(a) The name of each separate coating formulation;

(b) The amount (gallons) used during the month at the facility for each separate coating formulation; and

(c) The total amount (gallons) used during the calendar year at the facility for each separate coating formulation and for all such coatings formulations combined.

Effective: 05/12/2011

R.C. 119.032 review dates: 08/25/2013

CERTIFIED ELECTRONICALLY
Certification

05/02/2011
Date

Promulgated Under: 119.03
Statutory Authority: 3704.03(E)
Rule Amplifies: 3704.03(A), 3704.03(E)

Chapter 3745-22: Oxygenated Fuel Requirements

Rules in Chapter 3745-22 have been repealed as of 10/31/96

Chapter 3745-23: Nitrogen Oxide Standards

Contact: Gary Engler 614-644-3623
Gary.Engler@epa.ohio.gov

3745-23-01 **Definitions.**

(A) Except as otherwise provided in this rule, the definitions in rule 3745-15-01 of the Administrative Code shall apply to this chapter.

(B) "USEPA" means the United States environmental protection agency.

(C) Referenced materials. This chapter includes references to certain matter or materials. The text of the referenced materials is not included in the rules contained in this chapter. Information on the availability of the referenced materials as well as the date of, and/or the particular edition or version of the material is included in this rule. For materials subject to change, only the specific versions specified in this rule are referenced. Material is referenced as it exists on the effective date of this rule. Except for subsequent annual publication of existing (unmodified) Code of Federal Regulation compilations, any amendment or revision to a referenced document is not applicable unless and until this rule has been amended to specify the new dates.

(1) Availability. The referenced materials are available as follows:

(a) Code of Federal Regulations. Information and copies may be obtained by writing to: "Superintendent of Documents, Attn: New Orders, PO Box 371954, Pittsburgh, PA 15250-7954." The full text of the CFR is also available in electronic format at www.ecfr.gov. The CFR compilations are also available for inspection and use at most public libraries and "The State Library of Ohio."

(2) Referenced materials:

(a) 40 CFR 50.11; "National Primary and Secondary Ambient Air Quality Standards for Nitrogen Dioxide; as published in the July 1, 2013 Code of Federal Regulations.

(b) 40 CFR Part 50, Appendix F; "Measurement Principle and Calibration Procedure for the measurement of Nitrogen Dioxide in the Atmosphere (Gas Phase Chemiluminescence);" as published in the July 1, 2013 Code of Federal Regulations.

(c) 40 CFR Part 53; "Ambient Air Monitoring Reference and Equivalent Methods;" as published in the July 1, 2013 Code of Federal Regulations.

Effective: 09/08/2014

R.C. 119.032 review dates: 05/20/2014 and 09/08/2019

CERTIFIED ELECTRONICALLY
Certification

08/29/2014
Date

Promulgated Under: 119.03
Statutory Authority: 3704.03(D)
Rule Amplifies: 3704.03(A), 3704.03(D)
Prior Effective Dates: 2/15/72, 9/23/02, 5/15/06, 4/18/09

3745-23-02 **Methods of measurement.**

[Comment: For dates of non-regulatory government publications, publications of recognized organizations and associations, federal rules, and federal statutory provisions referenced in this rule, see paragraph (C) of rule 3745-23-01 of the Administrative Code titled "Referenced materials."]

(A) For purposes of ascertaining, defining, and measuring ambient air quality, nitrogen dioxide shall be measured by the methods stated in paragraph (B) of this rule or by such other methods as may be approved by the director. Such measurements shall be corrected to standard conditions for purposes of comparing measurements with the ambient air quality standard set forth in rule 3745-25-02 of the Administrative Code.

(B) Concentrations of nitrogen dioxide shall be determined through the use of a reference method required by 40 CFR 50.11 based on 40 CFR Part 50, Appendix F, or through the use of continuous sampling and recording devices as approved by USEPA in accordance with 40 CFR Part 53 and designated reference or equivalent methods.

Effective: 09/08/2014

R.C. 119.032 review dates: 05/20/2014 and 09/08/2019

CERTIFIED ELECTRONICALLY
Certification

08/29/2014
Date

Promulgated Under: 119.03
Statutory Authority: 3704.03(D)
Rule Amplifies: 3704.03(A), 3704.03(D)
Prior Effective Dates: 2/15/72, 9/23/02, 5/15/06, 4/18/09

Chapter 3745-24: NOx and VOC Emission Statements

Contact: Mike Ahern 614-644-3631
Mike.Ahern@epa.ohio.gov

3745-24-01 **Definitions.**

(A) Except as otherwise provided in this rule, the definitions in rule 3745-15-01 of the Administrative Code shall apply to this chapter.

(B) As used in Chapter 3745-24 of the Administrative Code:

(1) "Actual emissions" means the rate at which an air contaminant is actually emitted into the ambient air.

(2) "Oxides of nitrogen (NOx)" means all oxides of nitrogen which are determined to be ozone precursors, including but not limited to, nitrogen oxide and nitrogen dioxide, but excluding nitrous oxide.

(3) "R&D sources" means research and development sources, as defined in division (O) of section 3704.01 of the Revised Code.

(4) "Submit" or "submitted" means to present, or to have presented, to the Ohio environmental protection agency a document that is required under this chapter, and to have that document received by the Ohio environmental protection agency (or postmarked) by midnight on the due date specified in this chapter. Date of the receipt of the document is demonstrated by the postmark date, if sent by United States postal service; the electronic signature date, if submitted through the Ohio environmental protection agency's electronic reporting system; the transmittal date, if submitted through facsimile; or the date of the signature of the Ohio environmental protection agency employee receiving the document, if hand delivered in person to the Ohio environmental protection agency. The hard copy form with original signature must be provided to the Ohio environmental protection agency after a facsimile is submitted.

(5) "Volatile organic compounds (VOC)" has the same definition as that contained in paragraph (B)(6) of rule 3745-21-01 of the Administrative Code.

Effective: 02/16/2008

R.C. 119.032 review dates: 12/16/2010

CERTIFIED ELECTRONICALLY
Certification

02/06/2008
Date

Promulgated Under: 119.03
Statutory Authority: 3704.03(E) and (I)
Rule Amplifies: 3704.03
Prior Effective Dates: 4/1/94, 12/16/05

3745-24-02 **Applicability.**

(A) Except as provided in paragraph (B) of this rule, the requirements of this chapter shall apply to any facility that emits twenty-five tons or more of NOx and/or twenty-five tons or more of VOC during the calendar year and is located in a county designated as nonattainment for the National Ambient Air Quality Standards for ozone. (In determining whether or not a facility emits twenty-five tons or more of NOx or twenty-five tons or more of VOC, any source that is exempt under paragraph (C) of rule 3745-24-04 of the Administrative Code shall not be included in the emission estimate.)

(B) Any facility that is located in a county described in paragraph (A) of this rule shall be exempt from the requirements of this Chapter beginning January 1 of the year following the U.S. Environmental Protection Agency redesignation of the county to attainment with the National Ambient Air Quality Standard for Ozone.

(C) Any facility meeting the criteria in paragraph (A) of this rule that is permanently shut down shall file a final emission statement in accordance with rule 3745-24-03 and 3745-24-04 of the Administrative Code.

Replaces: 3745-24-02

Effective: 12/16/2005

R.C. 119.032 review dates: 12/16/2010

CERTIFIED ELECTRONICALLY
Certification

12/05/2005
Date

Promulgated Under: 119.03
Statutory Authority: 3704.03
Rule Amplifies: 3704.03
Prior Effective Dates: 4/1/94, 7/31/97

3745-24-03 **Deadlines for submission of the emission statements.**

(A) The emission statements for calendar year 1992 shall be submitted no later than July 1, 1994. The emission statements for calendar years 1993 through 2004 shall be submitted by November fifteenth of the calendar year following the year covered by the emission statements. Beginning with reporting year 2005 and each reporting year thereafter, except as provided by paragraph (B) of this rule, emission statements must be submitted by April fifteenth of the calendar year following the year covered by the emission statements.

(B) Emission statements due during calendar year 2008 and required under paragraph (A) of this rule shall be submitted by June 6, 2008.

Effective: 02/16/2008

R.C. 119.032 review dates: 12/16/2010

CERTIFIED ELECTRONICALLY
Certification

02/06/2008
Date

Promulgated Under: 119.03
Statutory Authority: 3704.03(E) and (I)
Rule Amplifies: 3704.03
Prior Effective Dates: 4/1/94, 12/16/05

3745-24-04 **Emission statement requirements.**

(A) Any owner or operator of any affected facility that meets the applicability requirements specified in rule 3745-24-02 of the Administrative Code shall submit emission statements in accordance with the deadlines specified in rule 3745-24-03 of the Administrative Code. If NOx or VOC is emitted from a facility at or above the reporting threshold, both pollutants must be included in the emissions statement even if one of the pollutants is emitted at a level below the reporting threshold.

(B) The emission statements shall be submitted to the Ohio EPA in a form and manner prescribed by the director and shall include at a minimum the following information:

(1) The certifying individual shall certify that the information contained in the statement is accurate to the best of their knowledge and that all estimates and judgements relating to such information have been made in good faith.

(2) Estimated actual emissions of NOx and VOC, in tons per year.

(3) Any supporting information required by the director to confirm compliance with paragraph (B) above.

(C) Exemptions:

(1) Emission statements shall not apply to any source that would be exempt pursuant to division (A) of section 3704.011 of the Revised Code based solely on NOx and VOC emissions regardless of whether the source meets the exceptions provided in divisions (A)(1) to (A)(5) of section 3704.011 of the Revised Code, or generates emissions of carbon monoxide, lead, particulates and/or sulfur dioxide in excess of ten pounds per day.

(2) R&D sources at a facility where the combined potential to emit for all of the R&D sources is less than five tons per year for NOx and less than five tons per year for VOC or where the owner or operator maintains records which demonstrate that the combined actual emissions for all of the R&D sources does not exceed five tons per year for NOx and five tons per year for VOC, are not required to complete the emission statement.

Replaces: 3745-24-04

Effective: 12/16/2005

R.C. 119.032 review dates: 12/16/2010

CERTIFIED ELECTRONICALLY
Certification

12/05/2005
Date

Promulgated Under: 119.03
Statutory Authority: 3704.03
Rule Amplifies: 3704.03
Prior Effective Dates: 4/1/94

Chapter 3745-25: Emergency Episode Standards

Contact: Paul Braun 614-644-3734
paul.braun@epa.ohio.gov

3745-25-01 **Definitions and reference to materials.**

[Comment: For dates of non-regulatory government publications, publications of recognized organizations and associations, federal rules, and federal statutory provisions referenced in this rule, see paragraph (B) of this rule titled "Referenced materials."]

(A) The following definitions apply to this chapter:

(1) "PM10" means particulate matter with an aerodynamic diameter less than or equal to a nominal ten micrometers as measured by a reference method based on 40 CFR Part 50, Appendix J and designated in accordance with 40 CFR Part 53 or an equivalent method designated in 40 CFR Part 53.

(2) "PM2.5" means particulate matter with an aerodynamic diameter less than or equal to a nominal 2.5 micrometers as measured either by a reference method that is based on 40 CFR Part 50, Appendix L and designated in accordance with 40 CFR Part 53 or by an equivalent method designated in accordance with 40 CFR Part 53.

(3) "Primary ambient air quality standard" means the levels of air quality which are necessary, with an adequate margin of safety, to protect the public health.

(4) "Secondary ambient air quality standards" means the levels of air quality which are necessary to protect the public welfare from any known or anticipated adverse effects of a pollutant.

(B) Referenced materials. This chapter includes references to certain matter or materials. The text of the referenced materials is not included in the rules contained in this chapter. Information on the availability of the referenced materials as well as the date of, and/or the particular edition or version of the material is included in this rule. For materials subject to change, only the specific versions specified in this rule are referenced. Material is referenced as it exists on the effective date of this rule. Except for subsequent annual publication of existing (unmodified) Code of Federal Regulation compilations, any amendment or revision to a referenced document is not applicable unless and until this rule has been amended to specify the new dates.

(1) Availability. The referenced materials are available as follows:

(a) Code of Federal Regulations. Information and copies may be obtained by writing to: "Superintendent of Documents, Attention: New Orders, PO Box 371954, Pittsburgh, PA 15250-7954." The full text of the CFR is also available in electronic format at www.access.gpo.gov/nara/cfr/. The CFR compilations are also available for inspection and copying at most public libraries and "The State Library of Ohio."

(2) Referenced materials:

(a) 40 CFR Part 50, Appendix A; "Reference Method for the Determination of Sulfur Dioxide in the Atmosphere (Pararosaniline Method);" 47 FR 54899, Dec. 6, 1982; 48 FR 17355, Apr. 22, 1983.

(b) 40 CFR Part 50, Appendix C; "Measurement Principle and Calibration Procedure for the Measurement of Carbon Monoxide in the Atmosphere (Non-Dispersive Infrared Photometry);" 47 FR 54922, Dec. 6, 1982; 48 FR 17355, Apr. 22, 1983.

(c) 40 CFR Part 50, Appendix G; "Reference Method for the Determination of Lead in Suspended Particulate Matter Collected From Ambient Air;" 43 FR 46258, Oct. 5, 1978; 44 FR 37915, June 29, 1979, as amended at 46 FR 44163, Sept. 3, 1981; 52 FR 24664, July 1, 1987; 73 FR 67052, Nov. 12, 2008.

(d) 40 CFR Part 50, Appendix I; "Interpretation of the 8-Hour Primary and Secondary National Ambient Air Quality Standards for Ozone;" 62 FR 38895, July 18, 1997.

(e) 40 CFR Part 50, Appendix J; "Reference Method for the Determination of Particulate Matter as PM10 in the Atmosphere;" 52 FR 24664, July 1, 1987; 52 FR 29467, Aug. 7, 1987

(f) 40 CFR Part 50, Appendix K; "Interpretation of the National Ambient Air Quality Standards for Particulate Matter;" 71 FR 61224, Oct. 17, 2006.

(g) 40 CFR Part 50, Appendix L; "Reference Method for the Determination of Fine Particulate Matter as PM2.5 in the Atmosphere;" 62 FR 38714, July 18, 1997, as amended at 64 FR 19719, Apr. 22, 1999; 71 FR 61226, Oct. 17, 2006.

(h) 40 CFR Part 50, Appendix N; "Interpretation of the National Ambient Air Quality Standards for PM2.5;" 71 FR 61227, Oct. 17, 2006, as amended at 73 FR 1502, Jan. 9, 2008.

(i) 40 CFR Part 50, Appendix R; "Interpretation of the National Ambient Air Quality Standards for Lead;" 73 FR 67054, Nov. 12, 2008.

(j) 40 CFR Part 50, Appendix S; "Interpretation of the Primary National Ambient Air Quality Standards for Oxides of Nitrogen (Nitrogen Dioxide);" 75 FR 6532, Feb. 9, 2010.

(k) 40 CFR Part 50, Appendix T; "Interpretation of the Primary National Ambient Air Quality Standards for Oxides of Sulfur (Sulfur Dioxide);" 75 FR 35595, June 23, 2010.

(l) 40 CFR Part 53; "Ambient Air Monitoring Reference and Equivalent Methods;" as published in the July 1, 2010 Code of Federal Regulations.

Effective: 06/14/2012

R.C. 119.032 review dates: 04/18/2014

CERTIFIED ELECTRONICALLY
Certification

06/04/2012
Date

Promulgated Under: 119.03
Statutory Authority: 3704.03(E), 3704.032
Rule Amplifies: 3704.03(A), 3704.03(D), 3704.03(E), 3704.032
Prior Effective Dates: 04/18/09

3745-25-02 **Ambient air quality standards.**

[Comment: For dates of non-regulatory government publications, publications of recognized organizations and associations, federal rules, and federal statutory provisions referenced in this rule, see paragraph (B) of rule 3745-25-01 of the Administrative Code titled "Referenced materials."]

Primary ambient air quality standards define levels of air quality which are necessary, with an adequate margin of safety, to protect the public health. Secondary ambient air quality standards define levels of air quality which are necessary to protect the public welfare from any known or anticipated adverse effects of a pollutant.

(A) Particulate matter:

(1) For the purpose of determining attainment of the primary and secondary ambient air quality standards for particulate matter applicable throughout the state of Ohio, particulates shall be measured in the ambient air as both particles with an aerodynamic diameter less than or equal to a nominal ten micrometers (PM10) and particles with an aerodynamic diameter less than or equal to a nominal 2.5 micrometers (PM2.5).

(2) The level of the primary and secondary twenty-four-hour ambient air quality standards for PM10 is one hundred fifty micrograms per cubic meter, twenty-four-hour midnight to midnight average concentration. The standards are attained when the expected number of days per calendar year with a twenty-four-hour average concentration above one hundred fifty micrograms per cubic meter, as determined in accordance with 40 CFR Part 50, Appendix K , is equal to or less than one day, averaged over three years.

(3) The level of the primary and secondary twenty-four-hour standards for PM2.5 is thirty-five micrograms per cubic meter, twenty-four-hour midnight to midnight average concentration. The standards are attained when the ninety-eighth percentile twenty-four-hour average concentration, as determined in accordance with 40 CFR Part 50, Appendix N, is less than or equal to thirty-five micrograms per cubic meter, averaged over three years.

(4) The level of the primary and secondary annual standards for PM2.5 is 15.0 micrograms per cubic meter, annual average concentration. The standards are attained when the three-year average concentration as determined in accordance with 40 CFR Part 50, Appendix N, is less than or equal to 15.0 micrograms per cubic meter.

(B) Sulfur dioxide:

(1) The primary ambient air quality standards for sulfur dioxide applicable throughout the state of Ohio shall be as follows:

(a) The maximum annual arithmetic mean concentration not to be exceeded in a calendar year shall be 0.030 parts per million by volume (ppm). The annual arithmetic mean shall be rounded to three decimal places (fractional parts equal to or greater than 0.0005 ppm shall be rounded up).

(b) The maximum twenty-four-hour concentration not to be exceeded more than once per calendar year shall be 0.14 parts per million by volume (ppm). The twenty-four-hour averages shall be determined from successive nonoverlapping twenty-four hour blocks starting at midnight each calendar day and shall be rounded to two decimal places (fractional parts equal to or greater than 0.005 ppm shall be rounded up).

(c) The level of the primary one-hour annual ambient air quality standard for oxides of sulfur is seventy-five parts per billion (ppb), measured in the ambient air as sulfur dioxide. The standard is attained when the three-year average of the annual (99th percentile) of the daily maximum one-hour average concentrations is less than or equal to seventy-five parts per billion (ppb), as determined in accordance with 40 CFR Part 50, Appendix T.

(2) The secondary ambient air quality standard for sulfur dioxide applicable throughout the state of Ohio shall be a maximum three-hour concentration not to be exceeded more than once per calendar year of 0.5 parts per million by volume (ppm). The three-hour averages shall be determined from successive nonoverlapping three-hour blocks starting at midnight each calendar day and shall be rounded to one decimal place (fractional parts equal to or greater than 0.05 ppm shall be rounded up).

(3) For purposes of ascertaining, defining and measuring ambient air quality, concentrations of sulfur dioxide shall be determined either through twenty-four-hour intermittent sampling utilizing the "Reference Method" in accordance with 40 CFR Part 50, Appendix A or through the use of a continuous sampling and recording device which has been designated an "Equivalent Method" in accordance with 40 CFR Part 53.

(C) Carbon monoxide:

(1) The primary ambient air quality standards for carbon monoxide, applicable throughout the state of Ohio, shall be as follows:

(a) The maximum eight-hour arithmetic mean concentration not to be exceeded more than once per year shall be nine parts per million by volume (ppm).

(b) The maximum one-hour arithmetic mean concentration not to be exceeded more than once per year shall be thirty-five parts per million by volume (ppm).

(2) For purposes of ascertaining, defining and measuring ambient air quality, concentrations of carbon monoxide shall be determined either through twenty-four-hour intermittent sampling utilizing the "Reference Method" in accordance with 40 CFR Part 50, Appendix C or through the use of a continuous sampling and recording device which has been designated an "Equivalent Method" in accordance with 40 CFR Part 53.

(D) Ozone:

(1) The primary and secondary ambient air quality standard for ozone applicable throughout the state of Ohio, shall be 0.075 parts per million by volume (ppm) daily maximum 8-hour average, measured by a reference method based on 40 CFR Part 50, Appendix D and designated in accordance with 40 CFR Part 53 or an equivalent method designated in accordance with 40 CFR Part 53.

(2) The 8-hour primary and secondary ozone ambient air quality standards are met at an ambient air quality monitoring site when the 3-year average of the annual fourth-highest daily maximum 8-hour average ozone concentration is less than or equal to 0.075 ppm, as determined in accordance with 40 CFR Part 50, Appendix P to this part

(E) Nitrogen dioxide:

(1) The primary ambient air quality standards for oxides of nitrogen applicable throughout the state of Ohio, measured in the ambient air as nitrogen dioxide, shall be as follows:

(a) The maximum annual arithmetic mean concentration not to be exceeded in a calendar year is fifty-three parts per billion by volume (ppb). The standard is attained when the annual average concentration in a calendar year is less than or equal to fifty-three parts per billion by volume (ppb), as determined in accordance with 40 CFR Part 50, Appendix S.

(b) The one-hour average concentration not to be exceeded is one hundred parts per billion by volume (ppb). The standard is attained when the three-year average of the annual ninety-eighth percentile of the daily maximum one-hour average concentration is less than or equal to one hundred parts per billion by volume (ppb), as determined in accordance with 40 CFR Part 50, Appendix S.

(2) The secondary ambient air quality standard for oxides of nitrogen applicable throughout the state of Ohio shall be 0.053 parts per million by volume (ppm),

annual arithmetic mean concentration, measured in the ambient air as nitrogen dioxide. The standard is attained when the annual arithmetic mean concentration in a calendar year is less than or equal to 0.053 parts per million by volume (ppm), rounded to three decimal places (fractional parts equal to or greater than 0.0005 ppm must be rounded up), as determined in accordance with 40 CFR Part 50, Appendix S.

(3) For purposes of ascertaining, defining and measuring ambient air quality, concentrations of oxides of nitrogen shall be determined either through twenty-four hour intermittent sampling utilizing the "Reference Method" in accordance with 40 CFR Part 50, Appendix S or through the use of a continuous sampling and recording device which has been designated an "Equivalent Method" in accordance with 40 CFR Part 53.

(F) Lead:

(1) The primary and secondary ambient air quality standards for lead (Pb) and its compounds are 0.15 micrograms per cubic meter, arithmetic mean concentration over a three-month period, measured in the ambient air as Pb. The standards for Pb are attained when the maximum arithmetic three-month mean concentration for a three-year period is less than or equal to 0.15 micrograms per cubic meter, as determined in accordance with 40 CFR Part 50, Appendix R.

(2) For purposes of ascertaining, defining and measuring ambient air quality, concentrations of lead shall be determined either through twenty-four hour intermittent sampling utilizing the "Reference Method" in accordance with 40 CFR Part 50, Appendix G or through the use of a continuous sampling and recording device which has been designated an "Equivalent Method" in accordance with 40 CFR Part 53.

Effective: 06/14/2012

R.C. 119.032 review dates: 04/18/2014

CERTIFIED ELECTRONICALLY
Certification

06/04/2012
Date

Promulgated Under: 119.03
Statutory Authority: 3704.03(E), 3704.032
Rule Amplifies: 3704.03(A), 3704.03(D), 3704.03(E), 3704.032
Prior Effective Dates: 9/15/70, 12/31/70, 2/15/72, 10/19/79, 12/28/79, 6/18/80, 3/27/81, 6/14/91, 10/31/96, 9/23/02, 11/5/02, 4/14/03, 01/23/06, 03/27/06, 05/15/06, 02/01/08, 08/25/08, 04/18/09

3745-25-03 **Air pollution emergencies and episode criteria.**

The purpose of rules 3745-25-02 to 3745-25-05 of the Administrative Code is to prevent the excessive buildup of air contaminants during air pollution episodes, thereby preventing the occurrence of an emergency due to the effects of these air contaminants on the health of persons.

(A) Conditions justifying the proclamation of an air pollution "Alert", air pollution "Warning", or air pollution "Emergency" shall be deemed to exist whenever the director determines that the accumulation of air contaminants in any place is attaining or has attained levels which could, if such levels are sustained or exceeded, lead to a substantial threat to the health of persons. In making this determination, the director will be guided by the episode stage criteria in paragraphs (B) to (F) of this rule.

(B) "Air pollution forecast": An internal watch by the Ohio environmental protection agency shall be actuated by a national weather service advisory that an "Atmospheric Stagnation Advisory" is in effect or the equivalent local forecast of stagnant atmospheric condition. The air pollution forecast for photochemical oxidants shall take into consideration, but not be limited to, ambient temperatures, surface winds, and ultra-violet solar radiation levels.

(C) "Alert": The "Alert" level is that concentration of air contaminants at which first stage control actions are to begin. An "Alert" will be declared when any one of the levels specified in paragraphs (C)(1) to (C)(5) of this rule is reached at any monitoring site and meteorological conditions are such that the air contaminant concentrations can be expected to remain at the specified level or reoccur during the next twenty-four hours unless control actions are taken:

(1) Sulfur dioxide: eight hundred micrograms per cubic meter (0.3 parts per million by volume), twenty-four-hour average; or

(2) PM10: three hundred fifty micrograms per cubic meter, twenty-four-hour average; or

(3) Carbon monoxide: seventeen milligrams per cubic meter (fifteen parts per million by volume), eight-hour average; or

(4) Photochemical oxidants measured as ozone: four hundred micrograms per cubic meter (0.2 parts per million by volume), one-hour average; or

(5) Nitrogen dioxide:

(a) One thousand thirty micrograms per cubic meter (0.6 parts per million by volume), one-hour average; or

(b) Two hundred eighty-two micrograms per cubic meter (0.15 parts per million by volume), twenty-four-hour average.

(D) "Warning": The "Warning" level indicates that air quality is continuing to degrade and that additional control measures are necessary. A "Warning" will be declared when any one of the levels specified in paragraphs (D)(1) to (D)(5) of this rule is reached at any monitoring site and meteorological conditions are such that the air contaminant concentrations can be expected to remain at the specified levels or reoccur during the next twenty-four hours unless control actions are taken:

(1) Sulfur dioxide: one thousand six hundred micrograms per cubic meter (0.6 parts per million by volume), twenty-four-hour average; or

(2) PM10: four hundred twenty micrograms per cubic meter, twenty-four-hour average; or

(3) Carbon monoxide: thirty-four milligrams per cubic meter (thirty parts per million by volume), eight-hour average; or

(4) Photochemical oxidants measured as ozone: eight hundred micrograms per cubic meter (0.4 parts per million by volume), one-hour average; or

(5) Nitrogen dioxide:

(a) Two thousand two hundred sixty micrograms per cubic meter (1.2 parts per million by volume), one-hour average; or

(b) Five hundred sixty-five micrograms per cubic meter (0.3 parts per million by volume), twenty-four-hour average.

(E) "Emergency": The "Emergency" level indicated that air quality is continuing to degrade to a level that should never be reached and that most stringent control actions are necessary. An "Emergency" will be declared when any one of the levels specified in paragraph (E)(1) to (E)(5) of this rule is reached at any monitoring site:

(1) Sulfur dioxide: two thousand one hundred micrograms per cubic meter (0.8 parts per million by volume), twenty-four-hour average; or

(2) PM10: five hundred micrograms per cubic meter, twenty-four-hour average; or

(3) Carbon monoxide: forty-six milligrams per cubic meter (forty parts per million by volume); eight-hour average, or

(4) Photochemical oxidants measured as ozone: One thousand micrograms per cubic meter (0.5 parts per million by volume), one-hour average; or

(5) Nitrogen dioxide:

(a) Three thousand micrograms per cubic meter (1.5 parts per million by volume), one-hour average; or

(b) Seven hundred fifty micrograms per cubic meter (0.4 parts per million by volume), twenty-four-hour average.

(F) "Termination": Once declared, any episode stage reached by application of these criteria will remain in effect until the criteria for that episode stage are no longer met. At such time, the next lower episode stage will be assumed or the episode may be terminated completely if no episode stage criteria are met.

Effective: 08/21/2009

R.C. 119.032 review dates: 04/18/2014

CERTIFIED ELECTRONICALLY
Certification

08/11/2009
Date

Promulgated Under: 119.03
Statutory Authority: 3704.03(E), 3704.032
Rule Amplifies: 3704.03(A), 3704.03(D), 3704.03(E), 3704.032
Prior Effective Dates: 2/15/72, 12/15/78, 9/3/92, 4/18/09

3745-25-04 **Air pollution emergency emission control action programs.**

(A) Any person responsible for the operation of a source of air contaminants which emits 0.25 tons per day or more of air contaminants for which air quality standards have been adopted shall prepare emission control action programs, consistent with good industrial practices and safe operating procedures, for reducing the emission of air contaminants into the ambient air during periods of an air pollution "Alert", air pollution "Warning", and air pollution "Emergency". Emission control action programs shall be designed to reduce or eliminate emissions of air contaminants into the ambient air in accordance with the objectives set forth in tables 1 to 5 of the appendix to this rule.

(B) Emission control action programs required by paragraph (A) of this rule shall be in writing and show the source of air contamination, the approximate amount of reduction of air contaminants, the approximate time required to effect the program, a brief description of the manner in which the reduction will be achieved during each stage of an air pollution episode, and such other information as the director shall deem pertinent.

(C) Emission control action programs shall be filed with the director at the following times:

(1) Existing sources as of December 15, 1978 - shall file not later than June 15, 1979;

(2) New sources that are, or will be, part of a facility, as defined in Chapter 3745-77 of the Administrative Code, and that are required to obtain a Title V permit under Chapter 3745-77 of the Administrative Code - shall file with an application for a Title V permit, in accordance with rule 3745-77-04 of the Administrative Code;

(3) New sources not part of a facility, as defined in Chapter 3745-77 of the Administrative Code, and that are not required to obtain a Title V permit under Chapter 3745-77 of the Administrative Code - shall file with an application for a permit-to-install and operate, in accordance with rule 3745-31-02 of the Administrative Code.

(D) During a condition of an air pollution "Alert", air pollution "Warning", and air pollution "Emergency" emission control action programs required by paragraph (A) of this rule shall be made available on the premises to any person authorized to enforce the provisions of the emergency procedure.

(E) Emission control action programs as required by paragraph (A) of this rule shall be submitted to the director upon request within thirty days of the receipt of such request; such emission control action programs shall be subject to review and

approval by the director. If, in the opinion of the director, such emission control action programs do not effectively carry out the objectives as set forth in table 1 to 5 of the appendix to this rule, the director may disapprove said emission control action programs, state the reason for disapproval and order the preparation of amended emission control action programs within the time period specified in the order.

Replaces: 3745-25-03

Effective: 04/18/2009

R.C. 119.032 review dates: 04/18/2014

CERTIFIED ELECTRONICALLY
Certification

04/08/2009
Date

Promulgated Under: 119.03
Statutory Authority: 3704.03(E), 3704.032
Rule Amplifies: 3704.03(A), 3704.03(D), 3704.03(E), 3704.032
Prior Effective Dates: 2/15/72, 12/15/78, 9/3/92

3745-25 (EP-19)
TABLE 1 EMISSION REDUCTION OBJECTIVES FOR PARTICULATE MATTER

SOURCE OF AIR CONTAMINATION	AIR POLLUTION ALERT	AIR POLLUTION WARNING	AIR POLLUTION EMERGENCY
1. Coal or oil fired electric power generating facilities	a. Substantial reduction by utilization of fuels having lowest available ash content.	a. Maximum reduction by utilization of fuels having lowest available ash content.	a. Maximum reduction by utilization of fuels having lowest available ash content.
	b. Maximum utilization of midday (12:00 Noon to 4;00 pm.) atmospheric turbulence for boiler lancing and soot blowing.	b. Maximum utilization of mid-day (12:00 Noon to 4:00 p.m.) atmospheric turbulence for boiler lancing and soot blowing.	b. Maximum utilization of mid-day (12:00 Noon to 4:00 p.m.) atmospheric turbulence for boiler lancing and soot blowing.
	c. Substantial reduction by diverting electric power generation to facilities outside of Alert Area.	c. Maximum reduction by diverting electric power generation to facilities outside of Warning Area.	c. Maximum reduction by diverting electric power generation to facilities outside of Emergency Area.
2. Coal or oil-fired process steam generating facilities.	a. Substantial reduction by utilitization of fuels having lowest available ash content.	a. Maximum reduction by utilization of fuels having lowest available ash content.	a. Maximum reduction by reducing heat and steam demands to absolute necessities consistent with preventing equipment damage.
	b. Maximum utilization of midday (12:00 Noon to 4:00 p.m.) atmospheric turbulence for boiler lancing and soot blowing.	b. Maximum utilization of mid-day (12:00 Noon to 4:00 m.m.) atmospheric turbulence for boiler lancing and soot blowing.	b. Maximum utilization of mid-day (12:00 Noon to 4:00 p.m.) atmospheric turbulence for boiler lancing and soot blowing.
	c. Reduction of steam load demands consistent with continuing plant operations.	c. Reduction of steam load demands consistent with continuing plant operations.	c. Taking the action called for in the emergency plan.
		d. Making ready for use a plan of action to be taken if an emergency develops.	
3. A - Manufacturing, processing, and mining industries. AND B - Other persons required by the Board or prepare standby plans.	a. Substantial reduction of air contaminants from manufacturing operations by curtailing, postponing, or deferring production and allied operations.	a. Maximum reduction of air contaminants from manufacturing operations by, if necessary assuming reasonable economic hardship by postponing production and allied operations.	a. Elimination of air contaminants from manufacturing operations by ceasing, curtailing, postponing or deferring production and allied operations to the extent possible without causing injury to persons or damage to equipment.
	b. Maximum reduction by deferring trade waste disposal operations which emit particles, gases, vapors or malodorous substances.	b. Maximum reduction by deferring trade waste disposal operations which emit particles, gases, vapors or malodorous substances.	b. Elimination of air contaminants from trade waste disposal processes which emit particles, gases, vapors or malodorous substances.
	c. Reduction of heat load demands for processing consistent with continuing plant operations.	c. Reduction of heat load demands for processing consistent with continuing plant operations.	c. Maximum reduction of heat load demands for processing.
4. Refuse disposal operations.	a. Maximum reduction by prevention of open burning.	a. Maximum reduction by prevention of open burning.	a. Maximum reduction by prevention of open burning.
	b. Substantial reduction by limiting burning of refuse in incinerators to the hours between 12:00 Noon and 4:00 p.m.	b. Complete elimination of the use of incinerators.	b. Complete elimination of the use of incinerators.

TABLE 2 EMISSION REDUCTION OBJECTIVES FOR SULFUR OXIDES

SOURCE OF AIR CONTAMINATION	AIR POLLUTION ALERT	AIR POLLUTION WARNING	AIR POLLUTION EMERGENCY
1 Coal or oil-fired electric power generating facilities.	a. Substantial reduction by utilization of fuels having lowest available sulfur content.	a. Maximum reduction by utilization of fuels having lowest available sulfur content.	a. Maximum reduction by utilization of fuels having lowest available sulfur content.
	b. Substantial reduction by diverting electric power generation to facilities outside of Alert Area.	b. Maximum reduction by diverting electric power generation to facilities outside of Warning Area.	b. Maximum reduction by diverting electric power generation to facilities outside of Emergency Area.
2. Coal or oil-fired process steam generating facilities.	a. Substantial reduction by utilization of fuels having lowest available sulfur content.	a. Maximum reduction by utilization of fuels having the lowest available sulfur content.	a. Maximum reduction by reducing heat and steam demands to absolute necessities consistent with preventing equipment damage.
	b. Reduction of steam load demands consistent with continuing plant operations.	b. Reduction of steam load demands consistent with continuing plant operations.	b. Taking the action called for in the emergency plan.
		c. Making ready for use a plan of action to be taken if an emergency develops.	
3. A - Manufacturing and processing industries AND B - Other persons required by the Board to prepare standby plans.	a. Substantial reduction of air contaminants from manufacturing operations by curtailing, postponing, or deferring production and allied operations.	a. Maximum reduction of air contaminants from manufacturing operations by, if necessary, assuming reasonable economic hardship by postponing production and allied operations.	a. Elimination of air contaminants from manufacturing operations by ceasing, curtailing, postponing or deferring production and allied operations to the extent possible without causing injury to persons or damage to equipment.
	b. Maximum reduction by deferring trade waste disposal operations which emit particles, gases, vapors or malodorous substances.	b. Maximum reduction by deferring trade waste disposal operations which emit particles, gases, vapors or malodorous substances.	b. Elimination of air contaminants from trade waste disposal processes which emit particles, gases, vapors or malodorous substances.
	c. Reduction of heat load demands for processing consistent with continuing plant operations.	c. Reduction of heat load demands for processing consistent with continuing plant operations.	c. Maximum reduction of heat load demands for processing.

TABLE 3 EMISSION REDUCTION OBJECTIVES FOR NITROGEN OXIDES

SOURCE OF AIR CONTAMINATION	AIR POLLUTION ALERT	AIR POLLUTION WARNING	AIR POLLUTION EMERGENCY
1. Steam-electric power generating facilities.	a. Substantial reduction by utilization of fuel which results in the formation of less air contaminant.	a. Maximum reduction by utilization of fuel which results in the formation of less air contaminant.	a. Maximum reduction by diverting electric power generation to facilities outside of emergency Area.
	b. Substantial reduction by diverting electric power generation to facilities outside of Alert Area.	b. Maximum reduction by diverting electric power generation facilities outside of Warning Area.	
2. Process steam generating facilities.	a. Substantial reduction by utilization of fuel which results in the formation of less air contaminant.	a. Maximum reduction by utilization of fuel which results in the formation of less air contaminant.	a. Maximum reduction by reducing head and steam demands to absolute necessities consistent with preventing equipment damage.
	b. Reduction of steam load demands consistent with continuing plant operations.	b. Reduction of steam load demands consistent with continuing plant operations.	
		c. Making ready for use a plan of action to be taken if an emergency develops.	
3. A - Manufacturing and processing industries. AND B - Other persons required by the Board to prepare standby plans.	a. Substantial reduction of air contaminants from manufacturing operations by curtailing, postponing, or deferring production and allied operations.	a. Maximum reduction of air contaminants from manufacturing operations by, if necessary, assuming reasonable economic hardship by postponing production and allied operations.	a. Elimination of air contaminants from manufacturing operations by ceasing, curtailing, postponing or deferring production and allied operations to the extent possible without causing injury to persons or damage to equipment.
	b. Maximum reduction by deferring trade waste disposal operations which emit particles, gases, vapors or malodorous substances.	b. Maximum reduction by deferring trade waste disposal operations which emit particles, gases, vapors or malodorous substances.	b. Elimination of air contaminants form trade waste disposal processes which emit particles, gases vapors or malodorous substances.
	c. Reduction of head load demands for processing consistent with continuing plant operations.	c. Reduction of heat load demands for processing consistent with continuing plant operations.	c. Maximum reduction of heat load demands for processing.
4. Stationary internal combustion engines.	a. Reduction of power demands for pumping consistent with continuing operations.	a. Reduction of power demands for pumping consistent with continuing operations	a. Maximum reduction by reducing power demands to absolute necessities consistent with personnel safety and preventing equipment damage
		b. Maximum reduction by utilization of fuels or power source which results in the formation of less air contaminants.	b. Maximum reduction by utilization of fuels or power source which results in the formation of less air contaminants.
5. Refuse disposal operations.	a. Maximum reduction by prevention of open burning.	a. Maximum reduction by prevention of open burning.	a. Maximum reduction by prevention of open burning.
	b. Substantial reduction by limiting burning of refuse in incinerators to the hours between 12:00 Noon and 4:00 p.m.	b. Complete elimination of the use of incinerators.	b. Complete elimination of the use of incinerators.

TABLE 4 EMISSION REDUCTION OBJECTIVES FOR HYDROCARBONS

SOURCE OF AIR CONTAMINATION	AIR POLLUTION ALERT	AIR POLLUTION WARNING	AIR POLLUTION EMERGENCY
1. Petroleum products storage and distribution.	a. Substantial reduction of air contaminants by curtailing, postponing, or deferring transfer operations.	a. Maximum reduction of air contaminants by assuming reasonable economic hardship by postponing transfer operations.	a. Elimination of air contaminants by curtailing, postponing, or deferring transfer operations to the extent possible without causing damage to equipment.
2. Surface coating and preparation.	a. Substantial reduction of air contaminants by curtailing, postponing, or deferring transfer operations.	a. Maximum reduction of air contaminants by assuming reasonable economic hardship by postponing transfer operations.	a. Elimination of air contaminants by curtailing, postponing, or deferring transfer operations to the extent possible without causing damage to equipment.
3. A - Manufacturing and processing industries. AND B - Other persons required by the Board to prepare standby plans.	a. Substantial reduction of air contaminants from manufacturing operations by curtailing, postponing, or deferring production and allied operations.	a. Maximum reduction of air contaminants from operations by, if necessary, assuming reasonable economic hardship by postponing production and allied operations.	a. Elimination of air contaminants from manufacturing operations by ceasing, curtailing, postponing or deferring production and allied operations to the extent possible without causing injury to persons or damage to equipment.

TABLE 5 EMISSION REDUCTION OBJECTIVES FOR CARBON MONOXIDE

SOURCE OF AIR CONTAMINATION	AIR POLLUTION ALERT	AIR POLLUTION WARNING	AIR POLLUTION EMERGENCY
1. A - Manufacturing industries. AND B - Other persons required by the Board to prepare standby plans.	a. Substantial reduction of air contaminants from manufacturing operation by curtailing, postponing, or deferring production allied operation	a. Maximum reduction of air contaminants from operations by, if necessary, assuming reasonable economic hardship by postponing production and allied operations.	a. Elimination of air contaminants from manufacturing operations by ceasing, curtailing, postponing or deferring production and allied operations to the extent possible without causing injury to persons or damage to equipment.
2. Refuse disposal operations	a. Maximum reduction by prevention of open burning.	a. Maximum reduction by prevention of open burning.	a. Maximum reduction by prevention of open burning.

3745-25-05 **Air pollution emergency orders.**

(A) The following orders may be issued by the director upon his/her declaration that an air pollution episode exists for any air contaminants for which air quality standards have been adopted:

(1) Air "Alert":

(a) Any one or combination of air contaminants: Any person responsible for the operation of a source of air contamination as set forth in paragraph (A) of rule 3745-25-04 of the Administrative Code shall take all air pollution "Alert" actions as required for such source of air contamination; and shall particularly put into effect, the emission control action programs for an air pollution "Alert".

(b) Suspended PM10.

(i) There shall be no open burning by any persons of tree waste, vegetation, refuse, or debris in any form.

(ii) The use of incinerators for the disposal of any form of solid waste will be limited to the hours between twelve p.m. and four p.m.

(iii) Persons operating fuel-burning equipment which requires boiler lancing or soot blowing shall perform such operations only between twelve p.m. and four p.m.

(c) Nitrogen oxides, carbon monoxide, hydrocarbons and photo-chemical oxidants measured as ozone:

(i) There shall be no open burning by any persons of tree waste, vegetation, refuse, or debris in any form.

(ii) The use of incinerators for the disposal of any form of solid waste will be limited to the hours between twelve p.m. and four p.m.

(iii) Persons operating motor vehicles shall be strongly encouraged to eliminate the unnecessary use of automobiles, motorcycles, light-duty trucks and vans, and recreational vehicles.

(2) Air pollution "Warning":

(a) Any one or combination of air contaminants: Any person responsible for the operation of a source of air contamination as set forth in paragraph (A) of rule 3745-25-04 of the Administrative Code shall take all air pollution "Warning" actions as required for such source of air contamination; and

shall particularly put into effect, the emission control action programs for an air pollution "Warning".

(b) Suspended PM10:

(i) There shall be no open burning by any persons of tree waste, vegetation, refuse, or debris in any form.

(ii) The use of incinerators for the disposal of any form of solid waste or liquid waste shall be prohibited.

(iii) Persons operating fuel-burning equipment which requires boiler lancing or soot blowing shall perform such operations only between the hours of twelve p.m. and four p.m.

(c) Nitrogen oxides, carbon monoxide, hydrocarbons and photo-chemical oxidants measured as ozone:

(i) There shall be no open burning by any persons of tree waste, vegetation, refuse, or debris in any form.

(ii) The use of incinerators for the disposal of any form of solid waste or liquid waste shall be prohibited.

(iii) Persons operating motor vehicles shall be strongly encouraged to eliminate the unnecessary use of automobiles, motorcycles, light-duty trucks and vans, and recreational vehicles. Citizens who travel to and from work between the hours of six a.m. and six p.m. are urged to car-pool or utilize public transportation.

(iv) For carbon monoxide "Warnings", persons operating motor vehicles shall be encouraged to avoid the air pollution "Warning" area.

(3) Air pollution "Emergency":

(a) Any one or a combination of contaminants:

(i) Any person responsible for the operation of a source of air contamination as described in paragraph (A) of rule 3745-25-04 of the Administrative Code shall take all air pollution "Emergency" actions as listed as required for such source of air contamination; and shall particularly put into effect the emission control action programs for an air pollution "Emergency".

(ii) All manufacturing establishments except those included in paragraph (A)(3)(a)(i) of this rule shall institute such action as will result in maximum reduction or air contaminants from their operations by ceasing, curtailing, or postponing operations which emit air

contaminants to the extent possible without causing injury to persons or damage to equipment.

(iii) All places of employment described below shall immediately cease operations:

(a) Mining and quarrying of non-metallic minerals.

(b) All contract construction work except that which must proceed to avoid physical harm.

(c) Wholesale trade establishments, including places of business primarily engaged in selling merchandise to retailers, to industrial, commercial, institutional or professional users, or to other wholesalers, or acting as agents in buying merchandise for or selling merchandise to such persons or companies.

(d) All offices of local, county, and state government including authorities, joint meetings, and other public bodies; except to the extent that such offices must continue to operate in order to enforce the requirements of this order pursuant to statute.

(e) All retail trade establishments except pharmacies and stores primarily engaged in the sale of food.

(f) Banks; credit agencies other than banks; securities and commodities brokers, dealers, exchanges and services; offices of insurance carriers, agents and brokers; real estate offices.

(g) Wholesale and retail laundries; laundry services and cleaning and dyeing establishments; photographic studios; beauty shops, barber shops, shoe repair shops.

(h) Advertising offices; consumer credit reporting, adjustment and collection agencies; duplicating, addressing, blueprinting; photocopying, mailing, mailing list and stenographic services; equipment rental services; commercial testing laboratories.

(i) Automobile repair, automobile services, garages.

(j) Establishments rendering amusement and recreation services including motion picture theatres.

(k) Elementary and secondary schools, colleges, universities, professional schools, junior colleges, vocational schools, and public and private libraries.

(iv) There shall be no open burning by any person of tree waste, vegetation, refuse, or debris in any form.

(v) The use of incinerators for the disposal of any form of solid or liquid waste shall be prohibited.

(vi) The use of motor vehicles; including, but not limited to automobiles, motorcycles, light-duty trucks and vans, and recreational vehicles; shall be prohibited except in emergencies with the approval of local or state police.

(B) When the director determines that an air pollution episode condition exists at one or more monitoring sites solely because of emissions from a limited number of sources, the director may order such source or sources to put into effect the emission control action programs which are applicable for each episode stage.

Replaces: 3745-25-04

Effective: 04/18/2009

R.C. 119.032 review dates: 04/18/2014

CERTIFIED ELECTRONICALLY
Certification

04/08/2009
Date

Promulgated Under: 119.03
Statutory Authority: 3704.03(E), 3704.032
Rule Amplifies: 3704.03(A), 3704.03(D), 3704.03(E), 3704.032
Prior Effective Dates: 2/15/72, 12/15/78, 9/3/92

Chapter 3745-26: I/M Program Rules and Regulations

Contact: Michael Riggleman 614-644-3590
Michael.riggleman@epa.ohio.gov

3745-26-01 **Definitions.**

[Comment: For dates and availability of non-regulatory government publications, publications of recognized organizations and associations, federal rules, and federal statutory provisions referenced in this rule, see paragraph (MM) of this rule titled "referenced materials."]

(A) "Approved technician trainer" means an individual who is certified as an automotive service excellence (ASE) master technician, has at least ten years of experience in the automotive industry and is approved by the director or the director's designee to instruct technician training.

(B) "Certified inspector" means an individual who has attended a required training course, successfully passed a written examination approved by Ohio EPA and certified by the director to inspect motor vehicles subject to this chapter.

(C) "Certified repair facility" means a site, a building, structure, mobile operation, or combination thereof used by a person, business, firm, corporation, or governmental entity certified by the director in compliance with rule 3745-26-15 of the Administrative Code to conduct emission related repairs to gasoline and diesel fueled vehicles for a repair waiver. The purpose of certifying a facilty is to acknowledge to the public that the facility is certified and qualified to conduct emissions related repairs and not that the facility is exclusive to make these repairs.

(D) "Certified waiver repair technician" means an individual who has attended and completed required training, successfully passed a required examination and has been certified by the director in compliance with rule 3745-26-16 of the Administrative Code to complete emission related repairs subject to this chapter.

(E) "Compliance" or "comply" means a vehicle has passed all aspects and parameters of the anti-tampering enhanced vehicle inspection and maintenance program, which is required under this chapter. A compliance certificate will be issued to the owner or lessee whose vehicle has successfully passed the inspection.

(F) "Contractor" means the entity selected through competitive bidding procedures or through a request for proposal to provide services to the Ohio environmental protection agency for operation of the enhanced inspection and maintenance program. This contractor shall, in part, operate, manage or oversee a system of inspection stations operated by the contractor and subcontractor for the enhanced inspection and maintenance program.

(G) "Designated program area" includes any county currently or formerly classified as moderate, serious, severe or extreme nonattainment for carbon monoxide or ozone in accordance with the Clean Air Act and that is subject to an enhanced vehicle inspection and maintenance program.

(H) "Director" means the director of the Ohio environmental protection agency or the director's authorized representative.

(I) "Engine exchange" means any motor vehicle having an engine block installed that differs from the original manufacturer's specification certified as meeting United States environmental protection agency certification requirements.

(J) "Enhanced" means the vehicle inspection program described in this chapter.

(K) "Exemption certificate" means the official certificate, issued by the director, to a vehicle owner or lessee whose vehicle may not require inspection as prescribed in rule 3745-26-12 of the Administrative Code or as determined by the director. An exemption certificate shall serve the same purpose as the certificate to be presented to the registrar of motor vehicles as required by section 4503.10 of the Revised Code.

(L) "Extension certificate" means an official certificate issued by the director to a motor vehicle owner or lessee for emergency or other purposes deemed by the director to warrant an extension of the time to complete the vehicle emissions test of that motor vehicle. An extension certificate shall serve the same purpose as the certificate to be presented to the registrar of motor vehicles as required by section 4503.10 of the Revised Code.

(M) "Foreign imported gray market vehicle" means any vehicle of a type required to be registered that is brought into this state from another country other than in the ordinary course of business by or through a manufacturer or dealer as defined in division (W) of section 4501.01 of the Revised Code.

(N) "Government vehicle" means any vehicle as defined in section 4503.16 of the Revised Code.

(O) "Gross vehicle weight rating" means weight of vehicle plus the load the vehicle is capable of carrying as stated on the manufacturer's door plate.

(P) "Inspection certificate" means the portion of the vehicle inspection report that is issued to each vehicle owner or lessee at the time of an inspection. An inspection certificate indicating compliance is to be presented to the registrar as required by division (B) of section 4503.10 of the Revised Code.

(Q) "Inspection Procedures Manual" or "manual" means the book containing the most recent official document approved by the director detailing the guidelines and repair requirements to be used in the anti-tampering or tailpipe emissions inspection. Each inspection station shall keep an updated manual on the premises at all times.

(R) "Inspection station" means any station or facility, leased or owned, and operated by the contractor or subcontractor approved by the director to conduct anti-tampering inspections and emission inspections of motor vehicles and authorized to issue an inspection certificate or any other program related certificates.

(S) "Lessee" means any person not having title to a motor vehicle, but granted legal authority by the title holder to possess the vehicle.

(T) "Low income" means household income, during the past twelve month period, of not more than one hundred fifty per cent of the latest available poverty threshold level established by the U.S. department of health and human services, for the forty-eight contiguous states.

(U) "Motor vehicle" or "vehicle" has the meaning as defined in division (B) of section 4501.01 of the Revised Code.

(V) "Multi-fueled vehicle" means any vehicle originally manufactured, designed, or converted from its original manufacturer's specification to utilize more than one fuel type, one of which is gasoline.

(W) "Nonattainment area" means an area that has not achieved the national ambient air quality standards and that is required to undergo certain air pollution control strategies pursuant to the Clean Air Act.

(X) "Ohio E Check" is the enhanced motor vehicle inspection and maintenance program designated and implemented in accordance with section 3704.14 of the Revised Code in the counties that are necessary and federally mandated for the state to comply with the Clean Air Act.

(Y) "Opt-in enhanced" means an enhanced vehicle inspection and maintenance program selected by a moderate ozone or carbon monoxide nonattainment area as described in rules 3745-26-10, 3745-26-12, 3745-26-13 and 3745-26-14 of the Administrative Code.

(Z) "Owner" means any person other than a manufacturer or dealer having title to a motor vehicle.

(AA) "Person" means the state, any political subdivision, public or private corporation, partnership, firm, association, individual, organization or other entity.

(BB) "Queuing area" means the space allocated in each lane at each inspection station where vehicles wait for testing.

(CC) "Repair facility" means a site, a building, structure, mobile operation or combination thereof used by a person, business, corporation, or government entity to conduct, as a business with a vendors license, or corporation, or government maintenance operation, emission related repairs to gasoline and diesel fueled vehicles for a repair waiver. The director reserves the right to take into consideration other additional factors in the application of this paragraph.

(DD) "Repair waiver" means obtaining a repair waiver certificate in accordance with rule 3745-26-12 of the Administrative Code in lieu of passing an emissions test in order to meet compliance with the appropriate model year emission standards. A repair waiver is valid for the period of time specified in paragraph (E)(3) of rule 3745-26-12 of the Administrative Code.

(EE) "Repair waiver certificate" means the official certificate issued to a vehicle owner or lessee whose vehicle has not met compliance with the emissions

standards but has met all requirements for a waiver as prescribed in rule 3745-26-12 of the Administrative Code. A waiver certificate shall serve the same purpose as the compliance certificate to be presented to the registrar of motor vehicles as required by section 4503.10 of the Revised Code.

(FF) "Rural" means an area that does not have defined boundaries, is more sparsely populated or consists of low population density, usually used for mostly farming and agriculture.

(GG) "Subcontractor" means a person or business that contracts with the contractor to provide vehicle emissions testing or other services necessary for the performance of the vehicle inspection and maintenance program or vehicle emissions testing program.

(HH) "Test center" means any inspection station operated by a contractor where emission inspections and reinspections are performed.

(II) "Urban" means a metro statistical area that has a defined boundary and is characterized as having a high population density similar to that of a city, town or municipality, or a region consisting of several metropolitan areas having contiguous boundaries.

(JJ) "Vehicle identification number" or "VIN" means the manufacturer's original serial number affixed to or imprinted upon the chassis or other part of the motor vehicle.

(KK) "Vehicle inspection report" or "VIR" means the official inspection form narrative presented to each vehicle owner or lessee at the time of an inspection. It indicates levels of hydrocarbons, carbon monoxide and nitrous oxides detected from the tailpipe emissions test, or the diagnostic trouble codes from the on board diagnotic test, an anti-tampering inspection and indicates whether the vehicle has passed or failed the different sections of the inspection. The vehicle inspection report contains a detachable inspection certificate that is to be presented to the registrar of motor vehicles as required by division (B) of section 4503.10 of the Revised Code.

(LL) "Waiver limit" means the minimum dollar amount required to be spent for motor vehicle emission related repair and diagnostic fees, by each owner or lessee whose vehicle fails the enhanced test in order for said owner or lessee to be eligible for a repair waiver as prescribed in paragraphs (E)(1) and (E)(2) of rule 3745-26-12 of the Administrative Code. For any vehicle registered in a county that is subject to an enhanced inspection program, "waiver limit" means at least two hundred dollars for a 1995 vehicle or earlier model year or three hundred dollars for a 1996 vehicle or more recent model year, except that for any county classified as serious, severe, or extreme nonattainment that is subject to an enhanced vehicle inspection and maintenance program, "waiver limit" means more than four hundred fifty dollars for any vehicle.

(MM) Referenced materials. This chapter includes references to certain subject matter or materials. The text of the referenced materials is not included in the rules

contained in this chapter. Information on the availability of the referenced materials as well as the date of and the particular edition or version of the material is included in this rule. For materials subject to change, only the specific version specified in this rule are incorporated or referenced. Material is referenced as it exists on the effective date of this rule. Except for subsequent annual publication of existing (unmodified) Code of Federal Regulation compilations, any amendment or revision to a referenced document is not referenced unless and until this rule has been amended to specify the new dates.

(1) Availability. The referenced materials are available as follows:

(a) ASE, the national institute for automotive service excellence. Information can be obtained by writng to: "ASE, 101 Blue Seal Drive, S.E. Suite 101 Leesburg, VA 20175." Information can also be obtained by calling 1-703-669-6600 or in electronic format at: www.ase.com.

(b) Clean Air Act. Information and copies may be obtained by writing to: "Superintendent of Documents, Attn: New Orders, PO Box 371954, Pittsburgh, PA 15250-7954." The full text of the act is also available in electronic format at www.epa.gov/oar/caa/text.html. A copy of the act is also available for inspection and use at most public libraries and "The State Library of Ohio."

(c) Code of Federal Regulations (CFR). Information and copies may be obtained by writing to: "Superintendent of Documents, Attn: New Orders, PO Box 371954, Pittsburgh, PA 15250-7954." The full text of the CFR is also available in electronic format at http://www.ecfr.gov. The CFR compilations are also available for inspection and use at most public libraries and "The State Library of Ohio."

(2) Referenced materials:

(a) 40 CFR Part 51; "Requirements for preparation, adoption, and submittal of implementation plans;" as published in the July 1, 2014 Code of Federal Regulations.

(b) 40 CFR 51.356; "Vehicle coverage;" as published in the July 1, 2014 Code of Federal Regulations.

(c) 40 CFR 51.359; "Quality control;" as published in the July 1, 2014 Code of Federal Regulations.

(d) 40 CFR 51.363; "Quality assurance;" as published in the July 1, 2014 Code of Federal Regulations.

(e) 40 CFR 51.367; "Inspector training and licensing or certification;" as published in the July 1, 2014 Code of Federal Regulations.

(f) 40 CFR 85, Subpart V; "Emissions Control System Performance Warranty Regulations and Voluntary Aftermarket Part Certification Program;" as published in the July 1, 2014 Code of Federal Regulations.

(g) Clean Air Act; 42 USC 7401 to 7671q; "The Public Health and Welfare-Air Pollution Prevention and Control;" published January 2, 2006 in Supplement V of the 2000 edition of the United States Code; as amended December 19, 2007, Pub. L. 110-140, sec 201, 202, 203(f), 204, 208, 209, 210(a), 210(b), 210(c), 247, and 251, 121 Stat. 1519, 1521, 1529, 1531, 1532, 1547, and 1548.

(h) Section 207 (B) of the Clean Air Act as contained in 42 USC section 7451; "Compliance by vehicles and engines in actual use;" published January 2, 2006 in Supplement V of the 2000 edition of the United States Code.

Effective: 02/12/2015

Five Year Review (FYR) Dates: 11/28/2014 and 02/12/2020

CERTIFIED ELECTRONICALLY
Certification

02/02/2015
Date

Promulgated Under: 119.03
Statutory Authority: 3704.14
Rule Amplifies: 3704.14
Prior Effective Dates: 7/17/87, 4/21/89, 5/15/90, 6/13/94, 12/29/95, 8/15/96

3745-26-10 **Requirements for contractors in the enhanced automobile inspection and maintenance program.**

[Comment: For dates and availability of non-regulatory government publications, publications of recognized organizations and associations, federal rules, and federal statutory provisions referenced in this rule, see paragraph (MM) of rule 3745-26-01 of the Administrative Code titled "referenced materials."]

(A) The motor vehicle inspections conducted under the enhanced tailpipe emissions inspection program required under section 3704.14 of the Revised Code shall be conducted by one or more private contractors.

(B) The contract shall be awarded by the director of administrative services and the contractor shall comply with all aspects of the bid contract as awarded. A contractor may subcontract testing or other services with a person or business, in accordance with the terms of the contract, provided the contractor and subcontractor comply with the contract and this chapter, as applicable.

(C) The contractor shall construct, maintain and operate computerized, high volume on board diagnostics inspection stations and tailpipe emission inspection stations, except where the director determines that the tailpipe emission inspections are no longer necessary, in a designated program area for the purpose of inspecting vehicles as required under section 3704.14 of the Revised Code. These contractor run vehicle emissions inspection stations shall meet, but not be limited to the following requirements:

(1) Eighty per cent of the population that is subject to section 3704.14 of the Revised Code shall be no more than five miles from an emission inspection station and that one hundred per cent of that population be no more than ten miles from an emissions inspection station. In rural areas, one hundred per cent of that population shall be no more than fifteen miles from an inspection station.

(2) A majority of the stations shall be in operation for no fewer than forty-five hours per week, which shall include, without limitation, operating hours in the evening and on Saturdays.

(3) The amount of time a vehicle must wait within the confines of the queuing area shall not exceed a daily average of fifteen minutes.

(D) The contractor or any of the contractor's employees are prohibited from having principal interest in a company that is in the business of vehicle repair or service, in vehicle parts sales, or in motor vehicle sales or leasing.

(E) The contractor shall not refer vehicle owners to any particular vehicle repair service provider.

(F) The contractor shall provide emission inspection data analyses and furnish to the director summary reports on a weekly, monthly, quarterly, and yearly basis and special reports as requested by the director to carry out the requirements of section 3704.14 of the Revised Code.

(G) The director may conduct periodic announced and unannounced audits of testing facilities to ensure that the contractor continues to meet this chapter and the provisions of section 3704.14 of the Revised Code and 40 CFR part 51.

(H) Each contractor shall be responsible for the upkeep, distribution and replacement of all vehicle inspection reports and other documents necessary or convenient to the program.

(I) Each VIR shall contain the following statement: "This automobile inspection is the result of requirements under the Clean Air Act as enacted by the United States Congress and enforced by U.S. EPA. Any questions or comments on the need of the testing program can be directed to U.S. EPA at Environmental Protection Agency, Ariel Rios Building, Office of Transportation and Air Quality, 1200 Pennsylvania Ave. NW, Washington, D.C. 20460. http://www.epa.gov/epahome/comments.htm."

(J) Each contractor or subcontractor shall be responsible for complying with equipment requirements and procedures established in 40 CFR Part 51.

Effective: 02/12/2015

Five Year Review (FYR) Dates: 11/28/2014 and 02/12/2020

CERTIFIED ELECTRONICALLY
Certification

02/02/2015
Date

Promulgated Under: 119.03
Statutory Authority: 3704.14
Rule Amplifies: 3704.14
Prior Effective Dates: 5/15/90, 6/13/94

3745-26-12 **Requirements for motor vehicle owners in the enhanced automobile inspection and maintenance program.**

[Comment: For dates and availability of non-regulatory government publications, publications of recognized organizations and associations, federal rules, and federal statutory provisions referenced in this rule, see paragraph (MM) of rule 3745-26-01 of the Administrative Code titled "referenced materials."]

(A) Motor vehicles subject to inspection.

(1) Beginning January 1, 1996, the director shall implement and supervise an enhanced vehicle inspection and maintenance program in the counties that are necessary for the state to effectively comply with the Clean Air Act.

(2) Unless otherwise exempt pursuant to division (B)(3) of section 3704.14 of the Revised Code, each twenty-five year-old or more recent motor vehicle whose owner or lessee resides in a county that is part of a designated program area, and each twenty-five year-old or more recent motor vehicle that is part of a fleet operated in a county that is part of a designated program area, is subject to biennial inspection for the enhanced program.

Unless otherwise exempt pursuant to division (B)(3) of section 3704.14 of the Revised Code, each motor vehicle that is owned or leased by the state, local government, or any political subdivision whose office is located within a county that is part of a designated program area, is subject to inspection in odd numbered years and shall report the inspection results to the director by December thirty-first of that year.

Pursuant to 40 CFR part 51.356, unless otherwise exempt pursuant to division (B)(3) of section 3704.14 of the Revised Code, each motor vehicle that is owned or leased by the federal government or its employees and is operated on a federal installation within a county that is part of a designated program area is subject to inspection. Vehicles owned or leased by the federal government will be required to have an inspection in odd numbered years and shall report the inspection results to the director by December thirty-first of that year.

(a) The county of residence of a motor vehicle owner is determined by the resident's or owner's address provided on the registration issued by the registrar of motor vehicles.

(b) A lessee's county of residence is determined by the resident's address listed on the lease agreement.

(c) Federal installations located in a designated program area shall provide documentation of proof of compliance with test requirements to the director of Ohio EPA. Documentation shall include a list of subject vehicles and be updated biennially.

(3) With the exception of when vehicles are exempt from testing, vehicle owners shall comply with the following test frequency in a designated program area:

(a) A vehicle owner or lessee whose vehicle is an odd number model year is required to present a valid inspection certificate upon vehicle registration in odd numbered calendar years.

(b) A vehicle owner or lessee whose vehicle is an even number model year is required to present a valid inspection certificate upon vehicle registration in even numbered calendar years.

(4) A vehicle owner or lessee may have a vehicle inspected in any county in Ohio where the approved test is being offered. .

(5) At the time of vehicle registration or registration renewal, the motor vehicle owner or lessee shall present to the registrar of motor vehicles an inspection compliance certificate, an exemption certificate, extension certificate, or a waiver certificate with an application for vehicle registration as determined under section 4503.10 of the Revised Code.

(6) With the exception of when vehicles are exempt from testing, vehicles that have been transferred to a new owner or lessee or those issued a thirty-day temporary tag as defined in section 4503.182 of the Revised Code shall have an emissions inspection performed unless a valid compliance certificate from the previous owner is transferred to the new owner or a duplicate certificate as prescribed in paragraph (D)(10) of this rule is obtained. Repair waivers and all types of exemption and extension certificates are not transferrable.

(7) Foreign imported gray-market vehicles that have been issued documents of exemption from emission requirements by the United States environmental protection agency are not exempt from testing in Ohio.

(8) Vehicles subject to inspection that have been rebuilt or that have had engine exchanges shall meet inspection requirements for the model year of the motor vehicle chassis.

(9) For a kit car or self-assembled car whose engine year can be confirmed by the director or the director's designee, the vehicle will be tested based on the standards for the confirmed engine year. If the engine year cannot be confirmed, the motor vehicle will be tested on the standard for the year the vehicle was titled.

(10) A passing vehicle inspection report issued to a motor vehicle owner or lessee is valid for three hundred sixty-five days from the date of the inspection and can be transferred to a subsequent owner or lessee of that vehicle.

(11) All vehicle inspection reports shall contain the following statement: "This automobile inspection is a result of requirements under the Clean Air Act as enacted by the United States Congress and enforced by U.S. EPA. Any

questions or concerns on the need of the testing program can be directed to U.S. EPA at Environmental Protection Agency, Ariel Rios Building, Office of Transportation and Air Quality, 1200 Pensylvania Ave. NW, Washington, D.C. 20460. http://www.epa.gov/epahome/comments.htm."

(B) Non-permanent exemptions and extensions.

(1) Pursuant to division (B)(3) of section 3704.14 of the Revised Code, new vehicles are exempt from the inspection requirements for four years in the enhanced program. New vehicle exemptions commence beginning with the first model year of the vehicle and expire at the end of the fourth year, for example, a 2011 model year's exemption expires December 31, 2014. An exemption certificate is not required for owners of new vehicles.

(2) Consistent with the intent of these rules, the director may grant exemptions for or extensions of the time during which any motor vehicle required to be tested pursuant to section 3704.14 of the Revised Code and the rules adopted thereunder is exempt from testing, if circumstances indicate such an exemption or extension is warranted.

(3) Any application for a non-permanent exemption or extension shall be submitted on a form prescribed by the director. Copies of this form may be obtained free of charge from the Ohio environmental protection agency, from the bureau of motor vehicles, from any test center, or from the website www.ohioecheck.org.

(4) Any owner or lessee receiving a non-permanent exemption or extension shall comply with any terms and conditions specified by the director on the extension certificate. If the recipient of an extension certificate fails to comply with the terms and conditions, that owner or lessee shall not be eligible for future exemptions or extensions.

(5) Extensions shall be issued at the discretion of the director, for the purpose of allowing for a delay in the testing requirement for a period of up to six months. The following are the types of extensions and the requirements and documentation necessary to qualify for an extension:

(a) A repair extension may be granted for a motor vehicle that is undergoing repair at the time of the registration or registration renewal. In addition to the application, an extension request based upon repair shall include a copy of the repair order or parts order, or both when available, from the facility performing the repairs, and a copy of the current vehicle registration.

(b) An out of state extension may be granted for a motor vehicle that is located in another state provided law enforcement verifies the vehicle location as requested in the application or by another verification method approved by the director on a case-by-case basis.

(c) A readiness extension may be granted for a motor vehicle that is having readiness issues related to testing. The documentation shall include a failed inspection report or customer notice indicating not able to test due to readiness.

(d) A hardship extension for any motor vehicle may be granted to a motor vehicle owner or lessee that meets the following criteria:

(i) The motor vehicle fails any part of the emission test, except the gas cap test.

(ii) The motor vehicle owner or lessee completes and submits an application for a hardship extension.

(iii) The applicant certifies that the applicant's income qualifies as "low income," as defined in rule 3745-26-01 of the Administrative Code.

(iv) The motor vehicle owner or lessee provides a written estimate of seventy-five dollars or more for vehicle emission repairs, parts or services, including diagnostic fees, related to the failure. If a motor vehicle owner or lessee intends to perform the necessary services or repairs themself, the written estimate shall include only the cost of emission related parts. The written estimate shall not include any costs associated with any motor vehicle emission related recall that has been or is to be paid by a manufacturer or dealer.

(e) A director's discretionary extension may be granted as the director determines is necessary and appropriate for very unique circumstances not addressed in this paragraph.

(6) A non-permanent exemption for a motor vehicle may be issued if one of the following criteria is met by the owner or lessee:

(a) For motor vehicles owned or operated by military personnel stationed outside Ohio.

If a motor vehicle is registered in an Ohio designated program area, but is owned or operated by a member of the armed forces who is stationed outside Ohio, the application for non-permanent exemption shall include a copy of that person's current military orders, a copy of the vehicle registration and a completed exemption application.

(b) For motor vehicles owned or operated by students attending schools outside the state of Ohio that are not within another state's designated program area.

If a motor vehicle registered in an Ohio designated program area is owned or operated by a person attending school outside the state of Ohio but which is not in another state's designated program area, the

application for non-permanent exemption shall include a statement from the registrar of the school attesting to the student's registration and the effective dates of that registration, a copy of the vehicle registration and a completed exemption application.

(c) For motor vehicles operated outside Ohio in another state's designated program area but not operated by a person eligible for a military or student exemption.

If a motor vehicle registered in an Ohio designated program area is owned or operated by a person in another state's designated program area, the application for non-permanent exemption shall include a valid compliance certificate from the motor vehicle inspection program in that area, a copy of the vehicle registration and a completed exemption application.

(C) Permanent exemptions.

Effective January 1, 1996 the following motor vehicles are permanently exempt from the emissions inspection required in the designated program area:

(1) Vehicles that are older than twenty-five years, as determined by vehicle model year.

(2) Noncommercial vehicles with gross vehicle weight ratings of more than ten thousand pounds after a one time visual verification and inspection by an Ohio EPA representative.

(3) Historical vehicles registered under section 4503.181 of the Revised Code. Owners of historical vehicles are not required to obtain exemption certificates.

(4) Collector's vehicles registered under section 4501.01 of the Revised Code. Owners of collector's vehicles are not required to obtain exemption certificates.

(5) Parade and exhibition vehicles registered under section 4503.18 of the Revised Code. Owners of parade and exhibition vehicles are not required to obtain exemption certificates.

(6) Motorcycles as defined in section 4511.01 of the Revised Code. Owners of motorcycles are not required to obtain exemption certificates.

(7) Vehicles, the district of registration of which is located in a designated program area, that are leased to a lessee whose county taxing district code, as designated on the vehicle registration, is outside a designated program area. The lessees of such vehicles are not required to obtain exemption certificates as long as the lessee's county taxing district remains outside a designated program area.

(8) Vehicles for which salvage certificates of title have been issued under division (C) of section 4505.11 of the Revised Code. Owners or lessees of salvaged vehicles are not required to obtain exemption certificates.

(9) Recreational vehicles and motor homes as defined in section 4501.01 of the Revised Code. Owners or lessees of recreational vehicles and motor homes are not required to obtain exemption certificates.

(10) Electrically-powered vehicles shall receive a one-time verification inspection prior to receiving an exemption certificate.

(11) Vehicles operating on an alternative fuel such as primarily one hundred per cent propane, butane, alcohol or natural gas. Experimental vehicles and vehicles operating on other alternative fuels may be exempted at the director's discretion. Such vehicles shall have a one-time verification inspection performed on the vehicle prior to receiving an exemption certificate.

(D) Inspection procedures and repair requirements.

(1) All inspections shall be performed at a designated and approved inspection station. If required, the vehicle owner or lessee shall present the vehicle registration, an application for registration renewal, a vehicle registration expiration notice, or the vehicle title, or copy thereof, at the time of inspection so as to verify the vehicle identification number and that the vehicle is registered in a testing county or the owner or lessee resides in a testing county.

(2) Vehicles shall receive a visual check. Vehicles found to be in an unsafe condition will not receive an emissions test but will be issued a rejection report indicating items that need to be repaired. This rejection does not count as a failure for purposes of paragraph (F) of this rule. Any vehicle may be rejected for one or more of the following conditions:

(a) Fuel, engine oil, coolant or transmission oil leaks in or around engine, fuel tank or lines causing a visible pooling of fluid onto floor.

(b) For tailpipe testing only.

(i) Under-inflated tires, emergency spare tires, or tires in an unsafe condition.

(ii) Loud internal engine noise, obvious exhaust leaks, or a missing tailpipe.

(3) A vehicle known to be on an emission related recall or that has an unresolved emission related recall repair will not be inspected until the recall repair is completed and documented with proof of the work performed. After such proof has been presented, an emission test may be performed on the vehicle.

Recall repair costs, whether borne by the manufacturer or dealer shall not be counted toward a waiver.

(4) Any vehicle subject to this rule shall have a tampering inspection to ensure that the vehicle contains the emissions control equipment and that the equipment properly operates. Vehicles that are missing a gas cap, when required, will fail the gas cap test and vehicle inspection.

Each tampering inspection will be performed on the basis of the vehicle's original emission control system configuration at the time of manufacture, or on a U.S. EPA certified emission control configuration for an engine of the same or newer model year and weight class of that of the vehicle. After market replacement parts and add-on and modified parts meeting the performance criteria specified in 40 CFR part 85, subpart V, or meeting the requirements of the U.S. EPA memorandum 1A policy document, or which have not otherwise been found in violation of the anti-tampering provisions of the Clean Air Act as amended are considered to be in compliance with this chapter.

Vehicles that fail the tampering inspection will be considered to have failed the emissions test and will be issued a vehicle inspection report indicating the failure items. The owner or lessee shall have the vehicle repaired to pass the initial tampering test.

(5) If a vehicle passes the tampering inspection, model year 1995 and older gasoline vehicles will receive an emissions inspection to ensure the concentration of hydrocarbons, nitrous oxides and carbon monoxide meet applicable standards for the model year. For model year 1996 ond older diesel-powered vehicles, the emissions inspection will test for exhaust opacity. Maximum allowable emission standards shall be determined by the director. Gasoline vehicles model year 1996 and newer and diesel fueled vehicles model year 1997 and newer that are required to be tested shall pass an on board diagnostic test, unless an alternative test is determined to be required.

(6) If the vehicle passes the required emissions inspection, the contractor shall provide the owner or lessee with a vehicle inspection report that includes a compliance certificate.

If a vehicle fails the required emissions inspection, the contractor shall provide the owner or lessee with a vehicle inspection report and certificate indicating which items failed the inspection. This report shall list possible components that may need to be replaced or the systems to be repaired.

(7) Upon receipt of the vehicle inspection report indicating failure, the owner or lessee shall do the following:

(a) Have emissions related repairs performed on the vehicle.

(b) Have the necessary repairs performed so that the vehicle can pass a subsequent reinspection. Only new original or new aftermarket catalytic converters or recertified used catalytic converters meeting the emission reduction requirements and criteria set by the United States environmental protection agency are acceptable for catalytic converter replacement required under this chapter.

(c) Have the vehicle reinspected after the required repairs have been performed.

(8) Any vehicle owner or lessee may perform repairs necessary to prepare the vehicle for reinspection, however, only actual costs of emissions related parts, not labor costs, incurred by an owner or lessee in performing self repairs upon vehicles shall be applied towards a waiver.

(9) If a motor vehicle failing the enhanced test is covered by a valid and unexpired emission performance warranty as provided under section 207 (B) of the Clean Air Act the vehicle owner or lessee shall have any repairs necessary for the vehicle to pass inspection performed on the vehicle under that warranty. Such a vehicle is not eligible for a waiver under this rule. Costs incurred under warranty repairs shall not be applied towards a waiver.

(10) If a vehicle owner or lessee loses an inspection certificate and a valid vehicle inspection identification number does not appear on the bureau of motor vehicles' registration data file, the vehicle owner or lessee may obtain a duplicate certificate from a designated test facility.

(11) Emissions inspections shall incorporate the on-board diagnostic computer link feature mandated by the Clean Air Act when the feature is available.

(E) Waivers.

(1) To qualify for a waiver certificate, a motor vehicle owner or lessee shall provide all of the following:

(a) The most recent VIR. Emission related repairs performed prior to the vehicle's initial inspection can be included in calculating whether the vehicle owner or lessee has met the "waiver limit"as provided in paragraph (E)(2) of this rule, if the repairs were performed within sixty days of that initial inspection.

(b) Emission-related repair receipts including itemized costs from a repair facility, or costs of parts if repairs are performed by an owner or lessee, to bring the vehicle into compliance with the required emission inspection. This amount shall not include the cost of repairing or replacing tampered emissions control equipment, and shall include only the cost of parts if the repairs are performed by the vehicle owner or lessee themself.

For a vehicle registered in a county subject to the enhanced inspection program, the motor vehicle owner or lessee shall satisfy paragraphs (E)(2) and (E)(3) of this rule.

(2) The vehicle owner or lessee shall demonstrate that an amount equal to or greater than the "waiver limit" as defined in rule 3745-26-01 of the Administrative Code has been spent on emission-related repairs and diagnostic fees. This amount shall not include the cost of repairing or replacing tampered emissions control equipment and shall include only the cost of parts if the repairs are performed by the vehicle owner or lessee themself. If the vehicle owner or lessee demonstrates that the "waiver limit" has been spent, the vehicle shall be inspected and the documentation reviewed to establish the following:

(a) For all vehicles, the motor vehicle shows no sign of tampering with the emission control equipment.

(b) For gasoline vehicles model year 1995 and older or all vehicles that are tailpipe tested, reinspection results subsequent to emission-related repairs and adjustments indicate not less than a thirty per cent reduction in the measured concentrations of each pollutant that exceeded the applicable standard for that pollutant during the initial inspection. Also, the reinspection results for each pollutant that passed during the initial inspection shall not exceed the standard for that pollutant after emission-related repairs and adjustments.

(c) For all vehicles attempting to qualify for a repair waiver and to the extent possible, the repair waiver inspection will verify the emission-related repairs or replaced parts were made to that vehicle and as itemized on the repair receipt.

(3) A waiver certificate shall be valid for three hundred sixty-five days from its date of issuance or until the next required vehicle emission test. A waiver is not transferrable to a subsequent owner or lessee.

(F) Test fees.

(1) The contractor shall refund the inspection costs for one pass per vehicle incurred by a motor vehicle dealer. These refunds shall apply to vehicles that become registered in a county that is subject to the motor vehicle inspection and maintenance program.

(2) The contractor shall provide for one free passing emissions inspection or a total of three emissions inspections for a motor vehicle in any three-hundred-sixty-five day period. The owner or lessee of a motor vehicle is responsible for inspection fees that are related to emission inspections beyond one free passing emissions inspection or three total emission inspections in any three-hundred-sixty-five day period. Inspection fees that are charged by a

contractor conducting emission inspections under a motor vehicle inspection and maintenance program shall be appproved by the director.

(G) Appeal procedures.

A motor vehicle owner or lessee may appeal the results of an emissions inspection if the owner or lessee believes the inspection was not administered according to rules or procedures of this chapter. The owner or lessee may appeal the inspection results to the director within fourteen days of failing an emissions inspection.

(1) Upon notice of request for an appeal, the director shall contact the owner or lessee and will reinspect the vehicle at a place and time of the director's convenience.

(2) The director's determination of the vehicle's compliance or noncompliance with inspection standards shall be final upon reinspection by the director.

Effective: 02/12/2015

Five Year Review (FYR) Dates: 11/28/2014 and 02/12/2020

CERTIFIED ELECTRONICALLY
Certification

02/02/2015
Date

Promulgated Under: 119.03
Statutory Authority: 3704.14
Rule Amplifies: 3704.14
Prior Effective Dates: 6/13/94, 12/29/95, 8/15/96

3745-26-13 **Requirements for certified inspectors in the enhanced automobile inspection and maintenance program.**

[Comment: For dates and availability of non-regulatory government publications, publications of recognized organizations and associations, federal rules, and federal statutory provisions referenced in this rule, see paragraph (MM) of rule 3745-26-01 of the Administrative Code titled "referenced materials."]

(A) Application procedures.

Each person applying for inspector certification shall be at least eighteen years old. Applicants shall submit a complete application and agree in writing to inspect vehicles in accordance with the rules of this chapter and the Administrative Code.

(B) Inspector training and certification.

(1) The contractor in each designated nonattainment area shall be responsible for training each inspector applicant employed by the contractor according to the requirements in 40 CFR 51.367.

(2) Applicants shall successfully complete the required training and score at least eighty per cent on the written examination and hands-on demonstration administered by Ohio EPA.

(3) The director shall issue a certificate to each person who satisfies all the requirements of this rule. The certificate shall be available at the test facility where the certified inspector performs inspections.

(4) Each inspector shall be certified for a two-year period. Inspectors requiring recertification may be recertified after attending and successfully completing a recertification course and test.

(C) Inspector conduct.

(1) Certified inspectors shall not conduct inspections while under the influence of alcohol or a disabling medication or drug.

(2) Certified inspectors shall not participate in the solicitation of a bribe in order to pass a vehicle or any other fraudulent activity.

(3) The director may require a certified inspector to attend additional training at any time or require re-administration of the written exam or hands-on demonstration to determine if a certified inspector has sufficient knowledge of the rules and procedures in this chapter and the Administrative Code.

(4) The director may immediately suspend or revoke an inspector's certification for failing to comply with this rule.

Effective: 02/12/2015

Five Year Review (FYR) Dates: 11/28/2014 and 02/12/2020

CERTIFIED ELECTRONICALLY
Certification

02/02/2015
Date

Promulgated Under: 119.03
Statutory Authority: 3704.14
Rule Amplifies: 3704.14
Prior Effective Dates: 6/13/94

3745-26-14 **Enforcement of program rules and regulations for the enhanced automobile inspection and maintenance program.**

[Comment: For dates and availability of non-regulatory government publications, publications of recognized organizations and associations, federal rules, and federal statutory provisions referenced in this rule, see paragraph (MM) of rule 3745-26-01 of the Administrative Code titled "referenced materials."]

(A) As required by 40 CFR 51.359 and 40 CFR 51.363, the director shall administer a program of quality assurance and shall require each contractor to implement a quality control program.

(B) The director may deny, or immediately suspend or revoke an inspector's certification issued under section 3704.14 of the Revised Code for any violations of these sections and paragraph (B) of rule 3745-21-13 of the Administrative Code, or for any of the following:

(1) Commission of fraud or willful misrepresentation in application for or in obtaining a license.

(2) Conviction of a felony while certified as an inspector.

(3) Improper testing of motor vehicles.

(4) Improper use or misrepresentations of vehicle inspection reports.

(5) Misrepresentation of vehicle inspection.

(C) Any inspector whose certification is revoked under Chapter 119. or section 3704.17 of Revised Code shall not be eligible to reapply for certification for a three-year period from the date the inspector certification was revoked.

Effective: 02/12/2015

Five Year Review (FYR) Dates: 11/28/2014 and 02/12/2020

CERTIFIED ELECTRONICALLY
Certification

02/02/2015
Date

Promulgated Under: 119.03
Statutory Authority: 3704.14
Rule Amplifies: 3704.14
Prior Effective Dates: 6/13/94

3745-26-15 **Waiver repair facility certification procedures, requirements, and obligations.**

(A) For the purposes of compliance with the waiver related repairs in paragraph (E) of rule 3745-26-12 of the Administrative Code, the director may issue a waiver repair facility certification or renewal thereof, to an applicant who meets the following:

(1) Submission of a completed application on a form prescribed by the director.

(2) Demonstration, during any on-site inspection by a designee of the director, of compliance with this chapter.

(B) For applicants who meet or continue to meet the criteria for certifying as a waiver repair facility, the director shall issue an initial or a renewal certification to the facility for a period not to exceed three years. Any renewal application not received within ten days after the last day of the renewal date shall be considered evidence that the facility does not intend to renew their application for a certificate. For any voluntary relinquishment or abandonment of certificate, or cessation of operation of the facility, it is the responsibility of the applicant to notify the director, at least seven days in advance, of the exact date the facility will cease conducting waiver repairs as a certified facility. The director shall reclaim all state-owned or state-provided property.

(C) The certificate shall be valid only for the following:

(1) The owner in whose name the certificate is issued.

(2) The transaction of business for the purpose of this chapter.

(3) The location designated on the certificate. The applicant shall provide proof that the required emissions equipment as detailed in paragraph (G) of this rule, has been or will be purchased or leased and ready for operation within one week of purchase or lease.

(D) The director may include terms and conditions as part of any certificate issued, to ensure compliance with this chapter.

(E) Each waiver repair facility shall have a minimum of one certified waiver repair technician, as certified in accordance with rule 3745-26-16 of the Administrative Code. The applicant shall notify the director within seven calendar days, in writing, when the last employee, who is a certified waiver repair technician, resigns, is dismissed, or otherwise leaves employment at the facility. If a certified waiver repair technician resigns, is dismissed, or otherwise leaves employment at the facility resulting in no certified technicians currently at the facility, the facility will no longer be qualified to be on the list as a certified repair facility.

(F) The director may revoke any waiver repair facility certificate for a facility failing to maintain and meet the terms and conditions established in this rule.

(G) Certified waiver repair facilities shall lose their certification if any of the following items are missing or are not in full operating condition:

(1) Current reference materials.

(2) DVOM or digital multi-meter.

(3) Vacuum gauge.

(4) Fuel pressure test kit.

(5) Carbon cleaner system.

(6) Three, four, or five gas analyzer.

(7) Scan tool.

(8) Ignition scope with DIS capabilities.

(H) The following items are required beginning January 1, 1998 when U.S. EPA's phase-in specifications are upgraded:

(1) Lab scope.

(2) Purge flow tester.

(3) Scan tool with OBD II capabilities.

(I) If the director deems it necessary and upon reasonable written notice, additions or deletions of waiver repair facility equipment may be required.

(J) The owner or operator of each certified waiver repair facility shall display the official sign issued by the director. The official certified waiver repair facility sign shall be displayed in full view of the public and shall not be altered in any way.

The sign shall remain the property of the Ohio EPA and, upon discontinuance as a certified waiver repair facility, shall be surrendered by the applicant to an authorized representative of the Ohio EPA when so ordered by the director.

(K) Each certified waiver repair facility shall contact the director at least thirty days prior to a change of ownership, business name, or location. Upon notice of a change of a facility owner or location, the director shall issue a certificate under the subsequent facility name, owner, or location, provided the facility meets or continues to meet the minimum criteria as a certified waiver repair facility.

(L) In the event of any changes, the subsequent owner or the current owner of a subsequent facility location shall submit a new certification application to the director.

Effective: 02/12/2015

Five Year Review (FYR) Dates: 11/28/2014 and 02/12/2020

CERTIFIED ELECTRONICALLY
Certification

02/02/2015
Date

Promulgated Under: 119.03
Statutory Authority: 3704.14
Rule Amplifies: 3704.14
Prior Effective Dates: 12/29/95

3745-26-16 **Requirements for certified waiver repair technicians and approved technician trainers.**

[Comment: For dates and availability of non-regulatory government publications, publications of recognized organizations and associations, federal rules, and federal statutory provisions referenced in this rule, see paragraph (MM) of rule 3745-26-01 of the Administrative Code titled "referenced materials."]

(A) The director shall certify any applicant as a waiver repair technician to conduct waiver repairs as required in paragraph (E) of rule 3745-26-12 of the Administrative Code provided the applicant does the following:

(1) Submits a completed application on a form prescribed by the director.

(2) Completes and satisfactorily passes a training curriculum sponsored or approved by the Ohio environmental protection agency for the purpose of learning the methods and procedures to be used in properly repairing vehicles failing an emissions inspection. The applicant is required to satisfactorily pass the approved training course written examination.

(3) The requirement to complete and satisfactorily pass the approved training course may be waived by the director, if the applicant possesses current automotive service excellence (ASE) certification in advanced engine performance (L1) or other certification deemed comparable by the director. .

(4) Possesses current ASE certification in Engine Performance (A8) and Electrical Systems (A6), ensuring that the technician has demonstrated competence in the area of basic emissions control systems. Beginning January 1, 1998, ASE certification in Automobile Advanced Engine Performance (L1) will be required of each applicant. The director reserves the right to require or waive performance standards as the director deems necessary.

(B) Certification as a waiver repair technician shall be valid for two years. Each certified technician may conduct or otherwise perform waiver repairs only at a certified waiver repair facility.

(C) The director shall provide each applicant a waiver repair technician's certificate upon successful completion of certification requirements. The candidate may perform waiver related repairs as required in rule 3745-26-12 of Administrative Code prior to the reception of a certificate only if all other requirements for certification have been met and satisfactorily completed or passed.

(D) Certified waiver repair technicians who change their place of employment from one certified waiver repair facility to another may continue to conduct waiver repairs so long as their certification is valid.

Certified technicians shall notify the director prior to a change in place of employment.

(E) The director may require a certified waiver repair technician to attend a program update training course at any time in order to maintain certification. The director shall notify the technician in writing of any additional training requirements.

(F) Recertification as a waiver repair technician shall consist of submitting an application to the director before the current certification expires. Additional training may also be required.

(G) Approval of technician trainers.

(1) The director may approve waiver repair technician trainers.

(2) The director may include terms and conditions necessary to become an Ohio EPA approved trainer for the purpose of training and certifying waiver repair technician.

(3) Upon approval by the director, Ohio EPA approved trainers shall also be certified as a certified waiver repair technician.

Effective: 02/12/2015

Five Year Review (FYR) Dates: 11/28/2014 and 02/12/2020

CERTIFIED ELECTRONICALLY
Certification

02/02/2015
Date

Promulgated Under: 119.03
Statutory Authority: 3704.14
Rule Amplifies: 3704.14
Prior Effective Dates: 12/29/95

Chapter 3745-31: Permits to Install New Sources

Contact: Mike Hopkins 614-644-2270
Mike.Hopkins@epa.ohio.gov

3745-31-01 **Definitions.**

[Comment: For dates and availability of non-regulatory government publications, publications of recognized organizations and associations, federal rules, and federal statutory provisions referenced in this rule, see paragraph (LLLLLL) of this rule titled "referenced materials."]

(A) Except as otherwise provided in this rule, the definitions in rules 3745-15-01 and 3745-21-01 of the Administrative Code shall apply to this chapter.

(B) "Acid rain program" means the program contained within Title IV of the Clean Air Act.

(C) "Actual emissions" means the actual rate of emissions of a regulated NSR pollutant from an emissions unit, as determined under this paragraph, except that this definition shall not apply for calculating whether a significant emissions increase, as defined in this rule, has occurred, or for establishing a PAL under rule 3745-31-33 of the Administrative Code.

(1) Actual emissions as of a particular date shall equal the average rate, in tons per year, at which the emissions unit actually emitted the pollutant during a consecutive twenty-four-month period which precedes the particular date and which is representative of normal emissions unit operation. The director shall allow the use of a different time period upon a determination that it is more representative of normal emissions unit operation. Actual emissions shall be calculated using the emissions unit's actual operating hours, production rates and types of materials processed, stored or combusted during the selected time period.

(2) The director may presume that emissions unit-specific allowable emissions for the emissions unit are equivalent to the actual emissions of the emissions unit.

(3) For any emissions unit that has not begun normal operations on the particular date, actual emissions shall equal the potential to emit of the emissions unit on that date.

(D) "Actuals PAL" for a major stationary source means a PAL based on the baseline actual emissions of all emissions units at the source that emit or have the potential to emit the PAL pollutant.

(E) "Adhesive" means any substance that is used to bond one surface to another surface.

(F) "Administrative modification" means a change to a permit to install or a PTIO that does not meet the definition of a modification under this rule.

(G) "Affected sources" shall have the meaning given to it in the regulations promulgated under Title IV of the Clean Air Act.

(H) "Air contaminant" means particulate matter, dust, fumes, gas, mist, radionuclides, smoke, vapor or odorous substances, or any combination thereof.

(I) "Air contaminant source," for the purpose of this chapter, means each separate operation, or activity that results or may result in the emission of any of the following air contaminants:

(1) An air contaminant or precursor of an air contaminant for which a national ambient air quality standard has been adopted under the Clean Air Act.

(2) An air contaminant for which the source is regulated under the Clean Air Act.

(3) A toxic air contaminant as listed in rule 3745-114-01 of the Administrative Code.

(J) "Air contaminant source project" means the installation or modification of one or more air contaminant sources (and any structures associated with such installations or modifications), all of which results from a discrete production goal or objective.

(K) "Allowable emissions" means the emission rate of an air contaminant source calculated using the maximum rated capacity of the air contaminant source (unless the air contaminant source is subject to limits that are federally enforceable or legally and practically enforceable by the state that restrict the operating rate or hours of operation, or both), and the most stringent of the following:

(1) The applicable standards as set forth in 40 CFR Parts 60, 61 and 63; or

(2) The applicable Ohio state implementation plan emission limitation, including those with a future compliance date; or

(3) The emission rate by a permit condition that is federally enforceable or legally and practically enforceable by the state, including those with a future compliance date.

(L) "Applicable laws" means any applicable provisions of Chapters 3704. and 3745. of the Revised Code; rules, regulations, and orders of the Ohio environmental protection agency, the Clean Air Act; and rules and regulations of the administrator of the United States environmental protection agency (including any Ohio rule, law, or provision of the Ohio state implementation plan that has been approved or promulgated by the United States environmental protection agency.).

(M) "Auto body refinishing facility" means a facility engaged primarily in collision repair and refinishing of automobiles and trucks. Automobile paint-only and customizing facilities, which are engaged in repainting used motor vehicles and

trucks, but do not perform collision repair work, are also included in this definition. Mobile auto body painting operations, which employ temporary spray booths meeting the design criteria specified by paragraph (A)(4)(g) of rule 3745-31-03 of the Administrative Code, are also included in this definition.

(N) "Available information" means, for purposes of identifying control technology options for a major MACT source, information contained in the following information sources as of the date of the MACT determination by the director:

(1) A relevant proposed regulation, including all supporting documentation.

(2) Background information documents for a draft or proposed regulation.

(3) Data and information available from the "Control Technology Center" developed pursuant to Section 113 of the Clean Air Act.

(4) Data and information contained in the "Aerometric Informational Retrieval System" including information in the MACT database.

(5) Any additional information that can be expeditiously provided by the administrator.

(6) Any additional information provided by the applicant or others, and any additional information considered available by the director.

(O) "Baseline actual emissions" means the rate of emissions, in tons per year, of a regulated NSR pollutant, as determined under this rule.

(1) For any existing electric utility steam generating unit, baseline actual emissions means the average rate, in tons per year, at which the unit actually emitted the pollutant during any consecutive twenty-four-month period selected by the owner or operator within the five-year period immediately preceding when the owner or operator begins actual construction of the NSR project. The director shall allow the use of a different time period upon a determination that it is more representative of normal source operation.

(a) The average rate shall include fugitive emissions to the extent quantifiable, and emissions associated with startups, shutdowns, and malfunctions.

(b) The average rate shall be adjusted downward to exclude any non-compliant emissions that occurred while the source was operating above any emission limitation that was legally enforceable during the consecutive twenty-four-month period.

(c) For a regulated NSR pollutant, when a NSR project involves multiple emissions units, only one consecutive twenty-four-month period must be used to determine the baseline actual emissions for the emissions units being changed. A different consecutive twenty-four-month period can be used for each regulated NSR pollutant.

(d) The average rate shall not be based on any consecutive twenty-four-month period for which there is inadequate information for determining annual emissions, in tons per year, and for adjusting this amount if required by paragraph (O)(1)(b) of this rule.

(2) For an existing emissions unit (other than an electric utility steam generating unit), baseline actual emissions means the average rate, in tons per year, at which the emissions unit actually emitted the pollutant during any consecutive twenty-four-month period selected by the owner or operator within the ten-year period immediately preceding either the date the owner or operator begins actual construction of the NSR project, or the date a complete permit application is received by the director for a permit required either under this rule or under a plan approved by the administrator, whichever is earlier, except that the ten-year period shall not include any period earlier than November 15, 1990.

(a) The average rate shall include fugitive emissions to the extent quantifiable, and emissions associated with startups, shutdowns, and malfunctions.

(b) The average rate shall be adjusted downward to exclude any non-compliant emissions that occurred while the source was operating above an emission limitation that was legally enforceable during the consecutive twenty-four-month period.

(c) The average rate shall be adjusted downward to exclude any emissions that would have exceeded an emission limitation with which the major stationary source must currently comply, had such major stationary source been required to comply with such limitations during the consecutive twenty-four-month period. However, if an emission limitation is part of a MACT standard that the administrator proposed or promulgated under 40 CFR Part 63, the baseline actual emissions need only be adjusted if the state has taken credit for such emission reductions in an attainment demonstration or maintenance plan consistent with the requirements in rule 3745-31-22 of the Administrative Code.

(d) For a regulated NSR pollutant, when a NSR project involves multiple emissions units, only one consecutive twenty-four-month period must be used to determine the baseline actual emissions for the emissions units being changed. A different consecutive twenty-four-month period can be used for each regulated NSR pollutant.

(e) The average rate shall not be based on any consecutive twenty-four-month period for which there is inadequate information for determining annual emissions, in tons per year, and for adjusting this amount if required by paragraphs (O)(2)(b) and (O)(2)(c) of this rule.

(3) For a new emissions unit, the baseline actual emissions for purposes of determining the emissions increase that will result from the initial

construction and operation of such unit shall equal zero if the operation of the new emissions unit has not yet begun, or shall equal the unit's potential to emit if operation of the new emissions unit has begun.

(4) For a PAL for a major stationary source, the baseline actual emissions shall be calculated for existing electric utility steam generating units in accordance with the procedures contained in paragraph (O)(1) of this rule, for other existing emissions units in accordance with the procedures contained in paragraph (O)(2) of this rule, and for a new emissions unit in accordance with the procedures contained in paragraph (O)(3) of this rule.

(P) "Baseline area" means any intrastate area (and every part thereof) designated as attainment or unclassifiable under Section 107(d) of the Clean Air Act in which the major stationary source or major modification establishing the minor source baseline date would construct or would have an air quality impact for the pollutant for which the baseline date is established, as follows: equal to or greater than one microgram per cubic meter (annual average) for sulfur dioxide, nitrogen dioxide or PM10; or equal to or greater than 0.3 microgram per cubic meter for PM2.5.

Any baseline area established originally for the TSP increments shall remain in effect and shall apply for purposes of determining the amount of available PM10 increments, except that such baseline area shall not remain in effect if the permit authority rescinds the corresponding minor source baseline date in accordance with paragraph (QQQ)(5) of this rule.

Area redesignations under Section 107(d) of the Clean Air Act cannot intersect or be smaller than the area of impact of any major stationary source or major modification that:

(1) Establishes a minor source baseline date; or

(2) Is subject to 40 CFR 52.21 or under regulations approved pursuant to 40 CFR 51.166, and would be constructed in the same state as the state proposing the redesignation.

(Q) "Baseline concentration" means that ambient concentration level that exists in the baseline area at the time of the applicable minor source baseline date. A baseline concentration is determined for each pollutant for which a minor source baseline date is established and shall include:

(1) The actual emissions, as defined in this rule, representative of sources in existence on the applicable minor source baseline date, except as provided in paragraph (Q)(3) of this rule;

(2) The allowable emissions of major stationary sources that commenced construction before the major source baseline date, but were not in operation by the applicable minor source baseline date.

(3) The following will not be included in the baseline concentration and will affect the applicable maximum allowable increase:

(a) Actual emissions, as defined in this rule, from any major stationary source on which construction commenced after the major source baseline date; and

(b) Actual emissions increases and decreases, as defined in this rule, at any stationary source occurring after the minor source baseline date.

(R) "Begin actual construction" means, in general, initiation of physical on-site construction activities on an air contaminant source project that are of a permanent nature. Activities that are considered to be included and excluded from this definition are further identified in rule 3745-31-33 of the Administrative Code.

(S) "Best available control technology" or "BACT" means an emission limitation (including a visible emission standard) based on the maximum degree of reduction for each regulated NSR pollutant which would be emitted from any proposed major stationary source or major modification which the director, on a case-by-case basis, taking into account energy, environmental and economic impacts and other costs, determines is achievable for such major stationary source or major modification through application of production processes or available methods, systems and techniques, including fuel cleaning or treatment or innovative fuel combustion techniques for control of such pollutant. In no event shall application of BACT result in emissions of any pollutant that would exceed the emissions allowed by any applicable standard under 40 CFR Parts 60, 61, and 63. If the director determines that technological or economic limitations on the application of measurement methodology to a particular emissions unit would make the imposition of an emission standard infeasible, a design, equipment, work practice, operational standard, or combination thereof, may be approved by the director instead to satisfy the requirement for the application of BACT. Such standard shall, to the degree possible, set forth the emission reduction achievable by implementation of such design, equipment, work practice or operation and shall provide for compliance by means which achieve equivalent results.

(T) "Best available technology" or "BAT" means any combination of work practices, raw material specifications, throughput limitations, source design characteristics, an evaluation of the annualized cost per ton of air pollutant removed, and air pollution control devices that have been previously demonstrated to the director of environmental protection to operate satisfactorily in this state or other states with similar air quality on substantially similar air pollution sources.

(U) "Clean Air Act" means the federal Clean Air Act; 42 USC 7401 to 7671q.

(V) "Clean coal technology" means any technology, including technologies applied at the precombustion, combustion, or postcombustion stage, at a new or existing

facility that will achieve significant reductions in air emissions of sulfur dioxide or oxides of nitrogen associated with the utilization of coal in the generation of electricity, or process steam, and that is not in widespread use as of November 15, 1990.

(W) "Clean coal technology demonstration project" means a project using funds appropriated under the heading "Department of Energy-Clean Coal Technology," up to a total amount of two billion five hundred million dollars for commercial demonstration of clean coal technology, or similar projects funded through appropriations for the United States environmental protection agency. The federal contribution for a qualifying clean coal technology demonstration project shall be at least twenty per cent of the total cost of the clean coal technology demonstration project.

(X) "Cleaning solution" means liquid solvents or solutions used to remove ink and debris from the operating surfaces of the printing press and its parts.

(Y) Reserved.

(Z) "Commence" as applied to construction of a major stationary source or major modification means that the owner or operator has all necessary preconstruction approvals or permits and either has:

(1) Begun, or caused to begin, a continuous program of actual on-site construction or the major stationary source or major modification, to be completed within a reasonable time; or

(2) Entered into binding agreements or contractual obligations (which cannot be canceled or modified without substantial loss to the owner or operator) to undertake a program of actual construction of the major stationary source or major modification to be completed within a reasonable time.

(AA) "Commercial bakery" means an establishment that is primarily engaged in manufacturing fresh or frozen bread, bread-type rolls and dry bakery products (e.g. biscuits, crackers, and cookies). This definition does not include establishments that produce bakery products primarily for direct sale on the premises to household consumers.

(BB) "Complete", in reference to an application for a permit, means that the application contains all the information necessary for processing the application. Designating an application complete for purposes of permit processing does not preclude the director from requesting or accepting any additional information.

(CC) "Construct a major MACT source" means:

(1) Fabricate, erect, or install at any greenfield site a stationary source or group of stationary sources which is located within a contiguous area and under common control and which emits or has the potential to emit ten tons per

year or more of any HAP or twenty-five tons per year or more of any combination of HAPs, or

(2) Fabricate, erect, or install, at any developed site a new process or production unit which in and of itself emits or has the potential to emit ten tons per year or more of any HAP or twenty-five tons per year or more of any combination of HAPs, unless the process or production unit satisfies the following criteria:

(a) All HAPs emitted by the process or production unit that would otherwise be controlled under the requirements of rule 3745-31-28 of the Administrative Code will be controlled by emission control equipment which was previously installed at the same site as the process or production unit;

(b) One of the following determinations has been made:

(i) The director has determined within a period of five years prior to the fabrication, erection, or installation of the process or production unit that the existing control equipment represented the BACT, LAER, BAT, or MACT based on air toxics rules for the category of pollutants which includes those HAPs to be emitted by the process or production unit; or

(ii) The director determines that the control of HAP emissions provided by the existing equipment will be equivalent to that level of control currently achieved by other well-controlled similar sources (i.e., will be equivalent to the level of control that would be provided by a current BACT, LAER, BAT, or air toxic MACT determination);

(c) The director determines that the per cent control efficiency for emissions of HAPs from all sources to be controlled by the existing control equipment will be equivalent to the per cent control efficiency provided by the control equipment prior to the inclusion of the new process or production unit;

(d) The director has provided notice and an opportunity for public comment concerning its determination that criteria in paragraphs (CC)(2)(a), (CC)(2)(b), and (CC)(2)(c) of this rule apply and concerning the continued adequacy of any prior LAER, BACT, BAT, or air toxic MACT determination;

(e) If any commenter has asserted that a prior LAER, BACT, BAT, or air toxic MACT determination is no longer adequate, the director has determined that the level of control required by that prior determination remains adequate; and

(f) Any emission limitations, work practice requirements, or other terms and conditions upon which the above determinations by the permitting

authority are predicated, will be construed as applicable requirements under Section 504(a) of the Clean Air Act and either have been incorporated into any existing Title V permit for the affected facility or will be incorporated into such permit upon issuance.

(DD) "Construction" means any physical change or change in the method of operation (including fabrication, erection, installation, demolition or modification of an emissions unit) that would result in a change in emissions.

(EE) "Continuous emissions monitoring system" or "CEMS" means all of the equipment that may be required to meet the data acquisition and availability requirements of this chapter, to sample, condition (if applicable), analyze, and provide a record of emissions on a continuous basis.

(FF) "Continuous emissions rate monitoring system" or "CERMS" means the total equipment required for the determination and recording of the pollutant mass emission rate (in terms of mass per unit of time).

(GG) "Continuous parameter monitoring system" or "CPMS" means all of the equipment necessary to meet the data acquisition and availability requirements of this chapter, to monitor process and control device operational parameters (for example, control device secondary voltages and electric currents) and other information (for example, gas flow rate, oxygen or carbon dioxide concentrations), and to record average operational parameter value(s) on a continuous basis.

(HH) "Control technology" means measures, processes, methods, systems, or techniques, to limit the emission of HAPs including, but not limited to, measures that:

(1) Reduce the quantity of, or eliminate emissions of, such pollutants through process changes, substitution of materials or other modifications;

(2) Enclose systems or processes to eliminate emissions;

(3) Collect, capture, or treat such pollutants when released from a process, stack, storage or fugitive emissions point;

(4) Are design, equipment, work practice, or operational standards (including requirements for operator training or certification) as provided in 42 USC 7412(h); or

(5) Are a combination of paragraphs (HH)(1) to (HH)(4) of this rule.

(II) "Criteria pollutant" means PM10, PM2.5, nitrogen oxides, VOCs, sulfur dioxide, carbon monoxide, lead or any other air pollutant for which a national ambient air quality standard has been promulgated under Section 109 of the Clean Air Act.

(JJ) "Digital printing (direct-to-media printing) line" means a printing line where the transfer of electronic files occurs directly from the computer to an electronically

driven output device that prints the image directly on the selected media (substrate). Electronic images and four-color process images can be printed virtually any size.

(KK) "Distillate oil" means a petroleum product designated as number one fuel oil, number two fuel oil (with less than or equal to 0.5 per cent by weight sulfur), diesel fuel or kerosene by the "American Petroleum Institute".

(LL) "Electric utility steam generating unit" means any steam electric generating unit that is constructed for the purpose of supplying more than one-third of its potential electric output capacity and more than twenty-five megawatt electrical output to any utility power distribution system for sale. Any steam supplied to a steam distribution system for the purpose of providing steam to a steam-electric generator that would produce electrical energy for sale is also considered in determining the electrical energy output capacity of the affected facility.

(MM) "Emergency" means:

(1) An emergency caused by flooding, damaging winds or tornado, fire, or other natural disaster.

(2) An electric power outage due to a failure of the electrical grid, local supply equipment failure, or facility equipment failure.

(3) Any situation that the director determines to be an immediate threat to human health, property, or the environment.

(NN) "Emergency engine" means a stationary reciprocating engine or a turbine engine which operates as an emergency or standby mechanical or electrical power source and is used only during the following:

(1) Emergencies.

(2) Any combination of the following purposes for a maximum of one hundred hours per calendar year:

(a) Maintenance checks and readiness testing, provided that the tests are recommended by federal, state or local government, the manufacturer, the vendor, the regional transmission organization or equivalent balancing authority and transmission operator, or the insurance company associated with the engine.

(b) Emergency demand response for periods in which the regional transmission authority or equivalent balancing authority and transmission operator has declared an "Energy Emergency Alert Level 2 (EEA Level 2)" as defined in the "North American Electric Reliability Corporation Reliability Standard EOP-002-3, Capacity and Energy Emergencies."

(c) Periods where there is a deviation of voltage or frequency of five per cent or greater below standard voltage or frequency.

(d) Operation of up to fifty hours per calendar year to supply power as part of a financial arrangement with another entity if all of the conditions in paragraphs (NN)(d)(i) to (NN)(d)(v) of this rule are met. The fifty hours of non-emergency operation are counted as part of the one hundred hours per calendar year described in paragraph (NN)(2) of this rule.

(i) The engine is dispatched by the local balancing authority or local transmission and distribution system operator.

(ii) The dispatch is intended to mitigate local transmission and/or distribution limitations so as to avert potential voltage collapse or line overloads that could lead to the interruption of power supply in a local area or region.

(iii) The dispatch follows reliability, emergency operation or similar protocols that follow specific NERC, regional, state, public utility commission or local standards or guidelines.

(iv) The power is provided only to the facility itself or to support the local transmission and distribution system.

(v) The owner or operator identifies and records the entity that dispatches the engine and the specific NERC, regional, state, public utility commission or local standards or guidelines that are being followed for dispatching the engine. The local balancing authority or local transmission and distribution system operator may keep these records on behalf of the engine owner or operator.

(e) The fifty hours per year for non-emergency situations cannot be used for peak shaving or non-emergency demand response, or to generate income for a facility to supply power to an electric grid or otherwise supply power as part of a financial arrangement with another entity unless the conditions in paragraph (NN)(2)(d) of this rule are met.

(OO) "Emissions unit" means any part of a stationary source that emits or would have the potential to emit any regulated NSR pollutant and includes an electric utility steam generating unit. Air contaminant sources that do not emit or would not have the potential to emit any regulated NSR pollutant but which emit a pollutant regulated under state law are not considered emissions units. There are two types of emissions units:

(1) A "new emissions unit" means any emissions unit which is (or will be) newly constructed and which has existed for less than two years from the date such emissions unit first operated.

(2) An "existing emissions unit" means any emissions unit that does not meet the requirements in paragraph (OO)(1) of this rule. A replacement unit, as defined in this rule, is an existing emissions unit.

(PP) "Express permit-to-install" or "express PTIO" means a registration status permit-to-install or registration status PTIO that is registered for express processing and issuance pursuant to paragraph (G) of rule 3745-31-05 of the Administrative Code and pursuant to the division (A) of section 3704.037 of the Revised Code.

(QQ) "Facility" means all of the air contaminant sources that belong to the same industrial grouping, are located on one or more contiguous or adjacent properties, and are under the control of the same person (or persons under common control) except the activities of any vessel and those emissions resulting directly from an internal combustion engine for transportation purposes or from a non-road engine or non-road vehicle as defined in Section 216 of the Clean Air Act. Air contaminant sources shall be considered as part of the same industrial grouping if they belong to the same major group (i.e., they have the same two-digit code) as described in the "Standard Industrial Classification Manual."

(RR) "Federal land manager" means, with respect to any lands in the United States, the secretary of the department with authority over such lands.

(SS) "Federally enforceable" means all limitations and conditions that are enforceable by the administrator (of the United States environmental protection agency), including those requirements developed pursuant to 40 CFR Parts 60, 61 and 63, requirements within the Ohio state implementation plan that implements the requirements of the Clean Air Act, any permit requirements designated as federally enforceable established pursuant to 40 CFR 52.21 or under regulations approved pursuant to 40 CFR Part 51, Subpart I, including operating permit requirements designated as federally enforceable issued under an United States environmental protection agency-approved program that is incorporated into the Ohio state implementation plan and expressly requires adherence to any permit issued under such program.

(TT) "Fountain solution additives" means volatile and non-volatile chemicals, alcohols, and other additives, which are blended with water to form the fountain solution used in the lithographic printing process.

(UU) "Fugitive emissions" means those emissions that cannot reasonably pass through a stack, chimney, vent or other functionally equivalent opening.

(VV) "General permit" means a general permit-to-install or a general PTIO.

(WW) "General permit-to-install" or "general PTIO" means a permit-to-install or PTIO issued under rule 3745-31-29 of the Administrative Code.

(XX) "Greenfield site" means a contiguous area under common control that is an undeveloped site.

(YY) "Hazardous air pollutant" or "HAP" means any air pollutant listed in, or pursuant to, Section 112(b) of the Clean Air Act.

(ZZ) "High terrain" means any area having an elevation of nine hundred feet or more above the base of the stack of a stationary source.

(AAA) "Indian governing body" means the governing body of any tribe, band, or group of Indians subject to the jurisdiction of the United States and recognized by the United States as possessing power of self-government.

(BBB) "Indian reservation" means any federally recognized reservation established by treaty, agreement, executive order, or act of congress.

(CCC) "Innovative control technology" means any system of air pollution control that has not been adequately demonstrated in practice, but would have a substantial likelihood of achieving greater continuous emission reduction than any control system in current practice or of achieving at least comparable reductions at lower cost in terms of energy, economics or non air quality environmental impacts.

(DDD) "Install" or "installation" means to begin actual construction, erect, locate or affix any air contaminant source.

(EEE) "Job" means the total area or areas to be refinished or repainted on an automobile or truck by an auto body refinishing facility.

(FFF) "Letterpress printing line" means a printing process where the image area is raised relative to the non-image area and the paste ink is transferred to the paper directly from the image surface without the use of an anilox roller.

(GGG) "List of source categories" means the source category list required by Section 112(c) of the Clean Air Act.

(HHH) "Low terrain" means any area other than high terrain.

(III) "Lowest achievable emission rate" or "LAER", for any emissions unit, means the more stringent rate of emissions based on the following:

(1) The most stringent emission limitation that is contained in the implementation plan of any state for such class or category of emissions unit, unless the owner or operator of the proposed emissions unit demonstrates that such limitations are not achievable.

(2) The most stringent emission limitation that is achieved in practice by such class or category of emissions unit. This limitation, when applied to a major modification, means LAER for the new or modified emissions units within the stationary source. In no event shall the application of this term permit a proposed new or modified emissions unit to emit any air pollutant in excess of the amount allowable under applicable new source standards of performance.

(JJJ) "MACT determination" means any combination of emission limitations, work practices, raw material specifications, throughput limitations, source design characteristics, and air pollution control devices that achieve the level of HAP control required by paragraph (E) of rule 3745-31-28 of the Administrative Code.

(KKK) "Major MACT source" means any process or production unit that in and of itself has the potential to emit ten tons per year or more of any single HAP or twenty-five tons per year or more of any combination of HAPs.

(LLL) "Major modification" means:

(1) Any physical change in or change in the method of operation of a major stationary source that would result in a combination of the following:

(a) A significant emissions increase of a regulated NSR pollutant.

(b) A significant net emissions increase of that pollutant from the major stationary source.

[Comment: Except as otherwise provided in rule 3745-31-32 of the Administrative Code, and consistent with the definition of major modification, a NSR project is a major modification for a regulated NSR pollutant if it causes two types of emissions increases; a significant emissions increase and a significant net emissions increase. The NSR project is not a major modification if it does not cause a significant emissions increase. If the NSR project causes a significant emissions increase, then the NSR project is a major modification only if it also results in a significant net emissions increase.]

(2) Any significant emissions increase from any emissions units or net emissions increase at a major stationary source that is considered significant for VOCs or nitrogen oxides shall be considered significant for ozone.

(3) The procedure for calculating (before beginning actual construction) whether a significant emissions increase (i.e., the first step of the process) will occur depends upon the type of emissions units being modified, according to paragraphs (LLL)(4)(a) to (LLL)(4)(c) of this rule. The procedure for calculating (before beginning actual construction) whether a significant net emissions increase will occur at the major stationary source (i.e., the second step of the process) is contained in paragraph (VVV) of this rule. Regardless of any such preconstruction projections, a major modification results if the NSR project causes a significant emissions increase and a significant net emissions increase.

(a) Actual-to-projected-actual applicability test for NSR projects that only involve existing emissions units.

A significant emissions increase of a regulated NSR pollutant is projected to occur if the sum of the difference between the projected

actual emissions and the baseline actual emissions, for each existing emissions unit, equals or exceeds the significant amount for that pollutant.

(b) Actual-to-potential test for NSR projects that only involve construction of a new emissions unit.

A significant emissions increase of a regulated NSR pollutant is projected to occur if the sum of the difference between the potential to emit from each new emissions unit following completion of the NSR project and the baseline actual emissions of these emissions units before the NSR project equals or exceeds the significant amount for that pollutant.

(c) Hybrid test for NSR projects that involve multiple types of emissions units.

A significant emissions increase of a regulated NSR pollutant is projected to occur if the sum of the emissions increases for each emissions unit, using the method specified in paragraphs (LLL)(4)(a) to (LLL)(4)(b) of this rule as applicable with respect to each emissions unit, for each type of emissions unit equals or exceeds the significant amount for that pollutant.

(4) A physical change or change in the method of operation shall not include the following:

(a) Routine maintenance, routine repair, and routine replacement.

(b) Use of an alternative fuel or raw material by reason of an order under Section 2(A) and (B) of the Energy Supply and Environmental Coordination Act of 1974 (or any superseding legislation) or by reason of a natural gas curtailment plan pursuant to the Federal Power Act.

(c) Use of an alternative fuel by reason of an order or rule under Section 125 of the Clean Air Act.

(d) Use of an alternative fuel at a steam generating unit to the extent that the fuel is generated from municipal solid waste.

(e) Use of an alternative fuel or raw material by a stationary source that does one of the following:

(i) For nonattainment NSR purposes, the stationary source was capable of accommodating before December 21, 1976, unless such change would be prohibited under any federally enforceable permit condition that was established after December 21, 1976, pursuant to 40 CFR 52.21 or under regulations approved pursuant to 40 CFR Part 51, Subpart I or 40 CFR 51.166.

(ii) For PSD purposes, the stationary source was capable of accommodating before January 6, 1975, unless such change would be prohibited under any federally enforceable permit condition that was established after January 6, 1975, pursuant to 40 CFR 52.21 or under regulations approved pursuant to 40 CFR Part 51, Subpart I or 40 CFR 51.166.

(iii) The stationary source is approved to use under any effective and applicable nonattainment NSR permit or PSD permit.

(f) An increase in the hours of operation or in the production rate, unless such change is prohibited under any federally enforceable permit condition that was established after the following:

(i) For nonattainment NSR purposes, December 21, 1976 pursuant to 40 CFR 52.21 or under regulations approved pursuant to 40 CFR Part 51, Subpart I or 40 CFR 51.166.

(ii) For PSD purposes, January 6, 1975 pursuant to 40 CFR 52.21 or under regulations approved pursuant to 40 CFR Part 51, Subpart I or 40 CFR 51.166.

(g) Any change in ownership at a stationary source.

(h) The installation, operation, cessation, or removal of a temporary clean coal technology demonstration project, provided that the temporary clean coal technology demonstration project complies with the following:

(i) The Ohio state implementation plan.

(ii) Other requirements necessary to attain and maintain the national ambient air quality standard during the temporary clean coal technology demonstration project and after it is terminated.

(i) For PSD purposes only, the installation or operation of a permanent clean coal technology demonstration project that constitutes repowering, provided that the project does not result in an increase in the potential to emit of any regulated pollutant emitted by the unit. This exemption shall apply on a pollutant-by-pollutant basis.

(j) For PSD purposes only, the reactivation of a very clean coal-fired electric utility steam generating unit.

(5) This definition shall not apply with respect to a particular regulated NSR pollutant when the major stationary source is complying with the requirements under rule 3745-31-32 of the Administrative Code for a PAL for that pollutant. Instead, the definition under paragraph (JJJJ) of this rule shall apply.

(MMM) "Major source baseline date" means:

(1) In the case of PM10 and sulfur dioxide, January 6, 1975.

(2) In the case of nitrogen dioxide, February 8, 1988.

(3) In the case of PM2.5, October 20, 2010.

(4) The baseline date is established for each pollutant for which increments or other equivalent measures have been established if the following apply:

(a) The area in which the proposed source or modification would construct is designated as attainment or unclassifiable under Section 107(d)(1)(D) or (E) of the Clean Air Act for the pollutant on the date of its complete application under 40 CFR 52.21 or the requirements of rules 3745-31-11 to 3745-31-20 of the Administrative Code.

(b) In the case of a major stationary source, the pollutant would be emitted in significant amounts, or in the case of a major modification, there would be a significant net emissions increase of the pollutant.

(NNN) "Major stationary source" means any stationary source or any group of stationary sources that are described in paragraph (NNN)(1) or (NNN)(2) of this rule except as restricted under paragraphs (NNN)(3) to (NNN)(5) of this rule.

(1) For stationary sources located in a nonattainment area for a given regulated air pollutant:

Any stationary source of air pollutants that emits, or has the potential to emit one hundred tons per year or more of the given regulated NSR pollutant, or

(2) For stationary sources located in an attainment area for a given regulated air pollutant:

(a) Any of the following stationary sources of air pollutants that emits, or has the potential to emit, one hundred tons per year or more of any regulated NSR pollutant:

(i) Fossil fuel-fired steam electric plants of more than two hundred fifty million British thermal units per hour heat input.

(ii) Coal cleaning plants (with thermal dryers).

(iii) Kraft pulp mills.

(iv) Portland cement plants.

(v) Primary zinc smelters.

(vi) Iron and steel mill plants.

(vii) Primary aluminum ore reduction plants.

(viii) Primary copper smelters.

(ix) Municipal incinerators capable of charging more than fifty tons of refuse per day.

(x) Hydrofluoric, sulfuric or nitric acid plants.

(xi) Petroleum refineries.

(xii) Lime plants.

(xiii) Phosphate rock processing plants.

(xiv) Coke oven batteries.

(xv) Sulfur recovery plants.

(xvi) Carbon black plants (furnace process).

(xvii) Primary lead smelters.

(xviii) Fuel conversion plants.

(xix) Sintering plants.

(xx) Secondary metal production plants.

(xxi) Chemical process plants except for ethanol production facilities that produce ethanol by natural fermentation included in NAICS codes 325193 or 312140.

(xxii) Fossil fuel boilers (or combinations thereof) totaling more than two hundred fifty million British thermal units per hour heat input.

(xxiii) Petroleum storage and transfer units with a total storage capacity exceeding three hundred thousand barrels.

(xxiv) Taconite ore processing plants.

(xxv) Glass fiber processing plants.

(xxvi) Charcoal production plants.

(b) Notwithstanding the stationary source size specified in paragraph (NNN)(2)(a) of this rule, any stationary source that emits, or has the potential to emit, two hundred fifty tons per year or more of any regulated NSR pollutant.

(3) A major stationary source that is major for VOCs or nitrogen oxides shall be considered major for ozone.

(4) The fugitive emissions of a stationary source to the extent quantifiable shall not be included in determining for any of the purposes of this rule whether it is a major stationary source, unless the stationary source belongs to one of the following categories of stationary sources:

(a) Coal cleaning plants (with thermal dryers).

(b) Kraft pulp mills.

(c) Portland cement plants.

(d) Primary zinc smelters.

(e) Iron and steel mills.

(f) Primary aluminum ore reduction plants.

(g) Primary copper smelters.

(h) Municipal incinerators capable of charging more than fifty tons of refuse per day.

(i) Hydrofluoric, sulfuric, or nitric acid plants.

(j) Petroleum refineries.

(k) Lime plants.

(l) Phosphate rock processing plants.

(m) Coke oven batteries.

(n) Sulfur recovery plants.

(o) Carbon black plants (furnace process).

(p) Primary lead smelters.

(q) Fuel conversion plants.

(r) Sintering plants.

(s) Secondary metal production plants.

(t) Chemical process plants except for ethanol production facilities that produce ethanol by natural fermentation included in NAICS codes 325193 or 312140.

(u) Fossil-fuel boilers (or combination thereof) totaling more than two hundred fifty million British thermal units per hour heat input.

(v) Petroleum storage and transfer units with a total storage capacity exceeding three hundred thousand barrels.

(w) Taconite ore processing plants.

(x) Glass fiber processing plants.

(y) Charcoal production plants.

(z) Fossil fuel-fired steam electric plants of more than two hundred fifty million British thermal units per hour heat input.

(aa) Any other stationary source category which, as of August 7, 1980, is being regulated under Section 111 or 112 of the Clean Air Act.

(5) Any physical change that would occur at a stationary source not qualifying under paragraph (NNN) of this rule as a major stationary source would be considered a major stationary source, if the change would constitute a major stationary source by itself.

(OOO) "Maximum achievable control technology emission limitation for new sources" or "MACT emission limitation for new sources" means the emission limitation which is not less stringent than the emission limitation achieved in practice by the best controlled similar source, and which reflects the maximum degree of reduction in emissions that the director, taking into consideration the cost of achieving such emission reduction, and any non-air quality health and environmental impacts and energy requirements, determines is achievable by the constructed or reconstructed major MACT source.

(PPP) "Maximum uncontrolled emissions" (only used for express permit-to-install or express PTIO processing) means the amount of emissions from the air contaminant source in tons per year calculated at the maximum operating capacity of the air contaminant source based upon operating eight thousand seven hundred sixty hours per year in the absence of control equipment.

(QQQ) "Minor source baseline date" means the earliest date after the trigger date on which a major stationary source or a major modification subject to 40 CFR 52.21 or the requirements of rules 3745-31-11 to 3745-31-20 of the Administrative Code submits a complete application under the relevant regulations. The trigger date is:

(1) In the case of PM10 and sulfur dioxide, August 7, 1977.

(2) In the case of nitrogen dioxide, February 8, 1988.

(3) In the case of PM2.5, October 20, 2011.

(4) The baseline date is established for each pollutant for which increments or other equivalent measures have been established if the following apply:

(a) The area in which the proposed source or modification would construct is designated as attainment or unclassifiable under Section 107(d)(1)(D) or (E) of the Clean Air Act for the pollutant on the date of its complete

application under 40 CFR 52.21 or the requirements of rules 3745-31-11 to 3745-31-20 of the Administrative Code.

(b) In the case of a major stationary source, the pollutant would be emitted in significant amounts, or in the case of a major modification, there would be a significant net emissions increase of the pollutant.

(5) Any minor source baseline date established originally for the TSP increments shall remain in effect and shall apply for purposes of determining the amount of available PM10 increments, except that the director may rescind any such minor source baseline date where it can be shown, to the satisfaction of the director, that the emissions increase from the major stationary source, or the net emissions increase from the major modification, responsible for triggering that date did not result in a significant amount of PM10 emissions.

(RRR) "Model general permit" means a document that the director has developed that includes a definition of a category of air contaminant source, a description of the qualifications that must be met for that category of source and model terms and conditions that will be used as a general permit for any qualified air contaminant source.

(SSS) "Modify" or "modification" means:

(1) Any physical change in, or change in the method of operation of:

(a) Any air contaminant source that:

(i) Results in an increase in the allowable emissions; or

(ii) Results in an increase in emissions of greater than the de minimis levels in rule 3745-15-05 of the Administrative Code of any type of air contaminant not previously emitted; or

(iii) Results in the relocation of the air contaminant source to a new facility, including, but not limited to, the movement of any existing air contaminant source from another state, county, or other geographic location; or

(iv) Is otherwise defined as a major modification, or is defined as a modification under applicable regulations promulgated by the administrator of the United States environmental protection agency regarding new source performance standards or national emission standards for hazardous pollutants, or is either a new source or a reconstruction under applicable rules promulgated by the administrator under Section 112 of the Clean Air Act.

(v) 'Modify' or 'modification' shall not include routine maintenance, routine repair, and routine replacement; use of an alternate fuel or raw material that the source is capable of accommodating and is not

expressly prohibited from using under any permit condition or applicable requirement of the Clean Air Act; an increase in the hours of operation or in the production rate that is not expressly prohibited under any permit condition or applicable requirement of the Ohio environmental protection agency or the Clean Air Act.

(vi) 'Modify' or 'modification' shall not include pollution control or pollution prevention projects that the director has determined, in writing, are environmentally beneficial. Environmentally beneficial projects do not include those that cause or contribute to a violation of a national ambient air quality standard, cause or contribute to a violation of an increment per paragraph (B) of rule 3745-31-11 of the Administrative Code, adversely impact a visibility limitation, or are expressly prohibited under any Ohio environmental protection agency or Clean Air Act permit condition or applicable requirement.

(vii) 'Modify' or 'modification' shall not include allowable emission increases due to an alternative emission limit that satisfies the criteria set forth in division (E) of section 3704.03 of the Revised Code and is consistent with division (K) of section 3704.036 of the Revised Code.

(b) Any significant air contaminant source project that, for the specific air contaminant or air contaminants for which the air contaminant source project is classified as a significant air contaminant source project, results in an increase in the ambient air quality impact of the air contaminant source project greater than the following levels as determined by atmospheric dispersion modeling or by another method acceptable to the director:

(i) Carbon monoxide - five hundred seventy-five $\mu g/m^3$, eight-hour average.

(ii) Nitrogen dioxide - fourteen $\mu g/m^3$, annual average.

(iii) Directly emitted particulate matter less than 2.5 microns (PM2.5)- four µg/m3, twenty-four-hour average.

(iv) Particulate matter less than ten microns (PM10) - ten µg/m3, twenty-four-hour average.

(v) Sulfur dioxide - thirteen µg/m3, twenty-four-hour average.

(vi) Lead - 0.1 µg/m3, three-month average.

(TTT) "Municipal solid waste landfill" or "MSW landfill" means, as defined under paragraph (B)(14) of rule 3745-76-01 of the Administrative Code, an entire disposal facility in a contiguous geographical space where municipal solid waste is placed and regulated in accordance with Chapters 3745-27 and 3745-37 of the

Administrative Code and excludes scrap tire monofills. A MSW landfill may also receive other types of Resource Conservation and Recovery Act (RCRA) Subtitle D wastes (rule 3745-50-10 of the Administrative Code) such as commercial solid waste, nonhazardous sludge, and industrial solid waste. Portions of a MSW landfill may be separated by access roads. A MSW landfill may be publicly or privately owned. A MSW landfill may be a new MSW landfill or existing MSW landfill.

(UUU) "Necessary pre-construction approvals or permits" means those permits or approvals required under federal air pollution control laws and regulations and those air pollution control laws and regulations that are part of the federally approved Ohio state implementation plan.

(VVV) "Net emissions increase" means, with respect to any regulated NSR pollutant emitted by a major stationary source, the amount by which the sum of the following, except as limited by paragraph (VVV)(3) of this rule, exceeds zero:

(1) Any increase in emissions from a particular physical change or change in the method of operation at a stationary source as calculated under this rule; and

(2) Any other increases and decreases in actual emissions at the stationary source that are contemporaneous with the particular change and are otherwise creditable. Baseline actual emissions for calculating increases and decreases under paragraph (VVV) of this rule shall be determined as provided in paragraph (O) of this rule, except that paragraphs (O)(1)(c) and (O)(2)(d) of this rule shall not apply.

(3) The following subparagraphs limit paragraphs (VVV)(1) and (VVV)(2) of this rule:

(a) An increase or decrease in actual emissions is contemporaneous with the increase from the particular change only if it occurs within the period beginning five years prior to the date on which the owner or operator of the facility expects construction to commence, as stated in the initial complete application for an installation permit for a new or modified emission unit for the particular change or project, and ending on the date when the new or modified emissions unit becomes operational and begins to emit a pollutant.

(b) An increase or decrease in actual emissions is creditable only if the director has not relied on it in issuing a permit for the stationary source under regulations approved pursuant to this rule, which permit is in effect when the increase in actual emissions from the particular change occurs.

(c) For PSD purposes only, an increase or decrease in actual emissions of sulfur dioxide, nitrogen oxide, or particulate matter that occurs before the applicable minor source baseline date is creditable only if it is required to be considered in calculating the amount of maximum

allowable increases remaining available. Only PM10 emissions shall be used to evaluate the net emissions increase for PM10.

(d) An increase in actual emissions is creditable only to the extent that the new level of actual emissions exceeds the old level.

(e) A decrease in actual emissions is creditable only if the following apply:

(i) The old level of actual emissions or the old level of allowable emissions, whichever is lower, exceeds the new level of actual emissions.

(ii) The decrease is enforceable as a practical matter at and after the time that actual construction on the particular change begins.

(iii) The decrease has approximately the same qualitative significance for public health and welfare as that attributed to the increase from the particular change.

(iv) For nonattainment NSR purposes only, the director has not relied on it in issuing any permit under regulations pursuant to 40 CFR Part 51, Subpart I or the director has not relied on it in demonstrating attainment or reasonable further progress.

(f) An increase that results from a physical change at a stationary source occurs when the emissions unit on which construction occurred becomes operational and begins to emit a particular air pollutant. Any replacement unit that requires shakedown becomes operational only after a reasonable shakedown period, not to exceed one hundred eighty days.

(g) Paragraph (C)(1) of this rule shall not apply for determining creditable increases and decreases or after a change.

(WWW) "New source" means any air contaminant source for which an owner or operator undertakes a continuing program of installation or modification or enters into a binding contractual obligation to undertake and complete, within a reasonable time, a continuing program of installation or modification, after January 1, 1974, and that at the time of installation or modification, would have otherwise been subject to the provisions of this chapter. The replacement of an entire air contaminant source is considered a new source.

(XXX) "New source review project" or "NSR project" means a physical change in, or change in the method of operation of, an existing major stationary source for which a permit-to-install or a permit-to-install and operate is required.

(YYY) "Nonattainment" or "nonattainment area," for a given pollutant, for purposes of determining applicability of this chapter, means that the area has been designated as nonattainment in 40 CFR 81.336.

(ZZZ) "Nonattainment new source review permit" or "nonattainment NSR permit" means any permit that is issued under a major source preconstruction permit program that has been approved by the administrator and incorporated into a plan to implement the requirements of 40 CFR 51.165, or a program that implements 40 CFR Part 51, Appendix S, Sections I through VI.

(AAAA) "Non-heatset" means an offset lithographic printing process where the printing inks dry by oxidation and absorption without the use of heat. For the purposes of this chapter, ultraviolet-cured (UV) and electron beam-cured inks employed in an offset lithographic printing process are considered non-heatset.

(BBBB) "Non-methane organic compound" or "NMOC" has the same meaning as found in paragraph (B)(16) of rule 3745-76-01 of the Administrative Code.

(CCCC) "Non-road engine" means, as defined under 40 CFR 89.2:

(1) Except as discussed in paragraph (CCCC)(2) of this rule, a non-road engine is any internal combustion engine:

(a) In or on a piece of equipment that is self-propelled or serves a dual purpose by both propelling itself and performing another function (such as garden tractors, off-highway mobile cranes and bulldozers); or

(b) In or on a piece of equipment that is intended to be propelled while performing its function (such as lawnmowers and string trimmers); or

(c) That, by itself or in or on a piece of equipment, is portable or transportable, meaning designed to be and capable of being carried or moved from one location to another. Indicia of transportability include, but are not limited to, wheels, skids, carrying handles, dolly, trailer, or platform.

(2) An engine is not a non-road engine if any of the following apply:

(a) The engine is used to propel a motor vehicle or a vehicle used solely for competition, or is subject to standards promulgated under Section 202 of the Clean Air Act.

(b) The engine is regulated by a federal new source performance standard promulgated under Section 111 of the Clean Air Act.

(c) The engine otherwise included in paragraph (CCCC)(1)(c) of this rule remains or will remain at a location for more than twelve consecutive months or a shorter period of time for an engine located at a seasonal source. A location is any single site at a building, structure, facility, or installation. Any engine (or engines) that replaces an engine at a location and that is intended to perform the same or similar function as the engine replaced will be included in calculating the consecutive time period. An engine located at a seasonal source is an engine that remains at a

seasonal source during the full annual operating period of the seasonal source. A seasonal source is a stationary source that remains in a single location on a permanent basis (i.e., at least two years) and that operates at that single location approximately three months (or more) each year. This paragraph does not apply to an engine after the engine is removed from the location.

(d) Engines used in aircraft as defined in 40 CFR 87.1(a).

(e) Engines used in underground mining or engines used in underground mining equipment and regulated by the "Mining Safety and Health Administration" (MSHA) in 30 CFR Parts 7, 36, 56, 57, 70, and 75.

(f) Engines subject to the standards of 40 CFR Part 92 (engines exempted from the requirements of 40 CFR Part 92 under 40 CFR 92.907 are subject to the requirements of 40 CFR Part 89).

(g) Engines used in marine vessels as defined in 1 USC 3, if those engines have a rated power at or above thirty-seven kilowatts.

(h) Engines with a per cylinder displacement of less than fifty cubic centimeters.

(DDDD) "Ohio state implementation plan" means the plan submitted by the state of Ohio to, and approved by, the United States environmental protection agency in response to Section 110 of the Clean Air Act.

(EEEE) "Organic compounds" or "OC" means any chemical compound containing carbon, excluding carbon monoxide, carbon dioxide, carbonic acid, metallic carbides, metallic carbonates, ammonium carbonate, non landfill gas methane and ethane.

(FFFF) "PAL allowable emissions" means allowable emissions as defined in this rule, except as this definition is modified under this paragraph.

(1) The allowable emissions for any emissions unit shall be calculated considering any emission limitations that are enforceable as a practical matter on the emissions unit's potential to emit.

(2) An emissions unit's potential to emit shall be determined using the definition in paragraph (BBBBB) of this rule, except that the words or enforceable as a practical matter should be added after federally enforceable.

(GGGG) "PAL effective date" generally means the date of issuance of the PAL permit. However, the PAL effective date for an increased PAL is the date any emissions unit, which is part of the PAL major modification, becomes operational and begins to emit the PAL pollutant.

(HHHH) "PAL effective period" means the period beginning with the PAL effective date and ending ten years later.

(IIII) "PAL major emissions unit" means either of the following:

(1) Any emissions unit that emits or has the potential to emit one hundred tons per year or more of the PAL pollutant in an attainment area.

(2) Any emissions unit that emits or has the potential to emit the PAL pollutant in an amount that is equal to or greater than the major source threshold for the PAL pollutant as defined by the Clean Air Act for nonattainment areas. For example, in accordance with the definition of major stationary source in Section 182(c) of the Clean Air Act, an emissions unit would be a PAL major emissions unit for VOC if the emissions unit is located in a serious ozone nonattainment area and it emits or has the potential to emit fifty or more tons of VOC per year.

(JJJJ) "PAL major modification" means, notwithstanding this rule (the definitions for major modification and net emissions increase), any physical change in or change in the method of operation of the PAL source that causes it to emit the PAL pollutant at a level equal to or greater than the PAL.

(KKKK) "PAL permit" means the permit-to-install issued by the director that establishes, incorporates or modifies a PAL for a major stationary source.

(LLLL) "PAL pollutant" means the pollutant for which a PAL is established at a major stationary source.

(MMMM) "PAL significant emissions unit" means an emissions unit that emits or has the potential to emit a PAL pollutant in an amount that is equal to or greater than the significant level as defined in this rule or in the Clean Air Act whichever is lower for that PAL pollutant, but less than the amount that would qualify the unit as a PAL major emissions unit as defined in this rule.

(NNNN) "PAL small emissions unit" means an emissions unit that emits or has the potential to emit the PAL pollutant in an amount less than the significant level for that PAL pollutant, as defined in this rule or in the Clean Air Act, whichever is lower.

(OOOO) "Particulate matter" shall have the same meaning as found in rule 3745-17-01 of the Administrative Code.

(PPPP) "Particulate matter emissions" shall have the same meaning as found in rule 3745-17-01 of the Administrative Code.

(QQQQ) "Permanent" means that emission reductions used to offset emission increases are assured for the life of the corresponding increase through a federally enforceable mechanism, through restrictions that are legally and practically enforceable by the state, or because emissions are no longer physically or operationally possible, whether the corresponding increase is limited or unlimited in duration.

(RRRR) "Person" means the federal government or any agency thereof, the state or any agency thereof, any political subdivision, or any agency thereof, or any public or private corporation, individual, partnership, or other entity.

(SSSS) "Plantwide applicability limitation" or "PAL" means an emission limitation expressed in tons per year, for a pollutant at a major stationary source, that is enforceable as a practical matter and established source-wide in accordance with paragraphs (A)(1) to (A)(13) of rule 3745-31-32 of the Administrative Code.

(TTTT) "PM2.5" means particulate matter with an aerodynamic diameter less than or equal to a nominal 2.5 micrometers as measured by a reference method based on 40 CFR Part 50 Appendix L and designated in accordance with 40 CFR Part 53 or an equivalent method designated in 40 CFR Part 53.

(UUUU) "PM2.5 direct emissions" means solid particles, with an aerodynamic diameter less than or equal to nominal 2.5 micrometers, emitted directly from an air emissions source or activity, or gaseous emissions or liquid droplets from an air emissions source or activity which condense to form particulate matter at ambient temperatures. Direct PM2.5 emissions include elemental carbon, directly emitted organic carbon, directly emitted sulfate, directly emitted nitrate, and other inorganic particles (including but not limited to crustal material, and metals).

(VVVV) "PM2.5 emissions" means finely divided solid or liquid material, with an aerodynamic diameter less than or equal to nominal 2.5 micrometers that is or has been emitted to the ambient air as measured by an applicable reference method, or an equivalent or alternative method, specified in 40 CFR Part 51, Appendix M.

(WWWW) "PM2.5 precursor" means those air pollutants other than PM2.5 direct emissions that Ohio EPA has demonstrated with USEPA approval, significantly contribute to the formation of PM2.5 in a specific area. PM2.5 precursors include sulfur dioxide and nitrogen oxides.

(XXXX) "PM10" means particulate matter with an aerodynamic diameter less than or equal to a nominal ten micrometers as measured by a reference method based on 40 CFR Part 50, Appendix J and designated in accordance with 40 CFR Part 53 or an equivalent method designated in 40 CFR Part 53.

(YYYY) "PM10 emissions" means finely divided solid or liquid material, with an aerodynamic diameter less than or equal to a nominal ten micrometers that is or has been emitted to the ambient air as measured by an applicable reference method, or an equivalent or alternative method, specified in 40 CFR Part 51, Appendix M.

(ZZZZ) "Pollution prevention" means any activity that through process changes, product reformulation or redesign, or substitution of less polluting raw materials, eliminates or reduces the release of air pollutants (including fugitive emissions) and other pollutants to the environment prior to recycling, treatment, or disposal;

it does not mean recycling (other than certain in-process recycling practices), energy recovery, treatment, or disposal.

(AAAAA) "Portable source" means an air contaminant source that, in the director's judgment, is specifically designed to be transferred to a new site as needs warrant.

(BBBBB) "Potential to emit" means the maximum capacity of an emissions unit or stationary source to emit an air pollutant under its physical and operational design. Any physical or operational limitation on the capacity of the emissions unit or stationary source to emit an air pollutant, which includes any federally regulated air pollutant as defined in paragraph (DD) of rule 3745-77-01 of the Administrative Code, including air pollution control equipment and restrictions on hours of operation or on the type or amount of material combusted, stored or processed, shall be treated as part of its design if the limitation or the effect it would have on emissions is federally enforceable or legally and practicably enforceable by the state. Secondary emissions do not count in determining the potential to emit of a stationary source.

(CCCCC) "Predictive emissions monitoring system" or "PEMS" means all of the equipment necessary to monitor process and control device operational parameters (for example, control device secondary voltages and electric currents) and other information (for example, gas flow rate, oxygen or carbon dioxide concentrations), and calculate and record the mass emission rate (for example, pounds per hour) on a continuous basis.

(DDDDD) "Prevention of significant deterioration increment" or "PSD increment" means an allowable increment specified in paragraph (B) of rule 3745-31-11 of the Administrative Code.

(EEEEE) "Prevention of significant deterioration permit" or "PSD permit" means any permit that is issued under a major source preconstruction permit program that has been approved by the administrator and incorporated into the plan to implement the requirements of 40 CFR 51.166, or under the program in 40 CFR 52.21.

(FFFFF) "Process or production unit" means any collection of structures and/or equipment that processes, assembles, applies, or otherwise uses material inputs to produce or store an intermediate or final product. A single facility may contain more than one process or production unit.

[Comment: The definition of a process or production unit can be determined by the intermediate product of a process. For example, at a plant which manufactures fiberglass reinforced plastic boats, the owners wish to add more spray guns to an existing fabrication line to supplement existing spray guns in laminating a particular model of boat hulls. The new spray guns will have a potential to emit greater than ten tons per year of a single HAP. In this example, the fiberglass hull of a boat is an intermediate product in the manufacture of a

final product (a boat). The collection of equipment needed to manufacture the intermediate product includes the new spray guns, the existing spray guns, the laminating operation, and other supporting equipment. Because the new spray guns in and of themselves do not produce the intermediate product, they are not in and of themselves a process or production unit, and therefore are not subject to review under rule 3745-31-28 of the Administrative Code. Other examples of the applicability of this definition are found at 61 Fed. Reg. 68391-68392 (December 27, 1996).]

(GGGGG) "Projected actual emissions" means, the maximum annual rate, in tons per year, at which an existing emissions unit is projected to emit a regulated NSR pollutant in any one of the five years (twelve-month period) following the date the emissions unit resumes regular operation after the NSR project, or in any one of the ten years following that date, if the NSR project involves increasing the emissions unit's design capacity or its potential to emit of that regulated NSR pollutant and full utilization of the emissions unit would result in a significant emissions increase or a significant net emissions increase at the major stationary source.

In determining the projected actual emissions under this rule before beginning actual construction, the owner or operator of the major stationary source shall do the following:

(1) Consider all relevant information, including but not limited to, historical operational data, the company's own representations, the company's expected business activity and the company's highest projections of business activity, the company's filings with the state or federal regulatory authorities, and compliance plans under the approved plan; and

(2) Include fugitive emissions to the extent quantifiable, and emissions associated with startups, shutdowns, and malfunctions; and

(3) Exclude, in calculating any increase in emissions that results from the particular NSR project, that portion of the emissions unit's emissions following the NSR project that an existing emissions unit could have accommodated during the consecutive twenty-four-month period used to establish the baseline actual emissions under paragraph (O) of this rule and that are also unrelated to the particular NSR project, including any increased utilization due to product demand growth; or,

(4) In lieu of using the method set out in paragraphs (GGGGG)(1) to (GGGGG)(3) of this rule, may elect to use the emissions unit's potential to emit, in tons per year, as defined under paragraph (BBBBB) of this rule.

(HHHHH) "PTIO" or "permit-to-install and operate" means a permit-to-install and a permit-to-operate applicable to air contaminant sources not located at facilities subject to Chapter 3745-77 of the Administrative Code.

(IIIII) "Publicly owned treatment works" or "POTW" means any device or system used in the treatment (including recycling and reclamation) of domestic sewage or industrial waste of a liquid nature that is owned by a municipality, county or state entity or any public body created under state law that has authority over disposal of sewage.

(JJJJJ) "Quantifiable" means that the amount, rate and characteristics of emissions and emission reductions can be determined or measured through a reliable and replicable method.

(KKKKK) "Reactivation of a very clean coal-fired electric utility steam generating unit" means any physical change or change in the method of operation associated with the commencement of commercial operations by a coal-fired utility unit after a period of discontinued operation where the following apply:

(1) The unit has not been in operation for the two-year period prior to the enactment of the Clean Air Act Amendments of 1990, and the emissions from such unit continue to be carried in the permitting authority's emission inventory at the time of enactment;

(2) The unit was equipped prior to shutdown with a continuous system of emission control that achieves a removal efficiency for sulfur dioxide of no less than eighty-five per cent and a removal efficiency for particulates of no less than ninety-eight per cent;

(3) The unit is equipped with low-NO_x burners prior to the time of commencement of operations following reactivation; and

(4) The unit is otherwise in compliance with the requirements of the Clean Air Act.

(LLLLL) "Reconstruct a major MACT source" means the replacement of components at an existing process or production unit that in and of itself emits or has the potential to emit ten tons per year or more of any HAP or twenty-five tons per year or more of any combination of HAPs, whenever the following occur:

(1) The fixed capital cost of the new components exceeds fifty per cent of the fixed capital cost that would be required to construct a comparable process or production unit.

(2) It is technically and economically feasible for the reconstructed major source to meet the applicable MACT emission limitation for new sources established under rule 3745-31-28 of the Administrative Code.

(MMMMM) "Reduced sulfur compounds" or "RSC" means, as defined under 40 CFR Part 60, Subpart J, the sum of the sulfur compounds hydrogen sulfide, carbonyl sulfide and carbon disulfide.

(NNNNN) "Regulated NSR pollutant" means the following:

(1) For stationary sources located in a nonattainment area for a given regulated air pollutant. :

(a) Nitrogen oxides or any VOCs.

(b) Any pollutant for which a national ambient air quality standard has been promulgated.

(c) Any pollutant that is identified under this paragraph as a constituent or precursor of a general pollutant listed under paragraph (NNNNN)(1)(a) or (NNNNN)(1)(b) of this rule, provided that such constituent or precursor pollutant may only be regulated under NSR as part of regulation of the general pollutant. Precursors identified by the director for purposes of new source review are the following:

(i) VOCs and nitrogen oxides are precursors to ozone in all ozone nonattainment areas.

(ii) Sulfur dioxide is a precursor to PM2.5 in all PM2.5 nonattainment areas.

(iii) Nitrogen oxides are a precursor to PM2.5 in all PM2.5 nonattainment areas.

(d) PM2.5 emissions and PM10 emissions shall include gaseous emissions from a source or activity which condense to form particulate matter at ambient temperatures. On or after January 1, 2011, such condensable particulate matter shall be accounted for in applicability determinations and in establishing emissions limitations for PM2.5 and PM10 in nonattainment new source review permits. Compliance with emissions limitations for PM2.5 and PM10 issued prior to this date shall not be based on condensable particulate matter unless required by the terms and conditions of a permit or the Ohio state implementation plan. Applicability determinations made prior to this date without accounting for condensable particulate matter shall not be considered in violation of this chapter unless the Ohio state implementation plan required condensable particulate matter to be included.

(2) For stationary sources located in an attainment area for a given regulated air pollutant, the following:

(a) Any pollutant for which a national ambient air quality standard has been promulgated. This includes, but is not limited to, the following:

(i) PM2.5 emissions, and PM10 emissions shall include gaseous emissions from a source or activity which condense to form particulate matter at ambient temperatures. On or after January 1, 2011, such condensable particulate matter shall be accounted for in applicability determinations and in establishing emissions limitations

for PM2.5 and PM10 in PSD permits. Compliance with emissions limitations for PM2.5 and PM10 issued prior to this date shall not be based on condensable particular matter unless required by the terms and conditions of the permit or the applicable implementation plan. Applicability determinations made prior to this date without accounting for condensable particular matter shall not be considered in violation of this section unless the applicable implementation plan required condensable particular matter to be included.

(ii) Any pollutant identified under this paragraph as a constituent or precursor to a pollutant for which a national ambient air quality standard has been promulgated. Precursors identified for purposes of new source review are the following:

(a) VOCs and nitrogen oxides are precursors to ozone in all ozone attainment and unclassifiable areas.

(b) Sulfur dioxide is a precursor to PM2.5 in all attainment and unclassifiable areas.

(c) Nitrogen oxides are a precursor to PM2.5 in all attainment and unclassifiable areas.

(b) Any pollutant that is subject to any standard promulgated under Section 111 of the Clean Air Act;

(c) Any Class I or II substance subject to a standard promulgated under or established by Title VI of the Clean Air Act; or

(d) Any pollutant that otherwise is subject to regulation under the Clean Air Act; except that any or all HAPs either listed in Section 112 of the Clean Air Act or added to the list pursuant to Section 112(b)(2) of the Clean Air Act, which have not been delisted pursuant to Section 112(b)(3) of the Clean Air Act, are not regulated NSR pollutants unless the listed HAP is also regulated as a constituent or precursor of a general pollutant listed under Section 108 of the Clean Air Act.

(OOOOO) "Replacement unit" means an emissions unit for which all the criteria listed under this paragraph are met. No creditable emission reductions shall be generated from shutting down the existing emissions unit that is replaced.

(1) The emissions unit is a reconstructed unit within the meaning of 40 CFR 60.15(b)(1), or the emissions unit completely takes the place of an existing emissions unit.

(2) The emissions unit is identical to or functionally equivalent to the replaced emissions unit.

(3) The replacement does not alter the basic design parameters of the process unit.

(4) The replaced emissions unit is permanently removed from the major stationary source, otherwise permanently disabled, or permanently barred from operation by a permit that is enforceable as a practical matter. If the replaced emissions unit is brought back into operation, it shall constitute a new emissions unit.

(PPPPP) "Repowering" means:

(1) Replacement of an existing coal-fired boiler with one of the following clean coal technologies: atmospheric or pressurized fluidized bed combustion, integrated gasification combined cycle, magnetohydrodynamics, direct and indirect coal-fired turbines, integrated gasification fuel cells, or as determined by the administrator, in consultation with the secretary of energy, a derivative of one or more of these technologies, and any other technology capable of controlling multiple combustion emissions simultaneously with improved boiler or generation efficiency and with significantly greater waste reduction relative to the performance of technology in widespread commercial use as of November 15, 1990.

(2) Repowering shall also include any oil and/or gas-fired unit which has been awarded clean coal technology demonstration funding as of January 1, 1991, by the department of energy.

(3) The director shall give expedited consideration to permit applications for any source that satisfies the requirements of this rule and is granted an extension under Section 409 of the Clean Air Act.

(QQQQQ) "Research and development activity" means an activity conducted at a research or laboratory facility whose primary purpose is to conduct research and development into new processes and products, where such a source is operated under the close supervision of technically trained personnel and is not engaged in the manufacture of products for sale or exchange for commercial profit, except in a de minimis manner.

(RRRRR) "Screen printing line" means a printing process where the printing ink passes through a web or a fabric to which a refined form of stencil has been applied. The stencil openings determine the form and dimensions of the imprint.

(SSSSS) "Secondary emissions" means emissions that occur as a result of the construction or operation of a major stationary source or major modification, but do not come from the major stationary source or major modification itself. For the purpose of this rule, secondary emissions must be specific, well defined, quantifiable, and impact the same general areas as the stationary source or major modification that causes the secondary emissions. Secondary emissions include emissions from any off-site support operation that would not be constructed or increase their emissions except as a result of the construction or operation of the major stationary source or major modification. Secondary emissions do not

include any emissions that come directly from a mobile source, such as emissions from the tailpipe of a motor vehicle, from a train or from a vessel.

(TTTTT) "Semi-public disposal system" means a disposal system which treats the sanitary sewage discharged from publicly or privately owned buildings or place of assemblage, entertainment, recreation, education, correction, hospitalization, housing or employment, but does not include a disposal system which treats sewage in amounts of more than twenty-five thousand gallons per day; a disposal system for the treatment of sewage that is exempt from the requirements of division (F) of section 6111.04 of the Revised Code; or a disposal system for the treatment of industrial waste.

(UUUUU) "Significant air contaminant source" or "significant air contaminant source project" means any air contaminant source, or air contaminant source project, that emits the following:

(1) Greater than one hundred tons per year of any of the following air contaminants:

(a) PM10.

(b) PM2.5.

(c) Sulfur dioxide.

(d) Nitrogen oxides.

(e) OCs.

(2) Greater than one thousand tons per year of carbon monoxide.

(3) Greater than two tons per year of lead.

(VVVVV)

(1) "Significant" means, in reference to a net emissions increase or the potential of a stationary source to emit any of the following air pollutants, a rate of emissions that would equal or exceed any of the following rates:

Air Pollutant	Emission Rate (Ton/Yr)
Carbon monoxide	100
Nitrogen oxides	40
Sulfur dioxide	40
Particulate matter	25
PM10	15
PM2.5	10 (of direct PM2.5 emissions); 40 (sulfur

	dioxide emissions); 40 (nitrogen oxides emissions)
Ozone (VOCs or nitrogen oxides)	40
Lead	0.6
Fluorides (excluding hydrogen fluoride)	3
Sulfuric acid mist	7
Hydrogen sulfide	10
TRS	10
RSCs	10
NMOCs from municipal waste landfills	50

(a) Municipal waste combustor organic (measured as total tetra- through octa-chlorinated dibenzo-p-dioxins and dibenzofurans): 3.2 grams per year (0.007055 pounds per year).

(b) Municipal waste combustor metals (measured as particulate matter): fourteen megagrams per year (fifteen tons per year).

(c) Municipal waste combustor acid gases (measured as sulfur dioxide and hydrogen chloride): thirty-six megagrams per year (forty tons per year).

(2) "Significant", in reference to a net emissions increase or the potential of a stationary source to emit a regulated NSR pollutant that the air pollutant and emission rate table in paragraph (VVVVV)(1) of this rule does not list, any emission rate.

(3) Notwithstanding paragraph (VVVVV)(1) of this rule, "significant" means any emission rate or any net emissions increase associated with a major stationary source or major modification that would be constructed within ten kilometers of a Class I area, and have an impact on such area equal to or greater than one microgram per cubic meter (twenty-four hour average).

(WWWWW) "Significant emissions increase" means, for a regulated NSR pollutant, an increase in emissions that is significant, as defined in this rule, for that pollutant.

(XXXXX) "Similar source" means a stationary source or process that has comparable emissions and is structurally similar in design and capacity to a constructed or reconstructed major MACT source such that the source could be controlled using the same control technology.

(YYYYY) "Soil-liquid extraction remediation activities" means soil remediation activities that use a process for physically separating (extracting) groundwater from soils contaminated with low levels of organic species or other pollutants that are moderately soluble in an aqueous phase using a trench dug around or along side the contaminated soil perpendicular to the groundwater's down gradient flow direction. The contaminated groundwater is collected in the trench and transferred out of the trench for further treatment to separate the soluble

contaminants from the water and to destroy the contaminants in an air pollution control system.

(ZZZZZ) "Soil-vapor extraction remediation activities" means soil remediation activities that use a process for physically separating (extracting) contaminates that are VOCs and semivolatile organic compounds from unsaturated soils by placing a porous tube (or tubes) under vacuum in the contaminated soil, and when a vacuum is drawn on the tube, vapor and some groundwater are drawn into the tube. The vapors collected through the vacuum system are then sent to an air pollution control system to destroy the organic contaminants.

(AAAAAA) "Stationary source" means all of the emissions units that belong to the same industrial grouping, are located on one or more contiguous or adjacent properties, and are under the control of the same person (or persons under common control) except the activities of any vessel and those emissions resulting directly from an internal combustion engine for transportation purposes or from a non-road engine or non-road vehicle as defined in Section 216 of the Clean Air Act. Emissions units shall be considered as part of the same industrial grouping if they belong to the same major group (i.e., that have the same two-digit code) as described in the "Standard Industrial Classification Manual."

(BBBBBB) "Surplus" means emission reductions made below an applicable source baseline which conform to the following:

(1) Are below allowable emission rates.

(2) The state of Ohio has not relied on the emission reduction in a required attainment demonstration of a national ambient air quality standard or a demonstration of reasonable further progress.

(3) The director has not relied on the emission reduction in issuing any permit under this chapter.

(4) Is not required by any applicable laws.

Emission reductions can be used for offsets or emission reduction credits to the extent allowed under state or federal law.

(CCCCCC) "Temporary clean coal technology demonstration project" means a clean coal technology demonstration project that is operated for a period of five years or less, and which complies with the state implementation plan for the state in which the clean coal technology demonstration project is located and other requirements necessary to attain and maintain the national ambient air quality standards during the clean coal technology demonstration project and after it is terminated.

(DDDDDD) "Temporary source" means any new source of air contaminants or modification of an air contaminant source, which will cease operation, be

relocated, or obtain a new permanent permit-to-install within two years of beginning operation.

(EEEEEE) "Title I modification" means any modification under Section 111 or 112 of the Clean Air Act and any major modification under Parts C or D of Title I of the Clean Air Act.

(FFFFFF) "Total reduced sulfur" or "TRS" means, as defined under paragraph (L) of rule 3745-73-01 of the Administrative Code, the sum of the sulfur compounds hydrogen sulfide, methyl mercaptan, dimethyl sulfide and dimethyl disulfide, that are measured by methods specified in rule 3745-73-04 of the Administrative Code.

(GGGGGG) "Truck" means every motor vehicle, except trailers and semitrailers, designed and used to carry property and having a gross vehicle weight rating of ten thousand pounds or less.

(HHHHHH) "$\mu g/m^3$" means microgram per cubic meter.

(IIIIII) "Volatile organic compounds" or "VOC" shall have the same meaning as defined in rule 3745-21-01 of the Administrative Code.

(JJJJJJ) "Water-based ink/coating/adhesive" means an ink, coating or adhesive with a VOC content less than or equal to ten per cent by weight as applied.

(KKKKKK) "Water-borne" means a material in which the water content of the volatile fraction is at least ninety-five per cent by weight.

(LLLLLL) Referenced materials. This chapter includes references to certain subject matter or materials. The text of the referenced materials is not included in the rules contained in this chapter. Information on the availability of the referenced materials as well as the date of and/or the particular edition or version of the material is included in this rule. For materials subject to change, only the specific version specified in this rule are referenced. Material is referenced as it exists on the effective date of this rule. Except for subsequent annual publication of existing (unmodified) Code of Federal Regulation compilations, any amendment or revision to a referenced document is not referenced unless and until this rule has been amended to specify the new dates.

(1) Availability. The referenced materials are available as follows:

(a) Aerometric information retrieval system (AIRS). Information can be obtained by writing to: "Air Facility System (OECA), Office of Enforcement and Compliance Assurance, 1200 Pennsylvania Ave. NW, mail code 2222A, Washington, D.C. 20460-0001," by calling 1-800-367-1044, or by visiting their web site at http://www.epa.gov/enviro/facts/afs/search.html.

(b) California air resources board (CARB) certification. Information and copies of executive orders, approval letters, equipment advisories, and equivalent test procedures may be obtained by writing to: "California Air Resources Board, Monitoring and Laboratory Division, P.O. Box 2815, Sacramento, CA, 95812-2815" or by calling (916) 327-0900. The full text of all CARB certification documents are also available in electronic format at http://www.arb.ca.gov/vapor/vapor.htm.

(c) Chemical abstract service (CAS). Information can be obtained by writing to: "Chemical Abstract Service, 2540 Olentangy River Road, Columbus, Ohio, 43202," or by visiting their web site at www.cas.org.

(d) Chemical rubber company (CRC) handbook of chemistry and physics. Information and copies may be obtained by writing to "CRC Press LLC, 2000 NW Corporate Blvd., Boca Raton, Florida, 33431", by calling 1-800-272-7737, or at http://www.crcpress.com/. A copy of this book is also available for inspection and use at most public libraries and "The State Library of Ohio."

(e) Clean Air Act. Information and copies may be obtained by writing to: "Superintendent of Documents, Attn: New Orders, PO Box 371954, Pittsburgh, PA 15250-7954." The full text of the act is also available in electronic format at www.epa.gov/oar/caa/text.html. A copy of the act is also available for inspection and use at most public libraries and "The State Library of Ohio."

(f) Code of Federal Regulations (CFR). Information and copies may be obtained by writing to: "Superintendent of Documents, Attn: New Orders, PO Box 371954, Pittsburgh, PA 15250-7954." The full text of the CFR is also available in electronic format at http://www.ecfr.gov. The CFR compilations are also available for inspection and use at most public libraries and "The State Library of Ohio."

(g) Compilation of air pollutant emission factors, AP-42. Information and copies may be obtained by writing to: "Superintendent of Documents, Attn: New Orders, PO Box 371954, Pittsburgh, PA 15250-7954." The full text of the compilation of air pollutant emission factors, AP-42, is also available in electronic format at http://www.epa.gov/ttn/chief/ap42/index.html. The compilation of air pollutant emission factors, AP-42, are also available for inspection and use at most public libraries and "The State Library of Ohio."

(h) Comprehensive Environmental Response, Compensation, and Liability Act (CERCLA). Information and copies may be obtained by writing to: "Superintendent of Documents, Attn: New Orders, PO Box 371954, Pittsburgh, PA 15250-7954." The full text of the act is also available in electronic format at http://www.epa.gov/lawsregs/laws/cercla.html. A

copy of the act is also available for inspection and use at most public libraries and "The State Library of Ohio."

(i) Control technology center. Information can be obtained by writing to: "Research Triangle Institute, Research Triangle Park, NC, 27709," by calling 1-919-541-2734, or by visiting their web site at http://www.epa.gov/etv/centers/center5.html.

(j) Federal Power Act. Information and copies may be obtained by writing to: "Superintendent of Documents, Attn: New Orders, PO Box 371954, Pittsburgh, PA 15250-7954." The full text of the act is also available in electronic format at http://www.fws.gov/laws/lawsdigest/fedpowr.html. A copy of the act is also available for inspection and use at most public libraries and "The State Library of Ohio."

(k) Federal Register. Information and copies may be obtained by writing to: "Superintendent of Documents, Attn: New Orders, PO Box 371954, Pittsburgh, PA 15250-7954." Online access to the Federal Register is available at http://www.gpo.gov/fdsys/browse/collection.action?collectionCode=FR. A copy of the Federal Register is also available for inspection and use at most public libraries and "The State Library of Ohio."

(l) Great lakes binational toxics strategy. Information can be obtained by writing to: "U.S. Environmental Protection Agency, Great Lakes National Program Office, 77 W. Jackson Boulevard (G-17J), Chicago, Illinois, 60604-3511," by calling 1-312-353-2117, or by visiting their web site at http://www.epa.gov/grtlakes/bns/.

(m) Integrated risk management system (IRIS). Information can be obtained by writing to: "IRIS Hotline, c/o EPA Docket Center, Mail Code 28221T, EPA-West Building, 1301 Constitution Avenue NW, Washington, DC 20005," by calling 1-202-566-1676, or by visiting their web site at http://www.epa.gov/iris/index.html.

(n) North American Electric Reliability Corporation Reliability Standard EOP-002-3. Information can be obtained by writing to: "NERC, Washington Office, 1325 G Street, NW Suite 600, Washington, DC 20005-3801," by calling 1-202-400-3000, or by visiting their website at http://www.nerc.com/files/EOP-002-3.pdf.

(o) North American industry classification system (NAICS). Information and copies may be obtained by contacting the national technical information service at 1-800-553-6847. The codes are also available in electronic format at www.census.gov/eos/www/naics.html.

(p) Recommended policy on control of volatile organic compounds. Information and copies of the federal register notice may be obtained by writing to: "Superintendent of Documents, Attention: New Orders, PO

Box 371954, Pittsburgh, PA 15250-7954." The federal register notice is also available for inspection and use at most public libraries and "The State Library of Ohio."

(q) Resource Conservation and Recovery Act (RCRA). Information and copies may be obtained by writing to: "Superintendent of Documents, Attn: New Orders, PO Box 371954, Pittsburgh, PA 15250-7954." The full text of the act is also available in electronic format at http://www.epa.gov/epaoswer/osw/laws-reg.htm. A copy of the act is also available for inspection and use at most public libraries and "The State Library of Ohio."

(r) Standard industrial classification manual (SICM). Information and copies may be ordered by writing to: "U.S. Department of Commerce, Technology Administration, National Technical Information Service, Springfield, Virginia, 22161" or by calling 1-800-553-6847. A copy of the act is also available for inspection and use at most public libraries and "The State Library of Ohio."

(s) United States Code (USC). Information and copies may be obtained by writing to: "Superintendent of Documents, Attn: New Orders, PO Box 371954, Pittsburgh, PA 15250-7954." The full text of the United States Code is also available in electronic format at http://www.gpo.gov/fdsys/browse/collectionUScode.action?collectionCode=USCODE. The USC compilations are also available for inspection and use at most public libraries and "The State Library of Ohio."

(2) Referenced materials:

(a) 1 USC 3; "General Provisions, "Vessel" as including all means of water transportation;" published January 3, 2007 in the 2006 Edition of the United States Code.

(b) 30 CFR Part 7; "Testing by Applicant or Third Party;" as published in the July 1, 2012 Code of Federal Regulations.

(c) 30 CFR Part 36; "Approval Requirements for Permissible Mobile Diesel-Powered Transportation Equipment;" as published in the July 1, 2012 Code of Federal Regulations.

(d) 30 CFR Part 56; "Safety and Health Standards--Surface Metal and Nonmetal Mines;" as published in the July 1, 2012 Code of Federal Regulations.

(e) 30 CFR Part 57; "Safety and Health Standards--Underground Metal and Nonmetal Mines;" as published in the July 1, 2012 Code of Federal Regulations.

(f) 30 CFR Part 70; "Mandatory Health Standards--Underground Coal Mines;" as published in the July 1, 2012 Code of Federal Regulations.

(g) 30 CFR Part 75; "Mandatory Safety Standards--Underground Coal Mines;" as published in the July 1, 2012 Code of Federal Regulations.

(h) 40 CFR 51.165; "Permit requirements;" 51 FR 40669, Nov. 7, 1986, as amended at 52 FR 24713, July 1, 1987; 52 FR 29386, Aug 7, 1987; 54 FR 27285, 27299 June 28, 1989; 57 FR 3946, Feb. 3, 1992; 57 FR 32334, July 21, 1992; 67 FR 80244, Dec. 31, 2002; 68 FR 63027, Nov. 7, 2003; 69 FR 40275, July 1, 2004; 70 FR 71698, Nov. 29, 2005; 72 FR 24077, May 1, 2007; 72 FR 32528, June 13, 2007; 72 FR 72616, Dec. 21, 2007; 73 FR 28347, May 16, 2008;

(i) 40 CFR 51.166; "Requirements for Preparation, Adoption, and Submittal of Implementation Plans, Prevention of significant deterioration of air quality;" as published in the July 1, 2012 Code of Federal Regulations.

(j) 40 CFR 52.21; "Approval and Promulgation of Implementation Plans, Prevention of significant deterioration of air quality;" as published in the July 1, 2012 Code of Federal Regulations.

(k) 40 CFR 60.15(b)(1); "Standards of Performance for New Stationary Sources - Reconstruction;" 40 FR 58420, Dec. 16, 1975.

(l) 40 CFR 60.111b; "Standards of Performance for Volatile Organic Liquid Storage Vessels (Including Petroleum Liquid Storage Vessels) for Which Construction, Reconstruction, or Modification Commenced After July 23, 1984 - Definitions;" 52 FR 11429, Apr. 8, 1987, as amended at 54 FR 32973, Aug. 11, 1989; 65 FR 61756, Oct. 17, 2000; 68 FR 59333, Oct. 15, 2003.

(m) 40 CFR 60.671; "Standards of Performance for Nonmetallic Mineral Processing Plants - Definitions;" 51 FR 31337, Aug. 1, 1985, as amended at 62 FR 31359, June 9, 1997.

(n) 40 CFR 60.4211; "What are my compliance requirements if I am an owner or operator of a stationary CI internal combustion engine?;" 71 FR 39172, July 11, 2006, as amended at 76 FR 37970, June 28, 2011,78 FR 6695, Jan. 30, 2013.

(o) 40 CFR 60.4231; "What emission standards must I meet if I am a manufacturer of stationary SI internal combustion engines or equipment containing such engines?;" 73 FR 3591, Jan. 18, 2008, as amended by 73 FR 59175, Oct. 8, 2008; 76 FR 37973, June 28, 2011, 78 FR 6695, Jan. 30, 2013.

(p) 40 CFR 63.6640; "How do I demonstrate continuous compliance with the emission limitations and operating limitations?;" as published in the July 1, 2013 Code of Federal Regulations.

(q) 40 CFR 81.336; "Designation of Area for Air Quality Planning Purposes-Ohio;" as published in the July 1, 2012 Code of Federal Regulations.

(r) 40 CFR 87.1(a); "Control of Air Pollution From Aircraft and Aircraft Engines, Definitions;" 47 FR 58470, Dec. 30, 1982, as amended at 49 FR 31875, Aug. 9, 1984; 62 FR 25365, May 8, 1997.

(s) 40 CFR 89.2; "Control of Emissions From New and In-Use Nonroad Compression-Ignition Engines, Definitions;" 59 FR 31335, June 17, 1994, as amended at 61 FR 52102, Oct. 4, 1996; 63 FR 18998, Apr. 16, 1998; 63 FR 56996, Oct. 23, 1998; 65 FR 73331, Dec. 29, 1999; 67 FR 68339, Nov. 8, 2002; 69 FR 39212, June 29, 2004; 70 FR 40444, July 13, 2005; 72 FR 53126, Sept. 18, 2007.

(t) 40 CFR 92.907; "Control of Air Pollution From Locomotives and Locomotive Engines, Non-locomotive-specific engine exemption;" 63 FR 18998, Apr. 16, 1998; as amended at 70 FR 40457, July 13, 2005.

(u) 40 CFR Part 50, Appendix J; "Reference Method for the Determination of Particulate Matter as PM10 in the Atmosphere;" 36 FR 22384, Nov. 25, 1971; 52 FR 24664, July 1, 1987; 52 FR 29467, Aug. 7, 1987.

(v) 40 CFR Part 50, Appendix L; "Reference Method for the Determination of Fine Particulate Matter as PM2.5 in the Atmosphere;" 62 FR 38714, July 18, 1997, as amended at 64 FR 19719, Apr. 22, 1999; 71 FR 61226, Oct. 17, 2006.

(w) 40 CFR Part 51; "Requirements for preparation, adoption, and submittal of implementation plans;" as published in the July 1, 2012 Code of Federal Regulations.

(x) 40 CFR Part 51, Appendix M; "Recommended Test Methods for State Implementation Plans;" 36 FR 22398, Nov. 25, 1971; 55 FR 14249, Apr. 17, 1990; 55 FR 24687, June 18, 1990, as amended at 55 FR 37606, Sept. 12, 1990; 56 FR 6278, Feb. 15, 1991; 56 FR 65435, Dec. 17, 1991; 60 FR 28054, May 30, 1995; 62 FR 32502, June 16, 1997; 71 FR 55123, Sept. 21, 2006; 73 FR 30779, May 29, 2008.

(y) 40 CFR Part 51, Appendix S, Sections I through VI; "Emission Offset Interpretive Ruling;" 36 FR 22398, Nov. 25, 1971; 44 FR 3282, Jan. 16, 1979, as amended at 45 FR 31311, May 13, 1980; 45 FR 52741, Aug. 7, 1980; 45 FR 59879, Sept. 11, 1980; 46 FR 50771, Oct. 14, 1981; 47 FR 27561, June 25, 1982; 49 FR 43210, Oct. 26, 1984; 51 FR 40661, 40675, Nov. 7, 1986; 52 FR 24714, July 1, 1987; 52 FR 29386, Aug 7, 1987; 54 FR 27285, 27299, June 28, 1989; 57 FR 3946, Feb. 3, 1992; 70 FR

71702, Nov. 29, 2005; 72 FR 10373, Mar. 8, 2007; 72 FR 24077, May 1, 2007; 72 FR 72616, Dec. 21, 2007; 73 FR 28348, May 16, 2008.

(z) 40 CFR Part 51, Appendix W; "Guideline on Air Quality Models;" 70 FR 68228, Nov. 9, 2005.

(aa) 40 CFR Part 51, Subpart I; "Requirements for Preparation, Adoption, and Submittal of Implementation Plans, Subpart I -- Review of New Sources and Modifications;" as published in the July 1, 2012 Code of Federal Regulations.

(bb) 40 CFR Part 52; "Approval and promulgation of implementation plans;" as published in the July 1, 2012 Code of Federal Regulations.

(cc) 40 CFR Part 53; "Ambient Air Monitoring Reference and Equivalent Methods;" as published in the July 1, 2012 Code of Federal Regulations.

(dd) 40 CFR Part 58, Appendix B; "Quality Assurance Requirements for Prevention of Significant Deterioration (PSD) Air Monitoring;" 44 FR 27571, May 10, 1979; 44 FR 65070, Nov. 9, 1979; 44 FR 72592, Dec. 14, 1979, as amended at 46 FR 44168, Sept. 3, 1981; 48 FR 2530, Jan. 20, 1983; 51 FR 9596, Mar. 19, 1986; 52 FR 24741, July 1, 1987; 59 FR 41628, 41629, Aug. 12, 1994; 60 FR 52321, Oct. 6, 1995.

(ee) 40 CFR Part 60; "Standards of Performance for New Stationary Sources;" as published in the July 1, 2012 Code of Federal Regulations.

(ff) 40 CFR Part 60, Appendix A; "Test Methods - Standards of Performance for New Stationary Sources;" as published in the July 1, 2012 Code of Federal Regulations.

(gg) 40 CFR Part 60, Appendix B; "Performance Specifications;" 48 FR 13327, Mar. 30, 1983 and 48 FR 23611, May 25, 1983, as amended at 48 FR 32986, July 20, 1983; 51 FR 31701, Aug. 5, 1985; 52 FR 17556, May 11, 1987; 52 FR 30675, Aug. 18, 1987; 52 FR 34650, Sept. 14, 1987; 53 FR 7515, Mar. 9, 1988; 53 FR 41335, Oct. 21, 1988; 55 FR 18876, May 7, 1990; 55 FR 40178, Oct. 2, 1990; 55 FR 47474, Nov. 14, 1990; 56 FR 5526, Feb. 11, 1991; 59 FR 64593, Dec. 15, 1994; 64 FR 53032, Sept. 30, 1999; 65 FR 62130, 62144, Oct. 17, 2000; 65 FR 48920, Aug. 10, 2000; 69 FR 1802, Jan. 12, 2004; 70 FR 28673, May 18, 2005; 71 FR 55127, Sept. 21, 2006; 72 FR 32767, June 13, 2007; 72 FR 51527, Sept. 7, 2007; 72 FR 55278, Sept. 28, 2007.

(hh) 40 CFR Part 60, Subpart I; "Standards of Performance for Hot Mix Asphalt Facilities;" 39 FR 9314, Mar. 8, 1974, as amended at 40 FR 46259, Oct. 6, 1975; 42 FR 37936, July 25, 1977; 51 FR 12325, Apr. 10, 1986; 54 FR 6667, Feb. 14, 1989.

(ii) 40 CFR Part 60, Subpart J; "Standards of Performance for Petroleum Refineries;" 39 FR 9315, Mar. 8, 1974, as amended at 40 FR 46259, Oct. 6, 1975; 42 FR 32427, June 24, 1977; 42 FR 39389, Aug. 4, 1977; 43 FR 10868, Feb. 15, 1978; 43 FR 10868-10869, Mar. 15, 1978; 44 FR 13481, Mar. 12, 1979; 44 FR 61543, Oct. 25, 1979; 45 FR 79453, Dec. 1, 1980; 48 FR 23611, May 25, 1983; 50 FR 31701, Aug. 5, 1985; 51 FR 42842, Nov. 26, 1986; 52 FR 20392, June 1, 1987; 53 FR 41333, Oct. 21, 1988; 54 FR 34026-340310, Aug. 17, 1989; 55 FR 40175-40176, 40178, Oct. 2, 1990; 56 FR 4176, Feb. 4, 1991; 64 FR 7465-7466, Feb. 12, 1999; 65 FR 61753-61755, Oct. 17, 2000; 71 FR 55127, Sept. 21, 2006; 73 FR 35865, June 24, 2008.

(jj) 40 CFR, Part 60, Subpart Dc; "Standards of Performance for Small Industrial-Commercial-Institutional Steam Generating Units;" 55 FR 37683, Sept. 12, 1990, as amended at 61 FR 20736, May 8, 1996; 64 FR 7465, Feb. 12, 1999; 65 FR 61752, Oct. 17, 2000; 65 FR 61753, Oct. 17, 2000; 72 FR 32759, June 13, 2007.

(kk) 40 CFR Part 60, Subpart AAA; "Standards of Performance for New Residential Wood Heaters;" 53 FR 5873-5874, Feb. 26, 1988, as amended at 53 FR 12009, Apr. 12, 1988; 53 FR 14889, Apr. 26, 1988; 57 FR 5328, Feb. 13, 1992; 60 FR 33925, June 29, 1995; 53 FR 5873, Feb. 26, 1988; 63 FR 64874, Nov. 24, 1998; 64 FR 7466, Feb. 12, 1999; 65 FR 61763-61764, Oct. 17, 2000.

(ll) 40 CFR Part 60, Subpart OOO; "Standards of Performance for Nonmetallic Mineral Processing Plants;" 51 FR 31337, Aug. 1, 1985, as amended at 54 FR 6680, Feb. 14, 1989; 62 FR 31359-31360, June 9, 1997; 65 FR 61778, Oct. 17, 2000.

(mm) 40 CFR Part 60, Subpart IIII; "Standards of Performance for Stationary Compression Ignition Internal Combustion Engines;" as published in the July 1, 2012 Code of Federal Regulations.

(nn) 40 CFR Part 60, Subpart JJJJ; "Standards of Performance for Stationary Spark Ignition Internal Combustion Engines;" as published in the July 1, 2012 Code of Federal Regulations.

(oo) 40 CFR Part 63, Subpart ZZZZ; "National Emissions Standards for Hazardous Air Pollutants for Stationary Reciprocating Internal Combustion Engines;' as published in the July 1, 2012 Code of Federal Regulations.

(pp) 40 CFR Part 61; "National Emission Standards for Hazardous Air Pollutants;" as published in the July 1, 2012 Code of Federal Regulations.

(qq) 40 CFR Part 61, Subpart M; "National Emission Standard for Asbestos;" 49 FR 13661, Apr. 5, 1984 as amended by 49 FR 25453, June 21, 1984;

51 FR 8199, Mar. 10, 1986; 53 FR 36972, Sept. 23, 1988; 55 FR 48414, 48416, 48419, 48424, 48429-48433, Nov. 20, 1990; 56 FR 1669, Jan. 16, 1991; 55 FR 48424, Nov. 20, 1991; 60 FR 31920, June 19, 1995; 64 FR 7467, Feb. 12, 1999; 68 FR 54793, Sept. 18, 2003; 69 FR 43324, July 20, 2004.

(rr) 40 CFR Part 63; "National Emission Standards for Hazardous Air Pollutants for Source Categories;" as published in the July 1, 2012 Code of Federal Regulations.

(ss) 40 CFR Part 89; "Control of Emissions From New and In-Use Nonroad Compression-Ignition Engines;" as published in the July 1, 2012 Code of Federal Regulations.

(tt) 40 CFR Part 92; "Control of Air Pollution From Locomotives and Locomotive Engines;" as published in the July 1, 2012 Code of Federal Regulations.

(uu) 42 USC 7401 to 7671q; "The Public Health and Welfare-Air Pollution Prevention and Control;" published January 2, 2006 in Supplement V of the 2000 Edition of the United States Code; as amended December 19, 2007, Pub. L. 110-140, sec 201, 202, 203(f), 204, 208, 209, 210(a), 210(b), 210(c), 247, and 251, 121 Stat. 1519, 1521, 1529, 1531, 1532, 1547, and 1548.

(vv) 42 USC 7410; "State implementation plans for national primary and secondary ambient air quality standards;" published January 2, 2006 in Supplement V of the 2000 Edition of the United States Code.

(ww) 42 USC 7412(h); "Hazardous air pollutants, Work practice standards and other requirements;" published January 2, 2005 in Supplement V of the 2000 Edition of the United States Code.

(xx) "Chemical Rubber Company (CRC) Handbook of Chemistry and Physics," 89th Edition, 2008-2009 as published on June 17, 2008.

(yy) Comprehensive Environmental Response, Compensation, and Liability Act (CERCLA) Section 121(e); contained in 42 USC 9621; "Cleanup standards;" published January 2, 2006 in Supplement V of the 2000 Edition of the United States Code.

(zz) Federal Power Act; contained in 16 USC 791 to 828c; "Federal Regulation and Development of Power;" published January 2, 2006 in Supplement V of the 2000 Edition of the United States Code.

(aaa) New source performance standards; contained in 42 USC 7411; "Standards of performance for new stationary sources;" published January 2, 2006 in Supplement V of the 2000 Edition of the United States Code.

(bbb) North American Electric Reliability Corporation Reliability Standard EOP-002-3; "Capacity and Energy Emergencies;" adopted August 5, 2010.

(ccc) Part C of Title I of the Clean Air Act; contained in 42 USC 7470 to 7492; "Prevention of Significant Deterioration of Air Quality;" published January 2, 2006 in Supplement V of the 2000 Edition of the United States Code.

(ddd) Part D of Title I of the Clean Air Act; contained in 42 USC 7501 to 7515; "Plan Requirements for Nonattainment Areas;" published January 2, 2006 in Supplement V of the 2000 Edition of the United States Code.

(eee) RCRA Subtitle D; contained in 42 USC 6941 to 6949a; "Resource Conservation and Recovery Act, State or Regional Solid Waste Plans;" published January 2, 2006 in Supplement V of the 2000 Edition of the United States Code.

(fff) Recommended policy on control of volatile organic compounds; 42 FR 35314, July 8, 1977.

(ggg) Section 1.4, "Natural Gas Combustion;" contained in Chapter 1, "External Combustion Sources", Volume I, "Stationary Point and Area Sources" of the "Compilation of Air Pollutant Emission Factors, AP-42;" Fifth Edition, supplement D, as published July, 1998.

(hhh) Section 2(A) and (B) of the Energy Supply and Environmental Coordination Act of 1974; contained in 15 USC 792; "Coal conversion and allocation;" published January 19, 2004 in Supplement III of the 2000 Edition of the United States Code.

(iii) Section 107(d) of the Clean Air Act; contained in 42 USC 7407; "Air Quality Control Regions-Designations;" published January 2, 2006 in Supplement V of the 2000 Edition of the United States Code.

(jjj) Section 108 of the Clean Air Act; contained in 42 USC 7408; "Air quality criteria and control techniques;" published January 2, 2006 in Supplement V of the 2000 Edition of the United States Code.

(kkk) Section 109 of the Clean Air Act; contained in 42 USC 7409; "National primary and secondary ambient air quality standards;" published January 2,2006 in Supplement V of the 2000 Edition of the United States Code.

(lll) Section 110 of the Clean Air Act; contained in 42 USC 7410; "State implementation plans for national primary and secondary ambient air quality standards;" published January 2, 2006 in Supplement V of the 2000 Edition of the United States Code.

(mmm) Section 111 of the Clean Air Act; contained in 42 USC 7411; "Standards of performance for new stationary sources;" published January 2, 2006 in Supplement V of the 2000 Edition of the United States Code.

(nnn) Section 112 of the Clean Air Act; contained in 42 USC 7412; "Hazardous Air Pollutants;" published January 2, 2006 in Supplement V of the 2000 Edition of the United States Code.

(ooo) Section 112(b) of the Clean Air Act; contained in 42 USC 7412; "Hazardous air pollutants- List of pollutants;" published January 2, 2006 in Supplement V of the 2000 Edition of the United States Code.

(ppp) Section 112(c) of the Clean Air Act; contained in 42 USC 7412; "Hazardous air pollutants - List of source categories;" published January 2, 2006 in Supplement V of the 2000 Edition of the United States Code.

(qqq) Section 112(d) of the Clean Air Act; contained in 42 USC 7412; "Hazardous air pollutants-Emission standards;" published January 2, 2006 in Supplement V of the 2000 Edition of the United States Code.

(rrr) Section 112(h) of the Clean Air Act; contained in 42 USC 7412; "Hazardous air pollutants-Work practice standards and other requirements;" published January 2, 2006 in Supplement V of the 2000 Edition of the United States Code.

(sss) Section 112(j) of the Clean Air Act; contained in 42 USC 7412; "Hazardous air pollutants-Equivalent emission limitation by permit;" published January 2, 2006 in Supplement V of the 2000 Edition of the United States Code.

(ttt) Section 112(l) of the Clean Air Act; contained in 42 USC 7412; "Hazardous Air Pollutants;" published January 2, 2006 in Supplement V of the 2000 Edition of the United States Code.

(uuu) Section 113 of the Clean Air Act; contained in 42 USC 7413; "Federal enforcement;" published January 2, 2006 in Supplement V of the 2000 Edition of the United States Code.

(vvv) Section 121(e) of the Comprehensive Environmental Response, Compensation, and Liability Act (CERCLA); contained in 42 USC 9621; "Cleanup Standards - Permits and Enforcement;" published January 2, 2006 in Supplement V of the 2000 Edition of the United States Code.

(www) Section 125 of the Clean Air Act; contained in 42 USC 7425; "Measures to prevent economic disruption or unemployment;" published January 2, 2006 in Supplement V of the 2000 Edition of the United States Code.

(xxx) Section 173 of the Clean Air Act; contained in 42 USC 7503; "Permit requirements;" published January 2, 2006 in Supplement V of the 2000 Edition of the United States Code.

(yyy) Section 171 of the Clean Air Act; contained in 42 USC 7501; "Definitions;" published January 2, 2006 in Supplement V of the 2000 Edition of the United States Code.

(zzz) Section 182(c) of the Clean Air Act; contained in 42 USC 7511a; "Plan submissions and requirements-Serious Areas;" published January 2, 2006 in Supplement V of the 2000 Edition of the United States Code.

(aaaa) Section 182(f) of the Clean Air Act; contained in 42 USC 7511a; "Plan submissions and requirements-NO_x requirements;" published January 2, 2006 in Supplement V of the 2000 Edition of the United States Code.

(bbbb) Section 189 of the Clean Air Act; contained in 42 USC 7513a; "Plan Provisions and Schedules for Plan Submissions;" published January 2, 2006 in Supplement V of the 2000 Edition of the United States Code.

(cccc) Section 202 of the Clean Air Act; contained in 42 USC 7521; "Emission standards for new motor vehicles or new motor vehicle engines;" published January 2, 2006 in Supplement V of the 2000 Edition of the United States Code.

(dddd) Section 216 of the Clean Air Act; contained in 42 USC 7550; "Motor Vehicle Emission and Fuel Standards - Definitions;" published January 2, 2006 in Supplement V of the 2000 Edition of the United States Code.

(eeee) Section 304 of the Clean Air Act; contained in 42 USC 7604; "Citizen suits;" published January 2, 2006 in Supplement V of the 2000 Edition of the United States Code.

(ffff) Section 402(12) of Title IV of the Clean Air Act; contained in 42 USC 7651a; "Definitions;" published January 2, 2006 in Supplement V of the 2000 Edition of the United States Code.

(gggg) Section 409 of the Clean Air Act; contained in 42 USC 7651h; "Repowered sources;" published January 2, 2006 in Supplement V of the 2000 Edition of the United States Code.

(hhhh) Section 504(a) of the Clean Air Act; contained in 42 USC 7661c; "Permit requirements and conditions;" published January 2, 2006 in Supplement V of the 2000 Edition of the United States Code.

(iiii) Standard industrial classification manual. United States. Office of management and budget. Last amended 1988.

(jjjj) Title II of the Clean Air Act; contained in 42 USC 7521 to 7590; "Emission Standards for Moving Sources;" published January 2, 2006 in Supplement V of the 2000 Edition of the United States Code; December 19, 2007, Pub. L. 110-140, sec 201, 202, 203(f), 204, 208, 209, 210(a), 210(b), 210(c), 247, and 251, 121 Stat. 1519, 1521, 1529, 1531, 1532, 1547, and 1548.

(kkkk) Title IV of the Clean Air Act; contained in 42 USC 7651 to 7651o; "Acid Deposition Control;" published January 2, 2006 in Supplement V of the 2000 Edition of the United States Code.

(llll) Title VI of the Clean Air Act; contained in 42 USC 7671 to 7671q; "Stratospheric Ozone Protection;" published January 2, 2006 in Supplement V of the 2000 Edition of the United States Code.

(mmmm) USEPA Method 9; contained in 40 CFR Part 60, Appendix A-4; "Visual Determination of the Opacity of Emissions From Stationary Sources;" as published in the July 1, 2012 Code of Federal Regulations.

Effective: 05/29/2014

R.C. 119.032 review dates: 01/10/2014 and 05/29/2019

CERTIFIED ELECTRONICALLY
Certification

05/19/2014
Date

Promulgated Under: 119.03
Statutory Authority: 3704.03(F), 3704.03(G)
Rule Amplifies: 3704.03(A), 3704.03(F), 3704.03(G)
Prior Effective Dates: 7/5/73, 1/1/74, 11/7/79, 8/15/82, 9/18/87, 11/17/88(Emer.), 3/9/89(Emer.), 6/12/89, 10/8/93, 6/1/94, 4/12/96, 4/27/98, 9/25/98, 11/30/01, 10/17/03, 10/28/04, 11/03/06, 12/01/06, 12/14/07

3745-31-02 **Applicability, requirements, and obligations.**

[Comment: For dates and availability of non-regulatory government publications, publications of recognized organizations and associations, federal rules, and federal statutory provisions referenced in this rule, see paragraph (LLLLLL) of rule 3745-31-01 of the Administrative Code titled, "referenced materials".]

This chapter provides requirements for installation, modification and operation of new and existing air contaminant sources at facilities that are not subject to Chapter 3745-77 of the Administrative Code. This chapter also provides requirements for installation and modification of air contaminant sources at facilities that are, or will be, subject to Chapter 3745-77 of the Administrative Code. The operating requirements for air contaminant sources, defined as Title V sources, can be found in Chapter 3745-77 of the Administrative Code.

[Comment: Prior to June 30, 2008, requirements for permits-to-operate for sources not subject to Chapter 3745-77 of the Administrative Code were contained in Chapter 3745-35 of the Administrative Code. On June 30, 2008, Chapter 3745-35 was rescinded and all operating requirements for sources at facilities not subject to Chapter 3745-77 of the Administrative Code were incorporated into this chapter. Rules 3745-31-01 to 3745-31-07 of the Administrative Code provide regulatory requirements for installation and modification for all sources. Rules 3745-31-01 to 3745-31-07 of the Administrative Code also provide regulatory requirements for operation of sources at facilities not subject to Chapter 3745-77 of the Administrative Code. Rule 3745-31-08 of the Administrative Code provides the on-going regulatory requirements for sources at facilities not subject to Chapter 3745-77 of the Administrative Code that previously received registration status for permit-to-operate purposes under the now rescinded Chapter 3745-35 of the Administrative Code. Updated requirements for registration status, now defined as express permit-to-install or express PTIOs, are incorporated into rule 3745-31-05 of the Administrative Code. Rule 3745-31-09 of the Administrative Code provides for operation or other use of an air contaminant source that emits any air pollutant under a variance. This provision was previously established in the now rescinded rule 3745-35-03 of the Administrative Code. Rule 3745-31-29 of the Administrative Code provides for general permits-to-install and general PTIOs. Rule 3745-31-33 of the Administrative Code identifies activities that are included and excluded from meaning of begin actual construction, as defined in rule 3745-31-01 of the Administrative Code. The remaining rules in this chapter, rules 3745-31-10 to 3745-31-28 and rule 3745-31-32 of the Administrative Code, provide additional regulatory requirements for installation and modification of air contaminant sources that are located at a major stationary source or are considered major modifications, as defined in rule 3745-31-01 of the Administrative Code. Installation or modification of

air contaminant sources that are located at a major stationary source or are considered major modifications, are, or will become, subject to Chapter 3745-77 of the Administrative Code. The operating regulatory requirements for these types of sources are contained in Chapter 3745-77 of the Administrative Code.]

(A) Permit-to-install or PTIO

(1) Except as provided in rule 3745-31-03 of the Administrative Code or paragraph (A)(3) of this rule, no person shall cause, permit, or allow any of the following:

(a) Installation or modification of any new source that is, or will be, part of a facility, as defined in Chapter 3745-77 of the Administrative Code, and that is required to obtain a Title V permit under Chapter 3745-77 of the Administrative Code, without first obtaining a permit-to-install from the director.

(b) Installation or modification, and subsequent operation of any new source that is not part of a facility, as defined in Chapter 3745-77 of the Administrative Code, and that is not required to obtain a Title V permit under Chapter 3745-77 of the Administrative Code, without first obtaining a PTIO from the director.

[Comment: Paragraph (A)(1)(b) of this rule is not intended to prohibit any new source, as defined in rule 3745-31-01 of the Administrative Code, currently operating under an effective permit-to-install or permit-to-operate from continuing operation in accordance with those permits. Nor is it intended to prohibit any new source currently operating under an expired permit-to-operate, where a timely and complete application for renewal is pending in accordance with division (C) of section 119.06 of the Revised Code, from continuing operation in accordance with the expired permit-to-operate until such time as a new PTIO is issued or denied.]

(c) Operation of any air contaminant source, except as provided in rule 3745-31-08 of the Administrative Code, not defined as a new source under rule 3745-31-01 of the Administrative Code, that is not part of a facility, as defined in Chapter 3745-77 of the Administrative Code, and that is not required to obtain a Title V permit under Chapter 3745-77 of the Administrative Code, without first obtaining authority to operate through issuance of a PTIO from the director, which may include any of the following:

(i) Requirements for equipping the air contaminant source with instrumentation and sensing devices to monitor and record emission data and other information about the operation of the air contaminant source.

(ii) Requirements for performance tests that demonstrate that the source is in compliance with applicable emission limitations and other applicable laws, at the applicant's expense, in accordance with methods prescribed by the Ohio environmental protection agency. The Ohio environmental protection agency, or its representatives, may observe, participate in, or conduct any performance test required.

(2) An owner or operator who currently holds a permit-to-install or permit-to-operate for an air contaminant source which permit was issued prior to the effective date of this rule, may be issued a PTIO for the same air contaminant source. The director may require the owner or operator of the air contaminant source submit an updated application for the PTIO. Upon final issuance of the PTIO, any permit-to-install or permit-to-operate for the air contaminant source will be superseded by the issuance of the PTIO. The superseded permits will terminate and cease to be enforceable.

(3) No installation permit shall be required for activities that are subject to and in compliance with a plant-wide applicability limit issued by the director in accordance with rule 3745-31-32 of the Administrative Code.

(B) Changes in applicability: Title V versus non-Title V.

This paragraph is applicable to an owner or operator where a change in the air contaminant source, stationary source, or applicable law results in a change in the requirements applicable to the source under this chapter or Chapter 3745-77 of the Administrative Code. A change may include, but is not limited to, a modification or major modification as defined in this chapter, a relaxation of a federally enforceable limitation on the potential to emit applicable under paragraph (D) of rule 3745-31-05 of the Administrative Code, or the imposition of a federally enforceable limitation, or limitation legally and practicably enforceable by the state, on the potential to emit that restricts a stationary source's potential to emit below major source thresholds applicable under paragraph (D) of rule 3745-31-05 of the Administrative Code.

(1) The following is applicable to an owner or operator who holds a permit-to-install, permit-to-operate or PTIO where a change subjects the owner or operator to the requirements of Chapter 3745-77 of the Administrative Code:

(a) The owner or operator shall submit a Title V permit application and obtain a Title V permit from the director, as required under Chapter 3745-77 of the Administrative Code.

(b) If the change is defined as a new source, modification or major modification under this chapter, the owner or operator shall submit the required application and obtain a permit-to-install, as required under this chapter, from the director.

(c) Upon final issuance of the permit required under paragraph (B)(1)(a) of this rule, and, if applicable, under paragraph (B)(1)(b) of this rule, any permit-to-operate, or any terms and conditions specifically identified in the standard terms and conditions of a PTIO as no longer enforceable under conditions described in paragraph (B)(1) of this rule, will be superseded by the issuance of the Title V permit required under paragraph (B)(1)(a) of this rule, and, if applicable, the permit-to-install required under paragraph (B)(1)(b) of this rule. All superseded permits-to-operate and specifically superseded terms and conditions of a PTIO, will terminate and cease to be enforceable. As applicable, terms and conditions of any PTIO not superseded will function as the permit-to-install.

(2) The following is applicable to an owner or operator who currently holds a Title V permit where a change eliminates the applicability of Chapter 3745-77 of the Administrative Code but the change does not exempt the owner or operator from requirements to obtain a PTIO:

(a) The owner or operator may submit the required application and obtain a PTIO or Federally Enforceable PTIO (FEPTIO) from the director, as required under this chapter.

[Comment: An owner or operator with authority to operate under a Title V permit which subsequently makes a change at the facility that eliminates the applicability of Chapter 3745-77 of the Administrative Code is not obligated to obtain a PTIO or FEPTIO if the owner or operator elects to continue to be permitted under the Title V permit.]

(b) Final issuance of any permit under paragraph (B)(2)(a) of this rule does not release the owner or operator from the requirements contained in Chapter 3745-77 of the Administrative Code or the owner or operator's active Title V permit, except as expressly released in rule, by order of the director, or a in a federally enforceable permit.

(C) Permanent shutdown of an air contaminant source subject to the terms and conditions of a permit-to-install or PTIO.

When expressly provided in the terms and conditions of a permit-to-install or PTIO, the owner or operator of an air contaminant source that is permanently shutdown may be relieved from certain requirements in the terms and conditions of the permit-to-install or PTIO, without obtaining a modification or administrative modification, upon meeting the requirements specified in the permit for permanently shutting down air contaminant sources. Those terms and conditions for which the owner or operator is relieved will cease to be enforceable upon meeting the requirements for permanently shutting down air contaminant sources contained in the terms and conditions of the permit.

(D) The director, in the director's discretion, may issue an order requiring any person planning to install or modify, or in the process of installing or modifying, any air contaminant source as defined in rule 3745-31-01 of the Administrative Code, that is otherwise exempted, to obtain a permit-to-install or PTIO, before proceeding with installation or modification, if in the director's judgment, operation of the air contaminant source after installation or modification might result in a violation of the criteria established in paragraph (A) of rule 3745-31-05 of the Administrative Code.

(E) The director, in the director's discretion or where required to do so by federal laws or regulations, may issue a single permit-to-install or PTIO having application to all pollutants of any kind emanating from any air contaminant source, or issue a single permit-to-install or PTIO having applicability to more than one air contaminant source, controlled by a common owner or operator, located in the same county.

(F) The approval to construct or operate under this chapter shall not relieve any owner or operator of a stationary source of the responsibility to comply fully with applicable provisions of this chapter and any other requirements under local, state or federal law.

(G) If any provision of this chapter or the application of such provision to any person or circumstance, is held invalid, the remainder of this chapter, or the application of such provision to persons or circumstances other than those as to which it is held invalid, shall not be affected thereby.

Effective: 05/29/2014

R.C. 119.032 review dates: 01/10/2014 and 05/29/2019

CERTIFIED ELECTRONICALLY
Certification

05/19/2014
Date

Promulgated Under: 119.03
Statutory Authority: 3704.03(F), 3704.03(G)
Rule Amplifies: 3704.03(G), 3704.03(F) , 3704.03(A)
Prior Effective Dates: 7/5/73, 1/1/74, 11/7/79, 6/14/82, 8/15/82, 9/18/87, 4/20/94, 11/18/94, 4/12/96, 4/27/98, 6/18/01, 11/30/01, 10/17/03, 10/28/04, 11/3/06, 12/01/06, 6/30/08

3745-31-03 **Exemptions and permits-by-rule.**

[Comment: For dates of non-regulatory government publications, publications of recognized organizations and associations, federal rules, and federal statutory provisions referenced in this rule, see the "Incorporation by Reference" section at the end of rule 3745-31-01 of the Administrative Code.]

(A) A permit-to-install or PTIO as required by rule 3745-31-02 of the Administrative Code must be obtained for the installation or modification, and operation of an air contaminant source unless exempted from the requirements as follows:

[Comment: The following exemptions relieve permittees from the obligation to apply for and obtain a permit-to-install or PTIO. They do not, however, exempt any air contaminant source from requirements of the Clean Air Act, including being considered for purposes of determining whether a facility constitutes a major source or is otherwise regulated under Chapter 3745-77 of the Administrative Code or any requirement to identify insignificant activities and emission levels in a Title V permit application. In addition, this rule does not relieve the owner or operator from the requirement of including the emissions associated with the exempt sources into any major NSR permitting action.]

(1) Permanent exemptions

The following exemptions do not apply to emissions units subject to 40 CFR Part 61, the national emission standards for hazardous air pollutants (NESHAPs), with the exception of 40 CFR Part 61, Subpart M, asbestos removal activities; or emissions units subject to 40 CFR Part 63, the NESHAPs for source categories, MACT standards, unless such standard either only requires submission of a notification, and written notification satisfying the MACT notification requirements has been or will be submitted to the Ohio environmental protection agency prior to the notification deadline imposed by the MACT, or such standard does not impose any requirements (i.e., notifications, emissions limits, record keeping, etc.) to the particular emissions unit; or emissions units subject to the new source performance standards (NSPS) with the exception of 40 CFR Part 60, Subpart AAA, residential wood heaters, 40 CFR Part 60, Subpart OOO, nonmetallic mineral processing plants, and 40 CFR Part 60, Subpart I, hotmix asphalt facilities.

(a) Fossil fuel-fired boilers, preheaters, air heaters, water heaters, or heaters used for other heat exchange media less than ten million British thermal units per hour burning only natural gas, distillate oil (with less than or equal to 0.5 per cent by weight sulfur), or liquid petroleum gas.

(b) Fossil fuel or wood fuel-fired boilers, preheaters, air heaters, or water heaters less than one million British thermal units per hour except units burning waste fuels or waste oil.

(c) Fossil fuel-fired furnaces or dryers less than ten million British thermal units per hour and burning only natural gas, distillate oil (with less than or equal to 0.5 per cent by weight sulfur), or liquid petroleum gas and the only emissions are from the products of combustion from fuel and water vapor and where no melting or refining occurs nor where any burning of any material occurs.

(d) Tumblers used for the cleaning or deburring of metal products without abrasive blasting.

(e) Equipment used exclusively for the packaging of lubricants or greases, and water-borne adhesives, coatings or binders.

(f) Equipment used exclusively for the mixing and blending of materials at ambient temperature to make water-borne adhesives, coatings or binders.

(g) Bakery ovens that bake:

(i) Chemically leavened products; or

(ii) Yeast dough products and that are not located at a commercial bakery; or

(iii) Biscuits, crackers, cookies and other similar nonleavened projects; or

(iv) Yeast dough, bread, buns and rolls at a bakery having a total maximum yeast dough, bread, buns and rolls production rate of less than or equal to one thousand pounds per hour.

(h) Mixers and blenders and deep fat fryers (except deep fat fryers used for large scale production of products) where the products are edible and intended for human consumption.

(i) Laboratory equipment

(i) Laboratory equipment and laboratory fume hoods used exclusively for chemical or physical analyses and bench scale laboratory equipment.

(ii) Laboratory paint booths used to prepare samples for chemical or physical analysis where the actual emissions of each laboratory paint booth is less than 3.0 tons of VOC per year and where:

(a) The owner or operator maintains records, available to the director upon request, detailing that the VOC emissions are less than 3.0 tons of VOC per year, and

(b) Any exhaust system that serves only coating spray equipment is supplied with a properly installed and operating particulate control system.

(j) Photographic process equipment by which an image is reproduced upon material sensitized to radiant energy.

(k) Equipment used for injection molding of resins where no more than one million pounds of resins (thermoplastic or thermosetting) per rolling twelve-month period are used in injection machines at the facility.

(l) Storage tanks for:

(i) Inorganic liquids including water (at standard temperature and pressure) except as described in paragraph (A)(1)(l)(vii) of this rule; or

(ii) Pressurized storage for inorganic compounds or propane, butane, isobutane, and liquid petroleum gases; or

(iii) Liquids with a capacity of less than seven hundred gallons; or

(iv) Organic liquids with a capacity of less than seventy-five cubic meters (nineteen thousand eight hundred fifteen gallons) and equipped with submerged fill, except gasoline storage tanks located at bulk gasoline plants which are subject to the requirements of paragraph (P) of rule 3745-21-09 of the Administrative Code; or

(v) Organic liquids with a capacity greater than or equal to seventy-five cubic meters (nineteen thousand eight hundred fifteen gallons) but less than one hundred fifty-one cubic meters (thirty-nine thousand eight hundred ninety-four gallons) storing a liquid with a maximum true vapor pressure, as defined in 40 CFR 60.111b, of less than 15.0 kilopascals (2.176 pounds per square inch absolute) and equipped with submerged fill; or

(vi) Organic liquids with a capacity greater than or equal to one hundred fifty-one cubic meters (thirty-nine thousand eight hundred ninety-four gallons) storing a liquid with a maximum true vapor pressure, as defined in 40 CFR 60.111b, of less than 3.5 kilopascals (0.508 pounds per square inch absolute); or

(vii) Acids (as defined in the "Chemical Rubber Company (CRC) Handbook of Chemistry and Physics") stored in tanks less than or equal to seven thousand five hundred gallons capacity.

(m) Compression molding presses used for the curing of plastic products that qualify for the de minimis exemption under rule 3745-15-05 of the Administrative Code. This type of press uses a thermosetting resin and involves a chemical reaction, usually involving heat, that converts the material (e.g., polyesters, polyurethanes, epoxy resins, etc.) to a solid, insoluble state using a hardening or curing operation.

(n) Presses used exclusively for extruding clay.

(o) Storage tanks, storage silos, and other farm equipment located on a farm and utilized exclusively for the production of food or grain on the premises.

(p) The relocation of any portable source in the state of Ohio that meets the following requirements under this paragraph:

(i) The company has demonstrated the following:

(a) The portable source was installed after January 1, 1974 and continues to comply with any applicable BAT and state or federal air pollution rule or law; and

(b) The portable source continues to comply with the currently effective permit-to-install or PTIO or express permit-to-install or express PTIO and/or any applicable permit-to-operate; and

(c) The applicant has provided proper notice of intent to relocate the portable source to the director within a minimum of thirty days prior to the scheduled relocation; and

(d) The director has issued a notice stating that in the director's judgment, the proposed site is acceptable under rule 3745-15-07 of the Administrative Code, and

(e) The director has issued a notice stating that in the director's judgment, relocating the portable source will not result in the installation of a major stationary source or the modification of a major stationary source.

[Comment: Relocation of any portable source that results in the installation of a major stationary source or the modification of a major stationary source must also meet all applicable requirements under this chapter, including the requirement to obtain a permit-to-

install prior to relocation. Relocation of any portable source that results in the creation of a major source, as defined in rule 3745-77-01 of the Administrative Code, must also meet all applicable requirements under the Title V program contained in Chapter 3745-77 of the Administrative Code, which may include the requirement to apply for a Title V permit.]

(ii) The director has issued a site approval for the new location pursuant to rule 3745-31-05 of the Administrative Code.

(q) A drycleaning facility constructed between January 1, 1974 and December 31, 1981 in which the annual amounts of fabric drycleaned with perchloroethylene is less than sixty thousand pounds and is not located in Butler, Clermont, Cuyahoga, Franklin, Greene, Hamilton, Lake, Lorain, Lucas, Mahoning, Medina, Montgomery, Portage, Stark, Summit, Trumbull, Warren and Wood counties.

(r) Noncontinuous solvent recycling or reclaiming units with less than twenty gallons capacity.

(s) Non-heatset or sheet-fed presses with an OC potential to emit of less than three tons per year.

(t) An incinerator located at a dwelling designed and used to dispose of residential wastes and having a capacity for serving six or fewer households or units per dwelling.

(u) Equipment used for spraying or applying insecticides, pesticides and herbicides except at facilities producing these substances or mixtures for sale or distribution.

(v) Combustors used exclusively for the purpose of research and development of more efficient combustion of coal or more effective prevention of air pollutant emissions from coal combustion, less than ten million British thermal units per hour and an annual average capacity factor of not more than twenty per cent.

(w) Solvent cold cleaners that meet the provisions of paragraph (O) of rule 3745-21-09 of the Administrative Code and have a liquid surface area less than or equal to ten square feet or a reservoir opening of less than six inches in diameter.

(x) Ink-jet printers.

(y) Grinding and machining operations, abrasive blasting, pneumatic conveying, and wood working operations controlled with a fabric filter, scrubber, or

mist collector designed to emit not more than 0.03 grains of particulate per dry standard cubic foot of exhaust gas with less than four thousand actual cubic feet per minute volume, venting inside a building, and emitting less than ten pounds per day of nonparticulate matter air contaminants.

(z) Uncontrolled grinding, machining, and sanding operations, abrasive cleaning operations (dry or wet), pneumatic conveying and woodworking operations that have no visible emissions, vent to the inside of a building and emit less than ten pounds per day of nonparticulate matter air contaminants.

(aa) Parts washers and rinse tanks using detergent cleaners.

(bb) Aluminum die-casting machines.

(cc) Air contaminant sources at nonproduction research and development operations with a potential to emit from any air contaminant source of less than one ton per year of any criteria pollutant per air contaminant source.

(dd) Vegetable oil storage tanks and pumps and valves used in vegetable oil processing operations.

(ee) Gasoline dispensing facilities, as defined in paragraph (H) of rule 3745-21-01 of the Administrative Code, or other motor fuel dispensing facilities that are equipped with Stage I vapor control and are not located in Ashtabula, Butler, Clark, Clermont, Cuyahoga, Delaware, Franklin, Geauga, Greene, Hamilton, Lake, Licking, Lorain, Lucas, Mahoning, Medina, Miami, Montgomery, Portage, Stark, Summit, Trumbull, Warren, or Wood counties.

(ff) Gasoline dispensing facilities, as defined in paragraph (H) of rule 3745-21-01 of the Administrative Code, or other motor fuel dispensing facilities that have an individual maximum annual throughput of less than six thousand gallons of gasoline per year.

(gg) Air separation plants.

(hh) All maintenance welding.

(ii) Arc welding where emissions of particulate matter are vented to a control device located and vented inside the building.

(jj) Passive methane venting systems from non-hazardous waste landfills.

(kk) Coating applicators with properly designed and operated particulate matter control devices and venting systems that employ less than five gallons of

only air-dried coating material in any one day provided that the applicators are:

(i) Not located in a nonattainment area for ozone,

(ii) Not subject to limits specified in or not specifically exempted from rule 3745-21-09 of the Administrative Code,

(iii) Not subject to federal standards of performance for new stationary sources; and

(iv) Not located at a facility with actual emissions of twenty-five or more tons of volatile organic materials per year and are not subject to a standard under Section 112 of the Clean Air Act.

(ll) Refrigerant reclaiming and recycling machines located at motor vehicle repair facilities.

(mm) Natural gas compressor engines used for maintenance activities with a heat input rate of no greater than ten million British thermal units per hour fired by natural gas, gasoline or distillate oil (with less than or equal to 0.5 per cent by weight sulfur).

(nn) Emergency electrical generators, emergency air compressors or emergency water pumps less than or equal to fifty horsepower that burn gasoline, natural gas, distillate oil (with less than or equal to 0.5 per cent by weight sulfur), or liquid petroleum gas.

For the purposes of this paragraph, the definitions in paragraph (A)(4)(a)(viii) of this rule apply.

(oo) Two-stroke or four-stroke, air-cooled, gasoline-powered engines no more than twenty horsepower used for lawnmowers, small electric generators, compressors, pumps, minibikes, snowthrowers, garden tractors or other similar uses.

(pp) Non-road engines, subject to the following provisos:

(i) Consistent with this exemption and pursuant to division (T)(3) of section 3745.11 of the Revised Code, permit-to-install fees for the installation of exempt non-road engines, as required under section 3745.11 of the Revised Code, are hereby waived for any permit-to-install issued for an exempt non-road engine where the permittee has not yet paid the fee.

(ii) This exemption does not apply to non-road engines that emit visible particulate emissions with opacities greater than twenty per cent as a

six-minute average as determined by USEPA method 9 of 40 CFR Part 60, Appendix A.

(qq) Internal combustion engine(s) used for locomotion installed in a marine vessel, an aircraft, a locomotive, a recreational vehicle, a motor vehicle (self-propelled vehicles designed for transporting persons or property on a street or highway), a vehicle used solely for competition, or an off-highway vehicle.

(rr) A dynamometer operation for fully assembled motor vehicles. This exemption includes dynamometer operations used as part of final assembly of new motor vehicles, roll testing of new motor vehicles, testing of vehicles used solely for competition, testing of motor vehicles for compliance with emissions standards, motor vehicle maintenance, road testing and repair dynamometers and other similar fully assembled motor vehicle dynamometer operations.

(ss) The one time use of a mobile treatment unit or vacuum truck in order to contain and/or prevent further migration of a hazardous material spill during an emergency response. This exemption shall be effective for thirty days from the date the mobile treatment unit or vacuum truck is first put into use unless the owner or operator meets one of the following requirements within the thirty day period:

(i) Applies for a permit-to-install or PTIO in accordance with rule 3745-31-02 of the Administrative Code. The exemption shall expire upon final issuance or final denial of the permit-to-install or PTIO.

(ii) Submits written notification, in accordance with paragraph (A)(4)(a)(ii) of this rule, of the applicability of a permit-by-rule in paragraph (A)(4)(e) or (A)(4)(f) of this rule. The exemption shall expire upon receipt of the written notification by the appropriate Ohio environmental protection agency district office or local air agency.

(2) Federal based exemptions

The following exemption applies regardless of the applicability of the national emission standards for hazardous air pollutants and/or the new source performance standards.

(a) Cleanup activities associated with the removal or remedial action conducted entirely on site, where such remedial action is selected and carried out in compliance with the Comprehensive Environmental Response, Compensation, and Liability Act (CERCLA) Section 121(e) and where such action meets all applicable air pollution emission limits and policies.

(3) Discretionary exemptions

(a) The director, at his/her discretion, may exempt the installation and operation of an air contaminant source or any other source associated with the clean-up of a spill or a leaking underground storage tank from the requirements to obtain a permit-to-install or PTIO.

(b) The director, at his/her discretion, may exempt the installation and operation of an air contaminant source from the requirements to obtain a permit-to-install or PTIO to deal with an emergency situation involving immediate threats to human health, property or the environment.

(c) The director, at his/her discretion, may exempt the installation and operation of an air contaminant source from the requirements to obtain a permit-to-install or PTIO for the emergency replacement of storage tanks associated with a leaking underground storage tank for a period not to exceed six months.

(d) The director, at his/her discretion and in writing, may exempt the installation and operation or modification of an air contaminant source from the requirement to obtain a permit-to-install or PTIO for a period of up to six months for purposes of research and development of more effective prevention or control of air pollutant emissions or of more efficient combustion of coal.

(e) A temporary source that, as so ordered by the director at his/her discretion, is to be operated for the purpose of testing air contaminant pollution emissions so that a suitable control technology can be ascertained and will not operate for more than two calendar years.

(f) The director, at his/her discretion and in writing, may exempt the temporary modification and operation of an air contaminant source from the requirements to obtain a permit-to-install or PTIO for a period of up to sixty days for the purpose of evaluating new production feasibility and/or air quality impacts from the temporary modification. A request for this exemption shall be made in writing and shall provide a detailed description of the proposed temporary modification to the air contaminant source, the time period over which the modification will occur, any changes in air emissions from the air contaminant source as a result of the temporary modification, and the ambient impact of the emissions from the air contaminant source as a result of the temporary modification. The director may require that performance tests be conducted during the period of the temporary modification.

(g) The director, at his/her discretion and in writing, may exempt any treatability studies or on-site response actions (cleanup operations) that meet all

applicable air emission limits and policies from the requirement to obtain a permit-to-install or PTIO. Anyone requesting this exemption must provide the director with sufficient information to make this decision.

(4) Permit-by-rule exemptions

The following air contaminant sources are exempt from the requirement to obtain a permit-to-install or PTIO. These exemptions are valid only as long as the owner or operator complies with all of the permit-by-rule general provisions, meets the qualifying criteria defined in the applicable permit-by-rule and complies with all of the requirements under the applicable permit-by-rule specific provisions. Upon request by the director, the owner or operator of a facility that has exceeded the permit-by-rule thresholds or that the director finds is causing or may cause a public nuisance in violation of rule 3745-15-07 of the Administrative Code shall submit an application for a permit-to-install or PTIO.

These exemptions do not, however, exempt any air contaminant source from requirements of the Clean Air Act, including being considered for purposes of determining whether a facility constitutes a major source or is otherwise regulated under Chapter 3745-77 of the Administrative Code or any requirement to list insignificant activities and emission levels in a Title V permit application. In addition, this rule does not relieve the owner or operator from the requirement of including the emissions associated with the exempt sources into any major NSR permitting action.

(a) General provisions

These general provisions apply to all owner or operators who are utilizing one or more of the permit-by-rule exemptions listed in paragraphs (A)(4)(b) to (A)(4)(l) of this rule.

(i) Recordkeeping requirements

The owner or operator shall collect and maintain the records described for each air contaminant source exempted under paragraph (A)(4) of this rule and these records shall be retained in the owner or operator's files for a period of not less than five years, unless otherwise specified in each exemption. These records shall be made available to the director or any authorized representative of the director for review during normal business hours.

(ii) Notification requirements for new installations

For the purposes of this paragraph, a new permit-by-rule air contaminant source is an air contaminant source installed after the promulgation date of any new applicable permit-by-rule or July 29,

2005, whichever comes later. The owner or operator of a new permit-by-rule air contaminant source electing to use an applicable permit-by-rule exemption shall submit a written notification in a form and manner prescribed by the director prior to installation of the air contaminant source. This notification, or form, shall be submitted to the appropriate Ohio environmental protection agency district office or local air agency, and shall contain the following information, at a minimum:

(a) The owner or operator's and the facility contact's name;

(b) The facility mailing address and telephone number;

(c) The location of the air contaminant source(s);

(d) A description of the air contaminant source, including any pollution control(s); and

(e) A statement by the owner or operator that indicates which permit-by-rule applies to the air contaminant source.

(iii) Notification requirements for existing permitted sources

The owner or operator of an air contaminant source which is operating under an existing permit-to-install, PTIO and/or permit-to-operate may continue to operate in compliance with that permit or may submit a written request to the Ohio environmental protection agency to revoke any such individual permit or permits and to allow the air contaminant source to operate under the permit-by-rule provisions. The director may revoke a permit-to-install, PTIO and/or permit-to-operate if the permittee requests revocation, agrees to meet all permit-by-rule qualifying and operating conditions, and the director determines that the revocation will not result in the violation of any applicable laws. When a permittee requests a revocation pursuant to this paragraph, the director, without prior hearing, shall make a final determination on the request and inform the permittee in writing. If the director agrees with the request to operate under the permit-by-rule, then the permit-by-rule becomes applicable to the permittee on the date the existing permit-to-install, PTIO and/or permit-to-operate are revoked.

(iv) Notification requirements for existing permit-by-rule sources

The owner or operator of an air contaminant source that is operating under one of the permit-by-rules that existed prior to July 29, 2005 (emergency electrical generators, injection and compression molding, crushing and screening plants, soil-vapor extraction and soil-liquid extraction) and desires to continue operating under the permit-by-rule

shall submit a written notification which contains all of the elements required in paragraph (A)(4)(a)(ii) of this rule. This notification shall be submitted to the appropriate Ohio environmental protection agency district office or local air agency and shall be submitted by July 29, 2006.

(v) Records retention requirements

Each record of any monitoring data, testing data, and support information required pursuant to a specific permit-by-rule shall be retained for a period of five years from the date the record was created. Support information shall include, but not be limited to, all calibration and maintenance records and all original strip-chart recordings for continuous monitoring instrumentation, and copies of all reports required by the specific permit-by-rule. Such records may be maintained in computerized form.

(vi) Reporting requirements

The owner or operator shall submit required reports in the following manner:

(a) Reports of any monitoring and/or recordkeeping information required by a specific permit-by-rule shall be submitted to the appropriate Ohio environmental protection agency district office or local air agency.

(b) Except as otherwise may be provided in a permit-by-rule specific reporting requirements paragraph of a specific permit-by-rule, a written report of any deviations (excursions) from emission limitations, operational restrictions, qualifying criteria, and control equipment operating parameter limitations that have been detected by the testing, monitoring, and recordkeeping requirements specified in the permit-by-rule shall be submitted to the appropriate Ohio environmental protection agency district office or local air agency within thirty days of the date the deviation occurred. The report shall describe the specific limitation and/or operational restriction exceeded, the probable cause of such deviation, and any corrective actions of preventive measures that have been or will be taken.

(vii) Scheduled maintenance/malfunction reporting

Any scheduled maintenance of air pollution control equipment shall be performed in accordance with paragraph (A) of rule 3745-15-06 of the Administrative Code. The malfunction of any emissions units or any

associated air pollution control system(s) shall be reported to the appropriate Ohio environmental protection agency district office or local air agency in accordance with paragraph (B) of rule 3745-15-06 of the Administrative Code. Except as provided in that rule, any scheduled maintenance or malfunction necessitating the shutdown or bypassing of any air pollution control system(s) shall be accompanied by the shutdown of the emissions unit(s) that is served by such control system(s).

(viii) Definitions. For the purposes of the permit-by-rule exemption in paragraph (A)(4)(b) of this rule, the following definitions apply. These definitions are in addition to terms defined for this chapter in rule 3745-31-01 of the Administrative Code:

(a) "Emergency" means:

(i) A public emergency caused by flooding, damaging winds or tornado, fire, or other natural disaster; or

(ii) An electric power outage due to a failure of the electrical grid, local supply equipment failure, facility equipment failure; or

(iii) Conditions where a regional transmission organization notifies electric distributors that an emergency exists or may occur and it is necessary to implement emergency procedures for voluntary load curtailments by customers within Ohio, in response to unusually low frequency, equipment overload, capacity or energy deficiency, unacceptable voltage levels, or other emergency conditions leading to a potential electrical blackout; or

(iv) Any situation that the director determines to be an immediate threat to human health, property, or the environment.

(b) "Emergency electrical generator," "emergency water pump," or "emergency air compressor," means, respectively, an electrical generator, water pump, or air compressor powered by an emergency internal combustion engine.

(c) "Emergency internal combustion engine" means a stationary reciprocating engine or stationary turbine engine, whose operation is limited to emergency situations and readiness testing and maintenance. An engine used for non emergency use (for instance to produce peaking power or used in a non emergency energy assistance program is not an emergency internal combustion engine under this definition.

(b) Emergency electrical generators, emergency water pumps, or emergency air compressors powered by internal combustion engines greater than fifty horsepower (37.3 Kilowatts) where each engine operates at any one facility for no more than five hundred hours per rolling twelve-month period and where such engine burns gasoline, natural gas, distillate oil (with less than or equal to 0.5 per cent by weight sulfur), or liquid petroleum gas and that maintains the following records:

(i) Monthly records that contain the rolling twelve-month hours of operation; and

(ii) Records that show the type of fuel used and the sulfur content (in per cent by weight) of any distillate oil used.

(c) Equipment used for injection and compression molding of resins where:

(i) The facility does not qualify for the exemption under paragraph (A)(1)(k) or (A)(1)(m) of this rule; and

(ii) The facility uses no more than one thousand pounds of VOC in external mold release agents and flatting spray per rolling twelve-month period; and

(a) The facility uses no thermoset resins and no more than six million pounds of thermoplastic resins (e.g., polyethylene, polypropylene, polycarbonate, and polyvinyl chloride, etc.) per rolling twelve-month period in injection machines at the facility (this type of molding operation involves materials that soften and melt upon heating or pressurization heating with no chemical change and no permanent change in physical properties. It does not involve curing, thermosetting or cross-linking.); or

(b) The facility uses no thermoplastic resins and no more than five hundred thousand pounds of thermoset resins (e.g., polyesters, polyurethanes, epoxy resins, etc.) per rolling twelve-month period in injection and compression molding machines at the facility (these types of molding operations use a thermoset resin and involve a chemical reaction, usually involving heat, that converts the material (e.g., polyesters, polyurethanes, epoxy resins, etc.) to a solid, insoluble state using a hardening or curing operation.); or

(iii) No more than three tons of VOCs per rolling twelve-month period are emitted from injection and compression molding machines at the facility, including VOCs emitted as calculated by using emission factors approved by the Ohio environmental protection agency; and

(iv) The facility maintains monthly records that contain the rolling twelve-month usage of thermoplastic resins, thermosetting resins and VOCs in external mold release agents and flatting spray used in all injection and compression molding machines at the facility, and the Ohio environmental protection agency approved emission factors used to calculate the emissions.

(d) Nonmetallic mineral processing plants permit-by-rule

(i) Qualifications

A nonmetallic mineral processing plant, as defined under 40 CFR Part 60, Subpart OOO, that meets the following qualifications is eligible to use this permit-by-rule:

(a) Fixed sand and gravel plants and crushed stone plants (including concrete and asphalt paving plants) with capacities, as defined in 40 CFR 60.671, of twenty-three megagrams per hour (twenty-five tons per hour) or less;

(b) Portable stone and gravel plants and crushed stone plants (including concrete and asphalt paving plants) with capacities, as defined in 40 CFR 60.671, of one hundred thirty-six megagrams per hour (one hundred fifty tons per hour) or less;

(c) Common clay plants and pumice plants with capacities, as defined in 40 CFR 60.671, of nine megagrams per hour (ten tons per hour) or less; and

(d) Fixed and portable soil screening plants with capacities, as defined in 40 CFR 60.671, of one hundred thirty-six megagrams per hour (one hundred fifty tons per hour) or less.

(ii) Requirements

A nonmetallic mineral processing plant identified in paragraph (A)(4)(d)(i) of this rule shall either employ a baghouse, wet scrubber, water sprays or combination thereof that is designed and operated to emit no more than ten per cent opacity from stack or fugitive emission points, or employ an enclosed design that is designed and operated to emit no more than fifteen per cent opacity from stack or fugitive emission points, and that maintain the following daily records:

(a) Material throughput in tons per day; and

(b) Pressure drop readings across the control device as applicable; and

(c) Meter readings of quantities of water used for wet scrubbing and spray applications as applicable; and

(d) Operating hours of the crushing and grinding equipment.

(e) Soil-vapor extraction remediation activities located at facilities that have total combined emission rates less than fifteen pounds of OCs per day are hereby exempted from the permit-to-install requirements for a period of eighteen months from the beginning of vapor extraction activities so long as the owner or operator provides the director with the following information prior to beginning actual construction:

(i) A description and the location of the remediation site.

(ii) A description of the nature and type of contamination at the site.

(iii) A description of the vapor extraction processes to be used in the remediation activities.

(iv) An estimate of the air contaminant emissions in parts per million by volume, pounds per hour and tons per year.

(v) A description of the costs of the vapor control equipment to be used to control emissions from the remediation activities.

(vi) A description of the projected start date of the remediation project, a list of the project milestones and an estimate of how long the remediation activities will operate.

(vii) A notice of when the soil-vapor extraction remediation activities begin, when major project milestones are met and when the remediation activities are completed.

(f) Soil-liquid extraction remediation activities located at facilities that have total combined emission rates less than fifteen pounds of OCs per day are hereby exempted from the permit-to-install requirements for a period of eighteen months from the beginning of the liquid extraction activities so long as the owner or operator provides the director with the following information prior to beginning actual construction:

(i) A description and the location of the remediation site.

(ii) A description of the nature and type of contamination at the site.

(iii) A description of the liquid extraction and liquid-vapor stripping processes to be used in the remediation activities.

(iv) An estimate of the air contaminant emissions in parts per million by volume, pounds per hour and tons per year.

(v) A description of the costs of the vapor control equipment to be used to control emissions from the remediation activities.

(vi) A description of the projected start date of the remediation project, a list of the project milestones and an estimate of how long the remediation activities will operate.

(vii) A notice of when the soil-liquid extraction remediation activities begin, when major project milestones are met and when the remediation activities are completed.

(g) Auto body refinishing facility permit-by-rule

(i) Qualifications

An auto body refinishing facility that meets all of the following qualifications is eligible to use this permit-by-rule:

(a) The facility has two or fewer paint spray booths used for painting.

(b) The facility does not do more than fifty jobs per week.

(c) The facility does not use more than three thousand gallons combined of all coatings, solvents, and other VOC containing materials in any calendar year.

(d) The facility performs all painting operations in enclosed spray booth(s) which are designed to confine and direct the paint overspray, fumes, and vapors to a powered ventilation system and are equipped with either a dry filtration or water wash system(s) to capture paint overspray.

(e) The facility applies any paint or coatings by one of the following means; high volume low pressure (HVLP) spray equipment, or electrostatic application equipment.

(f) The exhaust stack(s) of each paint spray booth at the facility:

(i) Is equipped with a fan designed to achieve an exhaust flow capacity of at least ten thousand cubic feet per minute.

(ii) Discharges air contaminants in a vertical direction, without obstructions like rain caps, goose neck exhaust, or other obstructions.

(iii) Has a stack height which is at least sixteen feet, as measured from ground level to the point of discharge to the atmosphere.

(iv) Has a point of discharge no closer than sixty feet to the nearest facility property line.

(ii) Applicable emission limitations and/or control requirements

(a) The applicable rules, emission limitations and control requirements that apply to the facility subject to this permit-by-rule are defined in the following table:

--

Applicable Rule(s)	Applicable Emission Limitations/Control Requirements
Paragraph (A)(3) of rule 3745-31-05 of the Administrative Code	Facility emissions of VOC shall not exceed nine pounds per hour and 11.7 tons per year. Facility emissions of combined HAPs shall not exceed nine pounds per hour and 11.7 tons per year. Facility emissions of a single HAP shall not exceed 4.5 pounds per hour and 5.85 tons per year.
Paragraph (U)(1) of rule 3745-21-09 of the Administrative Code	This operation is exempt from the requirements of this rule pursuant to paragraph (U)(2)(c) of rule 3745-21-09 of the Administrative Code.
Rule 2745-21-18 of the Administrative Code	The provisions of this rule are only applicable to facilities located in Butler, Clark, Clermont, Greene, Hamilton, Miami, Montgomery and Warren counties.

(iii) Operational requirements

(a) The owner or operator of the facility shall regularly maintain the spray painting application equipment, exhaust filtration systems, and spray booths in accordance with the recommended procedures and maintenance intervals of the respective manufacturers in order to minimize air contaminant emissions.

(b) Paint application equipment shall be cleaned using one or more of the following means:

(i) In a device that remains closed at all times when not in use.

(ii) In a system that discharges nonatomized cleaning solvent into a waste container that remains closed when not in use.

(iii) In a reservoir that allows for disassembly and cleaning of application equipment and that is kept closed when not in use.

(iv) In a system that atomizes cleaning solvent into a waste container that is fitted with a device designed to capture atomized solvent emissions.

(c) If a water wash system is employed to control paint overspray, the facility shall comply with all applicable laws pertaining to the handling, treatment, or discharge of waste water.

(d) For facilities located in Butler, Clark, Clermont, Greene, Hamilton, Miami, Montgomery and Warren counties, the operators of paint application equipment shall be trained in the use of a high volume low pressure (HVLP) sprayer or electrostatic spray equipment in accordance with the manufacturer's specifications, and the handling of a coating and any solvents used to clean the spray equipment.

(e) For facilities located in Butler, Clark, Clermont, Greene, Hamilton, Miami, Montgomery and Warren counties, the owners or operators shall store the following materials in non-absorbent, non-leaking containers and keep these containers closed at all times when not in use: fresh coatings, used coatings, solvents, VOC-containing additives and materials, VOC-containing waste materials, and cloth, paper, or absorbent applicators moistened with any of the items listed above.

(iv) Monitoring and/or recordkeeping requirements

(a) The owner or operator of the facility shall maintain annual records which list the following information for each VOC-containing material (coatings, thinners, reducers, surfacers, clean-up solvents, etc.) used or purchased by the facility in each calendar year:

(i) The name and identification number of each material.

(ii) The quantity of each material used or purchased, in gallons.

(iii) The VOC content of each material, in pounds per gallon.

(iv) The total volume, in gallons, of all VOC-containing materials used or purchased.

(b) The owner or operator of the facility shall maintain a record of the number of jobs performed per week.

(c) The owner or operator of the facility shall maintain documentation which demonstrates each exhaust stack complies with the design requirements listed in paragraph (A)(4)(g)(i)(f) of this rule.

(d) For facilities located in Butler, Clark, Clermont, Greene, Hamilton, Miami, Montgomery and Warren counties, the owner or operator shall submit documentation sufficient to demonstrate that all employees applying coatings are properly trained in the use of a high volume low pressure (HVLP) sprayer and electrostatic spray equipment and in the handling of a coating and any solvents used to clean the spray equipment. The owner or operator shall maintain a copy of this documentation on-site and make the documentation available to the Ohio environmental protection agency, or its representative, upon request.

(v) Testing requirements

(a) Compliance with the annual material usage limitation shall be based upon the recordkeeping requirements specified in paragraph (A)(4)(g)(iv)(a) of this rule.

(b) Compliance with the hourly VOC/combined HAP emission limitation is based on multiplying the maximum of one job per hour by a maximum emission factor of nine pounds VOC/combined HAP per job. Compliance with the hourly single HAP emission limitation is based on multiplying the maximum of one job per hour by a maximum emission factor of 4.5 pounds single HAP per job.

(c) Compliance with the annual tons per year VOC/combined HAP emission limitation is based on multiplying the maximum number of jobs per week, fifty, by an emission factor of nine pounds VOC/combined HAP per job by fifty-two weeks per year and dividing by two thousand pounds per ton. Compliance with the annual tons per year single HAP emission limitation is based on multiplying the maximum number of jobs per week, 50, by an emission factor of 4.5 pounds single HAP per job by fifty-two weeks per year and dividing by two thousand pounds per ton.

(h) Gasoline dispensing facility with Stage I controls permit-by-rule

(i) Qualifications

A gasoline dispensing facility, as defined in paragraph (H) of rule 3745-21-01 of the Administrative Code, which is not otherwise exempted under paragraph (A)(1)(ee) or (A)(1)(ff) of this rule, and meets all of the following conditions is eligible to use this permit-by-rule:

(a) Is located in Delaware, Franklin, Licking, Lucas, Mahoning, Stark, Trumbull, and Wood counties.

(b) Has all gasoline storage tanks equipped with submerged fill pipes, as defined in paragraph (H) of rule 3745-21-01 of the Administrative Code.

(c) Employs a Stage I vapor balance or vapor control system in accordance with paragraph (R) of rule 3745-21-09 of the Administrative Code to control the vapors displaced from the stationary storage tanks during delivery vessel transfer operations, unless exempted from Stage I requirements by one of the provisions of paragraph (R)(4) of rule 3745-21-09 of the Administrative Code.

(d) Has a gasoline throughput of less than three million eight hundred thousand gallons per year.

(ii) Applicable emission limitations and/or control requirements

(a) The applicable rules, emission limitations and control requirements that apply to the facility subject to this permit-by-rule are defined in the following table:

--

Applicable Rule(s)	Applicable Emission Limitations/Control Requirements
Paragraph (A)(3) of rule 3745-31-05 of the Administrative Code	OC emissions from the facility shall not exceed twenty-five tons per year. The facility shall employ submerged fill pipes on all gasoline storage tanks. The requirements of this rule also include compliance with the requirements of paragraph (R) of rule 3745-21-09 of the Administrative Code.
Paragraph (R) of rule 3745-21-09 of the	The control efficiency of the vapor balance

Administrative Code	or vapor control system shall be at least ninety per cent by weight for VOCs.

(iii) Operational restrictions

The facility shall comply with the following operational restrictions for the Stage I vapor control system:

(a) The vapor balance system shall be kept in good working order and shall be used at all times during the transfer of gasoline.

(b) There shall be no leaks in the delivery vessel pressure/vacuum relief valves and hatch covers.

(c) There shall be no leaks in the vapor lines or liquid lines during the transfer of gasoline.

(d) The transfer of gasoline from a delivery vessel to a stationary storage tank shall be conducted by use of submerged fill into the storage tank. The submerged fill pipe(s) are to be installed so they are within six inches of the bottom of the storage tank.

(e) All fill caps shall be in place and clamped during normal storage conditions.

(f) The owner or operator of the facility shall repair within fifteen days any leak from the vapor balance system or vapor control system which is employed to meet the requirements of paragraph (R)(1) of rule 3745-21-09 of the Administrative Code when such leak is equal to or greater than one hundred per cent of the lower explosive limit as propane, as determined under paragraph (K) of rule 3745-21-10 of the Administrative Code.

(iv) Monitoring and/or recordkeeping requirements

(a) The owner or operator of the facility shall maintain records of the results of any leak checks, including, at a minimum, the following information:

(i) Date of inspection.

(ii) Findings (may indicate no leaks discovered or location, nature, and severity of each leak).

(iii) Leak determination method.

(iv) Corrective action (date each leak repaired and reasons for any repair interval in excess of fifteen calendar days).

(v) Inspector's name and signature.

(b) The owner or operator of the facility shall maintain records of the annual gasoline and diesel/kerosene/used oil (if applicable) throughput for the facility.

(v) Permit-by-rule specific reporting requirements

(a) Any leak from the vapor balance system or vapor control system that is not repaired within fifteen days after identification shall be reported to the appropriate Ohio environmental protection agency district office or local air agency within thirty days after the repair is completed.

(b) Any owner or operator of a facility which is claiming an exemption from the Stage I vapor control requirements pursuant to paragraph (R)(4) of rule 3745-21-09 of the Administrative Code is exempt from paragraphs (A)(4)(h)(ii) to (A)(4)(h)(iv) of this rule but shall comply with the following requirements:

(i) The owner or operator shall maintain records of the quantity of gasoline delivered to the facility during each month, and shall retain these records for a period of three years.

(ii) The owner or operator shall notify the applicable Ohio environmental protection agency district office or local air agency if the gasoline throughput for any rolling twelve-month period is equal to or greater than one hundred twenty thousand gallons within forty-five days after the exceedance occurs.

(vi) Testing requirements

(a) Compliance with the annual OC emission limitation is based on multiplying the maximum annual gasoline throughput specified in this permit-by-rule (three million eight hundred thousand gallons) by an emission factor of thirteen pounds of OCs per one thousand gallons of gasoline and dividing by two thousand pounds per ton. The OC emissions from all diesel, kerosene, and used oil tank filling and dispensing operations, if present at the facility, are assumed to be negligible.

(i) Gasoline dispensing facility with Stage I and Stage II controls permit-by-rule

(i) Qualifications

A gasoline dispensing facility, as defined by paragraph (H) of rule 3745-21-01 of the Administrative Code, which is not otherwise exempted under paragraph (A)(1)(ee) or (A)(1)(ff) of this rule, and meets all of the following conditions is eligible to use this permit-by-rule:

(a) Is located in Ashtabula, Butler, Clark, Clermont, Cuyahoga, Geauga, Greene, Hamilton, Lake, Lorain, Medina, Miami, Montgomery, Portage, Summit, and Warren counties.

(b) Employs storage tanks equipped with submerged fill pipes, as defined by paragraph (H) of rule 3745-21-01 of the Administrative Code.

(c) Employs a Stage I vapor balance or vapor control system in accordance with paragraph (R) of rule 3745-21-09 of the Administrative Code, unless exempted from Stage I requirements pursuant to paragraph (R)(4) of rule 3745-21-09 of the Administrative Code.

(d) Employs a CARB certified Stage II vapor control system, as defined by paragraph (H) of rule 3745-21-01 of the Administrative Code, and in accordance with paragraph (DDD) of rule 3745-21-09 of the Administrative Code, unless exempted from Stage II requirements by one of the provisions of paragraph (DDD)(4) of rule 3745-21-09 of the Administrative Code.

[Comment: The meaning of CARB certified and CARB certification used throughout this permit-by-rule shall be consistent with the definition specified by paragraph (H) of rule 3745-21-01 of the Administrative Code.]

(e) Has a gasoline throughput of less than sixteen million gallons per year.

(ii) Applicable emission limitations and/or control requirements

(a) The applicable rules, emission limitations and control requirements that apply to the facility subject to this permit-by-rule are defined in the following table:

--

Applicable Rule(s)	Applicable Emission Limitations/Control

	Requirements
Paragraph (A)(3) of rule 3745-31-05 of the Administrative Code	OC emissions from the facility shall not exceed twenty-five tons per year. The facility shall employ submerged fill pipes on all storage tanks. The requirements of this rule also include compliance with the requirements of paragraphs (R) and (DDD) of rule 3745-21-09 of the Administrative Code.
Paragraph (R) of rule 3745-21-09 of the Administrative Code	The control efficiency of the Stage I vapor balance or vapor control system shall be at least ninety per cent by weight for VOCs.
Paragraph (DDD) of rule 3745-21-09 of the Administrative Code	The control efficiency of the Stage II vapor control system shall be at least ninety-five per cent by weight for VOCs.

(iii) Operational restrictions

(a) The owner or operator shall comply with the following operational restrictions for the Stage I vapor control system:

(i) The vapor balance system shall be kept in good working order and shall be used at all times during the transfer of gasoline.

(ii) There shall be no leaks in the delivery vessel pressure/vacuum relief valves and hatch covers.

(iii) There shall be no leaks in the vapor lines or liquid lines during the transfer of gasoline.

(iv) The transfer of gasoline from a delivery vessel to a stationary storage tank shall be conducted by use of submerged fill into the storage tank. The submerged fill pipe(s) are to be installed so they are within six inches of the bottom of the storage tank.

(v) All fill caps shall be in place and clamped during normal storage conditions.

(vi) The owner or operator of the facility shall repair within fifteen days any leak from the vapor balance system or vapor control system which is employed to meet the requirements of paragraph (R)(1) of rule 3745-21-09 of the Administrative Code when such leak is equal to or greater than one hundred per cent of the lower explosive limit as propane, as determined under paragraph (K) of rule 3745-21-10 of the Administrative Code.

(b) The owner or operator shall install, operate and maintain the Stage II vapor control system in accordance with the manufacturer's specifications, the applicable CARB certification, and all requirements of paragraph (DDD)(1) of rule 3745-21-09 of the Administrative Code.

(iv) Monitoring and/or recordkeeping requirements

(a) The owner or operator shall maintain records of the results of any leak checks, including, at a minimum, the following information:

(i) Date of inspection.

(ii) Findings (may indicate no leaks discovered or location, nature, and severity of each leak).

(iii) Leak determination method.

(iv) Corrective action (date each leak repaired and reasons for any repair interval in excess of fifteen calendar days).

(v) Inspector's name and signature.

(b) The owner or operator shall maintain records as specified by paragraph (DDD)(3) of rule 3745-21-09 of the Administrative Code and any records required by the applicable CARB certification. The owner or operator does not need to maintain copies of the most recent permit-to-operate and permit-to-operate application, as required by paragraph (DDD)(3)(a) of rule 3745-21-09 of the Administrative Code if electing to operate under this permit-by-rule.

(c) The owner or operator of the facility shall maintain records of the annual gasoline and diesel/kerosene/used oil (if applicable) throughput for the facility.

(v) Permit-by-rule specific reporting requirements

(a) Any owner or operator who is claiming an exemption for a facility from the Stage I or Stage II vapor control requirements pursuant to paragraph (R)(4) or (DDD)(4) of rule 3745-21-09 of the Administrative Code shall notify the appropriate Ohio environmental protection agency district office or local air agency using the written notification procedures described in paragraph (A)(4)(a) of this rule to describe the nature of the exemption.

(b) Any leak from the vapor balance system or vapor control system that is not repaired within fifteen days after identification shall be reported to the appropriate Ohio environmental protection agency district office or local air agency within thirty days after the repair is completed.

(c) A comprehensive written report on the results of any tests performed in accordance with the testing requirements of paragraph (A)(4)(h)(vi) of this rule shall be submitted to the appropriate Ohio environmental protection agency district office or local air agency within thirty days following the completion of the tests.

(vi) Testing requirements

(a) Within sixty days after the installation or modification of a Stage II vapor control system, the owner or operator shall perform the tests specified by paragraph (DDD)(2) of rule 3745-21-09 of the Administrative Code.

At intervals not to exceed five years, the owner or operator of the facility shall repeat and demonstrate compliance with the static leak test requirements contained in appendix A to rule 3745-21-10 of the Administrative Code (unless a greater frequency is specified in the applicable CARB certification), and the dynamic pressure performance test requirements contained in appendix B to rule 3745-21-10 of the Administrative Code (unless the dynamic pressure performance test is not applicable to the specific Stage II vapor control system, as specified in the applicable CARB certification).

Not later than thirty days prior to any required tests, the owner or operator of the facility shall submit a test notification to the appropriate Ohio environmental protection agency district office or local air agency. The test notification shall describe the proposed test methods and procedures, the time and the date of the tests, and the person who will be conducting the tests. Failure to submit such notification prior to the tests may result in the Ohio environmental protection agency's refusal to accept the results of the tests. Personnel from the appropriate Ohio environmental protection agency district office or local air agency shall be permitted to witness the tests, examine the testing equipment, and acquire data and information during the tests. After completion of any tests, the facility shall complete and retain on site a copy of the post test

inspection form contained in appendix C to rule 3745-21-10 of the Administrative Code.

(b) The owner or operator of the gasoline dispensing facility shall perform and comply with any vapor control system tests (i.e., static leak tests, air-to-liquid ratio, etc.) specified in the applicable CARB certification for the vapor control system installed. The tests shall be performed at the frequency specified in the CARB certification. If the applicable CARB certification for the vapor recovery system does not include such testing requirements, the owner or operator shall, at a minimum, comply with the static leak and dynamic pressure test requirements at intervals specified in paragraph (DDD)(2) of rule 3745-21-09 of the Administrative Code.

(c) Compliance with the annual OC emission limitation is based on multiplying the maximum annual gasoline throughput specified in this permit-by-rule (sixteen million gallons) by an emission factor of 3.1 pounds of OCs per thousand gallons of gasoline and dividing by two thousand pounds per ton. The OC emissions from all diesel, kerosene, and used oil tank filling and dispensing operations, if present at the facility, are assumed to be negligible.

(vii) Miscellaneous requirements

(a) All Stage II vapor control systems employed at facilities operating under this permit-by-rule, including all associated underground and above ground plumbing, shall be installed, tested, operated and maintained in accordance with the applicable CARB certification. Copies of CARB certification documents, including executive orders, approval letters, equipment advisories, and equivalent test procedures are available from the appropriate Ohio environmental protection agency district office or local air agency upon request.

(j) Boiler and heater permit-by-rule

(i) Qualifications

Boilers, preheaters, air heaters, water heaters, or heaters used for other heat exchange media that meet all of the following qualifications are eligible to use this permit-by-rule:

[Comment: Air contaminant sources which meet the definition of process heater as specified in 40 CFR Part 60, Subpart Dc are not eligible to use this permit-by-rule.]

(a) The maximum rated heat input capacity of the air contaminant source is greater than ten million British thermal units per hour and less than or equal to one hundred million British thermal units per hour.

(b) The air contaminant source is capable of burning only natural gas.

(c) The emissions from the air contaminant source consist entirely of the products of fuel combustion.

(d) Air contaminant sources with a maximum rated heat input capacity of greater than fifty million British thermal units per hour shall be equipped with low-NOx burners or other combustion control techniques designed to meet an emission limitation of not greater than 0.050 pound of nitrogen oxides per million British thermal units of heat input.

(ii) Applicable emission limitations and/or control requirements

(a) The applicable rules, emission limitations, and control requirements that apply to each air contaminant source subject to this permit-by-rule are defined in the following table:

--

Applicable Rule(s)	Applicable Emission Limitations/Control Requirements
Paragraph (A) of rule 3745-17-07 of the Administrative Code	The visible particulate matter emission limitations specified by this rule are less stringent than the visible particulate matter emission limitation established pursuant to paragraph (A)(3) of rule 3745-31-05 of the Administrative Code.
Paragraph (B) of rule 3745-17-10 of the Administrative Code	Particulate matter emissions shall not exceed 0.020 pound per million British thermal units of actual heat input.
Paragraph (B) of rule 3745-23-06 of the Administrative Code	Units meeting the permit-by-rule qualification criteria satisfy the latest available control techniques and operating practices pursuant to the rule.
Paragraph (A) of rule 3745-18-06 of the Administrative Code	Air contaminant sources are exempt from this rule when natural gas is the only fuel burned.
Paragraph (A)(3) of rule 3745-31-05 of the Administrative Code	Particulate matter emissions shall not exceed 8.76 tons per year. Nitrogen oxides emissions shall not exceed 5.0 pounds per hour and 21.90 tons per year. Carbon

	monoxide emissions shall not exceed 8.24 pounds per hour and 36.07 tons per year. OC emissions shall not exceed 1.08 pounds per hour and 4.72 tons per year. Sulfur dioxide emissions shall not exceed 0.06 pound per hour and 0.26 ton per year. Visible particulate matter emissions shall not exceed five per cent opacity, as a six-minute average. The requirements of this rule also include compliance with the requirements of rule 3745-18-06, rule 3745-23-06, and paragraph (B) of rule 3745-17-10 of the Administrative Code.
40 CFR Part 60, Subpart Dc	This regulation does not specify emission limitations for air contaminant sources that only fire natural gas.

(iii) Monitoring and/or recordkeeping requirements

(a) The owner or operator shall maintain, at the location of the air contaminant source, documentation showing the maximum rated heat input capacity of the air contaminant source(s) and evidence that the air contaminant source(s) can only fire natural gas.

(b) The owner or operator shall maintain monthly records of the total amount of natural gas fired for the air contaminant source(s).

(iv) Permit-by-rule specific reporting requirements

(a) For air contaminant sources installed after July 29, 2005, the owner or operator electing to use this permit-by-rule shall report the following, in accordance with 40 CFR Part 60, Subpart Dc, to the appropriate Ohio environmental protection agency district office or local air agency at the appropriate times:

(i) Construction date (no later than thirty days after such date).

(ii) Actual start-up date (within fifteen days after such date).

(iii) Date of performance testing (if required, at least thirty days prior to testing).

(iv) The maximum rated heat input capacity of the air contaminant source(s) and the type of fuel(s) fired (no later than thirty days after installation date).

(v) Testing requirements

(a) Compliance with the hourly emission limitations is based on multiplying the maximum hourly gas firing capacity of the air contaminant source (in million cubic feet per hour) by the emission factor specified by the United States environmental protection agency in Section 1.4 of the "Compilation of Air Pollutant Emission Factors (AP-42)", (in pounds per million cubic feet fired) for each pollutant. Compliance with the pounds per million British thermal units particulate emission limitation is based on dividing the filterable particulate emission factor specified by the United States environmental protection agency in Section 1.4 of the "Compilation of Air Pollutant Emission Factors (AP-42)" by one thousand twenty. If required by the Ohio environmental protection agency, the owner or operator shall demonstrate compliance with the pounds per million British thermal units and hourly emission limitations of this permit-by-rule in accordance with the appropriate test methods specified in 40 CFR Part 60, Appendix A.

(b) Compliance with the annual emission limitations shall be assumed as long as compliance with the pound per million British thermal units and hourly emission limitations are maintained. These annual emission limitations represent the emissions calculated at the maximum capacity of the equipment and eight thousand seven hundred sixty hours per year of operation.

(c) If required by the Ohio environmental protection agency, compliance with the visible particulate emission limitations shall be demonstrated in accordance with USEPA method 9 of 40 CFR Part 60, Appendix A.

(k) Small printing facility permit-by-rule

(i) Qualifications

A printing facility that meets the following qualifications is eligible to use this permit-by-rule:

(a) The facility has one or more printing lines which utilize only the screen, digital, flexographic, letterpress, non-heatset lithographic, or heatset lithographic printing processes, and which do not utilize add-on emission control equipment.

(b) The facility emits no more than the following tons of VOCs as demonstrated by either calculating actual facility-wide emissions,

using methods approved by the Ohio environmental protection agency, or by electing to comply with the material usage limitations specified in paragraph (A)(4)(k)(i)(d) of this rule:

(i) No more than ten tons of VOCs per calendar year from all printing processes; and

(ii) For a facility in Ashtabula, Cuyahoga, Geauga, Lake, Lorain, Medina, Portage, or Summit counties; less than 3.0 tons of VOCs from all letterpress and lithographic printing processes (including emissions from cleaning solutions used on lithographic and/or letterpress printing lines and fountain solutions) per rolling twelve-month period.

(c) The facility emits no more than five tons of a single HAP and ten tons of combined HAPs in any calendar year as demonstrated by either calculating actual facility-wide emissions, using methods approved by the Ohio environmental protection agency, or by electing to comply with the material usage limitations specified in paragraph (A)(4)(k)(i)(d) of this rule.

(d) In lieu of calculating emissions to demonstrate compliance with the annual facility emission limitations specified in paragraphs (A)(4)(k)(i)(b) and (A)(4)(k)(i)(c) of this rule, the owner or operator may elect to qualify the facility for this permit-by-rule by meeting the following material usage limitations for all materials employed at the facility:

(i) Uses no more than one thousand three hundred thirty-three gallons of materials containing the same single HAP and no more than two thousand six hundred sixty-seven gallons of materials containing any HAPs in any calendar year.

(ii) Operates only heatset offset lithographic printing lines and uses no more than twenty thousand pounds in any calendar year, except when the facility is located in Ashtabula, Cuyahoga, Geauga, Lake, Lorain, Medina, Portage, or Summit counties, then five thousand four hundred pounds per rolling twelve-month period, of ink, cleaning solvent, and fountain solution additives combined; or

(iii) Operates only non-heatset offset lithographic printing lines and uses no more than two thousand eight hundred fifty gallons in any calendar year, except when the facility is located in Ashtabula, Cuyahoga, Geauga, Lake, Lorain, Medina, Portage, or Summit counties, then seven hundred

sixty-eight gallons per rolling twelve-month period, of cleaning solvent, and fountain solution additives combined; or

(iv) Operates only digital printing lines and uses no more than two thousand four hundred twenty-five gallons in any calendar year of solvent from inks and clean-up solutions and other solvent-containing materials combined; or

(v) Operates only screen printing lines and uses no more than two thousand eight hundred fifty gallons in any calendar year of solvent from inks and clean-up solutions and other solvent-containing materials combined; or

(vi) Operates only letterpress printing lines and uses no more than two thousand eight hundred fifty gallons in any calendar year, except when the facility is located in Ashtabula, Cuyahoga, Geauga, Lake, Lorain, Medina, Portage, or Summit counties, then no more than seven hundred sixty-eight gallons per rolling twelve-month period, of solvent from inks and clean-up solutions and other solvent-containing materials combined; or

(vii) Operates only water-based or ultraviolet (UV)-cured material flexographic printing lines and uses no more than eighty thousand pounds in any calendar year of water-based inks, coatings, and adhesives, combined; or

(viii) Operates only solvent based material flexographic printing lines and uses no more than twenty thousand pounds in any calendar year of solvent from inks, dilution solvents, coatings, cleaning solutions and adhesives, combined; or

(ix) Operates any combination of screen, digital, flexographic, letterpress, non-heatset lithographic, or heatset lithographic printing lines and the facility uses no more than the most stringent of the material usage limitations contained in paragraphs (A)(4)(k)(ii) to (A)(4)(k)(viii) of this rule for the type of air contaminant source(s) at the facility.

(ii) Applicable emission limitations and/or control requirements

(a) The applicable rules, emission limitations and control requirements that apply to the facility subject to this permit-by-rule are defined in the following table:

--

Applicable Rule(s)	Applicable Emission Limitations/Control Requirements
Paragraph (A)(3) of rule 3745-31-05 of the Administrative Code	Facility emissions shall not exceed ten tons of VOC, five tons of a single HAP and ten tons of combined HAPs for any calendar year; except for facilities located in Ashtabula, Cuyahoga, Geauga, Lake, Lorain, Medina, Portage, or Summit counties, where total VOC emissions from all lithographic and/or letterpress printing operations shall not equal or exceed 3.0 tons per rolling twelve-month period.
Paragraph (Y)(2)(b) of rule 3745-21-09 of the Administrative Code (flexographic presses only)	Exempt from the requirements of paragraph (Y)(1) of rule 3745-21-09 of the Administrative Code since the qualifying criteria ensure that the combined maximum usage of coatings and inks in all presses at the facility is less than one hundred forty-eight tons per year.
Paragraph (A)(3) of rule 3745-21-22 of the Administrative Code (letterpress and lithographic printing lines located in Ashtabula, Cuyahoga, Geauga, Lake, Lorain, Medina, Portage, or Summit counties only)	Exempt from the requirements of rule 3745-21-22 of the Administrative Code since the qualifying criteria ensure that the actual VOC emissions from all letterpress and lithographic printing operations at the facility are less than 3.0 tons per rolling twelve-month period.

(iii) Monitoring and/or recordkeeping requirements

(a) The owner or operator of the printing facility shall maintain annual records at the facility that list the following information for each graphic arts material (ink, fountain solution additives, clean-up solvents, etc.) employed in the facility during each calendar year. In addition, the records required under paragraphs (A)(4)(k)(iii)(a)(i) to (A)(4)(k)(iii)(a)(iii) of this rule shall be maintained on a monthly basis for lithographic and/or letterpress printing lines located in Ashtabula, Cuyahoga, Geauga, Lake, Lorain, Medina, Portage, or Summit counties.

(i) The name and identification number of each material employed.

(ii) The quantity of each material employed, in gallons or pounds.

(iii) The OC content of each material, in pounds per gallon, or per cent, by weight.

(iv) The individual HAP content for each HAP-containing material, in pounds of individual HAP per gallon of material.

(v) The total combined HAP content of each material, in pounds of total HAP per gallon of material.

(vi) For lithographic and/or letterpress printing lines located in Ashtabula, Cuyahoga, Geauga, Lake, Lorain, Medina, Portage, or Summit counties, a twelve-month rolling summation, for all other lines and counties, an annual (calendar year) summation of usage in gallons, or pounds, of each graphic arts material if the facility elects to demonstrate compliance with the material usage limitations specified in paragraph (A)(4)(k)(i)(d) of this rule; or

(vii) For lithographic and/or letterpress printing lines located in Ashtabula, Cuyahoga, Geauga, Lake, Lorain, Medina, Portage, or Summit counties, a twelve-month rolling summation, for all other lines and counties, an annual (calendar year) summation of total facility emissions of VOC, individual HAP, and combined HAP from all graphic arts materials employed if the facility elects to calculate actual emissions to demonstrate compliance with the emission limitations specified in paragraphs (A)(4)(k)(i)(b) and (A)(4)(k)(i)(c) of this rule.

(iv) Permit-by-rule specific reporting requirements

(a) If a small printing facility electing to operate under this permit-by-rule should elect to operate under the permit-by-rule provisions for a mid-size printing facility specified by paragraph (A)(4)(l) of this rule, the owner or operator of such facility shall comply with the notification requirements of paragraph (A)(4)(a)(ii) of this rule prior to operating under the permit-by-rule provisions for mid-size printing facilities.

(v) Testing Requirements

(a) Compliance with the annual material usage limitations shall be based upon the recordkeeping requirements specified in paragraph (A)(4)(k)(iii)(a) of this rule.

(b) For screen, letterpress, and non-heatset lithographic printing, compliance with the annual VOC emission limitation is based on the annual material usage limitations, in gallons, multiplied by a maximum VOC content of 7.0 pounds per gallon, and divided by two thousand pounds per ton. For digital printing, compliance

with the annual VOC emission limitation is based on the annual material usage limitations, in gallons, multiplied by a maximum VOC content of 7.5 pounds per gallon, and divided by two thousand pounds per ton. For water-based or ultraviolet (UV)-cured flexographic printing, compliance with the annual VOC emission limitation is based on the annual material usage limitation, in pounds, multiplied by an assumed maximum VOC content of twenty-five per cent, and divided by two thousand pounds per ton. For solvent-based flexographic printing and heatset lithographic printing, compliance with the annual VOC emission limitation is based on the annual material usage limitation, in pounds, multiplied by an assumed maximum VOC content of one hundred per cent, and divided by two thousand pounds per ton. For all printing types, compliance with the annual HAP emission limitations is based on the annual material usage limitations specified in paragraph (A)(4)(k)(i)(c)(i) of this rule, in gallons, multiplied by a maximum HAP content of 7.5 pounds per gallon, and divided by two thousand pounds per ton.

(c) An owner or operator of the facility electing to demonstrate compliance with the annual (calendar year) or rolling twelve-month summation VOC, annual (calendar year) HAP, and combined annual (calendar year) HAP emission limitations by calculating the actual facility emissions may use the actual material VOC contents and usage rates from records required by paragraph (A)(4)(k)(iii) of this rule. The calculations shall be performed using methods approved by the Ohio environmental protection agency.

(l) Mid-size printing facility permit-by-rule

(i) Qualifications

A printing facility that meets the following qualifications is eligible to use this permit-by-rule:

(a) The facility has one or more printing lines which utilize only the screen, digital, flexographic, letterpress, non-heatset lithographic, or heatset lithographic printing processes, and which do not utilize add-on emission control equipment.

(b) The facility emits no more than twenty-five tons of VOCs, five tons of a single HAP and 12.5 tons of combined HAPs in any rolling, twelve-month period as demonstrated by either calculating actual facility-wide emissions, using methods approved by the Ohio environmental protection agency, or by electing to comply with the

material usage limitations specified in paragraph (A)(4)(l)(i)(c) of this rule.

(c) In lieu of calculating emissions to demonstrate compliance with the facility emission limitations specified in paragraph (A)(4)(l)(i)(b) of this rule, the facility may elect to qualify for this permit-by-rule by meeting the following material usage limitations for all materials employed at the facility in any rolling, twelve-month period:

(i) Uses no more than one thousand three hundred thirty-three gallons of materials containing the same single HAP and no more than three thousand three hundred thirty-three gallons of materials containing any HAPs.

(ii) Operates only heatset offset lithographic printing lines and uses no more than fifty thousand pounds of ink, cleaning solvent, and fountain solution additives combined; or

(iii) Operates only non-heatset offset lithographic printing lines and uses no more than seven thousand one hundred gallons of cleaning solvent and fountain solution additives combined; or

(iv) Operates only digital printing lines and uses no more than six thousand gallons of solvent from inks and clean-up solutions and other solvent containing materials combined; or

(v) Operates only screen or letterpress printing lines and uses no more than seven thousand one hundred gallons of solvent from inks and clean-up solutions and other solvent containing materials combined; or

(vi) Operates only water-based or ultraviolet (UV)-cured material flexographic printing lines and uses no more than two hundred thousand pounds of water-based inks, coatings, and adhesives, combined; or

(vii) Operates only solvent based material flexographic printing lines and uses no more than fifty thousand pounds of solvent from inks, dilution solvents, coatings, clean-up solutions and adhesives, combined; or

(viii) Operates any combination of screen, digital, flexographic, letterpress, non-heatset lithographic, or heatset lithographic printing processes and the facility uses no more than the most stringent of the material usage limits contained in paragraphs

(A)(4)(l)(iii) to (A)(4)(l)(viii) of this rule for the type of air contaminant source(s) at the facility.

(d) The facility employs cleanup solutions which meet all of the following standards:

(i) Cleanup solutions either shall not exceed thirty per cent VOC, by weight, as applied, or shall have a VOC composite partial pressure of ten millimeters of mercury (mmHg) or less at twenty degrees Celsius (sixty-eight degrees Fahrenheit).

(ii) Cleanup solutions shall be kept in covered containers during transport and storage.

(iii) Shop towels contaminated with cleanup solution shall be kept, when not in use, in covered containers.

(iv) The use of cleanup solutions not meeting the condition in paragraph (A)(4)(l)(i)(d)(i) of this rule shall not exceed a combined total of one hundred ten gallons in any rolling, twelve-month period.

(e) The facility employs fountain solutions in lithographic printing processes which meet all of the following standards for VOC content, per press type:

--

Press type	VOC limitation if no alcohol used (per cent by weight)	VOC limitation if alcohol used (per cent by weight)	VOC limitation if alcohol used (per cent by weight) and solution is refrigerated at sixty degrees Fahrenheit or less
Heatset	<5.0	<1.6	<3.0
Non-heatset, sheetfed	<5.0	<5.0	<8.5
Non-heatset, web	<5.0	Not allowed	Not allowed

(ii) Applicable emission limitations and/or control requirements

(a) The applicable rules, emission limitations, and control requirements that apply to the facility subject to this permit-by-rule are defined in the following table:

--

Applicable Rule(s)	Applicable Emission Limitations/Control Requirements
Paragraph (A)(3) of rule 3745-31-05 of the Administrative Code	Facility emissions shall not exceed twenty-five tons of VOC, five tons of a single HAP and 12.5 tons of combined HAPs for any rolling, twelve-month period.
Paragraph (Y)(2)(b) of rule 3745-21-09 of the Administrative Code (flexographic presses only)	Exempt from the requirements of paragraph (Y)(1) of rule 3745-21-09 of the Administrative Code since the qualifying criteria ensure that the combined maximum usage of coatings and inks in all presses at the facility is less than one hundred forty-eight tons per year.
Rule 3745-21-22 of the Administrative Code	The provisions of this rule are only applicable to letterpress and lithographic printing processes located in Ashtabula, Cuyahoga, Geauga, Lake, Lorain, Medina, Portage, or Summit counties where total actual VOC emissions from all lithographic and/or letterpress printing operations (including emissions from cleaning solutions used on lithographic and/or letterpress printing lines and fountain solutions) are equal to or greater than 3.0 tons of VOCs per rolling twelve-month period. The compliance date for lithographic and/or letterpress printing processes subject to rule 3745-21-22 of the Administrative Code that commenced installation before April 2, 2009 is April 10, 2010. The compliance date for all other lithographic and/or letterpress printing processes is the initial startup date of the line.

(iii) Monitoring and/or recordkeeping requirements

(a) The owner or operator of the printing facility shall maintain monthly records at the facility that list the following information for each graphic arts material (ink, fountain solution additives, cleanup solvents, etc.) employed in the facility:

(i) The name and identification number of each material employed.

(ii) The quantity of each material employed, in gallons or pounds.

(iii) The OC content of each material, in pounds per gallon, or per cent by weight.

(iv) The individual HAP content for each HAP-containing material, in pounds of individual HAP per gallon of material.

(v) The total combined HAP content of each material, in pounds of combined HAP per gallon of material.

(vi) The rolling, twelve-month summation of usage in gallons of each graphic arts material employed if the facility elects to demonstrate compliance with the material usage limitations specified in paragraph (A)(4)(l)(i)(c) of this rule; or

(vii) The rolling, twelve-month summation of total facility emissions of VOC, individual HAP, and combined HAP from all graphic arts materials employed if the facility elects to calculate actual emissions to demonstrate compliance with the emission limitations specified in paragraph (A)(4)(l)(i)(b) of this rule.

(b) Requirements only for letterpress and/or lithographic printing processes located in Ashtabula, Cuyahoga, Geauga, Lake, Lorain, Medina, Portage, or Summit counties subject to rule 3745-21-22 of the Administrative Code.

(i) The owner or operator of a heatset lithographic printing process with alcohol in the fountain solution shall measure:

(A) The VOC (alcohol) content of any altered fountain solution, at the time of alteration (e.g., addition of alcohol to a previously mixed batch), in per cent by weight, of the fountain solution employed in the press and shall maintain records of the results of the measurements at the facility for a period of five years. The alcohol content of the fountain solution shall be measured using a hydrometer. The hydrometer shall have a visual, analog, or digital readout with an accuracy of 0.5 per cent; and a standard solution shall be used to calibrate the hydrometer for the type of alcohol used in the fountain solution.

(B) On a daily basis, the temperature, in degrees Fahrenheit, of the fountain solution, using a thermometer or other temperature detection device capable of reading to 0.5 degrees Fahrenheit, if the owner or operator refrigerates the fountain solution. Records of the results of the

measurements shall be maintained at the facility for a period of five years.

(ii) The owner or operator of a lithographic printing process shall maintain fountain solution preparation records, for a period of five years, by choosing one of the following methods.

For purposes of this rule, a fountain solution that is continuously blended with an automatic mixing unit is considered to be the same batch until such time that the recipe or mix ratio is changed.

(A) For an owner or operator maintaining a recipe log for each batch of fountain solution prepared for use in the press:

(1) A recipe log that identifies all recipes used to prepare the as-applied fountain solution. Each recipe shall be maintained in the recipe log for a period of five years from the date the recipe was last prepared for a press. Each recipe shall clearly identify the following: (1) VOC content of each concentrated alcohol substitute, added to make the batch of fountain solution, based upon the manufacturer's laboratory analysis using USEPA method 24; (2) The proportions in which the fountain solution is mixed, including the addition of alcohol and/or water. The proportion may be identified as a volume when preparing a discrete batch or may be identified as the settings when an automatic mixing unit is employed; and (3) The calculated VOC content of the final, mixed recipe.

(2) Identification of the recipe used to prepare each batch of fountain solution for use in the press.

(3) The date and time when the batch was prepared.

(4) An affirmation the batch was prepared in accordance with the recipe.

(B) For an owner or operator not maintaining a recipe log in accordance with paragraph (A)(4)(l)(iii)(b)(ii)(A) of this rule, for each batch of fountain solution prepared for use in the press:

(1) The volume and VOC content of each concentrated alcohol substitute, added to make the batch of

fountain solution, based upon the manufacturer's laboratory analysis using USEPA method 24.

(2) The volume of alcohol added to make the batch of fountain solution.

(3) The volume of water added to make the batch of fountain solution.

(4) The calculated VOC content of the final, mixed batch.

(5) The date and time the batch was prepared.

(iii) The owner or operator of a lithographic and/or letterpress printing process shall maintain records, for a period of five years, of one of the following for all cleaning solutions employed in all the lithographic and/or letterpress printing process:

(A) For an owner or operator maintaining a recipe log for each batch of cleaning solution prepared:

(1) A recipe log that identifies all recipes used to prepare the as-applied cleaning solution. Each recipe shall be maintained in the recipe log for a period of five years from the date the recipe was last prepared. Each recipe shall clearly identify the following: (1) VOC content of each cleaning solution, based upon the manufacturer's laboratory analysis using USEPA Method 24; or (2) the VOC composite partial vapor pressure of each cleaning solution, based upon the method under paragraph (A)(4)(l)(v)(d)(iii) of this rule.

(2) Identification of the recipe used to prepare each batch of cleaning solution.

(3) The date and time when the batch was prepared.

(4) An affirmation the batch was prepared in accordance with the recipe.

(B) For an owner or operator not maintaining a recipe log, for each batch of cleaning solution prepared for use in the press, records of the VOC content or VOC composite

partial vapor pressure and the date and time the batch was prepared.

(iv) The owner or operator of an offset lithographic and/or letterpress printing process shall maintain monthly records of the following information:

(A) The total amount, in gallons, of all the cleaning solutions employed; and

(B) The total amount, in gallons, of all the cleaning solutions employed that exceeds the allowable VOC content or VOC composite vapor pressure.

(iv) Reporting requirements only for letterpress and/or lithographic printing processes located in Ashtabula, Cuyahoga, Geauga, Lake, Lorain, Medina, Portage, or Summit counties subject to rule 3745-21-22 of the Administrative Code.

The owner or operator shall notify the director of any exceedance(s) of the following applicable requirements within forty-five days after the instance occurs, and shall include a copy of the record showing the instance:

(a) For a heatset web offset lithographic printing press determining alcohol content via hydrometer measurement, each hydrometer measurement that shows an exceedance of the alcohol content limitation.

(b) For a heatset web offset lithographic printing press complying via refrigerated fountain solution, each temperature reading that shows an exceedance of the temperature limitation.

(c) For an offset lithographic printing press, each calculated VOC content that exceeds the VOC content limitation for fountain solutions.

(d) For an offset lithographic or letterpress printing press, each instance when an exceedance of the VOC content or VOC composite partial vapor pressure for cleaning solution occurs.

(v) Testing requirements

(a) Compliance with the rolling, twelve-month material usage thresholds and/or emission limitations shall be based upon the

recordkeeping requirements specified in paragraph (A)(4)(l)(iii)(a) of this rule.

(b) For screen, letterpress, and non-heatset lithographic printing, compliance with the annual VOC emission limitation is based on the annual material usage limitations, in gallons, multiplied by a maximum VOC content of 7.0 pounds per gallon, and divided by two thousand pounds per ton. For digital printing, compliance with the annual VOC emission limitation is based on the annual material usage limitations, in gallons, multiplied by a maximum VOC content of 7.5 pounds per gallon, and divided by two thousand pounds per ton. For water-based or UV-cured flexographic printing, compliance with the annual VOC emission limitation is based on the annual material usage limitation, in pounds, multiplied by an assumed maximum VOC content of twenty-five per cent, and divided by two thousand pounds per ton. For solvent-based flexographic printing and heatset lithographic printing, compliance with the annual VOC emission limitation is based on the annual material usage limitation, in pounds, multiplied by an assumed maximum VOC content of one hundred per cent, and divided by two thousand pounds per ton. For all printing types, compliance with the annual HAP emission limitations is based on the annual material usage limitations specified in paragraph (A)(4)(l)(i)(c)(i) of this rule, in gallons, multiplied by a maximum HAP content of 7.5 pounds per gallon, and divided by two thousand pounds per ton.

(c) An owner or operator of the facility electing to demonstrate compliance with the annual VOC, HAP, and combined HAP emission limitations by calculating the actual facility emissions may use the actual material VOC contents and usage rates from records required by paragraph (A)(4)(l)(iii) of this rule. The calculations shall be performed using methods approved by the Ohio environmental protection agency.

(d) Testing requirements only for letterpress and/or lithographic printing processes located in Ashtabula, Cuyahoga, Geauga, Lake, Lorain, Medina, Portage, or Summit counties subject to rule 3745-21-22 of the Administrative Code.

(i) The owner or operator of an offset lithographic printing process shall determine compliance with the VOC content of the as-applied fountain solution requirements by one of the methods in paragraphs (A)(4)(l)(v)(d)(i)(A) to (A)(4)(l)(v)(d)(i)(C) of this rule except when paragraph (A)(4)(l)(v)(d)(i)(D) is applicable:

(A) USEPA method 24 shall be used to determine the VOC content of the as-applied fountain solution;

(B) If diluted prior to use, a calculation shall be performed for VOC content that combines USEPA method 24 analytical data for the concentrated materials used to prepare the as-applied fountain solution and the proportions in which they are mixed to make the as-applied fountain solution. The analysis of the concentrated material(s) may be performed by the supplier(s) of those material(s). The analytical data may be derived from a material safety data sheet (MSDS) or equivalent information from the supplier as long as it is based on USEPA method 24 results; or

(C) If not diluted prior to use, the owner or operator shall use formulation information provided by the supplier, such as a MSDS sheet or equivalent information from the supplier. In the event of a dispute between information provided by the supplier and data obtained by USEPA method 24, the data obtained by USEPA method 24 shall be employed.

(D) For any offset lithographic printing press that is subject to the alcohol limit requirements, when adding alcohol to a fountain solution batch previously tested in accordance with one of the compliance test methods contained in paragraphs (A)(4)(l)(v)(d)(i)(A) to (A)(4)(l)(v)(d)(i)(C) of this rule, in lieu of the methods in paragraphs (A)(4)(l)(v)(d)(i)(A) to (A)(4)(l)(v)(d)(i)(C) of this rule, the owner or operator shall determine the VOC (alcohol) content of the altered fountain solution using a hydrometer.

(ii) The owner or operator of an offset lithographic and/or letterpress printing process shall determine compliance with the VOC content of cleaning solutions requirements by one of the following methods:

(A) USEPA method 24 shall be used to determine the VOC content of the cleaning solution;

(B) If diluted prior to use, a calculation shall be performed for VOC content that combines USEPA method 24 analytical data for the concentrated materials used to prepare the cleaning solution and the proportions in which they are

mixed to make the as-applied cleaning solution. The analysis of the concentrated material(s) may be performed by the supplier(s) of those material(s). The analytical data may be derived from a material safety data sheet (MSDS) or equivalent information from the supplier as long as it is based on USEPA method 24 results; or

(C) If not diluted prior to use, the owner or operator shall use formulation information provided by the supplier, such as MSDS sheet or equivalent information from the supplier. In the event of a dispute between information provided by the supplier and data obtained by USEPA method 24, the data obtained by USEPA method 24 shall be employed.

(iii) The owner or operator of an offset lithographic and/or letterpress printing process shall determine compliance with the VOC composite partial vapor pressure of cleaning solutions requirements by one of the following methods:

(A) If diluted prior to use, calculate the VOC composite vapor pressure of the as-applied solvent by using the formula for "VOC composite vapor pressure" as follows:

(1) Determine the identity and quantity of each compound in a blended organic solvent by using ASTM D2306, or by using ASTM E260 for organics and ASTM D3792 for water content, if applicable, or the manufacturer's product formulation data.

(2) Determine the vapor pressure of each pure VOC component by using ASTM D2879 or publications such as "Perry's Chemical Engineer's Handbook," "CRC Handbook of Chemistry and Physics," or "Lange's Handbook of Chemistry."

(3) Calculate the VOC composite partial pressure of the solvent by using the formula for "VOC composite partial pressure." For the purpose of this calculation, the blended solvent shall be assumed to be an ideal solution where Raoult's Law applies. The partial vapor pressures of each compound at twenty degrees Celsius (sixty-eight degrees Fahrenheit) shall be used in the formula. The VOC composite partial pressure shall be calculated as follows:

$$PP_c = \sum_{i=1}^{n} \frac{(W_i)(VP_i)/MW_i}{\frac{W_w}{MW_w} + \frac{W_e}{MW_e} + \sum_{i=1}^{n} \frac{W_i}{MW_i}}$$

Where:

Wi = Weight of the "i"th VOC compound, in grams.

Ww = Weight of water, in grams.

We = Weight of exempt compound, in grams.

MWi = Molecular weight of the "i"th VOC compound, in grams per gram-mole.

MWw = Molecular weight of water, in grams per gram-mole.

MWe = Molecular weight of the "e"th exempt compound, in grams per gram- mole.

PPc= VOC composite partial vapor pressure at twenty degrees Celsius (sixty-eight degrees Fahrenheit), in mm Hg.

VPi = Vapor pressure of the "i"th VOC compound at twenty degrees Celsius (sixty-eight degrees Fahrenheit), in mm Hg.

(B) If not diluted prior to use, the owner or operator shall use formulation information provided by the supplier, such as a material safety data sheet (MSDS) or equivalent information from the supplier as long as it is based on results determined in accordance with the procedure under paragraph (A)(4)(l)(v)(d)(iii)(A) of this rule.

(5) De minimis exemption

Air contaminant sources which meet the requirements of rule 3745-15-05 of the Administrative Code and section 3704.011 of the Revised Code are exempt from the requirements of this chapter.

Effective: 08/26/2010

R.C. 119.032 review dates: 12/01/2011

CERTIFIED ELECTRONICALLY
Certification

08/16/2010
Date

Promulgated Under: 119.03
Statutory Authority: 3704.03(F), 3704.03(G)
Rule Amplifies: 3704.03(G), 3704.03(F), 3704.03(A)
Prior Effective Dates: 7/5/73, 1/1/74, 11/07/79, 6/14/82, 8/15/82, 9/18/87, 8/14/89, 10/8/93, 4/20/94, 6/1/94, 11/18/94, 4/12/96, 4/27/98, 06/18/01, 11/30/01, 10/17/03, 7/29/05, 11/03/06, 12/01/06, 6/30/08

3745-31-04 **Applications.**

(A) Applications for permits-to-install and PTIOs required by rule 3745-31-02 of the Administrative Code shall contain such information as the director deems necessary to determine whether the criteria of rule 3745-31-05 of the Administrative Code are met and shall be made on forms prepared by the Ohio environmental protection agency.

(B) Applications for permits-to-install and PTIOs shall be signed by the following:

(1) In the case of a corporation, a principal executive officer of at least the level of vice president, or the duly authorized representative, if such representative is responsible for the overall operation of the facility.

(2) In the case of a partnership, a general partner.

(3) In the case of sole proprietorship, the proprietor.

(4) In the case of a municipal, state, federal or other governmental facility, the principal executive officer, the ranking elected official, or other duly authorized employee.

(C) The signatures shall constitute personal affirmation that all statements or assertions of fact made in the application are true and complete, comply fully with applicable state requirements, and shall subject the signatory to liability under applicable state laws forbidding false or misleading statements.

(D) PTIO applications for grain and feed processing operations and fertilizer mixing operations.

(1) A single PTIO application may be submitted for the following sources:

(a) Shellers, hammer mills and aspirated bagging operations and other air contaminant sources subject to rule 3745-17-11 of the Administrative Code and which are located at a stationary source which constitutes a grain and feed processing operation.

(b) Air contaminant sources which are subject to rule 3745-17-11 of the Administrative Code and which are located at a stationary source which constitutes a fertilizer mixing operation.

(2) A PTIO application for air contaminant sources of fugitive dust at grain and feed processing operations or a fertilizer mixing operation and which are subject to rule 3745-17-08 of the Administrative Code shall be submitted in accordance with applicable law.

Effective: 05/29/2014

R.C. 119.032 review dates: 01/10/2014 and 05/29/2019

CERTIFIED ELECTRONICALLY
Certification

05/19/2014
Date

Promulgated Under: 119.03
Statutory Authority: 3704.03(F), 3704.03(G)
Rule Amplifies: 3704.03(G), 3704.03(F), 3704.03(A)
Prior Effective Dates: 1/1/74, 12/5/80, 8/15/82, 9/18/87, 10/31/96, 10/17/03, 11/3/06, 12/1/06, 6/30/08

3745-31-05 **Criteria for decision by the director.**

[Comment: For dates of non-regulatory government publications, publications of recognized organizations and associations, federal rules, and federal statutory provisions referenced in this rule, see the "Incorporation by Reference" section at the end of rule 3745-31-01 of the Administrative Code.]

(A) Permit-to-install or PTIO

The director shall issue a permit-to-install or PTIO, on the basis of the information appearing in the application, or information gathered by or furnished to the Ohio environmental protection agency, or both, if he/she determines that the installation, modification or operation of the air contaminant source will:

(1) Not prevent or interfere with the attainment or maintenance of applicable ambient air quality standards; and

(2) Not result in a violation of any applicable laws, including but not limited to:

(a) Emission standards adopted by the Ohio environmental protection agency;

(b) Federal standards of performance for new stationary sources adopted by the administrator of the United States environmental protection agency pursuant to Section 111 of the Clean Air Act and the regulations promulgated thereunder;

(c) Requirements pertaining to installation of major stationary sources or major modifications in attainment and nonattainment areas as contained in rule 3745-31-10 to rule 3745-31-27 of the Administrative Code.

(d) National emission standards for hazardous air pollutants adopted by the administrator of the United States environmental protection agency pursuant to Section 112 of the Clean Air Act and the regulations promulgated thereunder (including 40 CFR Part 61 and 40 CFR Part 63);

(3) Employ BAT, when applicable, in accordance with the following:

(a) BAT shall be evaluated, determined and required in either the initial permit-to-install or PTIO issued for an air contaminant source or when a modification of the air contaminant source results in the issuance of a permit-to-install or PTIO, except:

(i) BAT is not required if the air contaminant source was installed on or before January 1, 1974;

(ii) BAT is not required if the air contaminant source was installed or modified on or after August 3, 2006 and has the potential to emit, taking into account air pollution controls installed on the source, less than ten tons per year of emissions of an air contaminant or precursor of an air contaminant for which a national ambient air quality standard has been adopted under the Clean Air Act;

(iii) If the only requirement to obtain a permit-to-install or PTIO is due to the following, any existing BAT determination, when applicable, remains in effect and BAT shall not be reevaluated and redetermined:

(a) A modification as a result of the requirements of paragraph (QQQ)(1)(b) of rule 3745-31-01 of the Administrative Code; or

(b) The requirements of paragraph (F) of this rule; or

(c) An administrative modification.

(b) For air contaminant sources subject to an existing BAT determination, BAT shall be reevaluated and redetermined when a modification of the air contaminant source(s) occurs.

(c) Except as provided in paragraph (A)(3)(b) of this rule, BAT shall not be reevaluated and redetermined when a PTIO is renewed, notwithstanding a modification as defined in rule 3745-31-01 of the Administrative Code. However, any existing BAT determination remains in effect.

(d) BAT may be reevaluated and redetermined at any time, in accordance with the definition of BAT contained in rule 3745-31-01 of the Administrative Code, based on data available at the time the air contaminant source was initially installed or most recently modified, whichever occurs later.

(e) Any reevaluated and redetermined BAT shall be in effect upon completion of the physical change or change in the method of operation or, when a physical change for change in the method of operation is not applicable, upon issuance of the permit-to-install or PTIO. Prior to completion of the physical change or change in the method of operation or issuance of the permit-to-install or PTIO, any existing BAT determination remains in effect.

(B) During operation, the air contaminant source shall be in compliance with applicable rules and laws or if either required by rule or when the director determines it is necessary, the owner or operator shall be required to submit an approvable compliance plan, as required by division (G) of section 3704.03 of the Revised Code, for incorporation into the permit terms and conditions. A compliance plan shall be approvable where it shows to the satisfaction of the director that:

(1) Operation of the air contaminant source under the compliance plan will result in compliance with all applicable requirements and laws as expeditiously as practicable but no later than any date required by applicable law;

(2) All reasonable interim control measures are identified; and

(3) Where applicable, is consistent with and at least as stringent as any compliance schedule contained in any judicial consent decree or administrative order to which the air contaminant source is subject.

(C) Conditional PTIOs

If a new source that has been constructed, installed, located or modified in accordance with the provisions of a permit-to-install or PTIO, and otherwise in accordance with applicable law, is not subject to Chapter 3745-77 of the Administrative Code, is unable to comply with the terms and conditions of the permit and/or applicable law as of the date the source began operation, the director may grant a conditional PTIO to operate such source provided the owner or operator provides sufficient information to demonstrate:

(1) The period is used to remedy any defect which prevents such compliance and the applicant demonstrates that compliance with emission standards prescribed by applicable law will be achieved as expeditiously as practicable; and

(2) Any reasonably available alternative operating procedures and interim control measures have been used or will be used to reduce excess emissions; and

(3) The continued operation of the source pursuant to the conditional PTIO will not endanger or threaten to endanger human health.

Conditional PTIOs shall contain such terms and conditions as the Ohio environmental protection agency determines necessary and appropriate.

(D) Special terms and conditions including federally enforceable limitations on potential to emit

The director may impose such special terms and conditions as are appropriate or necessary to ensure compliance with the applicable laws and to ensure adequate protection of environmental quality.

(1) Special terms and conditions necessary to ensure compliance with requirements mandated by the Clean Air Act, which include regulations promulgated by the administrator there under, include synthetic minor emissions unit terms and conditions issued in a permit-to-install or PTIO and/or Federally Enforceable PTIO (FEPTIO). Such terms and conditions shall be federally enforceable and

may restrict a stationary source's potential to emit below major source thresholds, below thresholds for other Clean Air Act requirements, or place other restrictions on an air contaminant source or stationary source in order to avoid a Clean Air Act requirement(s). Federally enforceable terms and conditions, including limitations on the potential to emit of a source, will be designated as such through one of the following:

(a) Terms and conditions of a final permit-to-install issued under this chapter; or

(b) Terms and conditions of a final FEPTIO issued under this chapter; or

[Comment: In 59 FR 53586, October 25, 1994, (as revised in 60 FR 55200, October 30, 1995), the United States environmental protection agency approved rule language providing for the creation of a program for issuing federally enforceable state operating permits. See former rule 3745-35-07 of the Administrative Code. That approved rule language has been incorporated in paragraphs (D)(1) to (D)(4) of this rule. Consequently, such designated terms and conditions imposed in an FEPTIO under the approved program elements contained in the language of paragraphs (D)(1) to (D)(4) of this rule will be considered federally enforceable as of the effective date of this rule, unless and until the United States environmental protection agency later disapproves the language.]

(c) Rules or orders of the director that are submitted to and approved by the administrator as revisions to the Ohio state implementation plan under Section 110 and 112(l) of the Clean Air Act.

(2) In order to be federally enforceable, a limitation on the potential to emit of an air contaminant source or stationary source must:

(a) Specify an annual limit on emissions from the source;

(b) Specify a short-term limit on emissions for each pollutant to be restricted, and specify a short-term limit on production or operation, provided that for purposes of limiting potential to emit, acceptable short-term limitations on production or operation shall include but not be limited to:

(i) A thirty-day summation limitation or three-hundred and sixty-five day rolling summation limitation computed each calendar day;

(ii) A monthly limitation; or

(iii) A rolling twelve-month summation limitation; and

(c) Specify adequate and enforceable methods for establishing compliance with the annual and short-term limits, using methods from 40 CFR Part 60, Appendix A or 40 CFR Part 51, Appendix M where appropriate; and

(d) Be no less stringent than any federally applicable requirement to which the source is subject; and

(e) Be contained in a permit first issued as a draft or proposed action with an opportunity for public comment under rule 3745-47-05 of the Administrative Code with concurrent notice and opportunity for comment given to the administrator of the United States environmental protection agency region five. During the public comment period, if the administrator objects that the terms and conditions of the permit are not federally enforceable, the director shall not issue the permit until such objection has been resolved.

(3) Only those terms and conditions issued in a permit under this chapter and in accordance with paragraph (D)(2) of this rule that are necessary to avoid a Clean Air Act requirement(s), including a limitation on the potential to emit of an air contaminant source or stationary source, and expressly designated as federally enforceable, shall be federally enforceable.

(4) Upon the request of the owner or operator, any of the mechanisms provided in paragraph (D)(1) of this rule shall allow for trading of emissions increases and decreases among air contaminant sources located at the same stationary source that is consistent with the Clean Air Act for the purpose of complying with a federally enforceable cap on the potential to emit of the source. Such limitations shall ensure that the trades are quantifiable and enforceable and require seven-day advance notification to the appropriate Ohio environmental protection agency district office or delegated local air agency.

(5) Relaxation of federally enforceable limitations

At such time that a particular stationary source or modification becomes a major stationary source or major modification solely by virtue of a relaxation in any federally enforceable term and condition or limitation established after August 7, 1980, on the capacity of the stationary source or modification otherwise to emit an air pollutant, such as a restriction on hours of operation, the requirements of rules 3745-31-10 to 3745-31-27 and 3745-31-30 to 3745-31-32 of the Administrative Code shall apply to the stationary source or modification as though construction had not yet commenced on the stationary source or modification.

(E) State-only enforceable limitations

The director may impose terms and conditions necessary to ensure compliance with any provisions of the statutes or regulations of the state of Ohio that are not mandated by the Clean Air Act or regulations adopted by the administrator thereunder, but such terms and conditions shall be enforceable as state law only, and shall be designated as such in the permit-to-install, PTIO or FEPTIO.

(F) Voluntary limits on allowable emissions

The owner or operator of any air contaminant source may apply for a permit-to-install or PTIO to voluntarily limit the allowable emissions from the air contaminant source or limit the type of air contaminants authorized to be emitted from the air contaminant source. The director shall act upon such application in accordance with the requirements of this rule, provided that paragraphs (A)(3) and (I) of this rule shall not apply unless the application is for the installation of a new source as defined by rule 3745-31-01 of the Administrative Code or is for a modification of an air contaminant source as defined by rule 3745-31-01 of the Administrative Code.

(G) Express permit-to-install or express PTIO processing

(1) An applicant whose air contaminant source meets the following criteria may request in writing that the air contaminant source's application receives express permit-to-install or express PTIO processing as defined in rule 3745-31-01 of the Administrative Code. In order to be considered for express processing, the air contaminant source owner or operator must:

(a) Apply for a permit-to-install or a PTIO for a source undergoing installation or modification as defined in rule 3745-31-01 of the Administrative Code.

(b) Submit a complete permit-to-install or PTIO application,

(c) Demonstrate compliance with all applicable law,

(d) Have maximum uncontrolled emissions as defined in rule 3745-31-01 of the Administrative Code of less than five tons per pollutant per each year for particulate matter, sulfur dioxide, nitrogen oxides, and OCs,

(e) Not be subject to the United States environmental protection agency new source performance standards, and

(f) Not be subject to the national emission standards for hazardous air pollutants or a United States environmental protection agency promulgated standard for HAPs.

(2) The issuance of an express permit-to-install or express PTIO does not relieve the applicant from compliance with any applicable air pollution control requirement and is at the discretion of the director.

(H) Site approval for portable sources

(1) In determining whether the director issues a site approval for a portable source, the applicant must demonstrate that the following criteria have been met:

(a) The portable source continues to comply with the currently effective Ohio environmental protection agency permit-to-install, PTIO or registration status.

(b) The portable source was issued a permit-to-install or PTIO and where BAT requirements were defined in that permit-to-install or PTIO, the portable source continues to comply with any applicable BAT requirements.

(c) The portable source owner has identified the proposed site to Ohio environmental protection agency.

(d) Ohio environmental protection agency has determined that the portable source, at the proposed site, will have an acceptable environmental impact.

(e) A public notice, consistent with Chapter 3745-47 of the Administrative Code, is published in the county where the proposed site is located.

(f) The owner of the proposed site has provided the portable source owner with approval or equivalent declaration that it is acceptable to the site owner to move the portable source to this proposed site.

(g) The portable source owner has provided Ohio environmental protection agency with fifteen days advance written notice of the relocation.

[Comment: Relocation of any portable source that results in the installation of a major stationary source or the modification of a major stationary source must also meet all applicable requirements under this chapter, including the requirement to obtain a permit-to-install or PTIO prior to relocation. Relocation of any portable source that results in the creation of a major source, as defined in rule 3745-77-01 of the Administrative Code, must also meet all applicable requirements under the Title V program contained in Chapter 3745-77 of the Administrative Code, which may include the requirement to apply for a Title V permit.]

(2) Site approvals expire and are renewed according to paragraph (C)(2) of rule 3745-31-07 of the Administrative Code.

(I) In deciding whether to grant or deny a permit-to-install or PTIO, the director may take into consideration the social and economic impact of the air contaminants, water

pollutants, or other adverse environmental impact that may be a consequence of issuance of the permit-to-install or PTIO.

(J) The director shall coordinate the review and issuance of an air pollution permit-to-install or PTIO with any other relevant Ohio environmental protection agency permit-to-install program. This coordination of an individual permit-to-install or PTIO shall involve the identification of materials to relevant programs and the coordination of the granting or denying of program separate or program combined permit-to-installs or PTIOs. A coordinated review and issuance of an air pollution permit-to-install or PTIO for an air contaminant source is typically needed for the following types of air contaminant sources and would be coordinated with the following divisions:

--

Air Contaminant Source Type	DHWM	DSW	DDAGW	DSIWM
Composting Facility	X	X	X	X
Degreasing/Cold Cleaning	X	X		
Dry Cleaning	X	X		
Gasoline Dispensing Facility	X	X		
Infectious Waste Incinerator	X	X		
Liquid Material Storage Tanks	X	X	X	
Loading Rack	X	X		
Painting Operations	X	X		
Printing Operations	X	X		
Sanitary Landfill		X	X	X
Solid Waste Incinerator		X		X
Solid Waste Transfer Facility		X	X	X
Sources with Baghouses	X			
Sources with Electrostatic Precipitators	X			
Sources with Scrubbers	X	X		
Hazardous Waste Management Unit	X	X	X	
Hazardous Waste Recycling Facility	X	X	X	

DHWM - division of hazardous waste management; DSW - division of surface water; DDAGW - division of drinking and ground waters; DSIWM - solid and infectious waste management

The director may consult with other Ohio environmental protection agency programs or other persons as he/she deems appropriate.

Replaces: Part of 3745-31-02, Part of 3745-31-10, Part of 3745-35-02, Part of 3745-35-07

Effective: 06/30/2008

R.C. 119.032 review dates: 12/01/2011

CERTIFIED ELECTRONICALLY
Certification

06/02/2008
Date

Promulgated Under: 119.03
Statutory Authority: 3704.03(F), 3704.03(G), 3704.03(T)
Rule Amplifies: 3704.03(T), 3704.03(G), 3704.03(F), 3704.03(A)
Prior Effective Dates: 7/5/73, 1/1/74, 12/7/78, 11/7/79, 6/14/82, 8/15/82, 9/18/87, 11/17/88 (Emer.), 3/9/89 (Emer.), 6/12/89, 10/8/93, 4/20/94, 10/31/94, 11/18/94, 4/12/96, 4/27/98, 6/18/01, 11/30/01, 10/17/03, 10/28/04, 11/3/06, 12/1/06

3745-31-06 **Completeness determinations, processing requirements, public participation, public notice, and issuance.**

[Comment: For dates and availability of non-regulatory government publications, publications of recognized organizations and associations, federal rules, and federal statutory provisions referenced in this rule, see paragraph (LLLLLL) of rule 3745-31-01 of the Administrative Code titled, "referenced materials."]

(A) Completeness review time restriction.

Within sixty days after the director or the director's agent or authorized representative receives an application for the issuance of a permit to install or PTIO pursuant to rules adopted under division (F) of section 3704.03 of the Revised Code, or an application to modify such a permit, the director shall determine whether the application is substantially complete or materially deficient and shall notify the applicant, in writing, of the determination. If the director fails to make such a completeness determination and provide written notice of the determination to the applicant within sixty days after the application was submitted, the applicant may submit a written request to the director for the making of such a completeness determination.

(B) Request for completeness determination.

Within thirty days after receiving a written request for the making of a completeness determination on an application under paragraph (A) of this rule, the director shall determine whether the application is substantially complete or materially deficient and, in writing, notify the applicant of the determination. If the director fails to make a completeness determination and provide written notice of the determination to the applicant within thirty days after receiving the applicant's written request for the making of the determination, the application shall be deemed to have been complete in all material respects at the time that it was submitted to the director or the director's agent or authorized representative.

(C) Materially deficient applications.

If, within the time prescribed in paragraph (A) and, if applicable, paragraph (B) of this rule, the director or the director's agent or authorized representative determines that an application is materially deficient, the director shall return the application to the applicant. The running of the time prescribed under paragraph (A) of this rule and, if applicable, paragraph (B) of this rule ceases at the time that the determination is made. If the applicant subsequently resubmits the application to the director, the time prescribed in paragraph (A) of this rule and, if applicable, paragraph (B) of this rule shall resume running at the time that the application is resubmitted. The resubmission of the application constitutes a request for the making of a completeness determination on the application. The director shall do one of the following within the time remaining pursuant to paragraph (A) and, if applicable, paragraph (B) of this rule at the time that the application is resubmitted:

(1) Make a completeness determination on the application and, in writing, notify the applicant of the determination;

(2) Issue or deny or propose to issue or propose to deny the permit or modification.

(D) Completeness date notification.

The director shall include in each written notice of the completeness of an application provided under paragraph (A), (B), or (C)(1) of this rule the date on which the application was determined to be complete.

(E) Permit decision time limits and issuance or denial.

A permit-to-install or PTIO shall be issued, modified or denied and may be challenged in accordance with the provisions of the rules of procedure of the Ohio environmental protection agency, Chapters 3745-47 and 3745-49 of the Administrative Code.

(1) For the purposes of this paragraph, "initial construction PTIO" means a PTIO for an air contaminant source that is not currently regulated under a permit-to-install or PTIO.

(2) Permit-to-install, initial construction PTIO, or modification.

(a) The director shall issue or deny or propose to issue or deny a permit-to-install or initial construction PTIO pursuant to rules adopted under division (F) of section 3704.03 of the Revised Code, or modification, as defined in rule 3745-31-01 of the Administrative Code, of such a permit within one hundred eighty days after the date the application for the permit or modification was determined to be complete as that date is set forth in the written notice of the determination of the completeness of the application provided under paragraph (A), (B), or (C)(1) of this rule or within one hundred eighty days after the application is deemed to be complete under paragraph (B) of this rule, as appropriate. If the director fails to issue or deny or propose to issue or deny the permit or modification within the appropriate one-hundred-eighty-day period, the applicant may bring a mandamus action to obtain a judgment that orders the director to take a final action on the application.

(3) PTIO for air contaminant sources currently regulated under a permit-to-install.

(a) The director may issue or deny or propose to issue or deny a PTIO, where the applicant holds a previously issued permit-to-install for the same air contaminant source, pursuant to rules adopted under division (F) of section 3704.03 of the Revised Code as expeditiously as practicable, except when the air contaminant source is considered a modification as defined in rule 3745-31-01 of the Administrative Code, then paragraph (E)(2) of this rule shall be applicable.

(4) Express permit-to-install or express PTIO.

(a) Within sixty days of the receipt of a complete request, the director shall notify the applicant whether the air contaminant source will be accepted for express processing of a permit-to-install or PTIO pursuant to paragraph (G) of rule 3745-31-05 of the Administrative Code. Installation or construction of the air contaminant source may commence after sixty days if the applicant has not been notified or upon the issuance of the express permit-to-install or express PTIO.

(b) Within one hundred eighty days after a completed application is filed, the director shall issue or deny or propose to issue or deny an express permit-to-install or express PTIO.

(5) Administratively modified permit-to-install or PTIO.

The director may issue or deny or propose to issue or deny a permit-to-install or PTIO that meets the definition of an administrative modification in rule 3745-31-01 of the Administrative Code, pursuant to rules adopted under division (F) of section 3704.03 of the Revised Code, as expeditiously as practicable.

(6) Renewal PTIO.

(a) The director shall issue or deny or propose to issue or deny a renewal PTIO pursuant to rules adopted under division (F) of section 3704.03 of the Revised Code within one hundred eighty days after the date the application for the renewal PTIO was determined to be complete as that date is set forth in the written notice of the determination of the completeness of the application provided under paragraph (A), (B), or (C)(1) of this rule or within one hundred eighty days after the application is deemed to be complete under paragraph (B) of this rule, as appropriate. If the director fails to issue or deny or propose to issue or deny the renewal PTIO within the appropriate one hundred eighty day period, the applicant may bring a mandamus action to obtain a judgment that orders the director to take a final action on the application.

(b) In accordance with division (C) of section 119.06 of the Revised Code, when an applicant submits a timely and complete renewal application pursuant to applicable law and the terms and conditions of the PTIO, the permittee's failure to have a renewed PTIO is not a violation of this chapter. Upon expiration of the PTIO, the permittee shall continue to operate under the terms and conditions of an expired PTIO until issuance of a renewal PTIO by the director.

(F) Extension of the permit review time period for the public.

The director, upon the director's own motion or upon the written request of the applicant and in writing, may extend the time provided under paragraph (E) of

this rule for issuing or denying or proposing to issue or deny the permit or modification for an additional sixty days if a public meeting or public hearing was held on the application for the permit or modification.

(G) Extensions of the permit review time period for the applicant.

Upon the written request of the applicant, the director, in writing, may extend the time provided under paragraph (E) of this rule for issuing or denying or proposing to issue or deny the permit or modification for the additional time specified in the applicant's request for the extension.

(H) Public participation/notification requirements.

The director shall do the following:

(1) Notify the public, by advertisement in a newspaper of general circulation in each county in which the proposed air contaminant source would be constructed and operated, of the application, the draft action (if issued), the ambient air impact that is expected from the nonattainment NSR permit or the PSD permit, if any, and of the opportunity to request a public hearing, comment at that public hearing or submit written comments on any draft action. This notice shall follow the requirements under Chapter 3745-49 of the Administrative Code.

(2) Send a copy of the notice of public comment to the applicant, the administrator of the United States environmental protection agency, and to officials and agencies having jurisdiction over the location where the proposed air contaminant source would be built as follows:

(a) Any other state or local air pollution control agencies.

(b) The chief executives of the city and county where the air contaminant source would be located.

(c) Any comprehensive regional land use planning agency.

(d) Any federal land manager, Indian governing body, or state whose lands may be affected by emissions from the air contaminant source or modification.

(3) For all draft action permits-to-install or PTIOs, upon request, provide opportunity for a public hearing for interested persons to appear and submit written or oral comments on the air quality impact of the air contaminant source, alternatives to it, the control technology required, and other appropriate considerations.

(4) Consider all written comments submitted within the period specified in the notice of public comment and all comments received at any public hearing in making a final decision on the approvability of the application. The director shall make all comments available for public inspection.

(5) Notify the applicant in writing of the final determination and make such notification available for public inspection.

(I) Federal land manager notification requirements.

For purposes of new source review of any new major stationary source or major modification that may affect any Class I area and would be constructed in an area that is designated attainment, nonattainment, or unclassified under 40 CFR 81.336, in any review under rule 3745-31-17 of the Administrative Code with respect to visibility protection and analysis of a Class I area, the director shall provide the following:

(1) Written notification to all affected federal land managers of any proposed new major stationary source or major modification that may affect any Class I area. Such notification shall be made in writing and include a copy of all information relevant to the permit application within thirty days of receipt of and at least sixty days prior to the public hearing held by the Ohio environmental protection agency on the application for an installation permit. Notifications under this paragraph shall include an analysis of the anticipated impacts on visibility in any Class I area. This written notification may be waived with documented approval from all affected federal land managers in advance of the sixty day review period prior to the public hearing.

(2) Where the Ohio environmental protection agency receives advance notification (e.g. early consultation with the source prior to submission of the application or notification of intent to monitor under rule 3745-31-14 of the Administrative Code) of a permit application for a source that may affect any Class I area, the director shall notify all affected federal land managers no later than thirty days after such advance notification.

(3) The director shall consider any analysis performed by the federal land manager, provided within thirty days of the federal land manager application notification and analysis required under paragraph (I)(1) of this rule, demonstrating whether the proposed new major stationary source or major modification has an impact on visibility in any Class I area. Where the director finds that such an analysis does not demonstrate to the satisfaction of the director that an impact on visibility will result in a Class I area, the Ohio environmental protection agency shall either provide an explanation of the finding or give notice as to where the explanation can be obtained in the notice for the public hearing.

Effective: 05/29/2014

R.C. 119.032 review dates: 01/10/2014 and 05/29/2019

CERTIFIED ELECTRONICALLY
Certification

05/19/2014
Date

Promulgated Under: 119.03
Statutory Authority: 3704.03(F), 3704.03(G)
Rule Amplifies: 3704.03(G), 3704.03(F), 3704.03(A)
Prior Effective Dates: 7/5/73, 1/1/74, 12/7/78, 11/7/79, 6/14/82, 8/15/82, 9/18/87, 11/17/88 (Emer.), 3/9/89 (Emer.), 6/12/89, 10/8/93, 4/20/94, 10/31/94, 11/18/94, 4/12/96, 4/27/98, 6/18/01, 11/30/01, 10/17/03, 10/28/04, 11/3/06, 12/1/06, 6/30/08

3745-31-07 **Termination, revocation, expiration, renewal, revision and transfer.**

(A) Termination.

(1) Authorization to install or modify an air contaminant source(s) contained in an issued permit-to-install or PTIO shall terminate within eighteen months of the effective date of the issuance of the permit-to-install or PTIO that authorized the installation or modification, if the owner or operator has not undertaken a continuing program of installation or modification or has not entered into a binding contractual obligation to undertake and complete within a reasonable time a continuing program of installation or modification of the air contaminant source.

(2) The director may administratively modify a permit-to-install or PTIO to extend these dates of termination by up to twelve months if the applicant submits, within a reasonable time before the termination date, a request for an administrative modification, containing information that, in the judgment of the director, adequately justifies an extension of time. No appeal taken from denial of extension of a termination date shall prevent termination of a permit during the period between denial of extension and final disposition of the appeal unless prohibited by any court or administrative body having jurisdiction over the matter.

(3) A permit-to-install, permit-to-operate or PTIO may be terminated in accordance with paragraph (A)(2) or (B)(1)(c) of rule 3745-31-02 of the Administrative Code.

(B) Revocation.

(1) The director may revoke a permit-to-install or PTIO, if the director concludes at any time that any applicable laws have been or are likely to be violated.

(2) The director may also revoke, or partially revoke, a permit-to-install, PTIO or variance if the permittee requests revocation for cause and the director determines that granting the requested revocation will not result in the violation of any applicable laws. When a permittee requests a revocation, the director, without prior hearing, shall make a final determination on the application.

(3) Revocation, pursuant to paragraph (B)(1) of this rule, of a permit-to-install, PTIO or variance shall be final thirty days after service of notice to the permit holder.

(4) The Ohio environmental protection agency shall afford a prompt hearing to any permit holder whose permit-to-install or PTIO is revoked, except as described in paragraph (B)(2) of this rule, in the manner prescribed in Chapter 3745-49 of the Administrative Code.

(5) A variance issued pursuant to rule 3745-31-09 of the Administrative Code may be revoked if any of the following occur:

(a) The director determines that any of the terms, conditions, standards, or requirements of rule 3745-31-09 of the Administrative Code have been or will be violated or that circumstances have changed so that the applicant is no longer eligible for a variance under that rule.

(b) The signatory fails to file an interim report as required pursuant to paragraph (G)(4) of rule 3745-31-09 of the Administrative Code, or if such report fails to satisfy the director that the source is making satisfactory progress.

(c) False or misleading statements are made in an interim report required pursuant to paragraph (G)(4) of rule 3745-31-09 of the Administrative Code.

(C) Expiration and renewal.

(1) A PTIO may be issued for a period of time consistent with the requirements of division (G) of section 3704.03 of the Revised Code, and is subject to renewal pursuant to rule 3745-31-05 of the Administrative Code.

(a) A conditional PTIO issued pursuant to paragraph (B) of rule 3745-31-05 of the Administrative Code shall be effective for such reasonable periods as the director may determine on a case-by-case basis consistent with division (G) of section 3704.03 of the Revised Code. A conditional PTIO may not be renewed; however, the effective date may be extended for such reasonable periods as the director may determine on a case-by-case basis provided the total time period of effectiveness is consistent with division (G) of section 3704.03 of the Revised Code.

(b) A FEPTIO issued pursuant to paragraph (D) of rule 3745-31-05 of the Administrative Code shall be effective for a period of time consistent with division (G) of section 3704.03 of the Revised Code but no longer than five years, and is subject to renewal.

(2) A permit-to-install does not expire and is not renewable.

(3) Any site approval for a portable source issued pursuant to paragraph (H) of rule 3745-31-05 of the Administrative Code may be issued for a period of time consistent with the requirements of division (G) of section 3704.03 of the Revised Code, and is subject to renewal pursuant to paragraph (H) of rule 3745-31-05 of the Administrative Code.

(4) Any variance issued pursuant to rule 3745-31-09 of the Administrative Code may be issued for a period of time consistent with the requirements of division (H) of section 3704.03 of the Revised Code, and is subject to renewal. A variance may be renewed only when the Ohio environmental

protection agency is satisfied that the source for which the variance was granted is making satisfactory progress toward achievement of the program specified in any compliance schedule incorporated into the variance and/or is complying with any other terms and conditions of the variance. Renewal shall be considered pursuant to rule 3745-31-09 of the Administrative Code.

(D) Revision.

(1) Any PTIO or variance issued by the director shall be subject to revision by the director in response to changes in applicable law or other factors affecting the compliance of the air contaminant source with the standards or conditions of any currently effective permit.

(2) The director may revise any site approval for a portable source issued pursuant to paragraph (H) of rule 3745-31-05 of the Administrative Code to add or delete certain portable sources or add or delete certain terms and conditions as appropriate.

(3) The director may require the owner or operator to submit a permit application pursuant to rule 3745-31-05 of the Administrative Code to fulfill the requirements of paragraph (D) of this rule.

(E) Transfer.

The transferee of any permit-to-install, PTIO or variance shall assume personally the responsibilities of the original permit holder-transferor. The Ohio environmental protection agency must be notified in writing, in a manner prescribed by the director, of any transfer of a permit once the transfer has been completed.

Effective: 05/29/2014

Five Year Review (FYR) Dates: 01/10/2014 and 05/29/2019

CERTIFIED ELECTRONICALLY
Certification

05/19/2014
Date

Promulgated Under: 119.03
Statutory Authority: 3704.03(F), 3704.03(G)
Rule Amplifies: 3704.03(G), 3704.03(F), 3704.03(A)
Prior Effective Dates: 7/5/73, 1/1/74, 12/7/78, 11/7/79, 12/5/80, 6/14/82, 8/15/82, 8/30/82, 9/18/87, 11/17/88 (Emer.), 3/9/89 (Emer.), 6/12/89, 10/8/93, 4/20/94, 10/31/94, 11/18/94, 4/12/96, 4/27/98, 6/18/01, 11/30/01, 10/17/03, 11/3/06, 12/1/06, 6/30/08

3745-31-08 **Registration status permit-to-operate.**

(A) For purposes of paragraph (B) of this rule:

(1) "Maximum potential yearly emissions" means the total weight of lead, organic compounds, particulates or sulfur dioxide which is, or in the absence of control equipment would be, emitted from an air contaminant source in any one calendar year.

(2) "Registration status" means that the source may be operated without having obtained a permit-to-operate or variance, and exists upon notification as provided by the director.

(B) Prior to June 30, 2008, the director may have placed an air contaminant source on registration status after submittal of an application for a permit-to-operate, rather than issuing a permit-to-operate, if the owner or operator of such source demonstrated to the satisfaction of the director that the source was in compliance with applicable law and if the following conditions were met:

(1) The source was not subject to any mass emissions limitation or control requirement specified within or pursuant to any applicable law; or

(2) The source was subject to a mass emissions limitation or control requirement specified solely within Chapter(s) 3745-17, 3745-18, and/or 3745-21 of the Administrative Code; the maximum potential yearly emissions of lead and organic compounds from the source was each less than five tons; and the maximum potential yearly emissions of particulates and sulfur dioxide from the source were each less than twenty-five tons.

(C) An air contaminant source placed on registration status as of the effective date of this rule may remain on registration status until removed in accordance with paragraph (D) or (E) of this rule.

(D) The director may at any time require the owner or operator of an air contaminant source which obtained registration status prior to June 30, 2008, to submit an updated application for a PTIO or variance and/or to demonstrate its continued compliance with the requirements of paragraph (B) of this rule. If the owner or operator complies with this request of the director within a reasonable period of time as specified by the director, the updated application shall be processed in accordance with applicable law, including continuation of the existing registration status if appropriate. If the owner or operator fails to comply with this request of the director within a reasonable period of time as specified by the director, the permit-to-operate application previously submitted by such owner or operator for such source shall be removed from registration status and processed in accordance with applicable law. Any subsequent permit denial or notice of application deficiency shall serve as notice to the owner or operator of the source that the permit-to-operate application for such source has in fact been removed from registration status.

(E) The director may revoke a registration status obtained prior to June 30, 2008 if the permittee requests revocation for cause and the director determines that granting the requested revocation will not result in the violation of any applicable laws. When a permittee requests a revocation pursuant to the paragraph, the director, without prior hearing, shall make a final determination on the request.

Revocation of registration status shall be final immediately after service of notice to the registration status holder.

Effective: 05/29/2014

R.C. 119.032 review dates: 01/10/2014 and 05/29/2019

CERTIFIED ELECTRONICALLY
Certification

05/19/2014
Date

Promulgated Under: 119.03
Statutory Authority: 3704.03(F), 3704.03(G)
Rule Amplifies: 3704.03(G), 3704.03(F), 3704.03(A)
Prior Effective Dates: 1/1/74, 11/7/79, 8/15/82, 6/18/01, 11/30/01, 10/17/03, 11/3/06, 12/1/06, 6/30/08

3745-31-09 **Variances on operation.**

[Comment: For dates and availability of non-regulatory government publications, publications of recognized organizations and associations, federal rules, and federal statutory provisions referenced in this rule, see paragraph (LLLLLL) of rule 3745-31-01 of the Administrative Code titled, "referenced materials".]

(A) A variance may be applied for and obtained from the director that allows operation or other use of an air contaminant source that emits an air pollutant in violation of an applicable law pursuant to the provisions of this rule, except for the following:

(1) No variance shall be granted from Chapter 3745-19 of the Administrative Code governing open burning.

(2) No variance shall be granted to a new source, as defined in rule 3745-31-01 of the Administrative Code, from any emissions limitation which was applicable to the source as a new source.

(3) No variance from any rule of the director adopted under Chapter 3704. of the Revised Code may be granted except pursuant to this rule.

(B) Applications for variances shall meet the requirements of rules 3745-31-02 and 3745-31-04 of the Administrative Code.

(1) Any variance application that fails to provide information needed to provide a factual basis for ascertaining compliance with each of the relevant requirements of this rule may be considered defective and be treated as if it had not been filed. Such application shall be returned to the applicant as expeditiously as practicable with an indication of the deficiencies therein. Further processing of the application, including issuance of a proposed or final action or the initiation of any other official response by the Ohio environmental protection agency with respect to the application, will not occur until deficiencies have been remedied.

(2) An application which seeks a variance pursuant to this rule which allows an applicant to emit an air pollutant at a specified level in excess of emissions standards prescribed by applicable law without requiring eventual compliance with such standards shall specify the level of emission sought. Any such application which fails to so specify may be treated as a deficient application as set forth in paragraph (B)(1) of this rule.

(C) Standards for granting variances.

(1) A variance for an air contaminant source may allow an applicant to do the following:

(a) Emit from such source a specified level of emissions of the particular air contaminant which exceeds the level permitted by applicable law, without achieving eventual compliance with the level permitted by applicable law.

(b) To achieve compliance with applicable law pertaining to the particular air contaminant, pursuant to a compliance schedule included as a term and condition of the variance, on a date later than the date provided by applicable law upon which compliance by such source must be achieved.

(c) To emit an air contaminant in accordance with both paragraphs (C)(1)(a) and (C)(1)(b) of this rule.

(2) A variance may be issued only if the applicant either demonstrates the requirements of paragraphs (C)(2)(a) to (C)(2)(c) of this rule, paragraph (C)(2)(e) of this rule, and paragraph (C)(2)(f) of this rule, or, demonstrates the requirements of paragraphs (C)(2)(d) to (C)(2)(f) of this rule:

(a) Either:

(i) The ambient air quality standards for the particular air contaminant to which the requested variance pertains are currently being met throughout the region affected by the emissions from the air contaminant source.

(ii) The emission of air contaminants in accordance with the variance will not prevent or interfere with the attainment of ambient air quality standards by contributing, either singly or in conjunction with other sources, to a failure to attain ambient air quality standards by the date or dates prescribed by applicable law throughout the region affected by the emissions from the air contaminant source.

(b) The emission of air contaminants in accordance with the variance will not prevent or interfere with the maintenance of ambient air quality standards by contributing, either singly or in conjunction with other sources, to a failure to maintain ambient air quality standards throughout the region affected by the emissions from the air contaminant source for the particular air contaminant to which the requested variance pertains after such ambient air quality standards are attained.

(c) The variance is necessary because compliance with the emission standard from which the variance is sought is, and, to the extent applicant has not complied with such emission standards, has been since the adoption of such emission standard, technically infeasible, economically unreasonable, or impossible because of conditions beyond the control of the applicant.

(d) Bubble concept:

(i) An alternative emission control strategy (bubble concept) is provided which will allow emissions of air contaminant from the source for which the variance is requested to exceed the level permitted by applicable law and will also require emissions of the same air contaminant from another source or sources to be less than the level(s) permitted by applicable law. The alternative emission control strategy shall do the following:

(a) Result in a reduction in actual emissions of the air contaminant from such other source or sources which is equivalent to or greater than the reduction which would occur if the source for which the variance is requested were to comply with applicable law.

(b) Result in an actual net ambient air quality improvement which is as good as, or better than, that which would occur if the source for which the variance is requested were to comply with applicable law and if all such other sources were to either comply with applicable law or maintain their actual level of emissions if such level is less than permitted by applicable law.

(c) Include applications for variances or PTIOs (or modifications of existing variances or PTIOs) for such other sources at the same facility that specify a level of allowable emissions of an air contaminant which is below the level established by applicable law and which satisfies the requirements of paragraphs (C)(2)(d)(i)(a) and (C)(2)(d)(i)(b) of this rule:

(ii) Air contaminants from different sources shall be considered to be the same for purposes of paragraph (C)(2)(d)(i) of this rule only if they are comparable in terms of type of contaminant.

(iii) Emissions of particulates of the following types shall not be considered, for purposes of paragraph (C)(2)(d)(i) of this rule to be the same as emissions of particulates of any other types:

(a) Asbestos.

(b) Beryllium.

(c) Coke oven emissions.

(d) Lead.

(e) Mercury.

(iv) Emissions of organic compounds of the following types shall not be considered, for purpose of paragraph (C)(2)(d)(i) of this rule, to be the same as emissions of organic compounds of any other types:

(a) Benzene.

(b) Vinyl chloride.

(e) Such compliance with applicable law or other terms and conditions as is required by the variance will be achieved as expeditiously as practicable.

(f) If any rule from which a variance is sought has been approved by the administrator of the United States environmental protection agency as part of the Ohio state implementation plan, the applicant must demonstrate those matters required by federal law or regulations, including, but not limited to 42 USC 7410 and 40 CFR Parts 51 and 52 for approval of a revision to the plan, except approval by the administrator or the administrator's representative as a revision to the Ohio state implementation plan.

(D) The director retains the discretion to deny the application upon consideration of evidence regarding matters specified in division (H) of section 3704.03 of the Revised Code which is submitted by the applicant, developed by the agency, or obtained from another source, even though the demonstrations required by paragraph (C) of this rule have been made.

(E) Action on applications for variance.

(1) Prior to taking any action on any application for a variance, the Ohio environmental protection agency may hold a public meeting on the proposed variance in the manner specified in Chapter 3745-49 of the Administrative Code.

(2) The director shall act on an application for a variance within six months of the filing of a complete application by issuing a proposed or final action.

(3) Variances under this rule shall be issued, denied, modified, or revoked and may be challenged in accordance with the provisions of Chapter 3745-47 or 3745-49 of the Administrative Code.

(a) In issuing, denying, modifying, or revoking any variance, the director shall state the director's reasons in writing. The decision and reasons shall be made publicly available at the cost of reproduction and handling.

(F) Variances from rules contained in the Ohio state implementation plan.

(1) A variance from a rule which has been approved by the administrator of the United States environmental protection agency as part of the Ohio state implementation plan shall not be issued unless the following occurs:

(a) Such variance has been submitted to the administrator as a revision to the Ohio state implementation plan pursuant to applicable law, including, but not limited to, 42 USC 7410 and 40 CFR Parts 51 and 52.

(b) All requirements of applicable law, including, but not limited to, 40 CFR Parts 51 and 52 have been met, except approval by the administrator or his/her representative as a revision to the Ohio state implementation plan.

(c) The variance contains a condition that the variance will not be effective until approved by the administrator or the administrator's representative as a revision of the Ohio state implementation plan.

(2) If a variance has been approved by the administrator pursuant to paragraph (F)(1) of this rule, a renewal of such variance shall not be subject to paragraph (F)(1) of this rule unless a significant difference exists between the material aspects of such variance and the renewed form of such variance. For the purposes of paragraph (F)(1) of this rule, a significant difference shall include any extension of the final compliance date of any compliance schedule, but shall not include the reduction in allowable emissions.

(G) Terms and conditions of variances.

Upon issuance of a variance authorizing emissions as described in paragraphs (C)(1)(a) to (C)(1)(c) of this rule, and upon approval thereof by the administrator as provided by paragraph (F)(1)(c) of this rule, if applicable, the director shall propose to amend the rule from which the variance is issued to provide for emissions authorized by the variance. The amended rule shall be proposed only if, in the director's judgment, such amended rule will conform to all requirements of applicable law, including, if applicable, requirements regarding implementation plans. Following rulemaking procedures mandated by law on the proposal, the director shall take such action on the proposal as is lawful and reasonable.

(1) A single variance issued pursuant to this rule for an air contaminant source may provide the applicant relief from more than one emission limitation.

(2) Except as otherwise appropriate under paragraph (C) of this rule, an approved compliance schedule shall be incorporated into any variance granted.

(3) Each variance issued pursuant to this rule and each variance or PTIO issued to another source pursuant to paragraph (C)(2)(d) of this rule shall include as terms and conditions a specified emission limit for each air contaminant for which a variance is granted and test methods for demonstrating compliance with such emissions limits.

(4) In addition to the other registration and reporting requirements of all air contaminant sources, the holder of a variance which contains a compliance schedule shall file reports every two months or as otherwise required by the Ohio environmental protection agency. Such reports shall be signed by the applicant for the variance. These reports shall demonstrate to the satisfaction of the director that the source for which the variance was issued is making consistent progress and has met all interim deadlines specified in the

compliance schedule or specified by the Ohio environmental protection agency.

(H) The possession of a variance shall not relieve the holder of responsibility to comply with all other applicable law and rules of the Ohio environmental protection agency.

(I) Variances may be revoked pursuant to paragraph (B)(5) of rule 3745-31-07 of the Administrative Code.

Effective: 05/29/2014

Five Year Review (FYR) Dates: 01/10/2014 and 05/29/2019

CERTIFIED ELECTRONICALLY
Certification

05/19/2014
Date

Promulgated Under: 119.03
Statutory Authority: 3704.03(F), 3704.03(G), 3704.03(H)
Rule Amplifies: 3704.03(G), 3704.03(F), 3704.03(A)
Prior Effective Dates: 7/5/73, 11/7/79, 12/5/80, 8/30/82, 4/12/96, 6/18/01, 10/28/04, 11/3/06, 12/1/06, 6/30/08

3745-31-10 **NSR projects at existing emissions units at a major stationary source.**

(A) The following provisions apply to NSR projects at existing emissions units at a major stationary source (other than NSR projects at a stationary source with a PAL) in circumstances where there is a reasonable possibility that a NSR project that is not part of a major modification may result in a significant emissions increase and the owner or operator elects to use the method specified in paragraph (GGGGG) of rule 3745-31-01 of the Administrative Code for calculating projected actual emissions.

(1) Before beginning actual construction of the NSR project, the owner or operator shall document and maintain a record of the following information:

(a) A description of the NSR project.

(b) Identification of the emissions unit(s) whose emissions of a regulated NSR pollutant could be affected by the NSR project.

(c) A description of the applicability test used to determine that the NSR project is not a major modification for any regulated NSR pollutant, including the baseline actual emissions, the projected actual emissions, the amount of "could have accommodated" emissions excluded under paragraph (GGGGG)(1)(c) of rule 3745-31-01 of the Administrative Code and an explanation for why such amount was excluded, and any netting calculations, if applicable.

(2) Before beginning actual construction, regardless of whether the owner or operator determines there is a reasonable possibility that a NSR project that is not part of a major modification may result in a significant emissions increase, the owner or operator shall provide a copy of the information set out in paragraph (A)(1) of this rule to the director for any of the following:

(a) New or modified emissions units where the sum of the federally enforceable potential to emit of the new or modified emissions units associated with the NSR project prior to the issuance of the NSR project's permit-to-install is greater than any one of the significant levels found in the significant definition of rule 3745-31-01 of the Administrative Code.

(b) Any emissions unit that is an existing electric utility steam generating unit.

(c) Unless required elsewhere in this rule, nothing in this paragraph shall be construed to require the owner or operator of such emissions unit to obtain any determination from the director before beginning actual construction.

(3) The owner or operator shall monitor the emissions of any regulated NSR pollutant that could increase as a result of the NSR project and that is emitted by any emissions units identified in paragraph (A)(1)(b) of this rule; and calculate and maintain a record of the annual emissions, in tons per year on a calendar year basis, for a period of five years following resumption of regular operations after the change, or for a period of ten years following resumption of regular operations after the change if the NSR project increases the design capacity or potential to emit of that regulated NSR pollutant at such emissions unit.

(4) If the emissions unit is an existing electric utility steam generating unit, the owner or operator shall submit a report to the director within sixty days after the end of each year during which records must be generated under paragraph (A)(3) of this rule setting out the emissions unit's annual emissions during the year that preceded submission of the report.

(5) If the emissions unit is an existing emissions unit other than an electric utility steam generating unit, the owner or operator shall submit a report to the director if the annual emissions, in tons per year, from the NSR project identified in paragraph (A)(1) of this rule, exceed the baseline actual emissions (as documented and maintained pursuant to paragraph (A)(1)(c) of this rule, by a significant amount for that regulated NSR pollutant, and if such emissions differ from the preconstruction projection as documented and maintained pursuant to paragraph (A)(1)(c) of this rule. Such report shall be submitted to the director within sixty days after the end of such year. The report shall contain the following:

(a) The name, address and telephone number of the major stationary source.

(b) The annual emissions as calculated pursuant to paragraph (A)(3) of this rule.

(c) Any other information that the owner or operator wishes to include in the report (e.g., an explanation as to why the emissions differ from the preconstruction projection).

(6) A "reasonable possibility" under this rule occurs when the owner or operator calculates the project to result in either:

(a) A projected actual emissions increase of at least fifty per cent of the amount that is a "significant emissions increase," as defined in rule 3745-31-01 of the Administrative Code (without reference to the amount that is a significant net emissions increase), for the regulated NSR pollutant.

(b) A projected actual emissions increase that, added to the amount of emissions excluded under paragraph (GGGGG)(3) of rule 3745-31-01 of the Administrative Code, sums to at least fifty per cent of the amount that is a "significant emissions increase," as defined under paragrapgh

(WWWWW) of rule 3745-31-01 of the Administrative Code (without reference to the amount that is a significant net emissions increase), for the regulated NSR pollutant. For a project for which a reasonable possibility occurs only within the meaning of paragraph (A)(6)(b) of this rule, and not also within the meaning of paragraph (A)(6)(a) of this rule, then provisions under paragraphs (A)(2) to (A)(5) of this rule do not apply to the project.

(B) The owner or operator of the source shall make the information required to be documented and maintained pursuant to this rule available for review upon request.

Effective: 05/29/2014

Five Year Review (FYR) Dates: 01/10/2014 and 05/29/2019

CERTIFIED ELECTRONICALLY
Certification

05/19/2014
Date

Promulgated Under: 119.03
Statutory Authority: 3704.03(F)
Rule Amplifies: 3704.03(F), 3704.03(A)
Prior Effective Dates: 4/12/96, 10/28/04, 12/1/06, 6/30/08

3745-31-11 **Attainment provisions - ambient air increments, ceilings and classifications.**

[Comment: For dates and availability of non-regulatory government publications, publications of recognized organizations and associations, federal rules, and federal statutory provisions referenced in this rule, see paragraph (LLLLLL) of rule 3745-31-01 of the Administrative Code titled, "referenced materials."]

(A) Applicability.

This rule applies to any major stationary source or major modification that is to be constructed in an area designated in 40 CFR 81.336 as attainment for an air pollutant for which the major stationary source or major modification is major.

(B) Allowable increments.

The director shall require, through the issuance of a permit-to-install pursuant to rules adopted under division (F) of section 3704.03 of the Revised Code, the emission limitations and such other measures as may be necessary to assure that, in areas designated attainment below as Class I, Class II or Class III, increases in ambient air pollutant concentration over the baseline concentration shall be limited to the following:

Maximum Allowable Increase ($\mu g/m^3$)				
Air Pollutant	Averaging Period	Class I	Class II	Class III
Particulate matter				
PM2.5	annual arithmetic mean	1	4	8
	twenty-four-hour maximum	2	9	18
PM10	annual arithmetic mean	4	17	34
	twenty-four-hour maximum	8	30	60
Sulfur dioxide	annual arithmetic mean	2	20	40
	twenty-four-hour maximum	5	91	182
	three-hour maximum	25	512	700
Nitrogen dioxide	annual arithmetic mean	2.5	25	50

For any period other than an annual period, the applicable maximum allowable increase may be exceeded during one such period per year at any one location.

(C) Ambient air ceilings.

The director, through the issuance of a permit-to-install pursuant to rules adopted under division (F) of section 3704.03 of the Revised Code, shall provide that no ambient concentration of an air pollutant shall exceed either of the following:

(1) The concentration permitted under the national secondary ambient air quality standard.

(2) The concentration permitted under the national primary ambient air quality standard, whichever concentration is lowest for the air pollutant for a period of exposure.

(D) Restrictions on area classifications.

(1) All of the following areas, if in existence of August 7, 1977, shall remain Class I areas:

(a) International parks.

(b) National wilderness areas that exceed five thousand acres in size.

(c) National memorial parks that exceed five thousand acres in size.

(d) National parks that exceed six thousand acres in size.

(2) Areas that were assigned as Class I under regulations promulgated before August 7, 1977 shall remain Class I but may be reassigned as provided in this rule.

(3) All areas of the state are designated Class II but may be redesignated as provided in this rule.

(4) The following areas may be redesignated only as Class I or II:

(a) An area that, as of August 7, 1977, exceeded ten thousand acres in size and was a national monument, a national primitive area, a national preserve, a national recreational area, a national wild and scenic river, a national wildlife refuge, a national lakeshore or seashore.

(b) A national park or national wilderness area established after August 7, 1977 that exceeds ten thousand acres in size.

(5) The extent of areas designated as Class I under paragraph (D)(1) of this rule or Class I or II under paragraph (D)(4) of this rule shall conform to any changes in the boundaries of an area that have occurred since August 7, 1977 or that may occur.

(E) Exclusions from increment consumption.

(1) The following ambient concentrations shall be excluded in determining increment compliance with a maximum allowable increase:

(a) Concentrations attributable to the increase in emissions from emissions units that have converted from the use of petroleum products, natural gas, or both by reason of an order in effect under Section 2(A) and (B) of the Energy Supply and Environmental Coordination Act of 1974 (or any

superseding legislation) over the emissions from such emissions units before the effective date of such an order.

(b) Concentrations attributable to the increase in emissions from emissions units that have converted from using natural gas by reason of natural gas curtailment plan in effect pursuant to the Federal Power Act over the emissions from such emissions units before the effective date of such plan.

(c) Concentrations of particulate matter attributable to the increase in emissions from construction or other temporary emission-related activities of new or modified emissions units.

(d) The increase in concentrations attributable to new emissions units outside the United States over the concentrations attributable to existing emissions units that are included in the baseline concentration.

(e) Concentrations attributable to the temporary increase in emissions of sulfur dioxide, particulate matter or nitrogen oxides from emissions units that are affected by Ohio state implementation plan revisions approved by the administrator of the United States environmental protection agency as meeting the criteria specified as follows:

(i) Such time is not to exceed two years in duration unless a longer time is approved by the administrator of the United States environmental protection agency.

(ii) The time period for excluding certain contributions, in accordance with paragraph (E)(1)(e)(i) of this rule, is not renewable.

(iii) No emissions increase from an emissions unit can do any of the following:

(a) Impact a Class I area or an area when an applicable increment is known to be violated.

(b) Cause or contribute to the violation of a national ambient air quality standard.

(c) Limitations under paragraphs (E)(1)(e)(iii)(a) and (E)(1)(e)(iii)(b) of this rule must be in effect at the end of the time period specified in accordance with paragraph (E)(1)(e)(i) of this rule that would ensure that the emission levels from emissions units affected by the Ohio state implementation plan revision would not exceed those levels occurring from such emissions units before the plan revision was approved.

(2) No exclusion of such concentrations shall apply more than five years after the effective date of the order to which paragraph (D)(1)(a) of this rule refers, or

the plan to which paragraph (E)(1)(b) of this rule refers, whichever is applicable. If both such order and plan are applicable, no such exclusions shall apply more than five years after the later of such effective dates.

(3) No exclusion under paragraph (E) of this rule shall occur later than nine months after August 7, 1980 unless an Ohio state implementation plan revision meeting the requirements of 40 CFR 51.166 has been submitted to the administrator of the United States environmental protection agency.

(F) Class redesignation

(1) All attainment areas of the state, except as otherwise provided under paragraph (D) of this rule, shall be designated Class II.

(2) Upon due consideration, the director may submit to the administrator of the United States environmental protection agency a proposal to redesignate to attainment any area of the state to Class I or Class II provided that:

(a) At least one public hearing has been held in accordance with procedures established in Chapter 3745-49 of the Administrative Code.

(b) Other states, Indian governing bodies and federal land managers whose lands may be affected by the proposed redesignation were notified at least thirty days prior to the public hearing.

(c) A discussion of the reasons for the proposed redesignation, including a satisfactory description and analysis of the health, environmental, economic, social and energy effects of the proposed redesignation, were prepared and made available for public inspection at least thirty days prior to the hearing, and the notice announcing the hearing contained appropriate notification of the availability of such discussion.

(d) Prior to the issuance of notice respecting the redesignation of an attainment area that includes any federal lands, the state has provided written notice to the appropriate federal land manager and afforded adequate opportunity, not in excess of sixty days, to confer with the state respecting the redesignation and to submit written comments and recommendations. In redesignating any attainment area with respect to which any federal land manager had submitted written comments and recommendations, the state shall have published a list of any inconsistency between such redesignation and such comments and recommendations (together with the reasons for making such redesignation against the recommendation of the federal land manager).

(e) The state has proposed the redesignation after consultation with the elected leadership of local and other substate general purpose governments in the attainment area covered by the proposed redesignation.

(3) Any area other than an area for which paragraph (D) of this rule restricts redesignation may be redesignated as Class III if the following applies:

(a) The redesignation would meet the requirements of paragraph (F)(2) of this rule.

(b) The redesignation has been specifically approved by the governor, after consultation with the appropriate committees of the general assembly, if it is in session, or with the leadership of the general assembly, if it is not in session, and if general purpose units of the local government representing a majority of the residents of the area to be redesignated enact legislation or pass resolutions concurring in the redesignation.

(c) The redesignation would not cause, or contribute to, a concentration of any air pollutant that would exceed any maximum allowable increase permitted under the classification of any other area or any national ambient air quality standard.

(d) Any permit application for any major stationary source or major modification, subject to review under paragraph (F)(1) of this rule, which could receive a permit under this section only if the area in question were redesignated as Class III, and any material submitted as part of that application, were available insofar as was practicable for public inspection prior to any public hearing on redesignation of the area as Class III.

Effective: 05/29/2014

R.C. 119.032 review dates: 01/10/2014 and 05/29/2019

CERTIFIED ELECTRONICALLY
Certification

05/19/2014
Date

Promulgated Under: 119.03
Statutory Authority: 3704.03(F)
Rule Amplifies: 3704.03(A), 3704.03(F)
Prior Effective Dates: 4/12/96, 12/1/06

3745-31-12 **Attainment provisions - data submission requirements.**

[Comment: For dates and availability of non-regulatory government publications, publications of recognized organizations and associations, federal rules, and federal statutory provisions referenced in this rule, see paragraph (LLLLLL) of rule 3745-31-01 of the Administrative Code titled, "referenced materials."]

(A) Applicability.

This rule applies to any major stationary source or major modification that is to be constructed in an area designated in 40 CFR 81.336 as attainment for an air pollutant for which the major stationary source or major modification is major.

(B) Data submission authority.

The owner or operator of a proposed major stationary source or major modification shall submit all information necessary to perform any analysis or make any determination required under this rule.

(C) Minimum data submission requirements.

The information required under paragraph (A) of this rule shall include the following:

(1) A description of the nature, location, design capacity and typical operating schedule of the major stationary source or major modification, including specifications and drawings showing the emissions units design and plant layout.

(2) A detailed schedule for construction of the major stationary source or major modification.

(3) For each emissions unit a detailed description as to what system of continuous emissions reduction is planned by the major stationary source or major modification, emission estimates, including maximum emissions rates and any other information as necessary to determine that BACT as applicable would be applied.

(4) The air quality impact of the major stationary source or major modification, including meteorological and topographical data necessary to estimate such impact.

(5) The air quality impacts and the nature and extent of any or all general commercial, residential, industrial and other growth that has occurred since the baseline date was set in the area the major stationary source or major modification would affect.

Effective: 05/29/2014

R.C. 119.032 review dates: 01/10/2014 and 05/29/2019

CERTIFIED ELECTRONICALLY
Certification

05/19/2014
Date

Promulgated Under: 119.03
Statutory Authority: 3704.03(F)
Rule Amplifies: 3704.03(A), 3704.03(F)
Prior Effective Dates: 4/12/96, 12/1/06

3745-31-13 **Attainment provisions - review of major stationary sources and major modifications, stationary source applicability and exemptions.**

[Comment: For dates and availability of non-regulatory government publications, publications of recognized organizations and associations, federal rules, and federal statutory provisions referenced in this rule, see paragraph (LLLLLL) of rule 3745-31-01 of the Administrative Code titled, "referenced materials."]

(A) Start construction limitations.

In accordance with this chapter, no major stationary source or major modification located in an attainment area shall begin actual construction unless, at a minimum, the requirements in rules 3745-31-01 to 3745-31-20 of the Administrative Code have been met and the stationary source has obtained a valid Ohio environmental protection agency permit-to-install.

(B) Air pollutants covered.

Rules 3745-31-10 to 3745-31-20 of the Administrative Code shall apply to any major stationary source and any major modification as defined by this chapter with respect to each regulated NSR pollutant, except as otherwise allowed in rule 3745-31-13 of the Administrative Code.

(C) Attainment/nonattainment applicability.

Rules 3745-31-10 to 3745-31-20 of the Administrative Code apply only to any major stationary source or major modification that would be constructed in an area that is designated as attainment or unclassifiable under 40 CFR 81.336.

(D) Discretionary exemption.

Upon request, the director, at the director's discretion, may exempt the following stationary sources from the requirements contained in rules 3745-31-10 to 3745-31-20 of the Administrative Code as applied to a particular major stationary source or major modification if:

(1) The major stationary source would be or is a non-profit health or non-profit educational institution or a major modification that would occur at such an institution.

(2) The stationary source or modification is a portable stationary source that has previously received a permit under requirements equivalent to those contained in rules 3745-31-10 to 3745-31-20 of the Administrative Code if the following apply:

(a) The owner or operator of the stationary source proposes to relocate and emissions of the stationary source at the new location would be temporary.

(b) The emissions from the stationary source would not exceed its allowable emissions.

(c) The emissions from the stationary source would not impact a Class I area or any area where an applicable increment is known to be violated.

(d) Reasonable written notice is given to the director prior to the relocation identifying the proposed new location and the probable duration of operation at the new location. Such notice shall be given to the director not less than thirty days in advance of the proposed relocation unless a different time duration is previously approved by the director.

(E) Stationary sources located in or impacting nonattainment areas.

Rules 3745-31-10 to 3745-31-20 of the Administrative Code do not apply to a major stationary source or major modification with respect to a particular air pollutant if the owner or operator demonstrates that, as to that air pollutant, the stationary source or major modification is located in an area designated as nonattainment under Section 107 of the Clean Air Act. This exemption does not apply to stationary sources or major modifications that are located in an attainment area that impact a nonattainment areas pursuant to paragraph (D) of rule 3745-31-23 of the Administrative Code.

(F) Temporary increases.

Rules 3745-31-10 to 3745-31-20 of the Administrative Code do not apply to a proposed major stationary source or major modification with respect to a particular air pollutant if the allowable emissions of that air pollutant from a new stationary source, or the net emissions increase of that air pollutant from a modification, would be temporary and would impact no Class I area and no area where an applicable increment is known to be violated.

(G) Class II area limitations.

The requirements contained in rules 3745-31-08 to 3745-31-10 of the Administrative Code as they relate to any maximum allowable increase for a Class II area do not apply to a modification of a major stationary source that was in existence on March 1, 1978 if the net increase in allowable emissions of each regulated NSR pollutant from the modification after the application of BACT would be less than fifty tons per year.

(H) Exemptions to preapplication ambient monitoring.

The director may exempt a proposed major stationary source or major modification from rule 3745-31-14 of the Administrative Code with respect to ambient monitoring for a particular air pollutant if the following apply:

(1) The emissions increase of the air pollutant from a new stationary source or the new emissions increase of the air pollutant from a modification would cause, in any area, air quality impacts less than the following amounts:

(a) Carbon monoxide - five hundred seventy-five $\mu g/m^3$, eight-hour average.

(b) Nitrogen dioxide - fourteen $\mu g/m^3$, annual average.

(c) Particulate matter less than 2.5 microns (PM2.5)- four $\mu g/m^3$, twenty-four-hour average [Comment: this applies only to directly emitted PM2.5].

(d) Particulate matter less than ten microns (PM10) - ten $\mu g/m^3$, twenty-four-hour average.

(e) Sulfur dioxide - thirteen $\mu g/m^3$, twenty-four-hour average.

(f) Ozone - no de minimis air quality level is provided for ozone. However, any net increase of one hundred tons per year or more of VOCs subject to the attainment provisions of this chapter would be required to perform an impact analysis including the gathering of ambient air quality data.

(g) Lead - 0.1 $\mu g/m^3$, three-month average.

(h) Fluorides - 0.25 $\mu g/m^3$, twenty-four-hour average.

(i) Total reduced sulfur - ten $\mu g/m^3$, one-hour average.

(j) Hydrogen sulfide - 0.2 $\mu g/m^3$, one-hour average.

(k) Reduced sulfur compounds - ten $\mu g/m^3$, one-hour average.

(2) The ambient concentrations of the air pollutant in the area that the stationary source or modification would affect are less than the concentrations listed in paragraph (H)(1) of this rule.

(3) The air pollutant is not listed in paragraph (H)(1) of this rule.

(4) The director determines that representative monitoring data is available.

Effective: 05/29/2014

Five Year Review (FYR) Dates: 01/10/2014 and 05/29/2019

CERTIFIED ELECTRONICALLY
Certification

05/19/2014
Date

Promulgated Under: 119.03
Statutory Authority: 3704.03(F)
Rule Amplifies: 3704.03(A), 3704.03(F)
Prior Effective Dates: 4/12/96, 10/28/04, 12/1/06

3745-31-14 **Attainment provisions - preapplication analysis.**

[Comment: For dates and availability of non-regulatory government publications, publications of recognized organizations and associations, federal rules, and federal statutory provisions referenced in this rule, see paragraph (LLLLLL) of rule 3745-31-01 of the Administrative Code titled, "referenced materials."]

(A) Applicability.

This rule applies to any major stationary source or major modification that is to be constructed in an area designated in 40 CFR 81.336 as attainment for an air pollutant for which the major stationary source or major modification is major.

(B) Criteria air pollutants that require pre-application analysis.

Any application for a major stationary source or major modification shall contain an analysis of ambient air quality in the area that the major stationary source or major modification would affect for each of the following air pollutants:

(1) For a stationary source, each criteria air pollutant that the stationary source would have the potential to emit in a significant amount;

(2) For the major modification, each criteria air pollutant for which the major modification would result in a significant net emissions increase.

(C) Non-criteria air pollutant pre-application analysis.

With respect to any air pollutant for which no national ambient air quality standard exists excluding pollutants listed under Section 112 of the Clean Air Act, the pre-application analysis shall contain such air quality monitoring data as the director determines is necessary to assess ambient air quality for that air pollutant in any area that the emissions of that air pollutant would affect.

(D) Ambient monitoring requirements.

With respect to any air pollutant, other than VOCs, if the director determines that such monitoring is necessary, the pre-application analysis shall contain air quality monitoring data (unless exempt under paragraph (H) of rule 3745-31-13 of the Administrative Code) gathered for purposes of determining whether emissions of that air pollutant would cause or contribute to a violation of the national ambient air quality standard or any maximum allowable increment.

(E) Ambient monitoring time period.

In general, the continuous air monitoring data that is required under the pre-application analysis shall have been gathered over a period of one year and shall represent the year preceding receipt of the application except that, if the director determines that a complete and adequate analysis can be accomplished with monitoring data gathered over a period shorter than one year, but not to be less

than four months, the data that is required shall have been gathered over at least that shorter period.

(F) Post approval ambient monitoring for ozone.

Any owner or operator of a proposed major stationary source or major modification of VOCs who satisfies all conditions of paragraph (A) of rule 3745-31-22 of the Administrative Code may provide post-approval monitoring data for ozone in lieu of providing pre-construction data as required under paragraph (B)(1) of this rule.

(G) Post-construction monitoring.

Any owner or operator of a major stationary source or major modification shall, after construction of the stationary source or modification, conduct such ambient monitoring as the director determines is necessary to determine the effect emissions from the stationary source or modification may have, or are having, on air quality.

(H) Operation of monitoring stations.

Any owner or operator of a major stationary source or major modification shall meet the requirements of 40 CFR Part 58, Appendix A during the operation of monitoring stations for purposes of satisfying paragraph (C) of this rule.

Effective: 05/29/2014

Five Year Review (FYR) Dates: 01/10/2014 and 05/29/2019

CERTIFIED ELECTRONICALLY
Certification

05/19/2014
Date

Promulgated Under: 119.03
Statutory Authority: 3704.03(F)
Rule Amplifies: 3704.03(A), 3704.03(F)
Prior Effective Dates: 4/12/96, 12/1/06

3745-31-15 **Attainment provisions - control technology review.**

[Comment: For dates and availability of non-regulatory government publications, publications of recognized organizations and associations, federal rules, and federal statutory provisions referenced in this rule, see paragraph (LLLLLL) of rule 3745-31-01 of the Administrative Code titled, "referenced materials."]

(A) Applicability.

This rule applies to any major stationary source or major modification that is to be constructed in an area designated in 40 CFR 81.336 as attainment for an air pollutant for which the major stationary source or major modification is major.

(B) A major stationary source or major modification shall meet each applicable emission limitation under the Ohio state implementation plan and each applicable emission standard and standard of performance under 40 CFR Parts 60, 61 and 63.

(C) The owner or operator of a new major stationary source shall apply BACT to the major stationary source for each regulated NSR pollutant that the major stationary source would have the potential to emit in significant amounts.

(D) A major modification shall apply BACT for each regulated NSR pollutant that would be a significant net emissions increase at the stationary source. This requirement applies to each proposed emissions unit at which a net emissions increase in the air pollutant would occur as a result of a physical change or change in the method of operation in the emissions unit.

(E) For phased construction NSR projects, the determination of BACT shall be reviewed and modified as appropriate no more than eighteen months prior to commencement of construction of each independent phase of the NSR project. At such time, the owner or operator of the stationary source may be required to demonstrate the adequacy of any previous determination of BACT for the stationary source.

Effective: 05/29/2014

Five Year Review (FYR) Dates: 01/10/2014 and 05/29/2019

CERTIFIED ELECTRONICALLY
Certification

05/19/2014
Date

Promulgated Under: 119.03
Statutory Authority: 3704.03(F)
Rule Amplifies: 3704.03(A), 3704.03(F)
Prior Effective Dates: 4/12/96, 10/28/04, 12/1/06

3745-31-16 **Attainment provisions - major stationary source impact analysis.**

[Comment: For dates and availability of non-regulatory government publications, publications of recognized organizations and associations, federal rules, and federal statutory provisions referenced in this rule, see paragraph (LLLLLL) of rule 3745-31-01 of the Administrative Code titled, "referenced materials."]

(A) Applicability.

This rule applies to any major stationary source or major modification that is to be constructed in an area designated in 40 CFR 81.336 as attainment for an air pollutant for which the major stationary source or major modification is major.

(B) Impact analysis.

Any owner or operator of a proposed major stationary source or major modification shall demonstrate that allowable emissions increases from the proposed major stationary source or major modification, in conjunction with all other applicable emissions increases or reductions, including secondary emissions, would not cause or contribute to air pollution in violation of:

(1) Any national ambient air quality standard.

(2) Any applicable maximum allowable increase over the baseline concentration in any attainment area.

(C) Significant impact levels.

For purposes of PM2.5, the demonstration required in paragraph (B) of this rule is deemed to have been made if the emissions increase from the new stationary source alone or from the modification alone would cause, in all areas, air quality impacts less than the following amounts:

Pollutant	Averaging time	Class I area	Class II area	Class III area
PM2.5	Annual	0.06 $\mu g/m^3$	0.3 $\mu g/m^3$	0.3 $\mu g/m^3$
	24-hour	0.07 $\mu g/m^3$	1.2 $\mu g/m^3$	1.2 $\mu g/m^3$

Effective: 05/29/2014

Five Year Review (FYR) Dates: 01/10/2014 and 05/29/2019

CERTIFIED ELECTRONICALLY
Certification

05/19/2014
Date

Promulgated Under: 119.03
Statutory Authority: 3704.03(F)
Rule Amplifies: 3704.03(A), 3704.03(F)
Prior Effective Dates: 4/12/96, 12/1/06

3745-31-17 **Attainment provisions - additional impact analysis.**

[Comment: For dates and availability of non-regulatory government publications, publications of recognized organizations and associations, federal rules, and federal statutory provisions referenced in this rule, see paragraph (LLLLLL) of rule 3745-31-01 of the Administrative Code titled, "referenced materials."]

(A) Applicability.

This rule applies to any major stationary source or major modification that is to be constructed in an area designated in 40 CFR 81.336 as attainment for an air pollutant for which the major stationary source or major modification is major.

(B) Any owner or operator of a proposed major stationary source or major modification shall provide an analysis of the impairment to visibility, soils and vegetation that would occur as a result of the stationary source or modification and general commercial, residential, industrial and other growth associated with the stationary source or modification. This analysis shall be submitted with the permit-to-install application.

(C) The owner or operator shall provide an analysis of the air quality impact projected for the attainment area as a result of general commercial, residential, industrial and other growth associated with the stationary source or modification.

Effective: 05/29/2014

Five Year Review (FYR) Dates: 01/10/2014 and 05/29/2019

CERTIFIED ELECTRONICALLY
Certification

05/19/2014
Date

Promulgated Under: 119.03
Statutory Authority: 3704.03(F)
Rule Amplifies: 3704.03(A), 3704.03(F)
Prior Effective Dates: 4/12/96, 12/1/06

3745-31-18 **Attainment provisions - air quality models.**

[Comment: For dates and availability of non-regulatory government publications, publications of recognized organizations and associations, federal rules, and federal statutory provisions referenced in this rule, see paragraph (LLLLLL) of rule 3745-31-01 of the Administrative Code titled, "referenced materials."]

(A) Applicability.

This rule applies to any major stationary source or major modification that is to be constructed in an area designated in 40 CFR 81.336 as attainment for an air pollutant for which the major stationary source or major modification is major.

(B) All estimates of ambient concentrations required under rule 3745-31-10 of the Administrative Code through rule 3745-31-27 of the Administrative Code shall be based upon the applicable air quality models, databases and other requirements specified in 40 CFR Part 51, Appendix W, "Guideline on Air Quality Models."

(C) Where an air quality impact model specified in 40 CFR Part 51, Appendix W, "Guideline on Air Quality Models," is inappropriate, the model may be changed or another model substituted. Such a change or substitution of a model may be made on a case-by-case basis or, where appropriate, on a generic basis for a specific State program. Written approval of the administrator of the United States environmental protection agency must be obtained for any change or substitution. In addition, use of a changed or substituted model must be subject to notice and opportunity for public comment under procedures developed in accordance with Chapter 3745-49 of the Administrative Code.

Effective: 05/29/2014

Five Year Review (FYR) Dates: 01/10/2014 and 05/29/2019

CERTIFIED ELECTRONICALLY
Certification

05/19/2014
Date

Promulgated Under: 119.03
Statutory Authority: 3704.03(F)
Rule Amplifies: 3704.03(A), 3704.03(F)
Prior Effective Dates: 4/12/96, 12/1/06

3745-31-19 **Attainment provisions - notice to the United States environmental protection agency.**

[Comment: For dates and availability of non-regulatory government publications, publications of recognized organizations and associations, federal rules, and federal statutory provisions referenced in this rule, see paragraph (LLLLLL) of rule 3745-31-01 of the Administrative Code titled, "referenced materials."]

(A) Applicability.

This rule applies to any major stationary source or major modification that is to be constructed in an area designated in 40 CFR 81.336 as attainment for an air pollutant for which the major stationary source or major modification is major.

(B) Notice to the United States environmental protection agency.

The director shall, upon request, transmit to the regional administrator of the United States environmental protection agency a copy of each permit application relating to a major stationary source or major modification subject to this rule and provide notice to the administrator of every action related to the consideration of such permit.

(C) Denial-impact on air quality-related values.

The director shall consider comments from a federal land manager concerning the impact of a proposed major stationary source or major modification on such lands, including a demonstration that the emissions from the proposed major stationary source or major modification would have an adverse impact on the air quality, including visibility, of any federal mandatory Class I lands, notwithstanding that the change in air quality resulting from emissions from such major stationary source or major modification would not cause or contribute to concentrations that would exceed the maximum allowable increases for a Class I area. If the director concurs with such demonstration, the permit shall not be issued.

(D) Class I variances.

The owner or operator of a proposed major stationary source or major modification shall demonstrate to the federal land manager that the emissions from such major stationary source or major modification would have no adverse impact on the air quality of such lands, including visibility, notwithstanding that the change in air quality resulting from emissions from such major stationary source or major modification would cause or contribute to concentrations that would exceed the maximum allowable increases for a Class I area. If the federal land manager concurs with such demonstration and so certifies to the state, the director may, provided that applicable requirements are otherwise met, issue the permit with emission limitations necessary to assure that emissions of sulfur dioxide and particulate matter would not exceed the maximum allowable

increases over baseline concentration for such air pollutant as detailed in the following table:

Air pollutant	Maximum allowable increase (micrograms per cubic meter)
PM2.5	
annual arithmetic mean	4
twenty-four-hour maximum	9
PM10	
annual arithmetric mean	17
twenty-four-hour maximum	30
Sulfur dioxide	
annual arithmetic mean	20
twenty-four-hour maximum	91
three-hour maximum	325
Nitrogen dioxide	
arithmetic mean	25

(E) Sulfur dioxide variance by governor with federal land manager's concurrence.

(1) The owner or operator of a proposed major stationary source or major modification that cannot be approved under procedures developed pursuant to paragraph (D) of this rule may demonstrate to the governor that the major stationary source or major modification cannot be approved by reason of any maximum allowable increase for sulfur dioxide for periods of twenty-four hours or less applicable to any Class I area and, in the case of federal mandatory Class I areas, that a variance under this clause would not adversely affect the air quality of the area, including visibility.

(2) The governor, after consideration of the federal land manager's recommendation, if any, and subject to his concurrence may grant, after notice and an opportunity for a public hearing, a variance from such maximum allowable increase; and

(3) If such variance is granted, the director may issue a permit to such major stationary source or major modification in accordance with provisions developed pursuant to paragraph (G) of this rule provided that the applicable requirements of this chapter are otherwise met.

(F) Variance by the governor with the president's concurrence.

(1) The recommendations of the governor and the federal land manager shall be transferred to the president of the United States in any case where the governor recommends a variance in which the federal land manager does not concur;

(2) The president may approve the governor's recommendation if the president finds that such variance is in the national interest; and

(3) If such variance is approved, the director may issue a permit to such major stationary source or major modification in accordance with provisions developed pursuant to paragraph (G) of this rule provided that the applicable requirements of this chapter are otherwise met.

(G) Emissions limitations for presidential or gubernatorial variance.

In the case of a permit issued under procedures developed pursuant to paragraph (E) or (F) of this rule, the stationary source or modification shall comply with emission limitations as may be necessary to assure that emissions of sulfur dioxide from the stationary source or modification would not, during any day on which the otherwise applicable maximum allow increases are exceeded, cause or contribute to concentrations that would exceed the maximum allowable increases over the baseline concentration, as defined in the following table, and to assure that such emissions would not cause or contribute to concentrations that exceed the otherwise applicable maximum allowable increases for periods of exposure of twenty-four hours or less for more than eighteen days, not necessarily consecutive, during any annual period:

	Maximum Allowable Sulfur Dioxide Increase (Micrograms per Cubic Meter)	
Period of Exposure	Low Terrain	High Terrain
twenty-four-hour maximum	36	62
three-hour maximum	130	221

Effective: 05/29/2014

Five Year Review (FYR) Dates: 01/10/2014 and 05/29/2019

CERTIFIED ELECTRONICALLY
Certification

05/19/2014
Date

Promulgated Under: 119.03
Statutory Authority: 3704.03(F)
Rule Amplifies: 3704.03(A), 3704.03(F)
Prior Effective Dates: 4/12/96, 12/1/06

3745-31-20 **Attainment provisions - innovative control technology.**

[Comment: For dates and availability of non-regulatory government publications, publications of recognized organizations and associations, federal rules, and federal statutory provisions referenced in this rule, see paragraph (LLLLLL) of rule 3745-31-01 of the Administrative Code titled, "referenced materials."]

(A) Authority to request approval.

An owner or operator of a proposed major stationary source or major modification that is to be constructed in an area designated in 40 CFR 81.336 as attainment for an air pollutant for which the major stationary source or major modification is major may request the director of the Ohio environmental protection agency to approve a system of innovative control technology.

(B) Limitations on approval.

The director of the Ohio environmental protection agency, with the written consent of the governor(s) of other state(s) whose air quality may be affected by emissions from the major stationary source or major modification, may determine that the major stationary source or major modification may employ a system of innovative control technology if:

(1) The proposed control system would not cause or contribute to an unreasonable risk to public health, welfare or safety in its operation or function.

(2) The owner or operator agrees to achieve a level of continuous emission reduction equivalent to BACT by a date specified by the director. Such date shall not be later than four years from the time of start-up or seven years from permit issuance.

(3) The major stationary source or major modification would meet the requirements equivalent to those in rule 3745-31-05 of the Administrative Code and paragraph (A) of rule 3745-31-07 of the Administrative Code based on the emission rate that the major stationary source employing the system of innovative control technology would be required to meet on the date specified by the director.

(4) The major stationary source or major modification would not, before the date specified by the director do any of the following:

(a) Cause or contribute to any violation of any applicable national ambient air quality standard.

(b) Impact any Class I area.

(c) Impact any area where an applicable increment is known to be violated.

(5) All other applicable requirements including those for public participation under rule 3745-31-06 of the Administrative Code have been met.

(C) Withdrawal of approval.

The director shall withdraw any approval to employ a system of innovative control technology made under this rule if either of the following occur:

(1) The proposed system fails by the specified date to achieve the required emission rate.

(2) The director determines that continued operation will cause or contribute to an unreasonable risk to public health, welfare or safety.

(D) Extension of demonstration period.

If a proposed major stationary source or major modification fails to meet the required level of continuous emission reduction within the specified time period, or if the approval is withdrawn in accordance with paragraph (C) of this rule, the director may allow the major stationary source or major modification up to an additional three years to meet the requirement for the application of BACT through use of a demonstrated system of control.

Effective: 05/29/2014

Five Year Review (FYR) Dates: 01/10/2014 and 05/29/2019

CERTIFIED ELECTRONICALLY
Certification

05/19/2014
Date

Promulgated Under: 119.03
Statutory Authority: 3704.03(F)
Rule Amplifies: 3704.03(A), 3704.03(F)
Prior Effective Dates: 4/12/96, 12/1/06, 6/30/08

3745-31-21 **Nonattainment provisions - review of major stationary sources and major modifications - stationary source applicability and exemptions.**

[Comment: For dates and availability of non-regulatory government publications, publications of recognized organizations and associations, federal rules, and federal statutory provisions referenced in this rule, see paragraph (LLLLLL) of rule 3745-31-01 of the Administrative Code entitled, "referenced materials."]

(A) Start construction limitation.

No owner or operator of a major stationary source or major modification located in a nonattainment area shall begin actual construction of such major stationary source or major modification unless, as a minimum, rules 3745-31-21 to 3745-31-27 of the Administrative Code have been met and the owner or operator of the stationary source has obtained a valid Ohio environmental protection agency permit-to-install.

(B) Air pollutants covered.

Rules 3745-31-21 to 3745-31-27 of the Administrative Code shall apply to any major stationary source and any major modification with respect to each regulated NSR pollutant that the stationary source would emit, except as this rule would otherwise allow.

(C) Attainment/nonattainment applicability.

Except as provided in rules 3745-31-21 and 3745-31-23 of the Administrative Code, rules 3745-31-21 to 3745-31-27 of the Administrative Code apply only to any major stationary source or major modification that would be constructed in an area designated under 40 CFR 81.336 as nonattainment for an air pollutant for which the stationary source or modification is major.

(D) PM10 precursors.

Major stationary sources and major modifications of PM10 precursors shall be subject to the control requirements that are applicable under plans in effect under Section 189 of the Clean Air Act for major stationary sources and major modifications of PM10, except where the director determines that such major stationary sources do not contribute significantly to PM10 levels that exceed the PM10 standard in the area.

(E) Clean coal technology.

Consistent with the Clean Air Act, Ohio environmental protection agency shall apply the following requirements for clean coal technology demonstrations:

(1) Applicability.

This paragraph applies to physical or operation changes to existing facilities for the sole purpose of installation, operation, cessation, or removal of a temporary or permanent clean coal technology demonstration project.

(2) Temporary clean coal technology demonstration projects.

Installation, operation, cessation, or removal of a temporary clean coal technology demonstration project shall not subject such demonstration project to the requirements of Section 111 or Part D of Title I of the Clean Air Act.

(3) Permanent clean coal technology demonstration projects.

For permanent clean coal technology demonstration projects that constitute repowering, as defined in Section 402(12) of Title IV, (acid deposition control) of the Clean Air Act, any qualifying clean coal technology demonstration project shall not be subject to standards of performance under Section 111 of the Clean Air Act or to the review and permitting requirements of Part C of Title I of the Clean Air Act for any air pollutant the potential emissions of which will not increase as a result of the clean coal technology demonstration project.

(4) Exemption for reactivation of very clean coal technology units.

Physical changes or changes in the method of operation associated with the commencement of commercial operations by a coal-fired utility unit after a period of discontinued operation shall not subject the emissions unit to the requirements of Section 111 or Part C of Title I of the Clean Air Act where the emissions unit:

(a) Has not been in operation for the two-year period prior to the enactment of the Clean Air Act Amendments of 1990, and the emissions from such emissions unit continue to be carried in the director's emission inventory at the time of enactment.

(b) Was equipped prior to shut-down with a continuous system of emission control that achieves a removal efficiency for sulfur dioxide of no less than eighty-five per cent and a removal efficiency for particulate matter of no less than ninety-eight per cent.

(c) Is equipped with low-NO_x burners prior to the time of commencement.

(d) Is otherwise in compliance with the requirements of the Clean Air Act.

(F) Secondary emissions.

If a major stationary source is subject to this rule on the basis of the direct emissions from the major stationary source, the applicable conditions of this rule shall also be met for secondary emissions. However, secondary emissions may be exempt from LAER requirements and compliance certification requirements

under paragraphs (A)(1) and (A)(2) of rule 3745-31-22 of the Administrative Code. Consideration of the indirect impacts of motor vehicles and aircraft traffic regulated under Title II of the Clean Air Act (motor vehicles and aircraft) is not required under this rule.

Effective: 05/29/2014

Five Year Review (FYR) Dates: 01/10/2014 and 05/29/2019

CERTIFIED ELECTRONICALLY
Certification

05/19/2014
Date

Promulgated Under: 119.03
Statutory Authority: 3704.03(F)
Rule Amplifies: 3704.03(A), 3704.03(F)
Prior Effective Dates: 4/12/96, 4/27/98, 10/28/04, 12/1/06

3745-31-22 **Nonattainment provisions - conditions for approval.**

[Comment: For dates and availability of non-regulatory government publications, publications of recognized organizations and associations, federal rules, and federal statutory provisions referenced in this rule, see paragraph (LLLLLL) of rule 3745-31-01 of the Administrative Code entitled, "referenced materials."]

(A) Conditions for permit-to-install approval.

If the director finds that a major stationary source or major modification for which a permit-to-install application has been submitted would be constructed in an area designated in 40 CFR 81.336 as nonattainment for an air pollutant for which the major stationary source or major modification is major, approval may be granted only if the following conditions are met:

(1) Lowest achievable emission rate (LAER).

The major stationary source or major modification is required to meet an emission limitation that specifies the LAER for such stationary source.

If the director determines that technological or economic limitations on the application of measurement methodology to a particular class of stationary sources would make the imposition of an enforceable numerical emission standard infeasible, the director may instead prescribe a design, operational, or equipment standard. Any permits issued without an enforceable numerical emission standard must contain enforceable conditions which assure that the design characteristics or equipment will be properly maintained, or that the operational conditions will be properly performed, so as to continuously achieve the assumed degree of control.

The LAER is required only for those major nonattainment air pollutants for which the increased allowable emissions exceed the significant emission rates, although the director may choose to require LAER for air pollutants that do not exceed these values.

The new emission limitations for the new stationary source as well as any existing stationary sources affected must be federally enforceable.

(2) Compliance certification.

The applicant shall certify that all existing major stationary sources owned or operated by the applicant, or any entity controlling, controlled by, or under common control with the applicant, in Ohio as the proposed major stationary source or major modification are in compliance with all applicable emission limitations and standards under the Clean Air Act, or are in compliance with an expeditious schedule which is federally enforceable or contained in a court decree.

(3) Emission offsets.

(a) Emission reductions (offsets) from existing air contaminant sources in the area of the proposed major stationary source, whether or not under the same ownership, are required such that there will be reasonable progress, as determined by the director, toward attainment of the applicable national ambient air quality standard.

(b) Only intra air pollutant emission offsets will be acceptable (e.g., hydrocarbon increases may not be offset against sulfur dioxide reductions) except interprecursor offsetting is permitted for PM2.5 emissions in accordance with paragraph (D) of rule 3745-31-26 of the Administrative Code.

(c) Emission offsets must meet the baseline limitations of rule 3745-31-24 of the Administrative Code, the location limitations of rule 3745-31-25 of the Administrative Code, and the offset ratio limitations of rule 3745-31-26 of the Administrative Code.

(d) Emission offsets are required only for those air pollutants for which the increased allowable emissions exceed the significant emission rates.

(e) The total tonnage of increased emissions, in tons per year, resulting from a major modification that must be offset in accordance with Section 173 of the Clean Air Act shall be determined by summing the difference between the allowable emissions after the major modification and the actual emissions before the modification for each emissions unit.

(4) Net air quality benefit.

The emission offsets must provide a positive net air quality benefit in the affected area pursuant to rule 3745-31-25 of the Administrative Code. Atmospheric dispersion modeling is not necessary for VOCs and nitrogen oxides in ozone nonattainment areas. Instead, complying with the requirements of paragraphs (A)(1) to (A)(3) of this rule and rule 3745-31-25 of the Administrative Code will be considered adequate to meet this condition.

(5) Reasonable further progress.

Permits-to-install may be issued if the director determines that, by the time the source is to commence operation, sufficient offsetting emissions reductions have been obtained, such that total allowable emissions from existing sources in the applicable nonattainment areas, from new or modified sources which are not major emitting facilities, and from the proposed source will be sufficiently less than total emissions from existing sources prior to the application for such permit to construct or modify so as to represent reasonable further progress as defined in Section 171 of the Clean Air Act.

(B) Exemptions from certain conditions.

(1) Fuel switch exemption.

The director may exempt the following major stationary sources or major modifications from the limitation required under paragraph (D)(1) of rule 3745-31-23 of the Administrative Code or the emission offsets required under paragraphs (A)(3) and (A)(4) of this rule:

Major stationary sources that must switch fuels due to lack of adequate fuel supplies or where a major stationary source is required to be modified as a result of new United States environmental protection agency regulations and no exemption from such regulation is available to the major stationary source.

Such exemptions may be granted only if the following applies:

(a) The applicant demonstrates that it made its best efforts to obtain sufficient emission offsets and that such efforts were unsuccessful;

(b) The applicant has secured all available emission offsets; and

(c) The applicant will continue to seek the necessary emission offsets and apply them when they become available.

(2) Temporary stationary sources/portable facilities/construction emissions:

The director may exempt the following major stationary sources or major modifications from the emission offsets required under paragraphs (A)(3) and (A)(4) of this rule:

(a) Portable facilities that will be relocated outside of the nonattainment area after a short period of time.

(b) Emissions generated from the construction phase of a new major stationary source.

Effective: 05/29/2014

Five Year Review (FYR) Dates: 01/10/2014 and 05/29/2019

CERTIFIED ELECTRONICALLY
Certification

05/19/2014
Date

Promulgated Under: 119.03
Statutory Authority: 3704.03(F)
Rule Amplifies: 3704.03(A), 3704.03(F)
Prior Effective Dates: 4/12/96, 10/28/04, 12/1/06, 6/30/08

3745-31-23 **Nonattainment provisions - stationary sources locating in designated clean or unclassifiable areas which would cause or contribute to a violation of a national ambient air quality standard.**

[Comment: For dates and availability of non-regulatory government publications, publications of recognized organizations and associations, federal rules, and federal statutory provisions referenced in this rule, see paragraph (LLLLLL) of rule 3745-31-01 of the Administrative Code entitled, "referenced materials."]

(A) Applicability.

This rule applies only to major stationary sources or major modification that will be located in an area designated in 40 CFR 81.336 as attainment or unclassifiable if the emissions from the major stationary source or major modification would exceed the following significance levels at any locality that does not meet the national ambient air quality standard:

		Averaging Time (Hours)			
Air Pollutant	Annual	24	8	3	1
Sulfur dioxide	1.0µg/m^3	5.0µg/m^3	--------	25µg/m^3	--------
PM10	1.0µg/m^3	5.0µg/m^3	--------	--------	--------
PM2.5	0.3µg/m^3	1.2µg/m^3	--------	--------	--------
Nitrogen dioxide	1.0µg/m^3	--------	--------	--------	10µg/m3
Carbon monoxide	--------	--------	500µg/m^3	--------	2mg/m^3

(B) Requirements and exemptions.

Major stationary sources or major modifications to which this section applies shall meet the LAER under paragraph (A)(1) of rule 3745-31-22 of the Administrative Code, the compliance certification under paragraph (A)(2) of rule 3745-31-22 of the Administrative Code, and the net air quality benefit under paragraph (A)(4) of rule 3745-31-22 of the Administrative Code. However, such major stationary sources or major modifications are exempt from the offset requirements under paragraph (A)(3) of rule 3745-31-22 of the Administrative Code.

(C) Review of specified major stationary sources for air quality impact.

(1) For sulfur dioxide, particulate matter, PM10, PM2.5 and carbon monoxide, the determination of whether a major stationary source or major modification will cause or contribute to a violation of a national ambient air quality standard is be made on a case-by-case basis using the major stationary source's allowable emissions in an atmospheric dispersion model.

(2) For major stationary sources of nitrogen oxides, the initial determination of whether a major stationary source would cause or contribute to a violation of the national ambient air quality standard for nitrogen dioxide will be made using an atmospheric model assuming all the nitric oxide emitted is oxidized to nitrogen dioxide by the time the plume reaches ground level. The initial concentration estimates may be adjusted if adequate data are available to account for the expected oxidation rate.

(3) For ozone, major stationary sources of VOCs, locating outside a designated ozone nonattainment area, will be presumed to have no significant impact on the designated nonattainment area. If ambient monitoring indicates that the area of major stationary source location is in fact nonattainment, then the major stationary source may be permitted under the provisions of the Ohio state implementation plan adopted pursuant to Section 110(A)(2)(d) of the Clean Air Act until the area is designated nonattainment and the Ohio state implementation plan revision is approved. If no Ohio state implementation plan pursuant to Section 110(A)(2)(d) of the Clean Air Act has been adopted and approved, then this rule shall apply.

(4) The determination as to whether a major stationary source would cause or contribute to a violation of a national ambient air quality standard should be made as of the new stationary source's start-up date. Therefore, if a designated nonattaiment area is projected to be an attainment area as part of an approved Ohio state implementation plan control strategy by the new stationary source start-up date, offsets will not be required if the new stationary source would not cause a new violation.

(D) Major stationary sources located in clean air areas.

If the director finds that the emissions from a proposed major stationary source would cause a new violation of a national ambient air quality standards, but would not contribute to an existing violation, approval may be granted only if both of the following conditions are met:

(1)

(a) The major stationary source is required to meet a more stringent emission limitation and/or the control of existing stationary sources below allowable levels is required so that the major stationary source will not cause a violation of any national ambient air quality standard.

(b) If the director determines that technological or economic limitations on the application of measurement methodology to a particular class of major stationary sources would make the imposition of an enforceable numerical emission standard infeasible, the director may instead prescribe a design, operational, or equipment standard. Any permits issued without an enforceable numerical emission standard must contain enforceable conditions which assure that the design characteristics or

equipment will be properly maintained (or that the operational conditions will be properly performed) so as to continuously achieve the assumed degree of control. Such conditions shall be enforceable as emission limitations by private parties under Section 304 of the Clean Air Act. Thereafter, the term emission limitation shall also include such design, operational, or equipment standards.

(2) The new emission limitations for the major stationary source as well as any existing stationary sources affected must be federally enforceable.

Effective: 05/29/2014

Five Year Review (FYR) Dates: 01/10/2014 and 05/29/2019

CERTIFIED ELECTRONICALLY
Certification

05/19/2014
Date

Promulgated Under: 119.03
Statutory Authority: 3704.03(F)
Rule Amplifies: 3704.03(A), 3704.03(F)
Prior Effective Dates: 4/12/96, 12/1/06

3745-31-24 **Nonattainment provisions - baseline for determining credit for emission and air quality offsets.**

[Comment: For dates and availability of non-regulatory government publications, publications of recognized organizations and associations, federal rules, and federal statutory provisions referenced in this rule, see paragraph (LLLLLL) of rule 3745-31-01 of the Administrative Code entitled, "referenced materials."]

(A) Applicability.

This rule applies to any major stationary source or major modification that is to be constructed in an area designated in 40 CFR 81.336 as nonattainment for an air pollutant for which the major stationary source or major modification is major.

(B) Baseline for determining credit for emission offsets.

(1) The baseline for determining credit for emission offsets shall be the emission limit under the Ohio state implementation plan in effect at the time the application to construct or modify a source is filed. Thus, credit for emission offset purposes may be allowed for existing control that goes beyond that required by the Ohio state implementation plan. Where the Ohio state implementation plan does not contain an emission limitation for that source or source category, the emission offset baseline involving such sources shall be the actual emissions determined in accordance with the following:

(a) The baseline emissions for existing sources providing the offsets shall be calculated using the actual emissions definition specified in rule 3745-31-01 of the Administrative Code. The director shall allow a pounds per hour averaging period for determining emission offsets when a tons per year averaging period results in a significant over- or underestimation of emission offset credits.

(b) Where the emission limits under the Ohio state implementation plan allow greater emissions than the potential to emit of the source, emission offset credit will be allowed only for control below this potential.

(2) The demonstration of reasonable further progress and attainment of ambient air quality standards is based upon the actual emissions of sources located within a designated nonattainment area for which the preconstruction review program was adopted.

(C) Old growth cushion.

Only those emissions that have been set aside for new source growth in the most recent Ohio state implementation plan can be used by a major stationary source or major modification to offset emissions. Emissions reserved for new source

growth in past Ohio state implementation plans cannot be used by a major stationary source or major modification to offset emissions.

(D) Combustion of fuels.

Generally, the emissions for determining emission offset credit involving an existing fuel combustion stationary source will be the allowable emissions under the Ohio state implementation plan for the type of fuel being burned at the time the major stationary source application is filed (i.e., if the existing owner or operator of the stationary source has switched to a different type of fuel at some earlier date, any resulting emission reduction [either actual or allowable] shall not be used for emission offset credit). If the owner or operator of the existing stationary source commits to switch to a cleaner fuel at some future date, emission offset credit based on the allowable emissions for the fuel involved is not acceptable unless the permit is conditioned to require the use of specific alternative control measures that would achieve the same degree of emission reductions should the stationary source be switched back to a dirtier fuel at some later date. The applicant must provide information to the director that documents that adequate long-term supplies of the new fuel are available.

(E) Rocket engines or motors.

The director shall allow the owner or operator of a major stationary source to offset by alternative or innovative means emission increases from rocket engine and motor firing, and cleaning related to such firing, at an existing or modified major stationary source that tests rocket engines or motors under the following conditions:

(1) Any major modification proposed is solely for the purpose of expanding the testing of rocket engines or motors at an existing stationary source that is permitted to test such engines on November 15, 1990.

(2) The applicant demonstrates to the satisfaction of the director that it has used all reasonable means to obtain and utilize offsets, as determined on an annual basis, for the emission increases beyond allowable levels, that all available offsets are being used, and that sufficient offsets are not available to the major stationary source.

(3) The applicant has obtained a written finding from the United States department of defense, United States department of transportation, national aeronautics and space administration or other appropriate federal agency, that the testing of rocket motors or engines at the major stationary source is required for a program essential to the national security.

(4) The major stationary source will be in compliance with an alternative measure, imposed by the director, designed to offset any emission increases beyond permitted levels not directly offset by the stationary source.

(F) Operating hours and stationary source shutdown.

(1) The owner or operator of a stationary source may be credited with emission reductions achieved by shutting down an existing stationary source or permanently curtailing production or operating hours below baseline levels if the following requirements are met:

(a) Such reductions are surplus, permanent, quantifiable, and federally enforceable or legally and practicably enforceable by the state.

(b) The shutdown or curtailment occurred after the last day of the base year used for the Ohio state implementation planning process. For purposes of this paragraph, the director may choose to consider a prior shutdown or curtailment to have occurred after the last day of the base year if the projected emissions inventory used to develop the most recent attainment demonstration explicitly includes the emissions from such previously shutdown or curtailed emission units. However, in no event may credit be given for shutdowns that occurred before August 7, 1977.

(2) Emission reductions that do not meet the requirements of paragraph (F)(1) of this rule may be credited if the shutdown or curtailment occurred on or after the date the major stationary source application is filed, or, if the applicant can establish that the proposed major stationary source is a replacement for the shutdown or curtailed stationary source and the cutoff date provisions of paragraph (F)(1)(b) of this rule are observed.

(G) Credit for volatile organic compound (VOC) substitution.

No emission offset credit may be allowed for replacing one VOC with another of lesser reactivity, except for those compounds listed in Table 1 of the United States environmental protection agency's "Recommended Policy on Control of Volatile Organic Compounds".

(H) Banking of emission offset credit.

For owners or operators of major stationary sources obtaining permits by applying offsets after January 16, 1979, the director may allow offsets that exceed the requirements of reasonable progress toward attainment to be banked (i.e., saved to provide offsets for a major stationary source seeking a permit in the future) for use under this rule. Likewise, the director may allow the owner of an existing stationary source that reduces its own emissions to bank any resulting reductions beyond those required by the Ohio state implementation plan for use under this ruling, even if none of the offsets are applied immediately to a new major stationary source permit. The director may allow these banked offsets to be used under the preconstruction review program; as long as these banked emissions are consistent with the Ohio state implementation plan control strategy. The director may not approve the construction of a major stationary source using banked offsets if the new major stationary source would interfere with the Ohio state implementation plan control strategy or if such use would violate any other condition set forth for use of offsets.

(I) Offset credit for meeting new source performance standards or national emission standards for hazardous air pollutants.

Where a stationary source is subject to an emission limitation established in a new source performance standard or a national emission standard for hazardous air pollutants, (i.e., requirements under Sections 111 and 112, respectively, of the Clean Air Act), and a different Ohio State implementation plan limitation, the more stringent limitation shall be used as a baseline for determining credit for emission offsets. The difference in emissions between the Ohio state implementation plan and the new source performance standards or national emission standards for hazardous air pollutant standards, for such stationary source may not be used as offset credit.

(J) All emission reductions claimed as offset credit shall be federally enforceable.

Effective: 05/29/2014

Five Year Review (FYR) Dates: 01/10/2014 and 05/29/2019

CERTIFIED ELECTRONICALLY
Certification

05/19/2014
Date

Promulgated Under: 119.03
Statutory Authority: 3704.03(F)
Rule Amplifies: 3704.03(A), 3704.03(F)
Prior Effective Dates: 4/12/96, 10/28/04, 12/1/06

3745-31-25 **Nonattainment provisions - location of offsetting emissions.**

[Comment: For dates and availability of non-regulatory government publications, publications of recognized organizations and associations, federal rules, and federal statutory provisions referenced in this rule, see paragraph (LLLLLL) of rule 3745-31-01 of the Administrative Code entitled, "referenced materials."]

(A) Applicability.

This rule applies to any major stationary source or major modification that is to be constructed in an area designated in 40 CFR 81.336 as nonattainment for an air pollutant for which the major stationary source or major modification is major.

(B) All regulated NSR pollutants as defined under rule 3745-31-01 of the Administrative Code.

The owner or operator shall obtain creditable emission reductions of any regulated NSR pollutant from the same source or other sources in the same nonattainment area, except that the director may allow the owner or operator of a major stationary source to obtain such emission reductions in another nonattainment area if the following requirements are met:

(1) The other nonattainment area has an equal or higher nonattainment classification, provided that the higher offset ratio is utilized, than the nonattainment area in which the major stationary source is located, and;

(2) Emissions from such other nonattainment area contribute to a violation of the national ambient air quality standard in the nonattainment area in which the major stationary source is located.

(C) Sulfur dioxide, particulate matter, PM10, PM 2.5, lead and carbon monoxide.

Since the air quality impact of sulfur dioxide, particulate matter, PM10, PM 2.5, lead and carbon monoxide is site dependent, simple area wide mass emission offsets may not be appropriate. For these air pollutants, the director may require atmospheric dispersion modeling to ensure that the emission offsets provide a positive net air quality benefit. This modeling shall be conducted in accordance with the director's guidance.

Replaces: 3745-31-25

Effective: 05/29/2014

Five Year Review (FYR) Dates: 05/29/2019

CERTIFIED ELECTRONICALLY
Certification

05/19/2014
Date

Promulgated Under: 119.03
Statutory Authority: 3704.03(F)
Rule Amplifies: 3704.03(A), 3704.03(F)
Prior Effective Dates: 4/12/96, 12/1/06

3745-31-26 **Nonattainment provisions - offset ratio requirements.**

[Comment: For dates and availability of non-regulatory government publications, publications of recognized organizations and associations, federal rules, and federal statutory provisions referenced in this rule, see paragraph (LLLLLL) of rule 3745-31-01 of the Administrative Code entitled, "referenced materials."]

(A) In meeting the emissions offset in rules 3745-31-21 to 3745-31-27 of the Administrative Code, the following shall occur:

(1) The ratio of total actual emissions reductions to the emissions increase shall be at least 1.0 to 1.0 unless an alternative ratio is provided for the applicable nonattainment area in paragraphs (C) and (D) of this rule.

(2) The emissions offsets obtained shall be for the same regulated NSR pollutant except for interprecursor offsetting permitted under paragraph (D) of this rule.

(B) Offsets may be obtained from areas that have a higher nonattainment classification, provided the higher offset ratio is utilized, than the nonattainment area in which the major stationary source is to be located.

(C) Ozone nonattainment area offset requirements for VOC and nitrogen oxides are as follows:

(1) In areas that are not classified as marginal, moderate, serious, severe or extreme areas, the offset ratio shall be greater than 1.0 to 1.0.

(2) Marginal areas, the minimum required offset ratio is 1.1 to 1.0.

(3) Moderate areas, the minimum required offset ratio is 1.15 to 1.0.

(4) Serious areas, the minimum required offset ratio is 1.2 to 1.0.

(5) Severe areas, the minimum required offset ratio is 1.3 to 1.0.

(6) Extreme areas, the minimum required offset ratio is 1.5 to 1.0.

(D) PM2.5 nonattainment area interprecursor offset ratios are as follows:

(1) Sulfur dioxide and PM2.5 offset ratios:

(a) When using sulfur dioxide emission reductions for PM2.5 emission increases, the minimum required offset ratio is 40.0 to 1.0.

(b) When using PM2.5 emission reductions for sulfur dioxide emission increases, the minimum required offset ratio is 1.0 to 40.0.

(2) Nitrogen oxides and PM2.5 offset ratios:

(a) When using nitrogen oxides emission reductions for PM2.5 emission increases, the minimum required offset ratio is 200.0 to 1.0.

(b) When using PM2.5 emission reductions for nitrogen oxide emission increases, the minimum required offset ratio is 1.0 to 200.0.

(E) Nitrogen oxides waiver.

Paragraph (A) of this rule shall not apply in areas designated nonattainment for ozone that have been granted a nitrogen oxide waiver under Section 182(f) of the Clean Air Act.

Replaces: 3745-31-26

Effective: 05/29/2014

Five Year Review (FYR) Dates: 05/29/2019

CERTIFIED ELECTRONICALLY
Certification

05/19/2014
Date

Promulgated Under: 119.03
Statutory Authority: 3704.03(F)
Rule Amplifies: 3704.03(A), 3704.03(F)
Prior Effective Dates: 4/12/96, 10/28/04, 12/1/06

3745-31-27 **Nonattainment provisions - administrative procedures for emission offsets.**

[Comment: For dates and availability of non-regulatory government publications, publications of recognized organizations and associations, federal rules, and federal statutory provisions referenced in this rule, see paragraph (LLLLLL) of rule 3745-31-01 of the Administrative Code entitled, "referenced materials."]

(A) Procedures for emission offsets.

Emission offsets may be proposed by either the owner or operator of the proposed major stationary source or by the local community or the state. The emission reduction committed to must be enforceable by authorized state or local agencies and under the Clean Air Act, and must be accomplished by the new major stationary source's start-up date. If emission reductions are to be obtained in a state that neighbors the state in which the new major stationary source is to be located, the emission reductions committed to must be enforceable by the neighboring state and/or local agencies and under the Clean Air Act. Where the new major stationary source is a replacement for a major stationary source that is being shut down in order to provide the necessary offsets, the director may allow up to one hundred eighty days for shakedown of the new major stationary source before the existing major stationary source is required to cease operation.

(1) Major stationary source initiated emission offsets.

The owner or operator of a major stationary source may propose emission offsets that involve the following:

(a) Reductions from stationary sources controlled by the major stationary source owner or operator (internal emission offsets).

(b) Reductions from neighboring stationary sources (external emission offsets). The owner or operator of the major stationary source does not have to investigate all possible emission offsets. As long as the emission offsets obtained represent reasonable progress toward attainment (in the director's judgement), they will be acceptable to the director. The director shall review and approve the emission offsets to assure that the emission offsets will be as effective as proposed by the owner or operator of the major stationary source. An internal emission offset will be considered enforceable if it is made an Ohio state implementation plan requirement by inclusion as a condition of the new major stationary source permit and the permit is forwarded to the United States environmental protection agency. An external emission offset will not be enforceable unless the affected stationary source providing the emission reductions is subject to a new Ohio state implementation plan requirement or federally enforceable permit condition or a permit

condition legally and practicably enforceable by the state to ensure that its emissions will be reduced by a specified amount in a specified time.

(2) State or community initiated offsets. A state or community may generate emission offsets to provide to a major stationary source wishing to locate in its area. These emission offsets may come from reducing emissions from existing emissions units, mobile sources or area sources. State or community initiated offsets either must be submitted as a Ohio state implementation plan revision or must be contained in a federally enforceable permit.

Effective: 05/29/2014

Five Year Review (FYR) Dates: 01/10/2014 and 05/29/2019

CERTIFIED ELECTRONICALLY
Certification

05/19/2014
Date

Promulgated Under: 119.03
Statutory Authority: 3704.03(F)
Rule Amplifies: 3704.03(A), 3704.03(F)
Prior Effective Dates: 4/12/96, 12/1/06

3745-31-28 **Review of major stationary sources of hazardous air pollutants requiring MACT determinations.**

[Comment: For dates and availability of non-regulatory government publications, publications of recognized organizations and associations, federal rules, and federal statutory provisions referenced in this rule, see paragraph (LLLLLL) of rule 3745-31-01 of the Administrative Code entitled, "referenced materials."]

(A) Applicability.

Except as provided in paragraph (C) of this rule, the requirements of this rule apply to the construction or reconstruction of a major MACT source.

(B) Requirements.

On or after June 29, 1998, no person may cause, permit, or allow the beginning of actual construction or reconstruction of any process or production unit that is a major MACT source without first applying for and obtaining a MACT determination from the director unless specifically exempted under paragraph (C) of this rule.

(C) Exemptions.

The following major MACT sources are exempt from the requirements of this rule:

(1) Any major MACT source that has been specifically regulated or exempted from regulation under a federal standard issued pursuant to Section 112(d) or Section 112(h) of the Clean Air Act and incorporated in a subpart of 40 CFR Part 63, or under a determination issued pursuant to Section 112(j) of the Clean Air Act.

(2) Any major MACT source that has received a final permit-to-install before June 29, 1998.

(3) Any major MACT source that is an electric utility steam generating unit, unless and until such time as these units are added to the source category list pursuant to Section 112(c)(5) of the Clean Air Act.

(4) Any major MACT source that is within a source category which has been deleted from the source category list pursuant to Section 112(c)(9) of the Clean Air Act.

(5) Any major MACT source that is a research and development activity.

(D) Data submission.

The permit application for a major MACT source to which this rule applies shall specify a control technology selected by the applicant that, if properly maintained and operated, will satisfy paragraph (E) of this rule.

(1) In each case where a constructed or reconstructed major MACT source would require additional control technology or change in control technology, the application for a MACT determination shall contain the following information:

(a) The name and address (physical location) of the major MACT source to be constructed or reconstructed.

(b) A brief description of the major MACT source to be constructed or reconstructed and identification of any listed source category or source categories from Section 112(c) of the Clean Air Act in which it is included.

(c) The expected commencement date for the construction or reconstruction of the major MACT source.

(d) The expected completion date for the construction or reconstruction of the major MACT source.

(e) The anticipated date of start-up for the constructed or reconstructed major MACT source.

(f) The HAPs to be emitted by the constructed or reconstructed major MACT source, and the estimated emission rate for each such HAP, to the extent that this information is required by the director.

(g) Any federally enforceable emission limitations applicable to the constructed or reconstructed major MACT source.

(h) The maximum and expected utilization of capacity of the constructed or reconstructed major MACT source, and the associated uncontrolled emission rates for that source to the extent this information is needed by the director to determine MACT.

(i) The controlled emissions for the constructed or reconstructed major MACT source, in tons per year, at expected and maximum utilization of capacity to the extent this information is needed by the director to determine MACT.

(j) A recommended emission limitation for the constructed or reconstructed major MACT source consistent with the principles set forth in paragraph (E) of this rule.

(k) Any other relevant information required pursuant to 40 CFR Part 63, Subpart A.

(l) The control technology selected to meet the recommended MACT emission limitation, including technical information on the design, operation, size, and estimated control efficiency of the control technology.

(m) Supporting documentation including identification of alternative control technologies considered by the applicant to meet the emission limitation, and analysis of cost and non-air quality health and environmental impacts or energy requirements for the selected control technology.

(2) In each case where an applicant contends that a constructed or reconstructed major MACT source will be in compliance, upon start-up, with case-by-case MACT without a change in control technology, the application shall contain the following information:

(a) The information described in paragraphs (D)(1)(a) to (D)(1)(j) of this rule.

(b) Documentation of the control technology in place.

(E) Principles of MACT determination.

The following general principles shall govern preparation by the applicant of each permit application requiring a MACT determination, and all subsequent review of and actions taken concerning such an application:

(1) The MACT emission limitation or MACT requirements recommended by the applicant and approved by the director shall not be less stringent than the emission control which is achieved in practice by the best controlled similar source, as determined by the director.

(2) Based upon available information as defined in this rule, the MACT emission limitation and control technology recommended by the applicant and approved by the director shall achieve the maximum degree of reduction of HAP emissions which can be achieved by utilizing those control technologies identified in the available information, considering the costs of achieving such emission reduction and any non-air quality health and environmental impacts and energy requirements associated with the emission reduction.

(3) The applicant may recommend, and the director may approve, a specific design, equipment, work practice, operational standard, or combination thereof, if the director determines that it is not feasible to prescribe or enforce an emission limitation.

(4) If a federal emission standard has been proposed pursuant to Sections 112(d) or 112(h) of the Clean Air Act, or if the United States environmental protection agency has adopted a presumptive MACT determination for the source category which includes the constructed or reconstructed source, then the MACT requirements applied to the source shall have considered those

emission limitations and requirements of the proposed MACT standard or presumptive MACT determination.

(5) Any permit-to-install containing a MACT determination shall include all monitoring, testing, recordkeeping, and reporting requirements necessary to ensure initial and ongoing compliance of the major MACT source with the MACT determination.

(F) Prohibition.

No person may begin actual construction or reconstruction of a major MACT source until the director has made a MACT determination for that source and included the requirements of that determination in a final and effective permit-to-install.

(G) The effective date of the MACT determination shall be the date of issuance of the permit-to-install.

(H) On and after the date of start-up, a major MACT source which required a case-by-case MACT determination shall be in compliance with all the applicable requirements of the MACT determination as specified in the final permit-to-install.

Effective: 05/29/2014

Five Year Review (FYR) Dates: 01/10/2014 and 05/29/2019

CERTIFIED ELECTRONICALLY
Certification

05/19/2014
Date

Promulgated Under: 119.03
Statutory Authority: 3704.03(F)
Rule Amplifies: 3704.03(A), 3704.03(F)
Prior Effective Dates: 9/25/98, 12/1/06

3745-31-29 **General permit-to-install and general PTIO.**

[Comment: For dates and availability of non-regulatory government publications, publications of recognized organizations and associations, federal rules, and federal statutory provisions referenced in this rule, see paragraph (LLLLLL) of rule 3745-31-01 of the Administrative Code entitled, "referenced materials."]

(A) Development of model general permits.

The director may develop a model general permit for any category of air contaminant sources, or specific portions of any category of air contaminant sources, subject to the following conditions:

(1) A model general permit shall apply to the following:

(a) Processes producing the same or similar products.

(b) Processes emitting the same or similar air contaminants.

(c) Methods for capturing and controlling the air contaminants that are the same or limited to a small number of specific alternatives.

(d) Processes that are subject to the same emission limitations, monitoring requirements, federal standards, or state rules.

(2) A model general permit shall identify criteria by which an air contaminant source may qualify for the associated general permit and shall include terms and conditions under which the owner or operator agrees to install and/or operate the permitted air contaminant source. At a minimum, these terms and conditions shall include the following:

(a) Applicable emission limitations and/or control requirements.

(b) Any necessary operational restrictions.

(c) Any necessary monitoring, reporting and recordkeeping requirements.

(d) Testing requirements.

(3) The director shall provide an opportunity for public comment on the form and content of a model general permit as follows:

(a) The director shall announce availability for comment on draft model general permits under development containing the requirements in paragraph (A)(2) of this rule, providing a minimum of thirty days comment period. The director shall publish notice in Ohio's major newspapers, the Ohio environmental protection agency publication, "Weekly Review," on the Ohio environmental protection agency website, and provide electronic notification to interested parties.

(b) The director shall announce the final form of model general permits that were under development by publishing notice in Ohio's major newspapers, the "Weekly Review," on the Ohio environmental protection agency website, and provide electronic notification to interested parties.

(c) Final model general permits are not actions of the director and are, therefore, not subject to appeal.

(4) Model general permits shall be reviewed at least once every five years from the date of announcement of the final form.

(a) The review of the model general permit shall follow the same procedures for public comment as the draft and final form of the model general permits under development pursuant to paragraph (A)(3) of this rule.

(b) Any person may make a written request for the Ohio environmental protection agency review of the model general permit document prior to the Ohio environmental protection agency initiated review. Upon receipt of the request, the Ohio environmental protection agency will initiate the review procedure described in this rule.

(5) Only the director may modify model general permits. Modifications to model general permits shall follow the same procedures pursuant to paragraph (A)(3) of this rule, except administrative modifications may occur without following the rules of procedure contained within this chapter. Existing final general permits are not affected by changes to the model general permit.

(B) General permit-to-install and general PTIO applicability.

A general permit-to-install or general PTIO may be applied for and obtained if all of the following apply:

(1) All of the qualifications and requirements described in this chapter are met, except as noted in paragraph (C)(2) of this rule.

(2) The air contaminant source meets all of the qualifications listed in the requested model general permit.

(3) The requested air contaminant source are not affected sources under the acid rain program unless otherwise provided in regulations promulgated under Title IV of the Clean Air Act.

(4) The requested air contaminant source is not part of a new major stationary source or major modification subject to the attainment or nonattainment provisions contained in rules 3745-31-10 to 3745-31-27 of the Administrative Code.

(C) General permit application.

(1) Owners or operators of air contaminant sources requesting a general permit-to-install or general PTIO shall do so using the forms prepared by the Ohio environmental protection agency. The application must include all information necessary to determine qualification for, and to assure compliance with, the general permit-to-install or general PTIO.

(2) The application submitted shall comply with the requirements listed under rule 3745-31-04 of the Administrative Code except that the director may provide, in the model general permit-to-install or model general PTIO, for applications that deviate from the requirements of rule 3745-31-04 of the Administrative Code, provided that such application includes all information necessary to determine qualification for, and assure compliance with, the general permit-to-install or general PTIO.

(D) General permit processing.

The director may issue a general permit-to-install or general PTIO for any model general permit developed in accordance with paragraph (A) of this rule for a new air contaminant source or modification of an existing air contaminant source as follows:

(1) The director, at the director's discretion, shall issue either a draft action or a final action within forty-five days of receipt of a complete application. The director does not need to meet the forty-five day deadline for applications from air contaminant sources that do not require authorization to construct because the air contaminant source currently holds a permit covering the source that would be covered under the general permit-to-install or general PTIO.

(2) The director shall comply with the procedures for notification under Chapter 3745-49 of the Administrative Code prior to issuing a general permit-to-install or general PTIO as follows:

(a) The director shall provide notification of requests by owners or operators of an air contaminant source to be covered under the terms of the general permit-to-install or general PTIO. The director shall publish notice in a newspaper of general circulation in each county in which the air contaminant source would be constructed, and provide electronic notification to interested parties.

(b) The director shall maintain, and make available to the public upon request, a list of all air contaminant source that have obtained a general permit-to-install or general PTIO.

(3) The director may require any applicant applying for a general permit-to-install or general PTIO to apply for and obtain an individual permit if it is determined that unique site specific circumstances warrant additional limitations or permit conditions to control or mitigate environmental impacts

that were not considered and addressed in the development and issuance of the general permit-to-install or general PTIO.

(4) Authorization to construct under the general permit-to-install or general PTIO shall be granted by the director in the form of a final permit action.

(5) If the model general permit that was the basis of any final general permit-to-install or general PTIO has been changed per the procedures in paragraph (A)(3) of this rule, then the director can issue revised general permits-to-install or general PTIOs with prior notice to the affected owner or operator following the issuance procedures defined in paragraph (D)(2) of this rule.

(E) Start construction limitation.

The owner or operator of a new or modified air contaminant source that qualifies for a general permit-to-install or general PTIO may not begin actual construction of the new or modified air contaminant source until the air contaminant source's owner or operator has been granted the authorization required by the director under paragraph (D)(4) of this rule.

(F) Modification or replacement of equipment.

(1) If the owner or operator of the air contaminant source covered by a general permit-to-install or general PTIO wishes to replace the air contaminant source, then the owner or operator must apply for and obtain either a general permit-to-install, general PTIO, individual permit-to-install, or an individual PTIO prior to beginning actual construction.

(2) If the owner or operator of the air contaminant source covered by a general permit-to-install or general PTIO wishes to modify the air contaminant source (per rule 3745-31-01 of the Administrative Code), then the owner or operator must apply for and obtain either a general permit-to-install, general PTIO, individual permit-to-install, or individual PTIO prior to beginning actual construction.

(3) If the owner or operator of the air contaminant source covered by a general permit-to-install or general PTIO wishes to administratively modify the air contaminant source, then the owner or operator must submit a request to the director, with supporting documentation, for that request.

(G) A general PTIO shall be effective for a period of time consistent with the requirements of division (F) of section 3704.03 of the Revised Code.

(H) General permit termination.

(1) Any owner or operator who was issued a general permit-to-install or general PTIO may request to be excluded from the coverage of the general permit-to-install or general PTIO by applying for an individual permit, alternative general permit-to-install, or alternative general PTIO. The owner or operator

shall submit an application with reasons supporting the request. If the director issues an individual permit, alternative general permit-to-install, or alternative general PTIO the applicability of the general permit-to-install or general PTIO to the individual permittee is automatically terminated on the effective date of the individual permit, alternative general permit-to-install, or alternative general PTIO.

(2) The director may revoke a general permit-to-install or general PTIO per rule 3745-31-07 of the Administrative Code.

(I) Enforcement action for failure to qualify or comply.

An air contaminant source's owner or operator who requests and is granted authority to install under a general permit-to-install or general PTIO shall be subject to enforcement action for installation without a permit if the air contaminant source is later determined not to qualify for the conditions and terms of the general permit-to-install or general PTIO.

Effective: 05/29/2014

Five Year Review (FYR) Dates: 01/10/2014 and 05/29/2019

CERTIFIED ELECTRONICALLY
Certification

05/19/2014
Date

Promulgated Under: 119.03
Statutory Authority: 3704.03(F), 3704.03(G)
Rule Amplifies: 3704.03(G), 3704.03(F), 3704.03(A)
Prior Effective Dates: 10/17/03, 11/3/06, 12/1/06, 6/30/08

OAC Rules 3745-31-30 and 3745-31-31 were rescinded as of May 29, 2014

3745-31-32 **Plantwide applicability limit (PAL).**

[Comment: For dates and availability of non-regulatory government publications, publications of recognized organizations and associations, federal rules, and federal statutory provisions referenced in this rule, see paragraph (LLLLLL) of rule 3745-31-01 of the Administrative Code entitled, "referenced materials."]

Actuals PAL requirements.

All PALs issued under this rule shall meet all applicable provisions in this rule.

(A) Applicability.

(1) The director may approve the use of an actuals PAL for any existing major stationary source (except as provided in paragraph (A)(2) of this rule) if the PAL meets the requirements in this rule. The term PAL shall mean actuals PAL throughout this rule.

(2) The director shall not allow an actuals PAL for VOC or nitrogen oxides for any major stationary source located in an extreme ozone nonattainment area.

(3) Any physical change in or change in the method of operation of a major stationary source that maintains its total source-wide emissions below the PAL level, meets the requirements in this rule, and complies with the PAL permit:

(a) Is not a major modification for the PAL pollutant.

(b) Does not have to be approved through the nonattainment or PSD program.

(c) Is not subject to the provisions in paragraph (D)(5) of rule 3745-31-05 of the Administrative Code (restrictions on relaxing enforceable emission limitations that the major stationary source used to avoid applicability of the nonattainment or PSD program).

(4) Except as provided under paragraph (A)(3)(c) of this rule, a major stationary source shall continue to comply with all applicable federal or state requirements, emission limitations, and work practice requirements that were established prior to the effective date of the PAL.

(B) Permit application requirements.

As part of a permit application requesting a PAL, the owner or operator of a major stationary source shall submit the following information to the director for approval:

(1) A list of all emissions units at the source designated as PAL small emissions unit, PAL significant emissions unit or PAL major emissions unit based on their potential to emit. In addition, the owner or operator of the source shall indicate which, if any, federal or state applicable requirements, emission limitations or work practices apply to each unit.

(2) Calculations of the baseline actual emissions (with supporting documentation). Baseline actual emissions are to include emissions associated not only with operation of the unit, but also emissions associated with startup, shutdown and malfunction.

(3) The calculation procedures that the major stationary source owner or operator proposes to use to convert the monitoring system data to monthly emissions and annual emissions based on a twelve-month rolling total for each month as required by paragraph (L)(1) of this rule.

(C) General requirements for establishing PALs.

(1) The requirements under this paragraph, at a minimum, shall be met for each PAL at a major stationary source:

(a) The PAL shall impose an annual emission limitation in tons per year, which is enforceable as a practical matter, for the entire major stationary source. For each month during the PAL effective period after the first twelve months of establishing a PAL, the major stationary source owner or operator shall show that the sum of the monthly emissions from each emissions unit under the PAL for the previous twelve consecutive months is less than the PAL (a twelve-month average, rolled monthly). For each month during the first eleven months from the PAL effective date, the major stationary source owner or operator shall show that the sum of the preceding monthly emissions from the PAL effective date for each emissions unit under the PAL is less than the PAL.

(b) The PAL shall be established in a PAL permit that meets the requirements in paragraph (D) of this rule.

(c) The PAL permit shall contain all the requirements of paragraph (F) of this rule.

(d) The PAL shall include fugitive emissions, to the extent quantifiable, from all emissions units that emit or have the potential to emit the PAL pollutant at the major stationary source.

(e) Each PAL shall regulate emissions of only one pollutant.

(f) Each PAL shall have a PAL effective period of ten years.

(g) The owner or operator of the major stationary source with a PAL shall comply with the monitoring, recordkeeping, and reporting requirements

provided in paragraphs (K) to (M) of this rule for each emissions unit under the PAL through the PAL effective period.

(2) At no time (during or after the PAL effective period) are emission reductions of a PAL pollutant, which occur during the PAL effective period, creditable as decreases for purposes of offsets under rule 3745-31-22 of the Administrative Code unless the level of the PAL is reduced by the amount of such emission reductions and such reductions would be creditable in the absence of the PAL.

(D) PAL permit issuance requirements.

(1) The director shall issue all typographical/calculation error reopenings (as described in paragraph (G)(2)(a) of this rule) to PAL permits as either draft actions before any final actions, or final actions, as described in Chapter 3745-49 of the Administrative Code.

(2) The director shall issue all PAL permits not otherwise described in paragraph (D)(1) of this rule as draft actions before any final actions, as described in Chapter 3745-49 of the Administrative Code.

(E) Setting the ten-year actuals PAL level.

(1) Except as provide in paragraph (E)(2) of this rule, the actuals PAL level for a major stationary source shall be established as the sum of the baseline actual emissions of the PAL pollutant for each emissions unit at the source; plus an amount equal to the applicable significant level for the PAL pollutant under rule 3745-31-01 of the Administrative Code or under the Clean Air Act, whichever is lower. When establishing the actuals PAL level, for a PAL pollutant, only one consecutive twenty-four-month period must be used to determine the baseline actual emissions for all existing emissions units. However, a different consecutive twenty-four-month period may be used for each different PAL pollutant. Emissions associated with emissions units that were permanently shutdown after this twenty-four-month period must be subtracted from the PAL level. Emissions from emissions units on which actual construction began after the twenty-four-month period must be added to the PAL level in an amount equal to the potential to emit of the units. The director shall specify a reduced PAL level, in tons per year, in the PAL permit to become effective on the future compliance date of any applicable federal or state regulatory requirement that the director is aware of prior to issuance of the PAL permit. For instance, if the source owner or operator will be required to reduce emissions from industrial boilers in half from baseline emissions of sixty parts per million nitrogen oxides to a new rule limit of thirty parts per million, then the PAL permit shall contain a future effective PAL level that is equal to the current PAL level reduced by half of the original baseline emissions of such emissions unit.

(2) For newly constructed emissions units, which do not include modifications to existing emissions units, on which actual construction began after the twenty-four-month period, in lieu of adding the baseline actual emissions as specified in paragraph (E)(1) of this rule, the emissions must be added to the PAL level in an amount equal to the potential to emit of the emissions units.

(F) Contents of the PAL permit.

The PAL permit shall contain, at a minimum, the following information:

(1) The PAL pollutant and the applicable source-wide emission limitation in tons per year.

(2) The PAL permit effective date and the expiration date of the PAL (PAL effective period).

(3) Specification in the PAL permit that if a major stationary source owner or operator applies to renew a PAL in accordance with paragraph (I) of this rule before the end of the PAL effective period, then the PAL shall not expire at the end of the PAL effective period. It shall remain in effect until a revised PAL permit is issued by the director.

(4) A requirement that emission calculations for compliance purposes include emissions from startups, shutdowns and malfunctions.

(5) A requirement that, once the PAL expires, the major stationary source is subject to the requirements of paragraph (H) of this rule.

(6) The calculation procedures that the major stationary source owner or operator shall use to convert the monitoring system data to monthly emissions and annual emissions based on a twelve-month rolling total for each month as required by paragraph (L)(1) of this rule.

(7) A requirement that the major stationary source owner or operator monitor all emissions units in accordance with the provisions under paragraph (K) of this rule.

(8) A requirement to retain the records required under paragraph (L) of this rule on site. Such records may be retained in an electronic format.

(9) A requirement to submit the reports required under paragraph (M) of this rule by the required deadlines.

(10) Any other requirements that the director deems necessary to implement and enforce the PAL.

(G) PAL effective period and reopening of the PAL permit.

(1) PAL effective period.

A PAL shall have an effective period of ten years.

(2) Reopening of the PAL permit.

(a) During the PAL effective period, the director shall reopen the PAL permit to:

(i) Correct typographical/calculation errors made in setting the PAL or reflect a more accurate determination of emissions used to establish the PAL.

(ii) Reduce the PAL if the owner or operator of the major stationary source creates creditable emission reductions for use as offsets under rule 3745-31-22 of the Administrative Code.

(iii) Revise the PAL to reflect an increase in the PAL as provided under paragraph (A)(10) of this rule.

(b) The director may reopen the PAL permit for the following:

(i) Reduce the PAL to reflect newly applicable federal requirements (for example, new source performance standards) with compliance dates after the PAL effective date.

(ii) Reduce the PAL consistent with any other requirement, that is enforceable as a practical matter, and that the director may impose on the major stationary source.

(iii) Reduce the PAL if the director determines that a reduction is necessary to avoid causing or contributing to a national ambient air quality standard or PSD increment violation, or to an adverse impact on an air quality related value (AQRV) that has been identified for a federal Class I area by a federal land manager and for which information is available to the general public.

(c) Except for the permit reopening in paragraph (G)(2)(a)(i) of this rule for the correction of typographical/calculation errors that do not increase the PAL level, all other reopenings shall be carried out in accordance with the public participation requirements of paragraph (D) of this rule.

(H) Expiration of a PAL.

Any PAL that is not renewed in accordance with the procedures in paragraph (I) of this rule shall expire at the end of the PAL effective period, and the following shall apply.

(1) Each emissions unit (or each group of emissions units) that existed under the PAL shall comply with an allowable emission limitation under a revised permit established according to the following.

(a) Within the time frame specified for PAL renewals in paragraph (I)(2) of this rule, the major stationary source shall submit a proposed allowable

emission limitation for each emissions unit (or each group of emissions units, if such a distribution is more appropriate as decided by the director) by distributing the PAL allowable emissions for the major stationary source among each of the emissions units that existed under the PAL. If the PAL had not yet been adjusted for an applicable requirement that became effective during the PAL effective period, as required under paragraph (I)(5) of this rule, such distribution shall be made as if the PAL had been adjusted.

(b) The director shall decide whether and how the PAL allowable emissions will be distributed and issue a revised permit incorporating allowable limits for each emissions unit, or each group of emissions units, as the director determines is appropriate.

(2) Each emissions unit shall comply with the allowable emission limitation on a twelve-month rolling basis. The director may approve the use of monitoring systems (source testing, emission factors, etc.) other than CEMS, CERMS, PEMS or CPMS to demonstrate compliance with the allowable emission limitation.

(3) Until the director issues the revised permit incorporating allowable limits for each emissions unit, or each group of emissions units, as required under paragraph (H)(1)(a) of this rule, the source shall continue to comply with a source-wide, multi-unit emissions cap equivalent to the level of the PAL emission limitation.

(4) Any physical change or change in the method of operation at the major stationary source will be subject to the nonattainment or a major NSR requirements if such change meets the definition of PAL major modification.

(5) The major stationary source owner or operator shall continue to comply with any state or federal applicable requirements (BACT, reasonably available control technology (RACT), new source performance standard (NSPS), LAER etc.) that may have applied either during the PAL effective period or prior to the PAL effective period except for those emission limitations that had been established pursuant to paragraph (E) of rule 3745-31-05 of the Administrative Code, but were eliminated by the PAL in accordance with the provisions in paragraph (A)(3)(c) of this rule.

(I) Renewal of a PAL.

(1) The director shall follow the procedures specified in paragraph (D) of this rule in approving any request to renew a PAL for a major stationary source, and shall provide both the proposed PAL level and a written rationale for the proposed PAL level to the public for review and comment. During such public review, any person may propose a PAL level for the source for consideration by the director.

(2) Application deadline.

A major stationary source owner or operator shall submit a timely application to the director to request renewal of a PAL. A timely application is one that is submitted at least six months prior to, but not earlier than eighteen months from, the date of PAL permit expiration. This deadline for application submittal is to ensure that the PAL permit will not expire before the PAL permit is renewed. If the owner or operator of a major stationary source submits a complete application to renew the PAL within this time period, then the PAL shall continue to be effective until the revised PAL permit with the renewed PAL is issued.

(3) Application requirements.

The application to renew a PAL permit shall contain the following information:

(a) The information required under paragraph (B) of this rule.

(b) A proposed PAL level.

(c) The sum of the potential to emit of all emissions units under the PAL (with supporting documentation).

(d) Any other information the owner or operator wishes the director to consider in determining the appropriate level for renewing the PAL.

(4) PAL adjustment.

In determining whether and how to adjust the PAL, the director shall consider the following options:

(a) If the emissions level calculated in accordance with paragraph (E) of this rule is equal to or greater than eighty per cent of the PAL level, the director may renew the PAL at the same level without considering the factors set forth in paragraph (I)(4)(b) of this rule.

(b) The director may set the PAL at a level that he/she determines to be more representative of the source's baseline actual emissions, or that he/she determines to be appropriate considering air quality needs, advances in control technology, anticipated economic growth in the area, desire to reward or encourage the source's voluntary emission reductions, or other factors as specifically identified by the director in a written rationale.

(c) In no case may any such adjustment fail to comply with the following:

(i) If the potential to emit of the major stationary source is less than the PAL, the director shall adjust the PAL to a level no greater than the potential to emit of the source.

(ii) The director shall not approve a renewed PAL level higher than the current PAL, unless the major stationary source has complied with the provisions of paragraph (J) of this rule.

(5) If the compliance date for a state or federal requirement that applies to the PAL source occurs during the PAL effective period, and if the director has not already adjusted for such requirement, the PAL shall be adjusted at the time of PAL permit renewal or Title V permit renewal, whichever occurs first.

(J) Increasing a PAL during the PAL effective period.

(1) The director may increase a PAL emission limitation only if the major stationary source complies with the following:

(a) The owner or operator of the major stationary source shall submit a complete application to request an increase in the PAL limit for a PAL major modification. Such application shall identify the emissions unit contributing to the increase in emissions so as to cause the major stationary source's emissions to equal or exceed its PAL.

(b) As part of this application, the major stationary source owner or operator shall demonstrate that the sum of the baseline actual emissions of the PAL small emissions units, plus the sum of the baseline actual emissions of the PAL significant and PAL major emissions units assuming application of BACT equivalent controls, plus the sum of the PAL allowable emissions of the new or modified emissions unit exceeds the PAL. The level of control that would result from BACT equivalent controls on each PAL significant or PAL major emissions unit shall be determined by conducting a new BACT analysis at the time the application is submitted, unless the emissions unit is currently required to comply with a BACT or LAER requirement that was established within the preceding ten years. In such a case, the assumed control level for that emissions unit shall be equal to the level of BACT or LAER with which that emissions unit must currently comply.

(c) The owner or operator obtains a nonattainment NSR permit or PSD permit for all emissions unit identified in paragraph (J)(1)(a) of this rule, regardless of the magnitude of the emissions increase resulting from them, that is, no significant levels apply. These emissions unit shall comply with any emissions requirements resulting from the major NSR program process, for example, LAER/BACT, even though they have also become subject to the PAL or continue to be subject to the PAL.

(d) The PAL permit shall require that the increased PAL level shall be effective on the day any emissions unit that is part of the PAL major modification becomes operational and begins to emit the PAL pollutant.

(2) The director shall calculate the new PAL as the sum of the PAL allowable emissions for each modified or new emissions unit, plus the sum of the baseline actual emissions of the PAL significant and PAL major emissions units (assuming application of BACT equivalent controls as determined in accordance with paragraph (J)(1)(b) of this rule, plus the sum of the baseline actual emissions of the PAL small emissions units.

(3) The PAL permit shall be revised to reflect the increased PAL level pursuant to the public notice requirements of paragraph (D) of this rule.

(K) Monitoring requirements for PALs.

(1) General requirements.

(a) Each PAL permit must contain enforceable requirements for the monitoring system that accurately determines plantwide emissions of the PAL pollutant in terms of mass per unit of time. Any monitoring system authorized for use in the PAL permit must be based on sound science and meet generally acceptable scientific procedures for data quality and manipulation. Additionally, the information generated by such system must meet minimum legal requirements for admissibility in a judicial proceeding to enforce the PAL permit.

(b) The PAL monitoring system must employ one or more of the four general monitoring approaches meeting the minimum requirements set forth under paragraph (K)(2) of this rule and must be approved by the director.

(c) Notwithstanding paragraph (K)(1)(b) of this rule, you may also employ an alternative monitoring approach that meets paragraph (K)(1)(a) of this rule if approved by the director.

(d) Failure to use a monitoring system that meets the requirements of this rule renders the PAL invalid.

(2) Minimum performance requirements for approved monitoring approaches.

The following are acceptable general monitoring approaches when conducted in accordance with the minimum requirements under paragraph (K)(3) of this rule:

(a) Mass balance calculations for activities using coatings or solvents.

(b) CEMS.

(c) CPMS or PEMS.

(d) Emission factors.

(3) Mass balance calculations.

An owner or operator using mass balance calculations to monitor PAL pollutant emissions from activities using coating or solvents shall meet the following:

(a) Provide a demonstrated means of validating the published content of the PAL pollutant that is contained in or created by all materials used in or at the emissions unit.

(b) Assume that the emissions unit emits all of the PAL pollutant that is contained in or created by any raw material or fuel used in or at the emissions unit, if it cannot otherwise be accounted for in the process.

(c) Where the vendor of a material or fuel, which is used in or at the emissions unit, publishes a range of pollutant content from such material, the owner or operator must use the highest value of the range to calculate the PAL pollutant emissions unless the director determines there is site-specific data or a site-specific monitoring program to support another content within the range.

(4) CEMS.

An owner or operator using CEMS to monitor PAL pollutant emissions shall meet the following:

(a) CEMS must comply with applicable performance specifications found in 40 CFR Part 60, Appendix B.

(b) CEMS must sample, analyze and record data at least every fifteen minutes while the emissions unit is operating.

(5) CPMS or PEMS.

An owner or operator using CPMS or PEMS to monitor PAL pollutant emissions shall meet the following:

(a) The CPMS or the PEMS must be based on current site-specific data demonstrating a correlation between the monitored parameter and the PAL pollutant emissions across the range of operation of the emissions unit.

(b) Each CPMS or PEMS must sample, analyze, and record data at least every fifteen minutes, or at another less frequent interval approved by the director, while the emissions unit is operating.

(6) Emission factors.

An owner or operator using emission factors to monitor PAL pollutant emissions shall meet the following:

(a) All emission factors shall be adjusted, if appropriate, to account for the degree of uncertainty or limitations in the factors' development.

(b) The emissions unit shall operate within the designated range of use for the emission factor, if applicable.

(c) If technically practicable, the owner or operator of a PAL significant emissions unit that relies on an emission factor to calculate PAL pollutant emissions shall conduct validation testing to determine a site-specific emission factor within six months of PAL permit issuance, unless the director determines that testing is not required.

(7) A source owner or operator must record and report maximum potential emissions without considering enforceable emission limitations or operational restrictions for an emissions unit during any period of time that there is no monitoring data, unless another method for determining emissions during such periods is specified in the PAL permit.

(8) Notwithstanding the requirements in paragraphs (K)(3) to (K)(7) of this rule, where an owner or operator of an emissions unit cannot demonstrate a correlation between the monitored parameter and the PAL pollutant emissions rate at all operating points of the emissions unit, the director shall, at the time of PAL permit issuance, do the following:

(a) Establish default value for determining compliance with the PAL based on the highest potential emissions reasonably estimated at such operating point.

(b) Determine that operation of the emissions unit during operating conditions when there is no correlation between monitored parameter and the PAL pollutant emissions is a violation of the PAL.

(9) Re-validation.

All data used to establish the PAL pollutant must be re-validated through performance testing or other scientifically valid means approved by the director. Such testing must occur at least once every five years after issuance of the PAL.

(L) Recordkeeping requirements.

(1) The PAL permit shall require an owner or operator to retain a copy of all records necessary to determine compliance with any requirement of this rule and of the PAL, including a determination of each emissions unit's twelve-month rolling total emissions, for five years from the date of such record.

(2) The PAL permit shall require an owner or operator to retain a copy of the following records for the duration of the PAL effective period plus five years:

(a) A copy of the PAL permit application and any applications for revisions to the PAL.

(b) Each annual certification of compliance pursuant to Title V and the data relied on in certifying the compliance.

(M) Reporting and notification requirements.

The owner or operator shall submit semi-annual monitoring reports and prompt deviation reports to the director in accordance with the applicable Title V operating permit program. The reports shall meet the following:

(1) Semi-annual report.

The semi-annual report shall be submitted to the director within thirty days of the end of each reporting period. This report shall contain the following information:

(a) The identification of owner and operator, the facility ID, and the permit-to-install numbers for any applicable permit-to-install.

(b) Total annual emissions, in tons per year, based on a twelve-month rolling total for each month in the reporting period recorded pursuant to paragraph (L)(1) of this rule.

(c) All data relied upon, including, but not limited to, any quality assurance or quality control data, in calculating the monthly and annual PAL pollutant emissions.

(d) A list of any emissions units modified or added to the major stationary source during the preceding six-month period.

(e) The number, duration, and cause of any deviations or monitoring malfunctions, other than the time associated with zero and span calibration checks, and any corrective action taken.

(f) A notification of a shutdown of any monitoring system, whether the shutdown was permanent or temporary, the reason for the shutdown, the anticipated date that the monitoring system will be fully operational or replaced with another monitoring system, and whether the emissions unit monitored by the monitoring system continued to operate, and the calculation of the emissions of the pollutant or the number determined by method included in the PAL permit, as provided by paragraph (K)(7) of this rule.

(g) A signed statement by the responsible official, as defined by the Title V operating permit program contained in Chapter 3745-77 of the Administrative Code, certifying the truth, accuracy, and completeness of the information provided in the report.

(2) Deviation report.

The major stationary source owner or operator shall promptly submit reports of any deviations or exceedance of the PAL requirements, including periods where no monitoring is available. A report submitted pursuant to paragraph (A)(3)(c)(iii) of rule 3745-77-07 of the Administrative Code shall satisfy this reporting requirement. The deviation reports shall be submitted within the time limits prescribed by the rule 3745-77-07 of the Administrative Code. The reports shall contain the following information:

(a) The identification of owner and operator, the facility ID, and the permit-to-install numbers for any applicable permit-to-install.

(b) The PAL requirement that experienced the deviation or that was exceeded.

(c) Emissions resulting from the deviation or the exceedance.

(d) A signed statement by the responsible official (as defined by the Title V operating permit program contained in Chapter 3745-77 of the Administrative Code) certifying the truth, accuracy, and completeness of the information provided in the report.

(3) Re-validation results.

The owner or operator shall submit to the director the results of any re-validation test or method within three months after completion of such test or method.

Effective: 05/29/2014

Five Year Review (FYR) Dates: 01/10/2014 and 05/29/2019

CERTIFIED ELECTRONICALLY
Certification

05/19/2014
Date

Promulgated Under: 119.03
Statutory Authority: 3704.03(F)
Rule Amplifies: 3704.03(A), 3704.03(F)
Prior Effective Dates: 10/28/04, 12/1/06, 6/30/08

3745-31-33 **Site preparation activities prior to obtaining a final permit-to-install or PTIO.**

(A) Under paragraph (A)(1) of rule 3745-31-02 of the Administrative Code, new air contaminant sources or modified air contaminant sources shall not be installed or modified until a final permit-to-install or PTIO is obtained from the director. This rule describes activities that can be undertaken prior to obtaining a final permit-to-install or PTIO and, are therefore, excluded from the definition of begin actual construction.

[Comment: Some activities described in this rule may not begin until any applicable national pollutant discharge elimination system (NPDES) permit, isolated wetland permit or 401 water quality certification is obtained. Notwithstanding any other provision of this rule, compliance with this chapter does not relieve any person from the requirements of Chapter 3734. or 3714. of the Revised Code and rules adopted thereunder.]

(B) Risk to the owner or operator

(1) This rule does not in any way guarantee that a final permit-to-install or PTIO will be issued.

(2) The implementation of any of the activities described in this rule are at the entire risk of the owner or operator.

(3) If a final permit-to-install or PTIO is issued, any necessary design changes, and the costs associated with those design changes (including costs due to delayed construction) in order to comply with the terms of the final permit-to-install or PTIO are entirely at the owner or operator's risk. Any costs associated with these design changes may not be used as part of any BAT, BACT, LAER or MACT determination cost-effectiveness evaluations.

(C) General restrictions

All construction activities must comply with any applicable fugitive dust requirements contained in rule 3745-17-08 of the Administrative Code.

(D) Installation of buildings or structures not containing air contaminant sources

The construction of warehouses, store rooms, office buildings, or other buildings or structures that are not planned to contain any air contaminant source(s) as part of an air contaminant source project may be constructed prior to obtaining a final permit-to-install or PTIO if the buildings or structures would be built (for business financial reasons) even though no final permit-to-install or PTIO could be obtained.

(E) Acceptable site preparation activities for any air contaminant source project

The following activities do not constitute beginning actual construction and may be undertaken prior to obtaining a final permit-to-install or PTIO for a particular air contaminant source project.

(1) Clearing the site of existing vegetation, old buildings, or old equipment.

(2) Grading and clearing of land, stripping and stockpiling topsoil, earthwork cut and fill for foundations in preparation for construction.

(3) Installing temporary site access roadways and parking areas.

(4) Installing temporary construction equipment storage areas.

(5) Storing of construction equipment including temporary buildings and trailers for equipment storage and for construction offices.

(6) Exploratory excavation and borings to assess the suitability of a site for the intended building or installation activities.

(7) Excavating building footers, pilings, foundations, pads, and platforms, etc. (note, no pouring of concrete is allowed).

(8) Installing concrete forms and reinforcing bar for any concrete footers, pilings, foundations, pads and platforms, etc. (note, no pouring of concrete is allowed).

(9) Installing temporary utilities for site construction including electricity, water, gas, communication and sanitary.

(10) Removing old equipment from existing buildings.

(11) Installation of any temporary construction dust control systems (sprinklers, etc.).

(12) Installation of any signage or traffic control signs.

(13) Installation of any utility poles by a utility company.

(14) Installation of temporary erosion and sedimentation control systems including hay bales, silt fences, rip-raps and sandbags.

(15) Installation of new landscaping including trees, bushes and seeding of disturbed earthwork.

(16) Installation of landscaping fencing.

(17) Installation of temporary fences and signs around the construction site.

(18) Stockpiling of stone, soil and other materials for future construction.

(F) Additional acceptable site preparation activities for any source that is not a major new or modified source (i.e., minor modifications and minor new sources)

The following additional site preparation activities may be undertaken prior to obtaining a final permit-to-install or PTIO provided the air contaminant source project is not a major modification, a major stationary source, or part of a permit-to-install or PTIO designed to avoid a major modification or classification of a major stationary source through permit-to-install or PTIO restrictions (known as a synthetic minor or netting permits avoiding major new source review). These activities may only be undertaken if the owner or operator has filed a complete application for a permit-to-install or PTIO,
the director or his/her designee has determined the application is administratively complete, and the owner or operator has provided notification, in a form and manner prescribed by the director, of the activities described in this rule that the owner or operator plans to undertake prior to receiving a final permit-to-install or PTIO.

(1) Installing electrical service for any air contaminant source(s) or air pollution control equipment up to the service panel for the new equipment. Connections to any air contaminant source(s) or air pollution control equipment cannot be made until a final permit-to-install or PTIO is issued and effective.

(2) Installing piping and sewers up to the point of connection to any air contaminant source(s) or air pollution control equipment. Connections to any air contaminant source(s) or air pollution control equipment cannot be made until a final permit-to-install or PTIO is issued and effective.

(3) Installing inlet air and exhaust duct work with the exception of final connections to the air contaminant source(s) or air pollution control equipment.

(4) Installing site drainage systems including ditches, culverts, earthwork for underground storm drains, headwalls and catch basins. This is authorized only if any necessary storm water permits have been obtained.

(5) Installing concrete footers, foundations, pads and platforms for the building or for equipment.

(6) Installing any permanent roadways and parking areas not required under this chapter to obtain a permit-to-install or PTIO.

(7) Storing parts and equipment of the air contaminant source(s) or air pollution control equipment.

(8) Construction of new or expanded buildings, or the renovation or upgrading of existing buildings, in preparation for the installation of new or modified air contaminant source(s) or air pollution control equipment.

(9) Equipment that constitutes a component of an air contaminant source (including air pollution control equipment) may be delivered to the site prior to obtaining a final permit-to-install or a PTIO if the following criteria are met:

(a) If the equipment is to be installed in an existing building, then it may be placed in its final location and secured. No utilities, piping, or duct work may be connected to the equipment. The equipment shall not be operated.

(b) If the equipment is to be installed in a building that has not yet been built, then it can either be secured on the foundation of its final site or may be located anywhere on the property. No utilities, piping, or duct work may be connected to the equipment. The equipment shall not be operated.

(G) The director, at his/her discretion and in writing, may determine that an activity not listed in paragraphs (E) and (F) of this rule is an activity that can be undertaken prior to obtaining a final permit-to-install or PTIO for an air contaminant source project. Any activity approved by the director must meet the requirements described in division (F)(5) of section 3704.03 of the Revised Code and must meet all applicable law. A request for approval of these activities shall be made in writing and shall provide: a detailed description of the desired activities; an analysis of why the activities are allowed under all state and federal air pollution rules, regulations and/or laws; and a description of the adverse consequences that would occur to the permittee if the activities were not allowed prior to obtaining a final permit-to-install or PTIO.

Effective: 06/30/2008

R.C. 119.032 review dates: 12/01/2011

CERTIFIED ELECTRONICALLY
Certification

06/02/2008
Date

Promulgated Under: 119.03
Statutory Authority: 3704.03(F), 3704.03(G)
Rule Amplifies: 3704.03(G), 3704.03(F), 3704.03(A)
Prior Effective Dates: 12/1/06

3745-31-34 **Permits to install for major stationary sources and major modifications of sources emitting greenhouse gases.**

[Comment: For dates of non-regulatory government publications, publications of recognized organizations and associations, federal rules, and federal statutory provisions referenced in this rule, see the "Referenced materials" section at the end of this rule.]

[Comment: "Greenhouse gases" subject to regulation as defined in 40 CFR Part 51.166 consist of the aggregate group of six greenhouse gases: Carbon dioxide, nitrous oxide, methane, hydrofluorocarbons, perfluorocarbons, and sulfur hexafluoride."

(A) Notwithstanding any provisions in Chapter 3745-31 of the Administrative Code to the contrary, on or after January 2, 2011, permits-to-install for new major stationary sources that will emit or have the potential to emit seventy-five thousand tons or more per year of CO_2 equivalent emissions of greenhouse gases and for modifications of existing major stationary sources that will result in a significant net increase in emissions of one or more regulated NSR pollutants other than greenhouse gases and also an emissions increase and a net emissions increase of seventy-five thousand tons or more per year of CO_2 equivalent emissions of greenhouse gases shall be required as provided in this rule and only to the extent required in 40 CFR Section 51.166. After July 1, 2011, permits to install for new major stationary sources that will emit or have the potential to emit one hundred thousand tons or more per year of CO_2 equivalent emissions of greenhouse gases and for modifications of existing stationary sources that will result in an emissions increase and a net emissions increase of seventy-five thousand tons or more per year of CO_2 equivalent emissions of greenhouse gases shall be required as provided in this rule and only to the extent required in 40 CFR Section 51.166. For the purpose of this rule, "CO_2 equivalent emissions" and "greenhouse gases" shall have the same meaning as set forth in 40 CFR 51.166.

(B) For purposes of this rule, any new stationary source for which actual CO_2 equivalent emissions of greenhouse gases do not exceed one hundred thousand tons per year after July 1, 2011, and any existing major stationary source for which the increase and net emissions increase of actual CO_2 equivalent emissions of greenhouse gases do not exceed seventy-five thousand tons per year caused by a physical change or change in the method of operation that occurs after July 1, 2011, shall be deemed to have the potential to emit below the greenhouse gas permitting thresholds set forth in paragraph (A) of this rule if the owner or operator of such source has on or before July 1, 2011 submitted a complete application for a permit to limit the potential to emit CO_2 equivalent emissions of greenhouse gases from such source to less than one hundred thousand tons per year in the case of new stationary sources and to less than seventy-five thousand tons per year in the case of modifications to existing major stationary sources unless and until the application is withdrawn or the director takes final action on the application that does not limit the potential to emit to not more than the greenhouse gas emission permitting thresholds set forth in paragraph (A) of this rule.

(C) This rule and any terms or conditions of permits-to-install issued to major stationary sources or for major modifications regarding greenhouse gases shall cease to be effective if any of the following occurs:

(1) Enactment of federal legislation depriving the administrator of authority, limiting the administrator's authority, or requiring the administrator to delay the exercise of authority, to regulate greenhouse gases under the Clean Air Act;

(2) The issuance of any opinion, ruling, judgment, order, or decree by a federal court depriving the administrator of authority, limiting the administrator's authority, or requiring the administrator to delay the exercise of authority, to regulate greenhouse gases under the Clean Air Act, including but not limited to any federal court decision staying, voiding, or invalidating the effectiveness of any of the actions of the administrator set forth in the greenhouse gas endangerment finding (74 Fed. Reg. 66496, December 15, 2009), the motor vehicle greenhouse gas tailpipe standards (75 Fed. Reg. 25324, May 7, 2010), the requirement to obtain prevention of significant deterioration permits and Title V permits as provided in the greenhouse gas tailoring rule (75 Fed. Reg. 31514, June 3, 2010, as amended 76 FR 43490, July 20, 2011), or the narrowed "State Implementation Plan" approval established in the "Limitation of Approval of Prevention of Significant Deterioration Provisions Concerning Greenhouse Gas Emitting-Sources in State Implementation Plans; Final Rule" (75 FR 82536, December 30, 2010) or finding any such action, in whole or in part, to be arbitrary, capricious, or otherwise not in accordance with law; or

(3) Action by the president of the United States or the president's authorized agent, including the administrator, to repeal, withdraw, suspend, postpone, or stay the amendments to 40 CFR Section 51.166 or to otherwise limit or delay the Administrator's exercise of authority to require preconstruction permitting of sources of greenhouse gas emissions.

(D) To the extent that any action or determination listed in paragraphs (C)(1) to (C)(3) of this rule requires the permitting of any stationary source of greenhouse gas emissions at levels below the permitting thresholds set forth in paragraph (A) of this rule, the permitting thresholds in paragraph (A) of this rule shall remain in effect unless and until this rule is amended or rescinded.

(E) The following rules and paragraphs found in this chapter are among those that do not apply to greenhouse gases:

(1) Rule 3745-31-11 of the Administrative Code, "Attainment provisions - ambient air increments, ceilings and classifications";

(2) Paragraphs (C)(4) and (C)(5) of rule 3745-31-12 of the Administrative Code, "Attainment provisions - data submission requirements";

(3) Rule 3745-31-14 of the Administrative Code, "Attainment provisions - preapplication analysis";

(4) Rule 3745-31-16 of the Administrative Code, "Attainment provisions - major stationary source impact analysis";

(5) Rule 3745-31-17 of the Administrative Code, "Attainment provisions - additional impact analysis";

(6) Rule 3745-31-18 of the Administrative Code, "Attainment provisions - air quality models";

(7) Paragraphs (C) and (D) of rule 3745-31-19 of the Administrative Code, "Attainment provisions - notice to the United States environmental protection agency"; and

(8) Paragraph (A)(3) of rule 3745-31-05 of the Administrative Code, "Best Available Technology (BAT)."

(F) No permit to install shall be required due to greenhouse gas emissions from any stationary source under this chapter, and greenhouse gases shall not be deemed to be an air contaminant source subject to regulation or regulated NSR pollutants under this chapter, unless the greenhouse gas emissions from the source exceeds the permitting thresholds set forth in paragraph (A) of this rule. Nothing in this rule is intended to be, and nothing in this rule shall be interpreted to be, an "emission limitation" or "emission standard" within the meaning of section 302(k) of the Clean Air Act, or a "control requirement" within the meaning of section 193 of the Clean Air Act.

(G) Referenced materials. This rule includes references to certain matter or materials. The text of the referenced materials is not included in this rule. Information on the availability of the referenced materials as well as the date of, and/or the particular edition or version of the referenced material is included in this rule. For materials subject to change, only the specific versions specified in this rule are referenced. Material is referenced as it exists on the effective date of this rule. Except for subsequent annual publication of existing (unmodified) Code of Federal Regulation compilations, any amendment or revision to a referenced document is not applicable unless and until this rule has been amended to specify the new dates.

(1) Availability. The referenced materials are available as follows:

(a) Clean Air Act. Information and copies may be obtained by writing to: "Superintendent of Documents, Attn: New Orders, PO Box 371954, Pittsburgh, PA 15250-7954." The full text of the act as amended in 1990 is also available in electronic format at www.epa.gov/oar/caa/. A copy of the act is also available for inspection and copying at "The State Library of Ohio."

(b) Code of Federal Regulations. Information and copies may be obtained by writing to: "Superintendent of Documents, Attn: New Orders, PO Box

371954, Pittsburgh, PA 15250-7954." The full text of the CFR is also available in electronic format at www.access.gpo.gov/nara/cfr/. The CFR compilations are also available for inspection and copying at most public libraries and "The State Library of Ohio."

(c) Federal Register. Information and copies may be obtained by writing to: "Superintendent of Documents, Attn: New Orders, PO Box 371954, Pittsburgh, PA 15250-7954." Text of the Federal Register is also available in electronic format at www.gpoaccess.gov/fr/index.html. The Federal Register is also available for inspection and copying at most Ohio public libraries and "The State Library of Ohio."

(2) Referenced materials.

(a) 40 CFR 51.166; "Prevention of significant deterioration of air quality"; 75 FR 31606, June 3, 2010; 76 FR 43490, July 20, 2011.

(b) 40 CFR 70.2; "Definitions"; 57 FR 32295, July 21, 1992, as amended at 66 FR 59166, Nov. 27, 2001; 69 FR 31505, June 3, 2004; 72 FR 24078, May 1, 2007; 74 FR 51438, Oct. 6, 2009; 75 FR 31514, June 3, 2010; 76 FR 43490, July 20, 2011.

(c) Section 193 of the Clean Air Act; contained in 42 USC 7515; "General savings clause"; published January 5, 2009 in supplement II of the 2006 edition of the United States Code.

(d) Section 302 of the Clean Air Act; contained in 42 USC 7602; "Definitions"; published January 5, 2009 in supplement II of the 2006 edition of the United States Code.

(e) "Prevention of Significant Deterioration and Title V Greenhouse Gas Tailoring Rule; Final Rule"; 75 FR 31514, June 3, 2010; 76 FR 43490, July 20, 2011.

Effective: 03/22/2012

R.C. 119.032 review dates: 03/31/2016

CERTIFIED ELECTRONICALLY
Certification

03/12/2012
Date

Promulgated Under: 119.03
Statutory Authority: 3704.03(F), 3704.03(G)
Rule Amplifies: 3704.03(F), 3704.03(G) , 3704.03(A)
Prior Effective Dates: 3/31/11

Chapter 3745-35: Reserved

OAC Chapter 3745-35, formerly “Air Permits to Operate and Variances”, was rescinded on June 30, 2008 and replaced by the new Permit-to-Install and Operate Program in OAC Chapter 3745-31. Historic versions of the rules can be viewed on Ohio EPA DAPC’s website at:

http://www.epa.ohio.gov/dapc/regs/3745_35.aspx

Chapter 3745-71: Lead Emissions

Contact: Jennifer Van Vlerah 614-644-3696
jennifer.vanvlerah@epa.ohio.gov

3745-71-01 **Definitions and reference to materials.**

(A) The definition in this rule shall apply to this chapter.

"Lead" means solid or gaseous lead and its compounds as measurable by the methods specified in rule 3745-71-03 of the Administrative Code.

(B) Reference to materials. This chapter includes references to certain matter or materials. The text of the referenced material is not included in the rules contained in this chapter. Information on the availability of the referenced materials as well as the date of, and/or the particular edition or version of the material is included in this rule. For materials subject to change, only the specific versions specified in this rule are referenced. Material is referenced as it exists on the effective date of this rule. Except for subsequent annual publication of existing (unmodified) Code of Federal Regulation compilations, any amendment or revision to a referenced document is not applicable unless and until this rule has been amended to specify the new dates.

(1) Availability. The referenced materials are available as follows:

Code of Federal Regulations (CFR). Information and copies may be obtained by writing to: "Superintendent of Documents, Attn: New Orders, P.O. Box 371954, Pittsburgh, PA 15250-7954." The full text of the CFR is also available in electronic format at www.access.gpo.gov/. The CFR compilations are also available for inspection and copying at most public libraries and "The State Library of Ohio."

(2) Referenced materials:

(a) 40 CFR Part 53; "Ambient Air Monitoring Reference and Equivalent Methods;" as published in the July 1, 2010 Code of Federal Regulations.

(b) Appendix G, contained in 40 CFR Part 50; "Reference Method for the Determination of Lead in Suspended Particulate Matter Collected From Ambient Air;" as published in the July 1, 2010 Code of Federal Regulations.

Effective: 08/26/2011

R.C. 119.032 review dates: 08/26/2016

CERTIFIED ELECTRONICALLY
Certification

08/16/2011
Date

Promulgated Under: 119.03
Statutory Authority: 3704.03(E)
Rule Amplifies: 3704.03(A), 3704.03(E)

3745-71-02 **Ambient air quality standards - lead.**

This rule has been rescinded as of 4/18/09.

The rule language has been moved to OAC rule 3745-25-02.

3745-71-03 **Methods of ambient air measurement.**

[Comment: For dates of non-regulatory government publications, publications of recognized organizations and associations, federal rules, and federal statutory provisions referenced in this rule, see paragraph (B) of rule 3745-71-01 of the Administrative Code titled "Reference to materials."]

For the purposes of ascertaining, defining and measuring ambient air quality, lead shall be measured by the test methods in Appendix G of 40 CFR Part 50 "Reference Method for the Determination of Lead in Suspended Particulate Matter Collected From Ambient Air" or by equivalent test methods approved in accordance with 40 CFR Part 53.

Effective: 08/26/2011

R.C. 119.032 review dates: 06/06/2011 and 08/26/2016

CERTIFIED ELECTRONICALLY
Certification

08/16/2011
Date

Promulgated Under: 119.03
Statutory Authority: 3704.03(E)
Rule Amplifies: 3704.03(A), 3704.03(E)
Prior Effective Dates: 3/27/81, 10/4/94, 3/27/06

3745-71-04 **Attainment date.**

This rule has been rescinded as of 8/26/2011.

3745-71-05 **Emissions test methods and procedures and reporting requirements for new and existing sources.**

This rule has been rescinded as of 8/26/2011.

3745-71-06 **Source specific emission limits.**

This rule has ben rescinded as of 8/26/2011.

Chapter 3745-72: Low Reid Vapor Pressure Fuel Requirements

Contact: Alan Harness 614-644-4838
Alan.Harness@epa.ohio.gov

3745-72-01 **Applicability.**

Comment: For dates of non-regulatory government publications, publications of recognized organizations and associations, federal rules, and federal statutory provisions referenced in this rule, see the last paragraph of rule 3745-72-02 of the Administrative Code titled "Incorporation by reference."

(A) Beginning twelve months after final approval by USEPA under Section 211(c)(4)(C) of the Clean Air Act of Ohio's state implementation plan that requires the use of low Reid vapor pressure gasoline, this Chapter applies to all gasoline sold or dispensed for use in the Dayton area and Cincinnati area between June first and September fifteenth. If at the end of twelve months, three months of the low RVP control period have already elapsed, this chapter shall not apply until the low RVP control period of the next calendar year.

(B) This chapter also applies to all gasoline sold or dispensed for use in the Cleveland area, the Dayton area and/or the Cincinnati area eight months after a violation of the ambient air quality standard for ozone, as determined by 40 CFR Part 50, appendix H is measured in the area and the control programs required under the reasonable further progress plan (created pursuant to section 182(b)(1) of the Clean Air Act) are implemented in the area. If, at the end of the eight-month period, three months of the low RVP control period have already elapsed, this chapter shall not apply until the low RVP control period of the next calendar year. If any extensions are granted under section 181(a)(5) of the Clean Air Act, this chapter will not apply until eight months after such extensions have expired.

(C) This chapter also applies to all gasoline sold or dispensed for use in Stark, Jefferson, Columbiana and/or Preble counties eight months after a violation of the ambient air quality standard for ozone, as determined by 40 CFR Part 50, Appendix H is measured in the area and only if the request for redesignation for the area (created pursuant to section 107(d)(1)(E) of the Clean Air Act) has been approved by the U.S. environmental protection agency. If, at the end of the eight-month period, three months of the low RVP control period have already elapsed, this chapter shall not apply until the low RVP control period of the next calendar year.

(D) For the purposes of this chapter, the Cleveland area includes Cuyahoga, Ashtabula, Lake, Lorain, Geauga, Summit, Medina and Portage counties; the Dayton area includes Montgomery, Miami, Greene and Clark counties; and the Cincinnati area includes Hamilton, Butler, Warren and Clermont counties.

(E) Temporary waivers during supply emergencies.

(1) The director may temporarily waive a control or prohibition respecting the use of a fuel or fuel additive required or regulated by the director pursuant to rules

3745-72-03 and 3745-72-04 of the Administrative Code if the director determines that:

(a) Extreme and unusual fuel or fuel additive supply circumstances exist in the state or portion of the state that prevent the distribution of an adequate supply of the fuel or fuel additive to consumers;

(b) Such extreme and unusual fuel and fuel additive supply circumstances are the result of a natural disaster, an act of God, a pipeline or refinery equipment failure, or another event that could not reasonably have been foreseen or prevented; and

(c) It is in the public interest to grant the waiver (for example, when a waiver is necessary to meet projected temporary shortfalls in the supply of the fuel or fuel additive in a state or portion of the state that cannot otherwise be compensated for).

(2) If the director makes the determinations required under paragraph (E)(1) of this rule such a temporary extreme and unusual fuel and fuel additive supply circumstances waiver shall be permitted only if:

(a) The waiver applies to the smallest geographic area necessary to address the extreme and unusual fuel and fuel additive supply circumstances;

(b) The waiver is effective for a period of twenty calendar days or, if the director determines that a shorter waiver period is adequate, for the shortest practicable time period necessary to permit the correction of the extreme and unusual fuel and fuel additive supply circumstances and to mitigate impact on air quality;

(c) The waiver may be issued for a longer time period during the initial compliance period but only for the shortest practical time period necessary to permit the correction of the extreme and unusual fuel and fuel additive supply circumstances and to mitigate impact on air quality;

(d) The waiver permits a transitional period, the exact duration of which shall be determined by the director, after the termination of the temporary waiver to permit wholesalers and retailers to blend down their wholesale and retail inventory;

(e) The waiver applies to all persons in the motor fuel distribution system; and

(f) The director has given public notice to all parties in the motor fuel distribution system, and local and state regulators, in the state or region to be covered by the waiver.

(3) Nothing in this paragraph shall:

(a) Limit or otherwise affect the application of any other waiver authority of the director pursuant to this section or pursuant to a regulation promulgated pursuant to this rule; or

(b) Subject any person to an enforcement action, penalties, or liability solely arising from actions taken pursuant to the issuance of a waiver under this paragraph.

Effective: 07/17/2006

R.C. 119.032 review dates: 01/16/2011

CERTIFIED ELECTRONICALLY
Certification

07/07/2006
Date

Promulgated Under: 119.03
Statutory Authority: R.C. 3704.03(E)
Rule Amplifies: R.C. 3704.03(A) and 3704.03(E)
Prior Effective Dates: 11/8/94, 01/16/06, 4/24/06(emer.)

3745-72-02 **Definitions.**

Comment: For dates of non-regulatory government publications, publications of recognized organizations and associations, federal rules, and federal statutory provisions referenced in this rule, see paragraph (C) of this rule titled "Reference to materials."

(A) Except as otherwise provided in paragraph (B) of this rule, the definitions in rule 3745-15-01 of the Administrative Code shall apply to this chapter.

(B) For the purpose of this chapter:

(1) "Carrier" means any person who transports, stores, or causes the transportation or storage of gasoline at any point in the gasoline distribution network, without taking title to or otherwise having ownership of the gasoline and without altering the quality or quantity of the gasoline.

(2) "Clean Air Act Amendments" means the Clean Air Act Amendments of 1990, 42 USC 7401 to 7671.

(3) "Conventional gasoline" means any gasoline that is not a low Reid vapor pressure gasoline.

(4) "Distributor" means any person who transports or stores or causes the transportation or storage of gasoline at any point between any gasoline refinery or importer's facility and any retail outlet or wholesale purchaser-consumer's facility.

(5) "Ethanol blender" means a person who owns, leases, operates, controls or supervises an ethanol blending facility.

(6) "Gasoline" means any fuel sold for use in motor vehicles and motor vehicle engines, and commonly or commercially known or sold as gasoline, except such fuel used at any mobile source "research and developement source," as defined in division (O) of section 3704.01 of the Revised Code.

(7) "Gasoline distribution network" means any person involved with the distribution of gasoline starting with the refiner and ending with the retailer or wholesale purchaser-consumer.

(8) "Importer" means a person who imports gasoline or gasoline blending stocks or components from a foreign country into the United States or into the Commonwealth of Puerto Rico, the Virgin islands, Guam, American Samoa, and the northern Mariana islands.

(9) "Low Reid vapor pressure control area" means a geographic area in which only gasoline with a Reid vapor pressure of 7.8 P.S.I. or less may be sold or dispensed within its boundaries. The geographic areas are specified in rule 3745-72-01 of the Administrative Code.

(10) "Low Reid vapor pressure control area terminal" means a terminal which is capable of receiving gasoline in bulk from carriers which include but are not limited to, pipelines, marine vessels or barges, and/or at which gasoline is altered either in quantity or quality. Gasoline which is intended for use in any low Reid vapor pressure control area is sold or dispensed into trucks at these low Reid vapor pressure control area terminals.

(11) "Low Reid vapor pressure control period" means the time period beginning June first and ending September fifteenth of each calendar year.

(12) "Low Reid vapor pressure gasoline" means any gasoline which has a Reid vapor pressure of 7.8 P.S.I. or less, except as provided in paragraph (A) of rule 3745-72-07 of the Administrative Code.

(13) "Motor Fuel System" shall be defined by the director through rulemaking.

(14) "Motor vehicle" has the same meaning as in section 4501.01 of the Revised Code.

(15) "P.S.I." means pounds per square inch absolute.

(16) "Refiner" means any person who owns, leases, operates, controls or supervises a refinery which produces gasoline for use in a low Reid vapor pressure control area.

(17) "Refinery" means a plant at which gasoline is produced.

(18) "Reid vapor pressure" means the absolute vapor pressure of volatile crude oil and volatile nonviscous petroleum liquids, except liquified petroleum gases, as determined by ASTM D323-99a.

(19) "Reseller" means any person who purchases gasoline and resells or transfers it to a retailer or a wholesale purchaser-consumer when the resale and/or transfer does not include changing, blending or in any way altering the specifications of the gasoline with respect to Reid vapor pressure, ethanol content or any other parameter.

(20) "Retail outlet" means any establishment at which gasoline is sold or offered for sale to the ultimate consumer for use in motor vehicles.

(21) "Retailer" means any person who owns, leases, operates, controls or supervises a retail outlet.

(22) "R.V.P." means Reid vapor pressure.

(23) "Wholesale purchaser-consumer" means any person who is an ultimate consumer of gasoline and who purchases or obtains gasoline from a distributor for use in motor vehicles.

(C) Reference to materials. This chapter includes references to certain matter or materials. The text of the referenced materials is not included in the rules contained in this chapter. Information on the availability of the referenced materials as well as the date of and/or the particular edition or version of the material is included in this rule. For materials subject to change, only the specific versions specified in this rule are referenced. Material is incorporated as it exists on the effective date of this rule. Except for referenced annual publication of existing (unmodified) Code of Federal Regulation compilations, any amendment or revision to a referenced document is not applicable unless and until this rule has been amended to specify the new dates.

(1) Availability. The referenced materials are available as follows:

(a) American Society for Testing Materials (ASTM). Information and copies of documents may be obtained by writing to: "ASTM International, 100 Bar Harbor Drive, P.O. Box C700, West Conshohocken, Pennsylvania 19426-2959." These documents are also available for purchase at www.astm.org. ASTM documents are also available for inspection and copying at most public libraries and "The State Library of Ohio."

(b) Clean Air Act as defined in this rule. Information and copies may be obtained by writing to: "Superintendent of Documents, Attn: New Orders, PO Box 371954, Pittsburgh, PA 15250-7954." The full text of the act as amended in 1990 is also available in electronic format at www.epa.gov/oar/caa/. A copy of the act is also available for inspection and copying at most public libraries and "The State Library of Ohio."

(c) Code of Federal Regulations (CFR). Information and copies may be obtained by writing to: "Superintendent of Documents, Attn: New Orders, PO Box 371954, Pittsburgh, PA 15250-7954." The full text of the CFR is also available in electronic format at www.access.gpo.gov/nara/cfr/. The CFR compilations are also available for inspection and copying at most public libraries and "The State Library of Ohio."

(d) United States Code. Information and copies may be obtained by writing to: "Superintendent of Documents, Attn: New Orders, PO Box 371954, Pittsburgh, PA 15250-7954." The full test of the United States Code is also available in electronic format at http://www4.law.cornell.edu.uscode/. The

U.S.C. compilations are also available for inspection and copying at most public libraries and "The State Library of Ohio."

(2) Referenced materials.

(a) 40 CFR 80.8; "Sampling methods for gasoline and diesel fuel;" 67 FR 8736, Feb. 26, 2002.

(b) 40 CFR 80.46; "Measurement of reformulated gasoline fuel parameters;" 59 FR 7813, Feb. 16, 1994, as amended at 59 FR 36961, July 20, 1994; 61 FR 58306, Nov. 13, 1996; 63 FR 63793, Nov. 17, 1998; 65 FR 6822, Feb. 10, 2000; 65 FR 53189, Sept. 1 2000; 66 FR 17263, Mar. 29, 2001; 67 FR 8737, Feb. 26, 2002; 67 FR 40181, June 12, 2002; 68 FR 56781, Oct. 2, 2003; 68 FR 57819, Oct. 7, 2003.

(c) 40 CFR Part 50, Appendix H; "Interpretation of the 1-Hour Primary and Secondary National Ambient Air Quality Standards for Ozone;" 44 FR 8220, Feb. 8, 1979, as amended at 62 FR 38895, July 18, 1997.

(d) 42 USC. 7401 to 7671q; "The Public Health and Welfare-Air Pollution Prevention and Control;" as published January 3, 2007 in the 2006 edition of the United States Code.

(e) ASTM D323-99a; "Standard Test Method for Vapor Pressure of Petroleum Products (Reid Method);" approved April 10, 1999.

(f) Section 107(d)(1)(E) of the Clean Air Act; contained in 42 USC 7407(d)(3)(E); "Redesignation;" published January 3, 2007 in the 2006 edition of the United States Code.

(g) Section 181(a)(5) of the Clean Air Act; contained in 42 USC 7511(a)(5); "Classification and attainment dates for 1989 nonattainment areas;" published January 3, 2007 in the 2006 edition of the United States Code.

(h) Section 182(b)(1) of the Clean Air Act; contained in 42 USC 7511(b)(1); "New designations and reclassifications;" published January 3, 2007 in the 2006 edition of the United States Code.

(i) Section 211(c)(4)(C) of the Clean Air Act; contained in 42 USC 7545(c)(2)(C); "New Fuels and Fuel Additives;" published January 3, 2007 in the 2006 edition of the United States Code.

(j) Section 211(f)(4) of the Clean Air Act; contained in 42 USC 7545(f)(4); "New Fuels and Fuel Additives;" published January 3, 2007 in the 2006 edition of the United States Code.

Effective: 05/12/2011

R.C. 119.032 review dates: 01/03/2011 and 08/04/2015

CERTIFIED ELECTRONICALLY
Certification

05/02/2011
Date

Promulgated Under: 119.03
Statutory Authority: 3704.03(E)
Rule Amplifies: 3704.03(A), 3704.03(E)
Prior Effective Dates: 11/08/94, 01/16/06, 4/24/06(emer.), 7/16/06

3745-72-03 **Gasoline volatility standards and general provisions.**

(A) During the low R.V.P. control period, no refiner, importer, distributor, reseller, carrier, retailer or wholesale purchaser-consumer shall sell, offer for sale, dispense, supply, offer for supply, or transport (for use in a low R.V.P. control area) gasoline that has a R.V.P. exceeding 7.8 P.S.I.

(B) Compliance with the 7.8 P.S.I. standard shall be determined by use of one of the sampling and testing methodologies specified in rule 3745-72-08 of the Administrative Code.

(C) Liability for violations of the 7.8 P.S.I. standard shall be determined according to rule 3745-72-05 of the Administrative Code.

Effective: 01/16/2006

R.C. 119.032 review dates: 10/28/2005 and 01/16/2011

CERTIFIED ELECTRONICALLY
Certification

01/05/2006
Date

Promulgated Under: 119.03
Statutory Authority: ORC 3704.03(E)
Rule Amplifies: ORC 3704.03(A) and ORC 3704.03(E)
Prior Effective Dates: 11/08/1994

3745-72-04 **Transfer documentation and recordkeeping.**

Comment: For dates of non-regulatory government publications, publications of recognized organizations and associations, federal rules, and federal statutory provisions referenced in this rule, see the last paragraph of rule 3745-72-02 of the Administrative Code titled "Incorporation by reference."

(A) Each time that the physical custody or title of low R.V.P. gasoline changes hands (excluding when gasoline is sold or dispensed for use in motor vehicles at a retail outlet or wholesale purchaser-consumer facility), the transferor shall provide to the transferee, on or in addition to normal bills of lading, invoices, and the like, a document containing information regarding that shipment. This document shall accompany every shipment of gasoline after it has been dispensed or sold. The document shall contain, at a minimum, the following information:

(1) The date of transfer.

(2) The volume of the gasoline being transferred.

(3) If the gasoline is ethanol blended, the percentage by volume of ethanol in the gasoline.

(4) The location of the gasoline at the time of the transfer.

(5) A statement certifying that the gasoline has an R.V.P. of 7.8 P.S.I. or less, except as provided in rule 3745-72-07 of the Administrative Code.

(B) No person in the gasoline distribution network may sell, dispense or transfer low R.V.P. gasoline intended for use in a low R.V.P. control area without transfer documents that accurately contain the information listed in paragraph (A) of this rule.

(C) A terminal operator who sells or dispenses gasoline intended for use in a low R.V.P. control area during the low R.V.P. control period may not accept gasoline into the terminal or dispense gasoline unless all of the following requirements are met:

(1) Transfer documentation that accompanies the low R.V.P. gasoline contains the information listed in paragraph (A) of this rule.

(2) The terminal owner or operator conducts a quality assurance program including, but not limited to, periodic product sampling and testing in accordance with 40 CFR 80.8 and rule 3745-72-08 of the Administrative Code.

(3) Low R.V.P. gasoline is segregated from conventional gasoline.

(4) Clearly marked documents accompany the conventional gasoline labeling it as "conventional gasoline, not for sale to the ultimate consumer in a low R.V.P. control area."

(D) During the low R.V.P. control period, no refiner, importer, ethanol blender, carrier, distributor, reseller, or person may sell, offer for sale, dispense, supply or offer for supply gasoline for use in a low R.V.P. control area that is represented as low R.V.P. gasoline if the gasoline does not meet the definition of low R.V.P. gasoline and is not accompanied by the statement required in paragraph (A)(5) of this rule.

(E) Low R.V.P. control area terminal operators shall maintain records on low R.V.P. gasoline containing all of the following information:

(1) The volume of each shipment or truckload of gasoline leaving the terminal.

(2) If the fuel is blended with ethanol, the type and percentage by volume of ethanol used in each shipment or truckload of gasoline leaving the terminal.

(3) The volume, name and address of the owner of every shipment of gasoline leaving the terminal and a statement indicating that the gasoline has an R.V.P. of 7.8 P.S.I. or less.

(4) The destination of each tank truck sale or batch of gasoline.

(5) The date of the sale or transfer of every shipment of gasoline leaving the terminal.

(6) The results of any tests for R.V.P. of the gasoline sold or transferred and who performed the tests.

(F) Each retailer and each wholesale purchaser-consumer within a low R.V.P. control area shall maintain all of the following records:

(1) The name and address of the person from whom each shipment of gasoline was purchased, and the date on which each shipment was received.

(2) A statement indicating that the gasoline has an R.V.P. of 7.8 P.S.I. or less.

(G) Each person in the gasoline distribution network shall maintain records containing compliance information as required in this rule. These records shall be retained by the regulated parties for at least two years from the date of creation or receipt of the records and shall be kept on site for a minimum of ninety days. For the remainder of the retention period, the records may be kept at a centralized location within the state of Ohio.

Effective: 01/16/2006

R.C. 119.032 review dates: 10/28/2005 and 01/16/2011

CERTIFIED ELECTRONICALLY
Certification

01/05/2006
Date

Promulgated Under: 119.03
Statutory Authority: ORC 3704.03(E)
Rule Amplifies: ORC 3704.03(A) and ORC 3704.03(E)
Prior Effective Dates: 11/8/1994

3745-72-05 **Liability.**

(A) Except as provided in rule 3745-72-07 of the Administrative Code, a violation of paragraph (A) of rule 3745-72-03 of the Administrative Code by a carrier, whose gasoline is in a transport vehicle, storage vessel, or elsewhere at the facility, shall be deemed a violation for all of the following parties:

(1) The refiner at whose refinery the gasoline was produced or the importer at whose import facility the gasoline was imported, except as provided in paragraph (A)(1) of rule 3745-72-06 of the Administrative Code.

(2) The distributor, except as provided in paragraph (A)(2) of rule 3745-72-06 of the Administrative Code.

(3) The ethanol blender at whose ethanol blending plant the gasoline was blended, except as provided in paragraph (A)(3) of rule 3745-72-06 of the Administrative Code.

(4) The carrier(s) who previously transported the gasoline to a facility in the gasoline distribution network, except as provided in paragraph (A)(4) of rule 3745-72-06 of the Administrative Code.

(B) Except as provided in rule 3745-72-07 of the Administrative Code, a violation of paragraph (A) of rule 3745-72-03 of the Administrative Code by a distributor who is or is not operating under the corporate, trade, or brand name of a gasoline refiner or any of its marketing subsidiaries shall be deemed a violation for all of the following parties:

(1) The refiner at whose refinery the gasoline was produced or the importer at whose import facility the gasoline was imported, except as provided in paragraph (A)(1) of rule 3745-72-06 of the Administrative Code.

(2) The distributor, except as provided, in paragraph (A)(2) of rule 3745-72-06 of the Administrative Code.

(3) The carrier(s) who previously transported the gasoline to a facility in the gasoline distribution network, except as provided in paragraph (A)(4) of rule 3745-72-06 of the Administrative Code.

(C) Except as provided in rule 3745-72-07 of the Administrative Code, a violation of paragraph (A) of rule 3745-72-03 of the Administrative Code by an ethanol blender who is or is not operating under the corporate, trade, or brand name of a gasoline refiner or any of its marketing subsidiaries shall be deemed a violation for all of the following parties:

(1) The refiner at whose refinery the gasoline was produced or the importer at whose import facility the gasoline was imported, except as provided in paragraph (A)(1) rule 3745-72-06 of the Administrative Code.

(2) The distributor, except as provided in paragraph (A)(2) rule 3745-72-06 of the Administrative Code.

(3) The ethanol blender, except as provided in paragraph (A)(3) of rule 3745-72-06 of the Administrative Code.

(4) The carrier(s) who previously transported the gasoline to a facility in the gasoline distribution network, except as provided in paragraph (A)(4) rule 3745-72-06 of the Administrative Code.

(D) Except as provided in rule 3745-72-07 of the Administrative Code, a violation of paragraph (A) of rule 3745-72-03 of the Administrative Code by a retailer or wholesale purchaser-consumer who sells gasoline under the corporate, trade, or brand name of a gasoline refiner or any of its marketing subsidiaries shall be deemed a violation for all of the following parties:

(1) The refiner at whose refinery the gasoline was produced or the importer at whose import facility the gasoline was imported, except as provided in paragraph (A)(1) of rule 3745-72-06 of the Administrative Code.

(2) The distributor, except as provided in paragraph (A)(2) of rule 3745-72-06 of the Administrative Code.

(3) The ethanol blender at whose ethanol blending plant the gasoline was blended, except as provided in paragraph (A)(3) of rule 3745-72-06 of the Administrative Code.

(4) The retailer or wholesale purchaser-consumer, except as provided in paragraph (A)(5) of rule 3745-72-06 of the Administrative Code.

(5) The carrier who previously transported the gasoline to a facility in the gasoline distribution network, except as provided in paragraph (A)(4) of rule 3745-72-06 of the Administrative Code.

(E) Except as provided in rule 3745-72-07 of the Administrative Code, a violation of paragraph (A) of rule 3745-72-03 of the Administrative Code by a retailer or wholesale purchaser-consumer who is not operating under corporate, trade, or brand name of a gasoline refiner or any of its marketing subsidiaries shall be deemed a violation for the following associated parties:

(1) The refiner at whose refinery the gasoline was produced or the importer at whose import facility the gasoline was imported, except as provided in paragraph (A)(1) of rule 3745-72-06 of the Administrative Code.

(2) The distributor, except as provided in paragraph (A)(2) of rule 3745-72-06 of the Administrative Code.

(3) The ethanol blender at whose ethanol blending plant the gasoline was blended, except as provided in paragraph (A)(3) rule 3745-72-06 of the Administrative Code.

(4) The retailer or wholesale purchaser-consumer, except as provided in paragraph (A)(5) of rule 3745-72-06 of the Administrative Code.

(5) The carrier(s) who previously transported the gasoline to a facility in the gasoline distribution network, except as provided in paragraph (A)(4) of rule 3745-72-06 of the Administrative Code.

Effective: 05/12/2011

R.C. 119.032 review dates: 01/03/2011 and 08/04/2015

CERTIFIED ELECTRONICALLY
Certification

05/02/2011
Date

Promulgated Under: 119.03
Statutory Authority: 3704.03(E)
Rule Amplifies: 3704.03(A), 3704.03(E)
Prior Effective Dates: 11/08/94, 1/16/06

3745-72-06 **Defenses.**

(A) In the event that a shipment of gasoline does not meet the requirements of paragraph (A) of rule 3745-72-03 of the Administrative Code, except as provided for in rule 3745-72-07 of the Administrative Code, a gasoline refiner, importer, distributor, reseller, ethanol blender or carrier shall not be deemed in violation if it can be demonstrated that:

(1) For refiners and importers:

(a) That the violation was not caused by the refiner/importer, the refiner/importer's employee, or the refiner/importer's agent; and

(b) Test results, performed in accordance with the sampling and testing methodologies in rule 3745-72-08 of the Administrative Code, demonstrate that the gasoline was in compliance with the rules of this chapter when it was delivered to the next party in the distribution system.

(2) For distributors:

(a) That the violation was not caused by the distributor, the distributor's employee, or the distributor's agent;

(b) Bills of lading, invoices, delivery tickets, loading tickets, or other documents from the refiner at whose refinery the gasoline was produced, the importer at whose facility the gasoline was imported, or the carrier, reseller, or distributor from whom the gasoline was received, represent to the distributor that the gasoline was in compliance with the rules of this chapter when delivered to the distributor; and

(c) The distributor provides evidence of an oversight program conducted by the distributor such as periodic sampling and testing of gasoline for monitoring the R.V.P. of gasoline that the distributor sells, supplies, offers for sale or supply, or transports to the next party in the distribution system.

(3) For ethanol blenders:

(a) That the violation was not caused by the ethanol blender, the ethanol blender's employee, or the ethanol blender's agent:

(b) Bills of lading, invoices, delivery tickets, loading tickets, or other documents from the refiner at whose refinery the gasoline was produced, the importer at whose facility the gasoline was imported, or the carrier, reseller, or distributor from whom the gasoline was received, represent to the ethanol

blender that the gasoline to which ethanol was added was in compliance with the rules of this chapter when delivered to the ethanol blender;

(c) The ethanol blender provides evidence of an oversight program conducted by the ethanol blender such as periodic sampling and testing of gasoline for monitoring the R.V.P. of gasoline that the ethanol blender sells, supplies, offers for sale or supply, or transports; and

(d) The ethanol blender provides evidence that the gasoline determined to be in violation contained no more than ten per cent ethanol, by volume, when it was delivered to the next party in the distribution system.

(4) For carriers:

(a) That the violation was not caused by the carrier, the carrier's employee, or the carrier's agent;

(b) Bills of lading, invoices, delivery tickets, loading tickets, or other documents from the refiner at whose refinery the gasoline was produced, the importer at whose facility the gasoline was imported, or the carrier, reseller, or distributor from whom the gasoline was received, represent to the carrier that the gasoline was in compliance with the rules of this chapter when delivered to the carrier; and

(c) The carrier provides evidence of an oversight program conducted by the carrier such as periodic sampling and testing of incoming gasoline for monitoring the R.V.P. of gasoline stored or transported by that carrier to the next party in the distribution system.

(5) For retailers or wholesale purchaser-consumers:

(a) That the violation was not caused the retailer/wholesale purchaser-consumer, the retailer/wholesale purchaser-consumer's employee, or the retailer/wholesale purchaser-consumer's agent; and

(b) Bills of lading, invoices, delivery tickets, loading tickets, or other documents from the refiner at whose refinery the gasoline was produced, the importer at whose facility the gasoline was imported, or the carrier, reseller, or distributor from whom the gasoline was received, represent to the retailer or wholesale purchaser-consumer that the gasoline was in compliance with the rules of this chapter when delivered to the retailer or wholesale purchaser-consumer.

Effective: 05/12/2011

R.C. 119.032 review dates: 01/03/2011 and 08/04/2015

CERTIFIED ELECTRONICALLY
Certification

05/02/2011
Date

Promulgated Under: 119.03
Statutory Authority: 3704.03(E)
Rule Amplifies: 3704.03(A), 3704.03(E)
Prior Effective Dates: 11/08/94, 1/16/06

3745-72-07 **Special provisions for alcohol blends.**

Comment: For dates of non-regulatory government publications, publications of recognized organizations and associations, federal rules, and federal statutory provisions referenced in this rule, see the last paragraph of rule 3745-72-02 of the Administrative Code titled "Incorporation by reference."

(A) Gasoline containing ethanol may exceed the R.V.P. limit specified in paragraph (A) of rule 3745-72-03 of the Administrative Code by no more than one P.S.I. if the gasoline meets all of the following requirements:

(1) The gasoline must contain denatured, anhydrous ethanol.

(2) The concentration of the anhydrous ethanol, excluding the required denaturing agent, must be at least nine per cent and no more than ten per cent, by volume, of the gasoline.

(3) The ethanol content of the gasoline shall be determined by use of one of the testing methodologies specified in 40 CFR 80.8. The maximum ethanol content of gasoline shall not exceed any applicable waiver conditions under section 211(f)(4) of the Clean Air Act.

(B) Each invoice, loading ticket, bill of lading, delivery ticket, and other document that accompanies a shipment of gasoline containing ethanol shall contain a statement that the gasoline being shipped contains ethanol and shall list the volume percentage of ethanol in that gasoline.

Effective: 01/16/2006

R.C. 119.032 review dates: 10/28/2005 and 01/16/2011

CERTIFIED ELECTRONICALLY
Certification

01/05/2006
Date

Promulgated Under: 119.03
Statutory Authority: ORC 3704.03(E)
Rule Amplifies: ORC 3704.03(A) and ORC 3704.03(E)
Prior Effective Dates: 11/08/1994

3745-72-08 **Quality assurance and test methods.**

Comment: For dates of non-regulatory government publications, publications of recognized organizations and associations, federal rules, and federal statutory provisions referenced in this rule, see the last paragraph of rule 3745-72-02 of the Administrative Code titled "Incorporation by reference."

(A) Any sampling or testing of gasoline required by this chapter shall be accomplished as follows:

(1) Sampling of gasoline for the purpose of determining compliance with paragraph (A) of rule 3745-72-03 of the Administrative Code, except as provided in rule 3745-72-07 of the Administrative Code, shall be conducted in accordance with 40 CFR 80.46.

(2) Testing of gasoline for the purpose of determining compliance with paragraph (A) of rule 3745-72-03 of the Administrative Code, except as provided in rule 3745-72-07 of the Administrative Code, shall be conducted in accordance with 40 CFR 80.8. The R.V.P. value determined by such testing for the purpose of verifying compliance with this chapter shall not exceed 0.3 P.S.I. above the allowable value of 7.8 P.S.I. for the low R.V.P. gasoline or 8.8 P.S.I. for the gasoline which meets the requirements of rule 3745-72-07 of the Administrative Code.

(3) Alternative sampling or test methods may be used if approved in advance in writing by the Ohio environmental protection agency and the United States environmental protection agency.

Effective: 01/16/2006

R.C. 119.032 review dates: 10/28/2005 and 01/16/2011

CERTIFIED ELECTRONICALLY
Certification

01/05/2006
Date

Promulgated Under: 119.03
Statutory Authority: ORC 3704.03(E)
Rule Amplifies: ORC 3704.03(A) and ORC 3704.03(E)
Prior Effective Dates: 11/08/1994

Chapter 3745-73: Total Reduced Sulfur

Contact: Dana Thompson 614-644-3701
Dana.Thompson@epa.ohio.gov

3745-73-01 **Definitions and reference to materials.**

The definitions in this rule shall apply to this chapter.

(A) "Black liquor" means the spent cooking liquor, composed of a mixture of dissolved lignins and inorganic compounds, which remains after the digestion of wood chips in the Kraft pulping process.

(B) "Black liquor solids" means the dry solids which enter the recovery furnace in the black liquor.

(C) "Condensate stripper system" means a system in which total reduced sulfur gasses, partially dissolved in the digester and multiple effect evaporator off-gas condensate, are stripped by means of a countercurrent flow of air or steam in multi-stage columns.

(D) "Digester system" means any continuous or batch process in which white liquor is used to cook the wood pulp, and includes any associated flash tanks, blow tanks, chip steamers and condensors.

(E) "Kraft pulp mill" means a wood pulping mill which uses an alkaline sulfide solution containing sodium hydroxide and sodium sulfide (white liquor) in the wood digesting process.

(F) "Lime kiln" means a unit used to calcine calcium carbonate, commonly known as "lime mud," into calcium oxide, commonly known as "quicklime."

(G) "Multiple-effect evaporator system" means the multiple-effect evaporator including any associated condensors and hotwells used to concentrate the black liquor.

(H) "Recovery furnace" means a straight Kraft recovery furnace including any direct contact evaporators, designed to recover chemicals necessary for the pulp cooking process through the combustion of black liquor containing less than seven per cent liquor such as neutral sulfite semichemical from a soda-based semichemical pulping process on a quarterly basis.

(I) "Smelt dissolving tank" means a vessel used for dissolving smelt from a recovery furnace.

(J) "Soda-based semichemical pulping operation" means any operation in which pulp is produced from wood by cooking or digesting wood chips in a soda-based semichemical such as neutral sulfite semichemical.

(K) "Total reduced sulfur" means the sum of the sulfur compounds hydrogen sulfide, methyl mercaptan, dimethyl sulfide and dimethyl disulfide, that are released during

the Kraft pulping operation and measured by methods specified in rule 3745-73-04 of the Administrative Code.

(L) Reference to materials. This chapter includes references to certain matter or materials. The text of the referenced material is not included in the rules contained in this chapter. Information on the availability of the referenced materials as well as the date of, and/or the particular edition or version of the material is included in this rule. For materials subject to change, only the specific versions specified in this rule are referenced. Material is referenced as it exists on the effective date of this rule. Except for subsequent annual publication of existing (unmodified) Code of Federal Regulation compilations, any amendment or revision to a referenced document is not applicable unless and until this rule has been amended to specify the new dates.

(1) Availability. The referenced materials are available as follows:

Code of Federal Regulations (CFR). Information and copies may be obtained by writing to: "Superintendent of Documents, Attn: New Orders, P. O. Box 371954, Pittsburgh, PA 15250-7954." The full text of the CFR is also available in electronic format at www.access.gpo.gov/. The CFR compilations are also available for inspection and copying at most public libraries and "The State Library of Ohio."

(2) Referenced materials:

40 CFR Part 60, Appendix A; "Test Methods 1 thru 29;" as published in the July 1, 2010 Code of Federal Regulations.

Effective: 02/11/2011

R.C. 119.032 review dates: 11/18/2010 and 02/11/2016

CERTIFIED ELECTRONICALLY
Certification

02/01/2011
Date

Promulgated Under: 119.03
Statutory Authority: 3704.03(E)
Rule Amplifies: 3704.03(A), 3704.03(E)
Prior Effective Dates: 11/1/84, 1/3/91, 3/20/06

3745-73-02 **Certification and compliance time schedules.**

(A) All compliance times and other deadlines set forth in paragraph (C) of this rule shall be measured from November 1, 1984.

(B) No later than February 1, 1985, any owner or operator of any air contaminant source subject to rule 3745-73-03 of the Administrative Code shall either:

(1) Certify in writing to the director that the source is in compliance with all requirements of rule 3745-73-03 of the Administrative Code. The certification shall include: description of the equipment, the Ohio environmental protection agency permit application number (if assigned), all necessary data and calculations necessary to confirm the compliance status, and an application for a permit to operate the source in accordance with rule 3745-35-02 of the Administrative Code if the sources does not possess an effective permit; or

(2) Submit an application for a permit-to-operate or an application for modification of a permit-to-operate in accordance with rule 3745-35-02 of the Administrative Code. The application shall include a compliance program and time schedule which will bring the source into compliance with all the requirements of this rule and rule 3745-73-03 of the Administrative Code as expeditiously as practicable but in no event later than the dates specified in paragraph (C) of this rule, and shall identify all reasonable interim control measures.

(C) Any owner or operator of an air contaminant source in violation of the limitations specified in rule 3745-73-03 of the Administrative Code shall comply with the requirements as expeditiously as practicable, but in no event later than the dates specified in this paragraph:

(1) Owners or operators of any recovery furnace in violation of paragraph (A)(1) of the rule 3745-73-03 of the Administrative Code shall achieve final compliance by March 1, 1988.

(2) Owners or operators of any digester system in violation of paragraph (A)(2) of rule 3745-73-03 of the Administrative Code shall achieve final compliance by July 1, 1986.

(3) Owners or operators of any multiple-effect evaporator system in violation of paragraph (A)(3) of rule 3745-73-03 of the Administrative Code shall achieve final compliance by July 1, 1986.

(4) Owners or operators of any lime kiln in violation of paragraph (A)(4) of rule 3745-73-03 of the Administrative Code shall achieve final compliance by November 1, 1986.

(5) Owners or operators of any condensate stripper system in violation of paragraph (A)(5) of rule 3745-73-03 of the Administrative Code shall achieve final compliance by July 1, 1986.

(6) Owners or operators of any smelt dissolving tank in violation of paragraph (A)(6) of rule 3745-73-03 of the Administrative Code shall achieve final compliance by July 1, 1986.

(7) The director may extend the final compliance obligation for any facilities within an existing Kraft pulp mill, for a period not to exceed four years after the effective date of the "Ohio State Implementation Plan" for the control of total reduced sulfur emissions, upon a showing that because of the limited remaining useful life of such facilities, they will be replaced or modified in a manner which makes them subject to federal new source performance standards.

(8) The director may modify the requirements of rule 3745-73-03 of the Administrative Code as those requirements apply to a facility, upon a showing that compliance with a requirement within the prescribed time is technically infeasible, economically unreasonable, or impossible because of conditions beyond the control of the applicant. Any such determination by the director shall be based upon consideration of the remaining useful life of the facility and such other factors as the director deems appropriate.

Replaces: 3745-73-02

Effective: 02/11/2011

R.C. 119.032 review dates: 02/11/2016

CERTIFIED ELECTRONICALLY
Certification

02/01/2011
Date

Promulgated Under: 119.03
Statutory Authority: 3704.03(E)
Rule Amplifies: 3704.03(A), 3704.03(E)
Prior Effective Dates: 11/1/84, 1/3/91, 3/20/06

3745-73-03 **General emission limits.**

(A) No owner or operator of any Kraft pulp mill shall cause or permit the emission of total reduced sulfur from the following sources to exceed the following specified limits or federal new source performance standards, whichever is less stringent, as measured on a twelve-hour average basis:

(1) Recovery furnaces: five parts per million on a dry basis, and as a twelve-hour average, corrected to eight per cent oxygen by volume.

(2) Digester systems: five parts per million on a dry basis and as a twelve-hour average, corrected to ten per cent oxygen by volume.

(3) Multiple-effect evaporator systems: five parts per million on a dry basis and as a twelve-hour average, corrected to ten per cent oxygen by volume.

(4) Lime kilns:

(a) Twenty parts per million on a dry basis and as a twelve-hour average, corrected to ten per cent oxygen by volume for lime kilns operated with cold-end temperatures in excess of five hundred degrees Fahrenheit or having a length-to-diameter ratio of less than twenty to one.

(b) Forty parts per million on a dry basis and as a twelve-hour average, corrected to ten per cent oxygen by volume, for lime kilns operated with cold-end temperatures of less than five hundred degrees Fahrenheit or having a length-to-diameter ratio of less than twenty to one.

(5) Condensate stripper systems: five parts per million on a dry basis and as a twelve-hour average, corrected to ten per cent oxygen by volume.

(6) Smelt dissolving tanks: 0.0084 grams per kilogram of black liquor solids (dry weight).

(B) No owner or operator of any Kraft pulp mill shall cause or permit the emission of total reduced sulfur from any source not regulated by paragraph (A) of this rule, but which is used as a point of incineration of reduced sulfur emissions from a source regulated by paragraph (A) of this rule, to exceed a maximum of five parts per million on a dry basis and as a twelve-hour average, corrected to eight per cent oxygen.

(C) Emissions from recovery furnaces which exceed the emission limits contained in this rule, from sources on which construction or modification commenced on or before September 24, 1976, shall not be considered excess emissions if: (1) not more than one per cent of all twelve-hour averages of total reduced sulfur per quarter exceed

the standard specified in paragraph (A)(1) of this rule; (2) proper operation and maintenance have been performed; and (3) there have been no start-ups, shutdowns, or malfunctions.

(D) Emissions from lime kilns which exceed the emission limits contained in this rule, from sources on which construction or modification commenced on or before September 24, 1976, shall not be considered excess emissions if: (1) not more than two per cent of all twelve-hour averages of total reduced sulfur per quarter exceed the standard specified in paragraph (A)(4) of this rule; (2) proper operation and maintenance have been performed; and (3) there have been no shutdowns or malfunctions.

Effective: 02/11/2011

R.C. 119.032 review dates: 11/18/2010 and 02/11/2016

CERTIFIED ELECTRONICALLY
Certification

02/01/2011
Date

Promulgated Under: 119.03
Statutory Authority: 3704.03(E)
Rule Amplifies: 3704.03(A), 3704.03(E)
Prior Effective Dates: 11/1/84, 1/3/91, 3/20/06

3745-73-04 **Emission test methods and reporting requirements.**

[Comment: For dates of non-regulatory government publications, publications of recognized organizations and associations, federal rules, and federal statutory provisions referenced in this rule, see paragraph (L) of rule 3745-73-01 of the Administrative Code titled "Reference to materials."]

(A) Compliance with any applicable emission limit for total reduced sulfur as specified in rule 3745-73-03 of the Administrative Code shall be determined according to either:

(1) One of the reference methods described in 40 CFR Part 60, Appendix A; or

(2) Any method determined by the director to be equivalent to paragraph (A)(1) of this rule.

(B) In lieu of the procedure specified in paragraph (A) of this rule, the owner or operator of a source that is subject to this chapter may elect to monitor compliance through use of a continuous monitor. The continuous monitor shall operate at least seventy per cent of the time during any calendar quarter. In the event the monitor malfunctions and is unusable for more than twenty-five per cent of the time during a calendar quarter, the director shall be notified in writing specifying the cause of the monitor malfunction, actions being taken to correct the malfunction and the estimated time before the monitor will be functional.

Effective: 02/11/2011

R.C. 119.032 review dates: 11/18/2010 and 02/11/2016

CERTIFIED ELECTRONICALLY
Certification

02/01/2011
Date

Promulgated Under: 119.03
Statutory Authority: 3704.03(E)
Rule Amplifies: 3704.03(A), 3704.03(E)
Prior Effective Dates: 11/1/84, 1/3/91, 3/20/06

Chapter 3745-74: Acrylonitrile Services

Rules in Chapter 3745-74 have been repealed as of 10/31/96

Chapter 3745-75: Infectious Waste Incinerator Limitations

Contact: Dana Thompson 614-644-3698
Dana.Thompson@epa.ohio.gov

3745-75-01 **Applicability, definitions, and reference to materials.**

[Comment: For dates of non-regulatory government publications, publications of recognized organizations and associations, federal rules, and federal statutory provisions referenced in this rule, see the last paragraph of this rule titled "Reference to materials."]

(A) Except as otherwise provided in paragraph (B) of this rule, the definitions in rule 3745-15-01 of the Administrative Code shall apply to this chapter.

(B) For the purpose of Chapter 3745-75 of the Administrative Code:

(1) "Batch incinerator" means an incinerator which is loaded and undergoes a cycle of combustion, ash burndown, cooling-off and ash removal, prior to being loaded again.

(2) "Biologicals" means preparations made from living organisms and their products, including but not limited to vaccines and cultures intended for use in diagnosing, immunizing, or treating humans or animals or in research pertaining thereto.

(3) "Body fluids" means liquid emanating or derived from humans and limited to blood; dialysate; amniotic, cerebrospinal, synovial, pleural, peritoneal and pericardial fluids; and semen and vaginal secretions.

(4) "Bypass stack" means a device used for discharging combustion gases to avoid severe damage to the air pollution control device or other equipment.

(5) "Chemotherapeutic waste" means waste material resulting from the production or use of antineoplastic agents used for the purpose of stopping or reversing the growth of malignant cells.

(6) "Co-fired combustor" means a unit combusting hospital waste and/or medical/infectious waste with other fuels or wastes (e.g., coal, municipal solid waste) and subject to an enforceable requirement limiting the unit to combusting a fuel feed stream, ten per cent of the weight of which is comprised, in aggregate, of hospital waste and medical/infectious waste as measured on a calendar quarter basis. For the purpose of this definition, pathological waste, chemotherapeutic waste, and low-level radioactive waste are considered "other" wastes when calculating the percentage of hospital waste and medical/infectious waste combusted.

(7) "Continuous duty incinerator" means an incinerator of either a multiple chamber or controlled-air design into which waste can be charged at periodic intervals and from which ash can be removed at periodic intervals, without an ash burndown and cooling-off cycle.

(8) "Continuous temperature recorder" means a device, which uses a temperature sensor (such as a thermocouple), that is part of an instrument which continuously monitors and records the temperature at a specific location in an air pollution source.

(9) "Dioxin" means total tetra- through octachlorinated dibenzo-p-dioxins (PCDDs), as measured by USEPA method 23.

(10) "Dry scrubber" means an add-on air pollution control system that injects dry alkaline sorbent (dry injection) or sprays an alkaline sorbent (spray dryer) to react with and neutralize acid gases in the HMIWI exhaust stream forming a dry powdery material.

(11) "Fabric filter" or "baghouse" means an add-on pollution control system that removes particulate matter (PM) and nonvaporous metals emissions by passing flue gas through filter bags.

(12) "Facilities manager" means the individual in charge of purchasing, maintaining, and operating the HMIWI or the owner's or operator's representative responsible for the management of the HMIWI. Alternative titles may include director of facilities or vice president of support services.

(13) "Furan" means total tetra- through octachlorinated dibenzofurans (PCDFs), as measured by USEPA method 23.

(14) "High-air phase" means the stage of the batch operating cycle when the primary chamber reaches and maintains maximum operating temperatures.

(15) "Hospital" means any facility which has an organized medical staff, maintains at least six inpatient beds, and where the primary function of the institution is to provide diagnostic and therapeutic patient services and continuous nursing primarily to human inpatients who are not related and who stay on average in excess of twenty-four hours per admission. This definition does not include facilities maintained for the sole purpose of providing nursing or convalescent care to human patients who generally are not acutely ill but who require continued medical supervision.

(16) "Hospital waste" means discards generated at a hospital, except unused items returned to the manufacturer. The definition of hospital waste does not include human corpses, remains, and anatomical parts that are intended for interment or cremation.

(17) "Hospital waste incinerator" means any device used to provide the combustion of hospital waste.

(18) "Hospital/medical/infectious waste incinerator" or "HMIWI" or "HMIWI unit" means any device that combusts any amount of hospital waste and/or medical/infectious waste.

(19) "Infectious agent" means a type of microorganism, helminth or virus that causes, or significantly contributes to the cause of, increased morbidity or mortality of human beings.

(20) "Intermittent feed incinerator" means an incinerator of either a multiple chamber or controlled-air design into which waste can be charged at periodic intervals and from which ash is removed after a burndown and cooling-off cycle.

(21) "Large HMIWI" means a continuous duty or intermittent feed HMIWI whose maximum charge rate is more than five hundred pounds per hour, or a batch HMIWI whose maximum charge rate is more than four thousand pounds per day.

(22) "Low-level radioactive waste" means waste material which contains radioactive nuclides emitting primarily beta or gamma radiation, or both, in concentrations or quantities that exceed applicable federal or state standards for unrestricted release. Low-level radioactive waste is not high-level radioactive waste, spent nuclear fuel, or byproduct material as defined by the Atomic Energy Act of 1954 (42 USC 2014(e)(2)).

(23) "Malfunction" means any sudden, infrequent, and not reasonably preventable failure of air pollution control equipment, process equipment, or a process to operate in a normal or usual manner. Failures that are caused, in part, by poor maintenance or careless operation are not malfunctions. During periods of malfunction the operator shall operate within established parameters as much as possible, and monitoring of all applicable operating parameters shall continue until all waste has been combusted or until the malfunction ceases, whichever comes first.

(24) "Maximum charge rate" means

(a) For continuous-duty and intermittent-feed incinerators, one hundred ten per cent of the lowest three-hour average charge rate measured during the most recent performance test demonstrating compliance with all applicable emission limits.

(b) For batch incinerators, one hundred ten per cent of the lowest daily charge rate measured during the most recent performance test demonstrating compliance with all applicable emission limits.

(25) "Maximum fabric filter inlet temperature" means one hundred ten per cent on the absolute scale of the lowest three-hour average temperature at the inlet to the fabric filter (taken, at a minimum, once every minute) measured during the most recent performance test demonstrating compliance with the dioxin/furan emission limit.

(26) "Maximum flue gas temperature" means one hundred ten per cent on the absolute scale of the lowest three-hour average temperature at the outlet from the wet scrubber (taken, at a minimum, once every minute) measured during the most recent performance test demonstrating compliance with the mercury emission limit.

(27) "Medical/infectious wastes" include all of the following substances or categories of substances:

(a) Cultures and stocks of infectious agents and associated biologicals, including, without limitation, specimen cultures, cultures and stocks of infectious agents, wastes from production of biologicals, discarded live and attenuated vaccines, and culture dishes and devices used to transfer, inoculate, and mix cultures;

(b) Laboratory wastes that were, or are likely to have been, in contact with infectious agents that may present a substantial threat to public health if improperly managed;

(c) Human pathological waste, including tissues, organs, and body parts and body fluids that are removed during surgery or autopsy, or other medical procedures, and specimens of body fluids and their containers;

(d) Waste materials from the rooms of humans, or the enclosures of animals, that have been isolated because of diagnosed communicable disease that are likely to transmit infectious agents. Also included are waste materials from the rooms of patients who have been placed on blood and body fluid precautions under the universal precaution system established by the "Centers for Disease Control" in the public health service of the United States department of health and human services, if specific wastes generated under the universal precautions system have been identified as infectious wastes by rules referred to in paragraph (B)(27)(i) of this rule;

(e) Human blood and blood products, including:

(i) Liquid waste human blood;

(ii) Products of blood;

(iii) Items saturated and/or dripping with human blood; and

(iv) Items that were saturated and/or dripping with human blood that are now caked with dried human blood; including serum, plasma, and other blood components, and their containers, which were used or intended for use in either patient care, testing and laboratory analysis or the development of pharmaceuticals. Intravenous bags are also included in this category. The category does not include patient care waste such as bandages or disposable gowns that are lightly soiled with blood or

other body fluids, unless such wastes are soiled to the extent that the generator of the wastes determined that they should be managed as infectious wastes;

(f) Contaminated carcasses, body parts, and bedding of animals that were intentionally exposed to infectious agents from zoonotic or human diseases during research, production of biologicals, or testing of pharmaceutical products, and carcasses and bedding of animals otherwise infected by zoonotic or infectious agents that may present a substantial threat to public health if improperly managed;

(g) Sharp wastes used in the treatment, diagnosis, or inoculation of human beings or animals or that have, or are likely to have, come in contact with infectious agents in medical, research or industrial laboratories, including, but not limited to, hypodermic needles and syringes, scalpel blades, and glass articles whether broken or unbroken;

(h) Unused sharps including unused, discarded hypodermic needles, suture needles, syringes and scalpel blades;

(i) Any other waste materials generated in the diagnosis, treatment or immunization of human beings or animals, in research pertaining thereto or in the production or testing of biological materials, that the public health council created in section 3701.33 of the Revised Code, by rules adopted in accordance with Chapter 119. of the Revised Code, identifies as infectious wastes after determining that the wastes present a substantial threat to human health when improperly managed because they are contaminated with, or are likely to be contaminated with, infectious agents; and

(j) Any other waste materials the generator designates as infectious waste.

(28) "Medical/infectious waste incinerator" means any device used to provide the combustion of medical/infectious waste.

(29) "Medium HMIWI" means a continuous duty or intermittent feed HMIWI whose maximum charge rate is more than two hundred pounds per hour and less than or equal to five hundred pounds per hour, or a batch HMIWI whose maximum charge rate is more than one thousand six hundred pounds per day and less than or equal to four thousand pounds per day.

(30) "Minimum dioxin/furan sorbent flow rate" means ninety per cent of the highest three-hour average dioxin/furan sorbent flow rate (taken, at a minimum, once every hour) measured during the most recent performance test demonstrating compliance with the dioxin/furan emission limit.

(31) "Minimum horsepower or amperage" means ninety per cent of the highest three-hour average horsepower or amperage to the wet scrubber (taken, at a minimum,

once every minute) measured during the most recent performance test demonstrating compliance with the applicable emission limits.

(32) "Minimum hydrogen chloride sorbent flow rate" means ninety per cent of the highest three-hour average hydrogen chloride sorbent flow rate (taken, at a minimum, once every hour) measured during the most recent performance test demonstrating compliance with the hydrogen chloride emission limit.

(33) "Minimum mercury sorbent flow rate" means ninety per cent of the highest three-hour average mercury sorbent flow rate (taken, at a minimum, once every hour) measured during the most recent performance test demonstrating compliance with the mercury emission limit.

(34) "Minimum pressure drop across the wet scrubber" means ninety per cent of the highest three-hour average pressure drop across the wet scrubber particulate-matter control device (taken, at a minimum, once every minute) measured during the most recent performance test demonstrating compliance with the particulate-matter emission limit.

(35) "Minimum scrubber liquor flow rate" means ninety per cent of the highest three-hour average liquor flow rate at the inlet to the wet scrubber (taken, at a minimum, once every minute) measured during the most recent performance test demonstrating compliance with all applicable emission limits.

(36) "Minimum scrubber liquor pH" means ninety per cent of the highest three-hour average liquor pH at the inlet to the wet scrubber (taken, at a minimum, once every minute) measured during the most recent performance test demonstrating compliance with the hydrogen chloride emission limit.

(37) "Minimum secondary chamber temperature" means ninety per cent on the absolute scale of the highest three-hour average secondary chamber temperature (taken, at a minimum, once every minute) measured during the most recent performance test demonstrating compliance with the particulate matter, carbon monoxide, and dioxin/furan limits.

(38) "Modification" means any change to an HMIWI such that

(a) The cumulative costs of the modifications, over the life of the unit, exceed fifty per cent of the original cost of the construction and installation of the unit (not including the cost of any land purchased in connection with such construction or installation) updated to current costs, or

(b) The change involves a physical change in or change in the method of operation of the unit which increases the amount of any air pollutant emitted by the unit for which standards have been established under Section 129 or Section 111 of the Clean Air Act.

(39) "Off-site facility" means a medical/infectious waste incinerator that burns any medical/infectious waste from a generator that is located off-site from the location of the medical/infectious waste incinerator.

(40) "Operating day" means a twenty-four hour period between twelve a.m. and the following midnight during which any amount of hospital waste or medical/infectious waste is combusted at any time in the HMIWI.

(41) "Operator" means the person with immediate responsibility for keeping the incinerator and related equipment within the proper operating range of temperature and emission rate, and assuring that overcharging or loading of prohibited materials does not occur. The term does not include those personnel whose responsibilities consist merely of loading waste into the incinerator, so long as such loading operation is subject to the knowledge and control of a properly qualified operator.

(42) "Pathological waste" means waste material consisting of only human or animal remains, anatomical parts, and/or tissue, the bags/containers used to collect and transport the waste material, and animal bedding if applicable.

(43) "Primary chamber" means the chamber in an HMIWI that receives waste material, in which the waste is ignited, and from which ash is removed.

(44) "Pyrolysis" means the endothermic gasification of hospital waste and/or medical/infectious waste using external energy.

(45) "Retention time" means the average time for gases to pass through a chamber. The retention time of the secondary chamber of an incinerator shall be calculated using the volume of the secondary chamber divided by the actual volumetric flow rate emitted from the secondary chamber at maximum operating temperature and burning rate.

(46) "Secondary chamber" means a component of the HMIWI that receives combustion gases from the primary chamber and in which the combustion process is completed.

(47) "Shutdown" means the period of time after all waste has been combusted in the primary chamber. For continuous HMIWI, shutdown shall commence no less than two hours after the last charge to the incinerator. For intermittent HMIWI, shutdown shall commence no less than four hours after the last charge to the incinerator. For batch HMIWI, shutdown shall commence no less than five hours after the high-air phase of combustion has been completed.

(48) "Small HMIWI" means a continuous duty or intermittent feed HMIWI whose maximum charge rate is less than or equal to two hundred pounds per hour, or a batch HMIWI whose maximum charge rate is less than or equal to one thousand six hundred pounds per day.

(49) "USEPA" means United States environmental protection agency.

(50) "Startup" means the period of time between the activation of the system and the first charge to the unit. For batch HMIWI, startup means the period of time between activation of the system and ignition of the waste.

(51) "Wet scrubber" means an add-on air pollution control device that utilizes an alkaline scrubbing liquor to collect particulate matter (including nonvaporous metals and condensed organics) and/or to absorb and neutralize acid gases.

(52) "Zoonotic agent" means a type of microorganism, helminth, or virus that causes disease in vertebrate animals and that is transmissible to human beings and causes or significantly contributes to the cause of increased morbidity or mortality of human beings.

(C) This chapter applies to the owner or operator of any medical/infectious or hospital waste incinerator except the following:

(1) Incinerators that burn infectious wastes generated by individuals for purposes of their own care or treatment that are disposed of with solid waste from the individual's residence.

(2) Crematories that only combust human remains and coffins.

(3) Veterinary clinics and animal shelters that only burn carcasses and bedding of animals not intentionally exposed to infectious agents during research, production of biological material, or testing of pharmaceutical products, unless the improper disposal of those materials would present a substantial threat to public health.

(4) Incinerators on which construction was commenced after June 20, 1996.

(5) Incinerators on which modification was commenced after March 16, 1998.

(6) Any combustor during periods in which only pathological waste, low-level radioactive waste, and/or chemotherapeutic waste are burned, provided the owner or operator

(a) Notifies the director and the USEPA of an exemption claim; and

(b) Keeps records on a calendar quarter basis of the periods of time when only pathological waste, low-level radioactive waste, and/or chemotherapeutic waste are burned.

[Note: a combustor exempted under this paragraph is subject to the requirements for pathological waste incinerators under Chapter 3745-105 of the Administrative Code.]

(7) Any co-fired combustor, provided the owner or operator

(a) Notifies the director and the USEPA of an exemption claim;

(b) Provides an estimate of the relative weight of hospital waste, medical/infectious waste, and other fuels and/or wastes to be combusted; and

(c) Keeps records on a calendar quarter basis of the weight of hospital waste and medical/infectious waste combusted, and the weight of all other fuels and wastes combusted at the co-fired combustor.

(8) Any combustor required to have a permit under section 3005 of the Solid Waste Disposal Act.

(9) Any combustor which meets the applicability requirements under 40 CFR Part 60, subpart Cb; 40 CFR Part 60, subpart Ea; or 40 CFR Part 60, subpart Eb (standards or guidelines for certain municipal waste combustors).

(10) Cement kilns.

(11) Any pyrolysis unit as defined by this rule.

(D) Reference to materials. This chapter includes references to certain matter or materials. The text of the referenced material is not included in the rules contained in this chapter. Information on the availability of the referenced materials as well as the date of, and/or the particular edition or version of the material is included in this rule. For materials subject to change, only the specific versions specified in this rule are referenced. Material is referenced as it exists on the effective date of this rule. Except for subsequent annual publication of existing (unmodified) Code of Federal Regulation compilations, any amendment or revision to a referenced document is not applicable unless and until this rule has been amended to specify the new dates.

(1) Availability. The referenced materials are available as follows:

(a) "An Ounce of Prevention: Waste Reduction Strategies for Health Care Facilities." Information and copies may be obtained from the American Hospital Association, Chicago, Illinois, 1993, AHA catalogue number 057007, ISBN 0-87258-673-5. The publication is also available on their website at: www.aha.org. Copies of this publication are also available for inspection and copying at most public libraries and "The State Library of Ohio."

(b) Clean Air Act. Information and copies may be obtained by writing to: "Superintendent of Documents, Attn: New Orders, PO Box 371954, Pittsburgh, PA 15250-7954." The full text of the Act as amended in 1990 is also available in electronic format at www.epa.gov/oar/caa/. A copy of the

Act is also available for inspection and copying at most public libraries and "The State Library of Ohio."

(c) Code of Federal Regulations. Information and copies may be obtained by writing to: "Superintendent of Documents, Attn: New Orders, PO Box 371954, Pittsburgh, PA 15250-7954." The full text of the CFR is also available in electronic format at www.access.gpo.gov/nara/cfr. The CFR compilations are also available for inspection and copying at most public libraries and "The State Library of Ohio."

(d) United States Code. Information and copies may be obtained by writing to: "Superintendent of Documents, Attn: New Orders, PO Box 371954, Pittsburgh, PA 15250-7954." The full text of the U.S.C. is also available in electronic format at www.access.gpo.gov/uscode/index.html. The U.S.C. compilations are also available for inspection and copying at most public libraries and "The State Library of Ohio."

(2) Referenced materials.

(a) 40 CFR 60.7; "Notification and record keeping;" as published in the July 1, 2008 Code of Federal Regulations.

(b) 40 CFR 60.13; "Monitoring requirements;" as published in the July 1, 2008 Code of Federal Regulations.

(c) 40 CFR Part 60; "Standards of Performance for New Stationary Sources;" as published in the July 1, 2008 Code of Federal Regulations.

(d) 40 CFR Part 60, Appendix A-4; "Test Methods 6 through 10B;" as published in the July 1, 2008 Code of Federal Regulations.

(e) 40 CFR Part 60, Appendix B; "Performance Specifications;" as published in the July 1, 2008 Code of Federal Regulations.

(f) 40 CFR Part 60, Appendix F; "Quality Assurance Procedures;" as published in the July 1, 2008 Code of Federal Regulations.

(g) 40 CFR Part 60, Subpart Cb; "Emission Guidelines and Compliance Times for Large Municipal Waste Combustors That Are Constructed on or Before September 20, 1994," as published in the July 1, 2008 Code of Federal Regulations.

(h) 40 CFR Part 60, Subpart Ea; "Standards of Performance for Municipal Waste Combustors for Which Construction is Commenced After December 20, 1989 and on or Before September 20, 1994," as published in the July 1, 2008 Code of Federal Regulations.

(i) 40 CFR Part 60, Subpart Eb; "Standards of Performance for Large Municipal Waste Combustors for Which Construction is Commenced After September 20, 1994 or for Which Modification or Reconstruction Is Commenced After June 19, 1996," as published in the July 1, 2008 Code of Federal Regulations.

(j) 40 CFR Part 60, Subpart Ec; "Standards of Performance for Hospital/Medical/Infectious Waste Incinerators for Which Construction is Commenced After June 20, 1996;" as published in the July 1, 2008 Code of Federal Regulations.

(k) 40 CFR Part 60, Subpart HHH; "Federal Plan Requirements for Hospital/Medical/Infectious Waste Incinerators Constructed on or Before June 20, 1996," as published in the July 1, 2008 Code of Federal Regulations.

(l) 40 CFR 62.14470; "When must I comply with this subpart if I plan to continue operation of my HMIWI?;" as published in the July 1, 2008 Code of Federal Regulations.

(m) 40 CFR 62.14471; "When must I comply with this subpart if I plan to shut down?;" as published in the July 1, 2008 Code of Federal Regulations.

(n) 42 USC 4012; "Definitions;" published January 2, 2006 in Supplement V of the 2000 Edition of the United States Code.

(o) "An Ounce of Prevention: Waste Reduction Strategies for Health Care Facilities;" as published April 1, 1993.

(p) Section 111 of the Clean Air Act; contained in 42 USC 7411; "Standards of performance for new stationary sources;" published January 2, 2006 in Supplement V of the 2000 Edition of the United States Code.

(q) Section 129 of the Clean Air Act; contained in 42 USC 7429; "Solid Waste Combustion;" published January 2, 2006 in Supplement V of the 2000 Edition of the United States Code.

(r) Section 3005 of the Solid Waste Disposal Act; contained in 42 USC 6925; "Permits for treatment, storage, or disposal of hazardous waste;" published January 2, 2006 in Supplement V of the 2000 Edition of the United States Code.

(s) USEPA method 1; "Sample and Velocity Traverses for Stationary Sources;" as contained in 40 CFR Part 60, Appendix A; as published in the July 1, 2008 Code of Federal Regulations.

(t) USEPA method 3; "Gas Analysis for the Determination of Dry Molecular Weight;" as contained in 40 CFR Part 60, Appendix; as published in the July 1, 2008 Code of Federal Regulations.

(u) USEPA method 3A; "Determination of Oxygen and Carbon Dioxide Concentrations in Emissions From Stationary Sources (Instrumental Analyzer Procedure);" as contained in 40 CFR Part 60, Appendix A; as published in the July 1, 2008 Code of Federal Regulations.

(v) USEPA method 3B; "Gas analysis for the determination of emission rate correction factor or excess air;" as contained in 40 CFR Part 60, Appendix A; as published in the July 1, 2008 Code of Federal Regulations.

(w) USEPA method 5; "Determination of Particulate Emissions From Stationary Sources;" as contained in 40 CFR Part 60, Appendix A; as published in the July 1, 2008 Code of Federal Regulations.

(x) USEPA method 9; "Visual Determination of the Opacity of Emissions from Stationary Sources;" as contained in 40 CFR Part 60, Appendix A; as published in the July 1, 2008 Code of Federal Regulations.

(y) USEPA method 10; "Determination of Carbon Monoxide Emissions From Stationary Sources;" as contained in 40 CFR Part 60, Appendix A; as published in the July 1, 2008 Code of Federal Regulations.

(z) USEPA method '10B;' "Determination of Carbon Monoxide Emissions From Stationary Sources;" as contained in 40 CFR Part 60, Appendix A as published in the July 1, 2008 Code of Federal Regulations.

(aa) USEPA method 23; "Determination of Polychlorinated Dibenzo-P-dioxins and Polychlorinated Dibenzofurans From Stationary Sources;" as contained in 40 CFR Part 60, Appendix A; as published in the July 1, 2008 Code of Federal Regulations.

(bb) USEPA method 26; "Determination of Hydrogen Halide and Halogen Emissions From Stationary Sources Non-Isokinetic Method;" as contained in 40 CFR Part 60, Appendix A; as published in the July 1, 2008 Code of Federal Regulations.

(cc) USEPA method 26A; "Determination of hydrogen halide and halogen emissions from stationary sources - isokinetic method;" as published in the July 1, 2008 Code of Federal Regulations.

(dd) USEPA method 29; "Determination of Metals Emissions From Stationary Sources;" as contained in 40 CFR Part 60, Appendix A; as published in the July 1, 2008 Code of Federal Regulations.

(ee) Section 3005 of the Solid Waste Disposal Act; contained in 42 USC 6925; "Permits for treatment, storage, or disposal of hazardous waste;" published January 2, 2006 in Supplement V of the 2000 edition of the United States Code.

Effective: 08/24/2009

R.C. 119.032 review dates: 05/22/2009 and 08/24/2014

CERTIFIED ELECTRONICALLY
Certification

08/14/2009
Date

Promulgated Under: 119.03
Statutory Authority: 3704.03(E)
Rule Amplifies: 3704.03(A), 3704.03(E)
Prior Effective Dates: 7/9/91, 3/23/04

3745-75-02 **Emission limits.**

[Comment: For dates of non-regulatory government publications, publications of recognized organizations and associations, federal rules, and federal statutory provisions referenced in this rule, see the last paragraph of rule 3745-75-01 of the Administrative Code titled "Reference to materials."]

(A) Particulate emissions from any small HMIWI shall not exceed one hundred fifteen milligrams per dry standard cubic meter adjusted to seven per cent oxygen in the exhaust stream.

(B) Particulate emissions from any medium HMIWI shall not exceed sixty-nine milligrams per dry standard cubic meter adjusted to seven per cent oxygen in the exhaust stream.

(C) Particulate emissions from any large HMIWI shall not exceed thirty-four milligrams per dry standard cubic meter adjusted to seven per cent oxygen in the exhaust stream.

(D) Hydrogen chloride emissions from any HMIWI shall not exceed one hundred parts per million by volume on a dry basis adjusted to seven per cent oxygen in the exhaust stream unless the emission has been reduced by control equipment having a minimum control efficiency of ninety-three per cent by concentration for hydrogen chloride.

(E) Carbon monoxide emissions from any HMIWI expressed by volume, on a dry basis, adjusted to seven per cent oxygen in the exhaust stream shall not exceed one hundred parts per million as an hourly average, and shall not exceed forty parts per million as a twelve-hour rolling average (not including startup and shutdown) as measured by continuous emission monitors, and shall not exceed forty parts per million as a three-hour rolling average (not including startup and shutdown) as measured by USEPA method 10 or 10B of 40 CFR Part 60, Appendix A.

(F) Sulfur dioxide emissions from any HMIWI shall not exceed fifty-five parts per million by volume, on a dry basis, adjusted to seven per cent oxygen in the exhaust stream.

(G) Nitrogen oxides emissions from any HMIWI shall not exceed two hundred fifty parts per million by volume, on a dry basis, adjusted to seven per cent oxygen in the exhaust stream.

(H) Dioxin and furan emissions from any HMIWI expressed on a dry basis adjusted to seven per cent oxygen in the exhaust stream shall be limited to a maximum of either one hundred twenty-five nanograms per standard cubic meter expressed as total mass or 2.3 nanograms per standard cubic meter expressed as toxic equivalent.

(I) Emissions of metals from any HMIWI shall not exceed the following limits, adjusted to seven per cent oxygen in the exhaust stream:

(1) Arsenic and compounds: 0.21 milligrams per dry standard cubic meter

(2) Beryllium and compounds: 0.026 milligrams per dry standard cubic meter

(3) Cadmium and compounds: 0.16 milligrams per dry standard cubic meter

(4) Chromium and compounds: 0.075 milligrams per dry standard cubic meter

(5) Lead and compounds: 1.2 milligrams per dry standard cubic meter

(6) Mercury and compounds: 0.55 milligrams per dry standard cubic meter

(7) Nickel and compounds: 0.65 milligrams per dry standard cubic meter

(J) The allowable concentrations specified by paragraphs (A) to (I) of this rule shall be computed as twelve-hour rolling averages (not including startup and shutdown) for units equipped with appropriate continuous emission monitors installed and maintained in accordance with the applicable procedures under 40 CFR Part 60, Appendix B and Appendix F, or as three-hour rolling averages (not including startup and shutdown) for units not so equipped, except where different averaging periods are specified by those paragraphs.

(K) Visible particulate emissions from any HMIWI shall not exceed five per cent opacity except for six minutes in any continuous sixty minute period during which opacity shall not exceed ten per cent.

(L) Use of a bypass stack (except during startup, shutdown, or malfunction) shall constitute a violation of the particulate matter, dioxin/furan, hydrogen chloride, lead, cadmium, and mercury emission limits.

(M) For units not equipped with a carbon monoxide monitor, operation of the unit above the maximum charge rate and below the minimum secondary chamber temperature (each measured on a three-hour rolling average) simultaneously shall constitute a violation of the carbon monoxide emission limit.

(N) For units equipped with a dry scrubber followed by a fabric filter, operation of the unit above the maximum fabric filter inlet temperature, above the maximum charge rate, and below the minimum dioxin/furan sorbent flow rate (each measured on a three-hour rolling average) simultaneously shall constitute a violation of the dioxin/furan emission limit.

(O) For units equipped with a wet scrubber but not a dry scrubber, operation of the unit above the maximum charge rate, below the minimum secondary chamber

temperature, and below the minimum scrubber liquor flow rate (each measured on a three-hour rolling average) simultaneously shall constitute a violation of the dioxin/furan emission limit.

(P) For units equipped with a dry scrubber followed by a fabric filter, operation of the unit above the maximum charge rate and below the minimum mercury sorbent flow rate (each measured on a three-hour rolling average) simultaneously shall constitute a violation of the mercury emission limit.

(Q) For units equipped with a wet scrubber but not a dry scrubber, operation of the unit above the maximum charge rate and above the maximum flue gas temperature (each measured on a three-hour rolling average) simultaneously shall constitute a violation of the mercury emission limit.

(R) For units equipped with a wet scrubber, operation of the unit above the maximum charge rate and below the minimum scrubber liquor pH (each measured on a three-hour rolling average) simultaneously shall constitute a violation of the hydrogen chloride emission limit.

(S) For units equipped with a dry scrubber followed by a fabric filter but not a wet scrubber, operation of the unit above the maximum charge rate and below the minimum hydrogen chloride sorbent flow rate (each measured on a three-hour rolling average) simultaneously shall constitute a violation of the hydrogen chloride emission limit.

(T) For units equipped with a wet scrubber, operation of the unit above the maximum charge rate and below the minimum pressure drop across the wet scrubber or below the minimum horsepower or amperage to the system (each measured on a three-hour rolling average) simultaneously shall constitute a violation of the particulate matter emission limit.

(U) For units not equipped with a wet scrubber, or a dry scrubber followed by a fabric filter, continuous compliance with the allowable concentrations specified by paragraphs (A) to (E), (H), and (I)(6) of this rule shall be established by continuous monitoring of surrogate measures of combustion or control efficiency, except where those emissions are measured by continuous monitors installed and maintained in accordance with 40 CFR, Part 60. The owner or operator of the unit shall petition the administrator of the USEPA for approval of site-specific operating parameters to be established during the initial performance test and continuously monitored thereafter. The owner or operator shall not conduct the initial performance test until after the petition has been approved by the administrator.

(V) The owner or operator of an affected facility may conduct a repeat performance test within thirty days of violation of applicable operating parameter(s) to demonstrate that the affected facility is not in violation of the applicable emission limit(s). Repeat performance tests conducted pursuant to this paragraph shall be conducted using the

identical operating parameters that indicated a violation under paragraphs (L) to (U) of this rule.

(W) The owner or operator of an affected facility may conduct a repeat performance test at any time to establish new values for the operating parameters. The director or the USEPA may request a repeat performance test at any time.

Effective: 08/24/2009

R.C. 119.032 review dates: 05/22/2009 and 08/24/2014

CERTIFIED ELECTRONICALLY
Certification

08/14/2009
Date

Promulgated Under: 119.03
Statutory Authority: 3704.03(E)
Rule Amplifies: 3704.03(A), 3704.03(E)
Prior Effective Dates: 7/9/91, 3/23/04

3745-75-03 **Design parameters and operating restrictions.**

[Comment: For dates of non-regulatory government publications, publications of recognized organizations and associations, federal rules, and federal statutory provisions referenced in this rule, see the last paragraph of rule 3745-75-01 of the Administrative Code titled "Reference to materials."]

(A) All incineration shall occur in a controlled air multi-chamber incinerator, or equivalent technology as approved by the director, which provides complete combustion of waste, excluding metallic items, to carbonized or mineralized ash. Any ash that does not meet the criteria shall be reincinerated.

(B) The secondary combustion chamber of any unit shall operate so that the instantaneous temperature of the gas exiting the chamber is a minimum of ninety per cent on the absolute scale of the highest three-hour average secondary chamber temperature (taken, at a minimum, once every minute) measured during the most recent performance test demonstrating compliance with the particulate matter, carbon monoxide, and dioxin/furan limits, or a minimum temperature of one thousand six hundred degrees Fahrenheit, whichever is greater.

(C) The primary combustion chamber shall be maintained so that the exit gas has a minimum temperature of one thousand four hundred degrees Fahrenheit for continuous-duty units or one thousand two hundred degrees Fahrenheit for batch or intermittent feed units.

(D) The secondary combustion chamber of any HMIWI shall allow for a one-second retention time at the minimum temperature specified in paragraph (B) of this rule except for any unit that has a longer retention time specified in an Ohio EPA permit to install or is constructed after January 1, 1991 which shall have a two-second retention time at the minimum temperature specified in paragraph (B) of this rule.

(E) All medical/infectious waste incinerators with a capacity greater than four hundred pounds per hour shall be equipped with an automatic feeder which is designed and operated so that wastes cannot be charged if the gas exiting the secondary combustion chamber has not reached the minimum temperature specified in paragraph (B) of this rule.

(F) Medical/infectious waste shall not be loaded into the primary combustion chamber of any medical/infectious waste incinerator until the gas exiting the primary chamber has reached the minimum temperature specified in paragraph (C) of this rule.

(G) The stack or stacks from any HMIWI shall be designed to minimize the impact of the emissions on employees, residents, patients, visitors, or nearby residences. The design of any unit shall meet good engineering practices so as not to cause excessive

concentrations of any air contaminant at any air intake for heating and cooling of any building, or at operable windows, or doors.

(H) Any mechanically-fed medical/infectious waste incinerator must be equipped with an air lock system to prevent opening the incinerator to the room environment. The volume of the loading systems shall be designed so as to prevent overcharging of the unit to assure complete combustion of waste.

(I) Following the date on which the initial performance test is completed or is required to be completed under paragraph (B)(4) of rule 3745-75-06 of the Administrative Code, a HMIWI may not be operated above any of the applicable maximum operating parameters or below any of the applicable minimum operating parameters listed in paragraphs (H) and (I) of rule 3745-75-04 of the Administrative Code and measured as three-hour rolling averages (calculating each hour as the average of the previous three operating hours) at any time except during periods of startup, shutdown, and malfunction. Operating parameter limits do not apply during performance tests. Operation above the established maximum or below the established minimum operating parameter(s) shall constitute a violation of established operating parameters.

(J) All medical/infectious waste incinerators with a capacity greater than four hundred pounds per hour shall be equipped with an air pollution control device designed to reduce hydrogen chloride emissions and provide for continuous compliance with the hydrogen chloride emission limits when the unit is in operation.

(K) All incinerators, including all associated equipment and grounds, shall be designed, operated and maintained to prevent the emission of objectionable odors.

(L) Medical/infectious waste that is also radioactive shall be managed in accordance with the applicable rules of the Ohio department of health and regulations of the United States nuclear regulatory commission.

[Note: section 3734.027 of the Revised Code prohibits the disposal of low level radioactive waste in an "infectious waste treatment facility" as that term is defined in the Revised Code.]

(M) The owner or operator of any HMIWI shall not intentionally dispose of the following items by burning in the incinerator:

(1) Visible globules of mercury;

(2) Nickel-cadmium batteries;

(3) Switches, thermometers, batteries, and other devices containing mercury; and

(4) Bags or other containers for infectious waste handling which contain cadmium, chromium, or lead as a pigmenting agent.

(N) All HMIWI units are to be operated only by properly trained and qualified personnel. A minimum of twenty-four hours of HMIWI operation training shall be provided to each operator before he/she is allowed to operate an incinerator. This may include, for each operator, the successful completion of the training course in the operation and maintenance of hospital medical waste incinerators developed by the "Control Technology Center", USEPA, or courses or instructions provided by incinerator manufacturers, professional engineering organizations, colleges or universities, corporate training programs, or Ohio EPA. A copy of all the training records for each operator shall be immediately available to the Ohio EPA and USEPA personnel upon request.

(O) Training shall be obtained by completing a HMIWI operator training course that includes, at a minimum, the following provisions:

(1) Twenty-four hours of training on the following subjects:

(a) Environmental concerns, including pathogen destruction and types of emissions;

(b) Basic combustion principles, including products of combustion;

(c) Operation of the type of incinerator to be used by the operator, including proper startup, waste charging, and shutdown procedures;

(d) Combustion controls and monitoring;

(e) Operation of air pollution control equipment and factors affecting performance;

(f) Methods to monitor pollutants (continuous emission monitoring systems and monitoring of HMIWI and air pollution control device operating parameters) and equipment calibration procedures;

(g) Inspection and maintenance of the HMIWI, air pollution control devices and continuous emission monitoring systems;

(h) Actions to correct malfunctions or conditions that may lead to malfunction;

(i) Bottom and fly ash characteristics and handling procedures;

(j) Applicable federal, state, and local regulations;

(k) Work safety procedures;

(l) Pre-startup inspections; and

(m) Recordkeeping requirements.

(2) An examination designed and administered by the instructor.

(3) Reference material distributed to the attendees covering the course topics.

(P) Qualification shall be obtained by:

(1) Completion of a training course that satisfies the criteria under paragraph (O) of this rule;

(2) Either six months experience as a HMIWI operator, six months experience as a direct supervisor of a HMIWI operator, or completion of at least two burn cycles under the observation of two qualified HMIWI operators; and

(3) Review of the information contained within the operations manual required by paragraph (T) of this rule.

(Q) Qualification is valid from the date on which the examination is passed or the completion of the required experience, whichever is later.

(R) To maintain qualification, the trained and qualified HMIWI operator shall complete and pass the following training on an annual basis:

(1) A review or refresher course of at least four hours covering, at a minimum, the following:

(a) Update of regulations;

(b) Incinerator operation, including startup and shutdown procedures;

(c) Inspection and maintenance;

(d) Responses to malfunctions or conditions that may lead to malfunction; and

(e) Discussion of operating problems encountered by attendees.

(2) Review of the information contained within the operations manual required by paragraph (T) of this rule.

(S) A lapsed qualification shall be renewed by one of the following methods:

(1) For a lapse of less than three years, the HMIWI operator shall complete and pass a standard annual refresher course and review of the operations manual described in paragraph (R) of this rule.

(2) For a lapse of three years or more, the HMIWI operator shall complete and pass a training course with the minimum criteria described in paragraph (O) of this rule, and shall review the information contained within the operations manual required by paragraph (T) of this rule.

(T) The owner or operator of an affected facility shall maintain an operations manual available to operators and to the USEPA and the director, which will include the following:

(1) A summary of applicable regulations of the Ohio EPA division of air pollution control and the Ohio EPA division of solid and infectious waste management;

(2) A description of the basic combustion principles applicable to the incinerator;

(3) Procedures for receiving, handling, and charging waste;

(4) Startup, shutdown, and malfunction procedures for the incinerator and associated control equipment;

(5) Procedures for maintaining proper combustion air supply levels;

(6) Procedures for operating the incinerator and associated control equipment within the standards prescribed by this rule;

(7) Procedures for responding to periodic malfunction or conditions that may lead to malfunction;

(8) Procedures for monitoring incinerator emissions;

(9) Reporting and recordkeeping procedures;

(10) Procedures for handling ash; and

(11) A list of the current allowable values of all site-specific operating parameters, with the dates of the most recent performance test(s) and the actual operating conditions that served as a basis for deriving the allowable values.

(U) Every operator qualified to operate the incinerator shall review the information contained within the operations manual required by paragraph (T) of this rule prior to assumption of duties affecting the operation of the incinerator and at least annually thereafter.

(V) All medical/infectious waste incinerators shall be equipped with mechanical feeding arrangements which prevent exposure of personnel to any hazard which may result from charging of feed into a preheated primary chamber.

Effective: 08/24/2009

R.C. 119.032 review dates: 05/22/2009 and 08/24/2014

CERTIFIED ELECTRONICALLY
Certification

08/14/2009
Date

Promulgated Under: 119.03
Statutory Authority: 3704.03(E)
Rule Amplifies: 3704.03(A), 3704.03(E)
Prior Effective Dates: 7/9/91, 3/23/04

3745-75-04 **Monitoring requirements.**

[Comment: For dates of non-regulatory government publications, publications of recognized organizations and associations, federal rules, and federal statutory provisions referenced in this rule, see the last paragraph of rule 3745-75-01 of the Administrative Code titled "Reference to materials."]

(A) Each incinerator unit burning hospital or medical/infectious waste shall be equipped with a continuous temperature recorder for the primary and secondary combustion chambers. The instrument shall record a measurement at least once every minute.

(B) Each medical/infectious waste incinerator with a capacity greater than one thousand pounds per hour shall be equipped with a continuous carbon monoxide monitor and alarm. The alarm shall indicate whenever concentrations exceed one hundred fifty parts per million.

(C) All facilities that operate an infectious waste incinerator shall install, maintain and operate a radioactivity monitor and alarm. The radioactivity monitor shall be installed to monitor all medical/infectious waste prior to combustion.

(D) Any unit that is equipped with a bypass stack shall be equipped with a device to continuously monitor and record the temperature in the bypass stack. The device shall be maintained and calibrated according to manufacturers' specifications and shall record the date, time, and duration of every use of the bypass stack.

(E) A scale (accurate to within one pound) shall be installed, calibrated (to manufacturers' specifications), and operated to measure the weight of all of the material charged to the unit. A written log shall be kept that records the amount of material charged to any unit on a pounds per hour basis or a pounds per batch basis. Alternative arrangements may be approved by the director provided they can be shown to be of equivalent effectiveness as a method of regulating flow into the incinerator and generating a permanent record of pound per hour charging rates.

(F) Each medical/infectious waste incinerator with a capacity greater than one thousand pounds per hour shall be equipped with a continuous opacity monitor unless exempted by the director because of the influence of condensed water vapor in the stack exit gas.

(G) Any continuous opacity or carbon monoxide monitor required under this rule shall be installed and maintained in accordance with 40 CFR, Part 60.

(H) The following operating parameters are to be measured and recorded at the stated minimum frequencies for HMIWI units equipped with a wet scrubber, or a dry scrubber followed by a fabric filter:

Operating Parameters to be Monitored	Minimum Frequency		HMIWI		
	Data Measurement	Data Recording	HMIWI with Dry Scrubber Followed by Fabric Filter	HMIWI with Wet Scrubber	HMIWI with Dry Scrubber Followed by Fabric Filter and Wet Scrubber
Maximum Operating Parameters					
Maximum Charge Rate	Once per Charge	Once per Charge	X	X	X
Maximum Fabric Filter Inlet Temperature	Continuous	Once per Minute	X		X
Maximum Flue Gas Temperature	Continuous	Once per Minute		X	X
Minimum Operating Parameters					
Minimum secondary chamber temperature	Continuous	Once per minute	X	X	X
Minimum dioxin/furan sorbent flow rate	Hourly	Once per hour	X		X
Minimum NCL sorbent flow rate	Hourly	Once per hour	X		X
Minimum mercury (HG) sorbent flow rate	Hourly	Once per hour	X		X
Minimum pressure drop across the wet scrubber or minimum horsepower or amperage to wet scrubber	Continuous	Once per minute		X	X
Minimum scrubber liquor flow rate	Continuous	Once per minute		X	X
Minimum scrubber liquor pH	Continuous	Once per minute		X	X

(I) For HMIWI units not equipped with a wet scrubber, or a dry scrubber followed by a fabric filter, equipment shall be installed, calibrated (to the manufacturers' specifications), maintained, and operated to monitor the site-specific operating parameters developed pursuant to paragraph (U) of rule 3745-75-02 of the Administrative Code.

(J) The owner or operator of a HMIWI shall record the amount and type of mercury, hydrogen chloride, and dioxin/furan sorbent used during each hour of operation, as applicable.

(K) The owner or operator of a HMIWI shall install, calibrate (to manufacturers' specifications), maintain, and operate devices (or establish methods) for monitoring the applicable maximum and minimum operating parameters listed in paragraph (H) of this rule such that these devices (or methods) measure and record values for these operating parameters at the frequencies indicated in paragraph (H) of this rule at all times except during periods of startup and shutdown.

(L) The owner or operator of a HMIWI shall obtain monitoring data at all times during HMIWI operation except during periods of monitoring equipment malfunction, calibration, or repair. At a minimum, valid monitoring data shall be obtained and recorded for seventy-five per cent of the operating hours per day and for ninety per cent of the operating days per calendar quarter that the affected facility combusts hospital waste and/or medical/infectious waste.

Effective: 08/24/2009

R.C. 119.032 review dates: 05/22/2009 and 08/24/2014

CERTIFIED ELECTRONICALLY
Certification

08/14/2009
Date

Promulgated Under: 119.03
Statutory Authority: 3704.03(E)
Rule Amplifies: 3704.03(A), 3704.03(E)
Prior Effective Dates: 7/9/91, 3/23/04

3745-75-05 **Recordkeeping and inspections.**

[Comment: For dates of non-regulatory government publications, publications of recognized organizations and associations, federal rules, and federal statutory provisions referenced in this rule, see the last paragraph of rule 3745-75-01 of the Administrative Code titled "Reference to materials."]

(A) The owner or operator of each HMIWI shall submit a report including the information listed in paragraphs (A)(1) to (A)(8) of this rule initially within six months after submittal of the report required by paragraph (B)(4) of rule 3745-75-06 of the Administrative Code and thereafter at intervals no greater than six months. The reports shall be signed by the facilities manager.

(1) The values for the site-specific operating parameters established pursuant to paragraph (E) of rule 3745-75-06 of the Administrative Code;

(2) The highest maximum operating parameter and the lowest minimum operating parameter, as applicable, for each operating parameter recorded for the semiannum being reported, pursuant to paragraph (I) of rule 3745-75-03 of the Administrative Code.

(3) The highest maximum operating parameter and the lowest minimum operating parameter, as applicable for each operating parameter recorded pursuant to paragraph (I) of rule 3745-75-03 of the Administrative Code, for each of the three semiannums prior to the semiannum being reported, in order to provide the director with a summary of the performance of the facility over a period of two full years;

(4) Any information recorded under paragraph (B) of this rule for each of the two quarters encompassed by the semiannum;

(5) Any information recorded under paragraph (B) of this rule for each of the six quarters encompassed by the three prior semiannums;

(6) If a performance test was conducted during the reporting period, the results of that test;

(7) If no exceedances or malfunctions were reported under paragraph (B) of this rule for the semiannum being reported, a statement that no exceedances occurred during the reporting period;

(8) The date, time, and duration of any use of the bypass stack; the reason for malfunction, and corrective action taken;

(9) Any activation of the radioactivity alarm; the reason for the alarm, and corrective action taken.

(B) Pursuant to 40 CFR 60.7 and 40 CFR 60.13(h), the owner or operator of each incinerator shall submit reports on a quarterly basis to the appropriate Ohio EPA district office or local air agency containing the information listed in paragraphs (B)(1) to (B)(3) of this rule. These reports of exceedances, missing data, and malfunctions shall be submitted by February first, May first, August first, and November first of each year and shall cover the data obtained during the previous calendar quarters.

(1) Identification of calendar days for which data on emission rates or operating parameters specified under rules 3745-75-02 and 3745-75-03 of the Administrative Code exceeded the applicable limits, with a description of the exceedances, reasons for such exceedances, and a description of corrective actions taken.

(2) Identification of calendar days for which data on emission rates or operating parameters specified under rules 3745-75-02 and 3745-75-03 of the Administrative Code have not been obtained, with an identification of the emission rates or operating parameters not measured, reasons for not obtaining the data, and a description of corrective actions taken.

(3) Identification of calendar days, times and durations of malfunctions, a description of the malfunction and the corrective action taken.

(C) All logs, charts and other records required by paragraphs (D), (E), (L) and either (H) or (I) of rule 3745-75-04 of the Administrative Code, and reports required by paragraph (A) or (B) of this rule shall be maintained for a period of five years and be available for inspection by the Ohio EPA or its authorized representatives and by the USEPA at any reasonable time.

(D) All records of concentrations of pollutants listed under paragraphs (A) to (I) of rule 3745-75-02 of the Administrative Code and measurements of opacity as determined by continuous emissions monitoring, as applicable, shall be maintained for a period of five years and be available for inspection by the Ohio environmental protection agency or its authorized representatives and by the USEPA at any reasonable time.

(E) All records of operator training and qualification shall be retained for five years. This shall include the names of HMIWI operators and their dates of completion of the following requirements:

(1) Training under paragraph (O) of rule 3745-75-03 of the Administrative Code;

(2) Qualification under paragraph (S) of rule 3745-75-03 of the Administrative Code; and

(3) Review of the information contained within the operations manual required by paragraph (T) of rule 3745-75-03 of the Administrative Code, initially and at least annually thereafter as prescribed by paragraph (U) of rule 3745-75-03 of the Administrative Code.

(F) The owner or operator of an affected facility shall prepare a waste management plan. The waste management plan shall identify both the feasibility and the approach to separate certain components of solid waste from the health care waste stream in order to reduce the amount of toxic emissions from incinerated waste. A waste management plan may include, but is not limited to, elements such as paper, cardboard, plastics, glass, battery, or metal recycling; or purchasing recycled or recyclable products. A waste management plan may include different goals or approaches for different areas or departments of the facility and need not include new waste management goals for every waste stream. It should identify, where possible, reasonably available additional waste management measures, taking into account the effectiveness of waste management measures already in place, the costs of additional measures, the emission reductions expected to be achieved, the need to minimize employee exposure to pathogens, and any other environmental, energy, or safety impacts they may have. The publication "An Ounce of Prevention: Waste Reduction Strategies for Health Care Facilities," from the American Hospital Association, shall be considered in the development of the waste management plan.

(G) In addition to the report required under paragraph (A)(9) of this rule, the owner or operator shall immediately report any instance of radioactivity alarm activation to the environmental radiation safety section of the bureau of radiation protection of the Ohio department of health.

Effective: 08/24/2009

R.C. 119.032 review dates: 05/22/2009 and 08/24/2014

CERTIFIED ELECTRONICALLY
Certification

08/14/2009
Date

Promulgated Under: 119.03
Statutory Authority: 3704.03(E)
Rule Amplifies: 3704.03(A), 3704.03(E)
Prior Effective Dates: 7/9/91, 3/23/04

3745-75-06 **Certification and compliance time schedules.**

[Comment: For dates of non-regulatory government publications, publications of recognized organizations and associations, federal rules, and federal statutory provisions referenced in this rule, see the last paragraph of rule 3745-75-01 of the Administrative Code titled "Reference to materials."]

(A) Certification and permit application requirements.

Any owner or operator of any HMIWI subject to rule 3745-75-02 of the Administrative Code, shall, as of the effective date of federal approval of this rule, operate pursuant to a permit issued under rule 3745-77-02 of the Administrative Code and by not later than April 15, 2002, either:

(1) Certify in writing to the director that such source is in full compliance with all requirements of Chapter 3745-75 of the Administrative Code. Such certification shall include: equipment description, Ohio environmental protection agency permit application number (if assigned), and all necessary data (consistent with the appropriate permit application appendices) and calculations (including residence time) which confirm the compliance status. The certification shall also include a detailed plan of the facility that includes the dimensions of all nearby buildings and structures, including doors, windows used for ventilation, and air intakes for the heating and cooling system. This plan shall be reviewed and approved for submission by a registered professional engineer or registered architect. The certification shall also include documentation that an application for a permit to operate such source in accordance with rule 3745-77-02 of the Administrative Code was submitted; or

(2) Provide documentation of control plan(s) submitted in conformity with paragraph (C)(9) of rule 3745-77-03 of the Administrative Code, and paragraph (B)(2)(a) of this rule if applicable. The plan shall include documentation that an application for a permit to operate such source in accordance with rule 3745-77-02 of the Administrative Code was submitted. The documentation shall also include a detailed plan of the facility that includes the dimensions of all nearby buildings and structures, including doors, windows used for ventilation, and air intakes for the heating and cooling system. This plan shall be reviewed and approved for submission by a registered professional engineer or registered architect. Such documentation shall include a compliance program which will bring the source into full compliance with all of the requirements of this chapter as expeditiously as practicable, but in no event, later than the dates specified in paragraph (B) of this rule, and shall identify all reasonable interim control measures.

(B) Compliance time schedules.

(1) No owner or operator of a HMIWI, which is subject to the requirements of paragraph (A), (B), (C), (D), (E), (F), (G), (H), or (I) of rule 3745-75-02 of the

Administrative Code and paragraphs (B) and (D) of rule 3745-75-03 of the Administrative Code, shall fail to achieve compliance with said requirements as expeditiously as practicable, but no later than August 15, 2001, except as allowed under paragraph (B)(2) of this rule.

(2) Any owner or operator of a HMIWI, which is subject to the requirements of paragraph (A), (B), (C), (D), (E), (F), (G), (H), or (I) of rule 3745-75-02 of the Administrative Code and paragraphs (B) and (D) of rule 3745-75-03 of the Administrative Code, may submit to the director evidence of federal approval of an extension of applicable compliance dates granted in accordance with 40 CFR 62.14470(b) or 40 CFR 62.14471(b). The evidence must be submitted before the later of thirty days after the adoption of this rule or July 31, 2001. The director shall approve the dates, conditional upon satisfactory fulfillment of the increments of progress already required to be completed. The director will approve or deny any extensions before the later of forty-five days after the adoption of this rule or August 15, 2001. Any units not granted federal extensions before that time shall comply by August 15, 2001. The dates for extensions shall in no case require final compliance later than September 15, 2002. If a unit is granted an extension, the owner or operator must comply with the operator training and qualification requirements of paragraph (N) of rule 3745-75-03 of the Administrative Code as expeditiously as practicable, but no later than August 15, 2001. In addition, the owner or operator must demonstrate that he/she is taking steps toward compliance with the emission limits in this chapter by completing increments of progress. If an extension has been granted under 40 CFR 62.14471(b) and the director approves the extension, the dates for extension and increments of progress shall be the dates listed in that approval. If an extension has been granted under 40 CFR 62.14470(b) and the director approves the extension, the increments of progress shall be the following:

(a) A final control plan must have been submitted to the USEPA by September 15, 2000. The final control plan must, at a minimum, include a description of the air pollution control device(s) or process changes that will be employed for each unit to comply with the emission limits and other requirements of 40 CFR Part 62, Subpart HHH.

(b) Contracts for onsite construction, onsite installation of emission control equipment, or incorporation of process changes must have been awarded by April 15, 2001. A signed copy of the contract(s) must have been submitted to the USEPA and the director by March 23, 2004.

(c) Onsite construction, onsite installation of emission control equipment, or process changes needed to meet the emission limits as outlined in the final control plan must begin by December 15, 2001.

(d) Onsite construction, installation of emission control equipment, or process changes must be completed by July 15, 2002.

(e) Final compliance must be achieved by September 15, 2002. This includes incorporation of all process changes and/or completion of retrofit construction as described in the final control plan, connection of air pollution control equipment or process changes such that the HMIWI is brought on line, and ensuring that all necessary process changes and air pollution control equipment are operating properly.

(3) Any owner or operator of an HMIWI which is subject to increments of progress approved under paragraph (B)(2) of this rule shall submit notification to the director within ten business days of completing or failing to complete any of the increments of progress. The notification must be signed by the facilities manager.

(4) The date of the initial performance test required under paragraph (E) of this rule shall not be later than one hundred eighty days after the date of final compliance approved under paragraph (B)(1) or (B)(2) of this rule. The following information shall be submitted within sixty days after the test is conducted and shall be signed by the facilities manager:

(a) The results of the initial performance test;

(b) The values for the site-specific operating parameters established pursuant to paragraph (E) of this rule as applicable; and

(c) The waste management plan required by paragraph (E) of rule 3745-75-05 of the Administrative Code.

(5) Any owner or operator required to install mechanical feeding equipment due to the provisions of paragraph (V) of rule 3745-75-03 of the Administrative Code shall achieve compliance with paragraphs (F) and (V) of rule 3745-75-03 of the Administrative Code as expeditiously as practicable, but not later than the deadlines established in the following schedule:

(a) Award contracts for process modifications; or, issue orders for the purchase of component parts to accomplish process modification by May 31, 2004;

(b) Initiate on-site construction or installation of process changes by August 31, 2004;

(c) Complete on-site construction or installation of process changes by November 15, 2004;

(d) Achieve final compliance by December 15, 2004.

(6) Any owner or operator that chooses not to retrofit mechanical feeding equipment to achieve compliance with paragraph (V) of rule 3745-75-03 of the Administrative Code shall permanently cease operation of the incinerator as expeditiously as practicable, but not later than December 15, 2004.

(7) Any owner or operator of a HMIWI, which is subject to the requirements of paragraphs (A) to (G) of rule 3745-75-04 of the Administrative Code, shall achieve compliance with said requirements as expeditiously as practicable, but not later than August 15, 2001, except as allowed under paragraph (B)(2) of this rule.

(8) Any owner or operator required to install and operate a radioactivity monitor and alarm due to the provisions of paragraph (C) of rule 3745-75-04 of the Administrative Code shall achieve compliance with paragraph (C) of rule 3745-75-04 of the Administrative Code as expeditiously as practicable, but not later than August 31, 2004.

[Note: an earlier compliance date for the radioactivity monitor and alarm may pertain under a previous version of this rule for medical/infectious waste incinerators located offsite, or at facilities where radioactive materials are used or are licensed for use by the United States nuclear regulatory commission.]

(C) Any owner or operator of any HMIWI subject to paragraph (N), (T) or (U) of rule 3745-75-03 of the Administrative Code shall comply with the requirements specified as expeditiously as practicable, but no later than August 15, 2001.

(D) Within thirty days after the installation of the continuous monitoring and recording equipment, the owner or operator shall conduct a performance specification test of such equipment pursuant to division (I) of section 3704.03 of the Revised Code and 40 CFR Part 60, Appendix B, performance specification test one. Personnel from the appropriate Ohio EPA district office or local air agency shall be permitted to witness the performance specification test, and two copies of the test results shall be submitted to the appropriate Ohio EPA district office or local air agency within forty-five days after the test is completed.

(E) All owners or operators of HMIWI units shall conduct an initial performance test to establish the values of the operating parameters from paragraph (H) or (I) of rule 3745-75-04 of the Administrative Code, and to determine compliance with applicable emission limits using the procedures listed below. The use of the bypass stack during a performance test shall invalidate the performance test.

(1) All performance tests shall consist of a minimum of three test runs conducted under representative operating conditions.

(2) The minimum sample time shall be one hour per test run unless otherwise indicated.

(3) USEPA method 1 of 40 CFR Part 60, Appendix A, shall be used to select the sampling location and number of traverse points.

(4) USEPA method 3, 3A, or 3B of 40 CFR Part 60, Appendix A, shall be used for gas composition analysis, including measurement of oxygen concentration.

USEPA method 3, 3A, or 3B of 40 CFR Part 60, Appendix A, shall be used simultaneously with each reference method.

(5) The pollutant concentrations shall be adjusted to seven per cent oxygen using the following equation:

$C_{adj} = (C_{meas})(20.9 - 7) / (20.9 - \%O_2)$

where

C_{meas} =measured concentration on a dry basis;

$\%O_2$ =measured oxygen concentration in the exhaust stream on a dry basis; and

C_{adj} =adjusted concentration.

(6) USEPA method 5 or 29 of 40 CFR Part 60, Appendix A, shall be used to measure the particulate matter emissions.

(7) USEPA method 9 of 40 CFR Part 60, Appendix A, shall be used to measure stack opacity.

(8) USEPA method 10 or 10B of 40 CFR Part 60, Appendix A, shall be used to measure the carbon monoxide emissions.

(9) USEPA method 23 of 40 CFR Part 60, Appendix A, shall be used to measure total dioxin/furan emissions. The minimum sample time shall be four hours per test run. If the affected facility chooses the toxic equivalency standard for dioxin/furan under paragraph (H) of rule 3745-75-02 of the Administrative Code, the following procedure shall be used to determine compliance:

(a) Measure the concentration of each dioxin/furan tetra- through octa- congener emitted using USEPA method 23;

(b) For each dioxin/furan congener measured in accordance with paragraph (E)(9)(a) of this rule, multiply the congener concentration by its corresponding toxic equivalency factor specified in table two of 40 CFR Part 60, Subpart Ec; and

(c) Sum the products calculated in accordance with paragraph (E)(9)(b) of this rule to obtain the total concentration of dioxin/furan emitted in terms of toxic equivalency.

(10) USEPA method 26 or 26A of 40 CFR Part 60, Appendix A, shall be used to measure hydrogen chloride emissions.

(11) USEPA method 29 of 40 CFR Part 60, Appendix A, shall be used to measure arsenic, beryllium, chromium, nickel, lead, cadmium, and mercury emissions.

(F) All owners or operators of HMIWI units shall conduct periodic performance tests to demonstrate compliance with the requirements in paragraphs (A) to (E), and (K) of rule 3745-75-02 of the Administrative Code, as described below.

(1) The tests for opacity, particulate matter, carbon monoxide, and hydrogen chloride shall be conducted annually (no more than twelve months following the previous performance test) using the applicable procedures and test methods listed in paragraph (E) of this rule. If all three performance tests over a three-year period indicate compliance with the emission limit for particulate matter, carbon monoxide, or hydrogen chloride, the owner or operator may forego a performance test for that pollutant for the subsequent two years. At a minimum, a performance test for particulate matter, carbon monoxide, and hydrogen chloride shall be conducted every third year (no more than thirty-six months following the previous performance test). If a performance test conducted every third year indicates compliance with the emission limit for a pollutant (particulate matter, carbon monoxide, or hydrogen chloride), the owner or operator may forego a performance test for that pollutant for an additional two years. If any performance test indicates noncompliance with the respective emission limit, a performance test for that pollutant shall be conducted annually until all annual performance tests over a three-year period indicate compliance with the emission limit. The annual test for opacity shall be conducted in any case.

(2) The use of the bypass stack during a performance test shall invalidate the performance test.

(3) The director may require more frequent tests if, in the director's judgment, there may be a violation of any applicable emission standards or there has been a change in the operation that may cause an increase in emissions due to a change in waste streams, infectious waste generators, or other operating conditions.

(4) The director or his/her representative shall be allowed to witness the tests, examine testing equipment, and require the acquisition or submission of data and information necessary to assure that the source operation and testing procedures provide a valid characterization of the emissions from the source and/or performance of the control equipment. The Ohio EPA shall be notified at least thirty days in advance by the owner or operator. The notice shall specify the date, time, place, source operating parameters, proposed test procedures, and persons conducting the test. Test results shall be submitted to the appropriate Ohio EPA district office or local air agency no later than thirty days after the completion of the test.

Effective: 08/24/2009

R.C. 119.032 review dates: 05/22/2009 and 08/24/2014

CERTIFIED ELECTRONICALLY
Certification

08/14/2009
Date

Promulgated Under: 119.03
Statutory Authority: 3704.03(E)
Rule Amplifies: 3704.03(A), 3704.03(E)
Prior Effective Dates: 7/9/91, 3/23/04

Chapter 3745-76: Control of Non-methane Organic Compound (NMOC) Emissions From Existing Landfills

Contact: Mike Hopkins 614-644-3611
Mike.Hopkins@epa.ohio.gov

3745-76-01 **Definitions.**

[Comment: For dates of non-regulatory government publications, publications of recognized organizations and associations, federal rules, and federal statutory provisions referenced in this rule, see the "Incorporation by Reference" section at the end of this rule.]

(A) Terms used but not defined in this chapter have the meaning given them in the Clean Air Act and in rule 3745-15-01 of the Administrative Code.

(B) The following definitions shall apply exclusively to this chapter.

(1) "Active collection system" means a gas collection system that uses gas mover equipment.

(2) "Active landfill" means a licensed and permitted landfill in which solid waste is being placed or a landfill that is planned to accept waste in the future.

(3) "Btu" means British thermal unit

(4) "Closed landfill" means a landfill in which solid waste is no longer being placed, and in which no additional solid wastes will be placed without first filing a notification of modification in accordance with 40 CFR 60.7(a)(4). Once a notification of modification has been filed, and additional solid waste is placed in the landfill, the landfill is no longer closed. .

(5) "Closure" means that point in time when a landfill becomes a closed landfill.

(6) "Commercial solid waste" means all types of solid waste generated by stores, offices, restaurants, ware-houses, and other non-manufacturing activities, excluding residential and industrial wastes.

(7) "Controlled landfill" means any landfill at which collection and control systems are required under this chapter as a result of the nonmethane organic compounds emission rate. The landfill is considered controlled at the time a collection and control system design plan is submitted in compliance with paragraph (B)(2)(a) of rule 3745-76-07 of the Administrative Code.

(8) "Design capacity" means the maximum amount of solid waste a landfill can accept, as indicated in terms of volume or mass in the most recent permit issued by the agency responsible for regulating the landfill, plus any in-place waste not accounted for in the most recent permit. If the owner or operator chooses to convert the design capacity from volume to mass or from mass to volume to demonstrate its design capacity is less than 2.5 million megagrams or 2.5 million cubic meters, the calculation must include a site specific density, which must be recalculated annually.

(9) "Disposal facility" means any contiguous land and structures, other appurtenances, and improvements on the land used for the disposal of solid waste.

(10) "Emission rate cutoff" means the threshold annual emission rate to which a landfill compares its estimated emission rate to determine if control under the regulation is required.

(11) "Enclosed combustor" means an enclosed firebox which maintains a relatively constant limited peak temperature generally using a limited supply of combustion air. An enclosed flare is considered an enclosed combustor.

(12) "Flare" means an open combustor without enclosure or shroud.

(13) "Gas mover equipment" means the equipment (i.e., fan, blower, compressor) used to transport landfill gas through the header system.

(14) "Household waste" means any solid waste (including garbage, trash, and sanitary waste in septic tanks) derived from households (including, but not limited to, single and multiple residences, hotels and motels, bunkhouses, ranger stations, crew quarters, campgrounds, picnic grounds, and day-use recreation areas).

(15) "Industrial solid waste" means solid waste generated by manufacturing or industrial processes that is not a hazardous waste regulated under Subtitle C of the Resource Conservation and Recovery Act, 40 CFR Part 264 and 40 CFR Part 265. Such waste may include, but is not limited to, waste resulting from the following manufacturing processes: electric power generation; fertilizer/agricultural chemicals; food and related products/by-products; inorganic chemicals; iron and steel manufacturing; leather and leather products; non-ferrous metals manufacturing/foundries; organic chemicals; plastics and resins manufacturing; pulp and paper industry; rubber and miscellaneous plastic products; stone, glass, clay, and concrete products; textile manufacturing; transportation equipment; and water treatment. This definition does not include mining waste or oil and gas waste.

(16) "Interior well" means any well or similar collection component located inside the perimeter of the landfill waste. A perimeter well located outside the landfilled waste is not an interior well.

(17) "Landfill" means an area of land or an excavation in which wastes are placed for permanent disposal, and that is not a land application unit, surface impoundment, injection well, or waste pile as those terms are defined under 40 CFR 257.2 .

(18) "Lateral expansion" means a horizontal expansion of the waste boundaries of an existing MSW landfill. A lateral expansion is not a modification unless it results in an increase in the design capacity of the landfill.

(19) "Modification" means an increase in the permitted volume design capacity of the landfill by either horizontal or vertical expansion based on its permitted design capacity as of May 30, 1991. Modification does not occur until the owner or operator commences construction on the horizontal or vertical expansion.

(20) "Municipal solid waste" is a type of solid waste generated from community, commercial and agricultural operations, including but not limited to the following:

(a) Solid waste generated by community operations (including single and multiple-household residences, hotels, motels, bunkhouses, ranger stations, crew quarters, campgrouds, and day-use recreation areas;

(b) Solid waste generated by commercial operations (including stores, offices, restaurants, warehouses, and other non-manufacturing activities);

(c) Solid waste generated from agricultural operations (including single-family and commercial farms, greenhouses, and nurseries);

(d) Sludge from municipal, commercial, or industrial waste water treatment plants, water treatment plants, and air pollution control facilities that is co-disposed with other municipal solid waste in a sanitary landfill facility; and

(e) Fly ash and bottom ash generated from the incineration of municipal solid waste, provided the fly ash and bottom ash is not regulated as a hazardous waste.

(21) "Municipal solid waste landfill" or "MSW landfill" means an entire disposal facility in a contiguous geographical space where household waste is placed in or on land. An MSW landfill may also receive other types of RCRA subtitle D wastes (40 CFR 257.2) such as commercial solid waste, nonhazardous sludge, conditionally exempt small quantity generator waste, and industrial solid waste. Portions of an MSW landfill may be separated by access roads. An MSW landfill may be publicly or privately owned. An MSW landfill may be a new MSW landfill, an existing MSW landfill, or a lateral expansion.

(22) "Municipal solid waste landfill emissions" or "MSW landfill emissions" means gas generated by the decomposition of organic waste deposited in an MSW landfill or derived from the evolution of organic compounds in the waste.

(23) "NMOC" means nonmethane organic compounds, as measured according to the provisions of rule 3745-76-09 of the Administrative Code.

(24) "Nondegradable waste" means any waste that does not decompose through chemical breakdown or microbiological activity. Examples are, but are not limited to, concrete, municipal waste combustor ash, and metals.

(25) "Passive collection system" means a gas collection system that solely uses positive pressure within the landfill to move the gas rather than using gas mover equipment.

(26) "PSD" means prevention of significant deterioration, as defined in 40 CFR 52.21, prevention of significant deterioration of air quality.

(27) "Sludge" means any solid, semisolid, or liquid waste generated from a municipal , commercial, or industrial waste-water treatment plant, water supply treatment plant, or air pollution control facility, exclusive of the treated effluent from a wastewater treatment plant.

(28) "Solid waste" means any garbage, sludge from a wastewater treatment plant, water supply treatment plant, or air pollution control facility and other discarded material, included solid, liquid, semisolid, or contained gaseous material resulting from industrial, commercial, mining, and agricultural operations, and from community activities, but does not include solid or dissolved material in domestic sewage, or solid or dissolved materials in irrigation return flows or industrial discharges that are point sources subject to permits under the national pollutant discharge elimination system or the United States nuclear regulatory commission.

(29) "Sufficient density" means any number, spacing, and combination of collection system components, including vertical wells, horizontal collectors, and surface collectors, necessary to maintain emission and migration control as determined by measures of performance set forth in this chapter.

(30) "Sufficient extraction rate" means a rate sufficient to maintain a negative pressure at all wellheads in the collection system without causing air infiltration, including any wellheads connected to the system as a result of expansion or excess surface emissions, for the life of the blower.

(31) Incorporation by reference. This chapter includes references to certain matter or materials. The text of the incorporated materials is not included in the regulations contained in this chapter. The materials are hereby made a part of the regulations in this chapter. For materials subject to change, only the specific version specified in the regulation are incorporated. Material is incorporated as it exists on the effective date of this rule. Except for subsequent annual publication of existing (unmodified) Code of Federal Regulation compilations, any amendment or revision to a referenced document is not incorporated unless and until this rule has been amended to specify the new dates.

(a) Availability. The materials incorporated by reference are available as follows:

(i) Clean Air Act. Information and copies may be obtained by writing to: "Superintendent of Documents, Attn: New Orders, P.O. Box 371954, Pittsburgh, PA 15250-7954." The full text of the Act as amended in 1990 is also available in electronic format at www.epa.gov/oar/caa/. A copy of the Act is also available for inspection and copying at most public libraries and "The State Library of Ohio."

(ii) Code of Federal Regulations (CFR). Information and copies may be obtained by writing to: "Superintendent of Documents, Attn: New Orders, PO Box 371954, Pittsburgh, PA 15250-7954." The full text of the CFR is also available in electronic format at http://www.gpoaccess.gov/cfr/retrieve.html . The CFR compilations are also available for inspection and copying at most public libraries and "The State Library of Ohio."

(iii) Compilation of Air Pollutant Emission Factors, AP-42. Information and copies may be obtained by writing to: "Superintendent of Documents, Attn: New Orders, PO Box 371954, Pittsburgh, PA 15250-7954." The full text of the compilation of air pollutant emission factors, AP-42, is also available in electronic format at http://www.epa.gov/ttn/chief/ap42/. The compilation of air pollutant emission factors, AP-42, are also available for inspection and copying at most public libraries and "The State Library of Ohio."

(b) Incorporated materials:

(i) ASTM D1946-90; "Standard Practice for Analysis of Reformed Gas by Gas Chromatography;" 2000.

(ii) ASTM D4809-00; "Standard Test Method for Heat of Combustion of Liquid Hydrocarbon Fuels by Bomb Calorimeter (Precision Method);" 2005.

(iii) Method 2; "Determination of stack gas velocity and volumetric flow rate (type 'S' pitot tube);" 40 CFR Part 60, Appendix A-1, as published in the July 1, 2005 Code of Federal Regulations.

(iv) Method 2A; "Direct measurement of gas volume through pipes and small ducts;" 40 CFR. Part 60, Appendix A-1, as published in the July 1, 2005 Code of Federal Regulations.

(v) Method 2C; "Determination of gas velocity and volumetric flow rate in small stacks or ducts (standard pitot tube);" 40 ... Part 60, Appendix A-1, as published in the July 1, 2005 Code of Federal Regulations.

(vi) Method 2D; "Measurement of gas volume flow rates in small pipes and ducts;" 40 CFR. Part 60, Appendix A-1, as published in the July 1, 2005 Code of Federal Regulations.

(vii) Method 2E; "Determination of landfill gas production flow rate;" 40 CF. Part 60, Appendix A-1, as published in the July 1, 2005 Code of Federal Regulations.

(viii) Method 3A; "Determination of oxygen and carbon dioxide concentrations in emissions from stationary sources (instrumental analyzer procedure);" 40CFR. Part 60, Appendix A-2, as published in the July 1, 2005 Code of Federal Regulations.

(ix) Method 3C; "Determination of carbon dioxide, methane, nitrogen, and oxygen from stationary sources;" 40CFR. Part 60, Appendix A-2, as published in the July 1, 2005 Code of Federal Regulations.

(x) Method 18; "Measurement of gaseous organic compound emissions by gas chromatography;" 40CFR. Part 60, Appendix A-6, as published in the July 1, 2005 Code of Federal Regulations.

(xi) Method 21; "Determination of volatile organic compound leaks;" 40CFR. Part 60, Appendix A-7, as published in the July 1, 2005 Code of Federal Regulations.

(xii) Method 25; "Determination of total gaseous nonmethane organic emissions as carbon;" 40CFR. Part 60, Appendix A-7, as published in the July 1, 2005 Code of Federal Regulations.

(xiii) Method 25A; "Determination of total gaseous organic concentration using a flame ionization analyzer;" 40CFR. Part 60, Appendix A-7, as published in the July 1, 2005 Code of Federal Regulations.

(xiv) Method 25C; "Determination of nonmethane organic compounds (NMOC) in MSW landfill gases;" 40 ..R. Part 60, Appendix A-7, as published in the July 1, 2005 Code of Federal Regulations.

(xv) 40 CFR Part 60, Subpart Cc, "Emission Guidelines and Compliance Times for Municipal Solid Waste Landfills;" 61 FR 9919, March 12, 1996, as amended at 63 FR 32750, June 16, 1998.

(xvi) 40 CFR Part 60, Subpart WWW, "Standards of Performance for Municipal Solid Waste Landfills;" 61 FR 9919, March 12, 1996, as amended at 63 FR 32753, June 16, 1998; 64 FR 9262, February 24, 1999; 65 FR 18909, April 10, 2000.

(xvii) 40 CFR Part 264, "Standards for Owners and Operators of Hazardous Waste Treatment, Storage, and Disposal Facilities;" as published in the July 1, 2005 Code of Federal Regulations.

(xviii) 40 CFR Part 265,_"Interim Status Standards for Owners and Operators of Hazardous Waste Treatment, Storage, and Disposal Facilities;" as published in the July 1, 2005 Code of Federal Regulations.

(xix) 40 CFR Part 258, "Criteria for Municipal Solid Waste Landfills;" 56 FR 51016, October 9, 1991, as amended at 58 FR 51546, October 1, 1993; 60 FR 52342, October 6, 1995; 61 FR 50413, September 25, 1996.

(xx) 40 FR 258.40_"Design Criteria for Municipal Solid Waste Landfills;", as published in the July 1, 2005 Code of Federal Regulations.

Effective: 10/10/2006

R.C. 119.032 review dates: 07/12/2006 and 10/10/2011

CERTIFIED ELECTRONICALLY
Certification

09/29/2006
Date

Promulgated Under: 119.03
Statutory Authority: ORC 3704.03(E)
Rule Amplifies: ORC 3704.03(A), ORC 3704.03(E)
Prior Effective Dates: 11/16/99, 1/31/98

3745-76-02 **Designated facilities.**

[Comment: For dates of non-regulatory government publications, publications of recognized organizations and associations, federal rules, and federal statutory provisions referenced in this rule, see the last paragraph of rule 3745-76-01 of the Administrative Code titled "Incorporation by reference."]

(A) The designated facility to which this rule applies is each existing MSW landfill for which construction, reconstruction or a modification resulting in increased disposal capacity was commenced before May 30, 1991.

[Comment: Any MSW landfill which, through construction, reconstruction, or modification, increases the disposal capacity of the landfill after May 30, 1991 is not subject to these rules, which regulate landfills subject to United States environmental protection agency's emission guidelines for landfills installed or expanded before this date under 40 CFR Part 60, Subpart Cc, but instead would be subject to the standards of performance for MSW landfills found in 40 CFR Part 60, Subpart WWW.]

(B) Physical or operational changes made to an existing MSW landfill solely to comply with this rule are not considered a modification under Chapter 3745-31 of the Administrative Code.

Effective: 10/10/2006

R.C. 119.032 review dates: 07/12/2006 and 10/10/2011

CERTIFIED ELECTRONICALLY
Certification

09/29/2006
Date

Promulgated Under: 119.03
Statutory Authority: ORC3704.03(E)
Rule Amplifies: ORC3704.03(A), ORC3704.03(E)
Prior Effective Dates: 1/31/98

3745-76-03 **Control requirements for municipal solid waste landfills.**

(A) MSW landfill emissions shall be controlled at each MSW landfill meeting the following three conditions:

(1) The landfill has accepted waste at any time since November 8, 1987, or has additional design capacity available for future waste deposition;

(2) The landfill has a design capacity greater than or equal to 2.5 million megagrams or 2.5 million cubic meters. The landfill may calculate design capacity in either megagrams or cubic meters for comparison with the exemption values. Any density conversions shall be documented and submitted with the report; and

(3) The landfill has a nonmethane organic compound emission rate of fifty megagrams per year or more.

(B) Each MSW landfill meeting the conditions in paragraph (A) of this rule shall install a collection and control system meeting the conditions provided in paragraph (B)(2)(b) of rule 3745-76-07 of the Administrative Code.

(C) Collected MSW landfill emissions shall be controlled through the use of control devices meeting the requirements of paragraph (C)(1), (C)(2), or (C)(3) of this rule.

(1) An open flare designed and operated in accordance with the parameters established in rule 3745-76-15 of the Administrative Code; or

(2) A control system designed and operated to reduce NMOC by ninety-eight weight per cent; or

(3) An enclosed combustor designed and operated to reduce the outlet NMOC concentration to twenty parts per million as hexane by volume, dry basis at three per cent oxygen, or less.

Effective: 10/10/2006

R.C. 119.032 review dates: 07/12/2006 and 10/10/2011

CERTIFIED ELECTRONICALLY
Certification

09/29/2006
Date

Promulgated Under: 119.03
Statutory Authority: ORC3704.03(E)
Rule Amplifies: ORC3704.03(A), ORC.3704.03(E)
Prior Effective Dates: 1/31/98

3745-76-04 **Test methods and procedures.**

Each landfill having a design capacity greater than or equal to 2.5 million megagrams or 2.5 million cubic meters shall calculate the NMOC emission rate as required in rule 3745-76-09 of the Administrative Code. If the NMOC emission rate is calculated to be fifty megagrams or more per year, the owner or operator shall comply with all of the applicable rules in the Administrative Code, including but not limited to the collection and control system requirements in rule 3745-76-07 of the Administrative Code; the operational standards for the control and collection system in rule 3745-76-08 of the Administrative Code; the compliance provisions in rule 3745-76-10 of the Administrative Code; the monitoring provisions in rule 3745-76-11 of the Administrative Code; the reporting requirements in rule 3745-76-12 of the Administrative Code; and the record keeping requirements of rule 3745-76-13 of the Administrative Code. An active collection system shall also meet the requirements of rule 3745-76-14 of the Administrative Code and a flare shall meet the requirements of rule 3745-76-15 of the Administrative Code.

Effective: 10/10/2006

R.C. 119.032 review dates: 07/12/2006 and 10/10/2011

CERTIFIED ELECTRONICALLY
Certification

09/29/2006
Date

Promulgated Under: 119.03
Statutory Authority: ORC3704.03(E)
Rule Amplifies: ORC3704.03(A), ORC3704.03(E)
Prior Effective Dates: 1/31/98

Rule 3745-76-05: Rescinded as of October 10, 2006

3745-76-06 **Compliance times.**

(A) Except as provided for under paragraph (B) of this rule, planning, awarding of contracts, and installation of MSW landfill air emission collection and control equipment capable of meeting the emission guidelines established under rule 3745-76-03 of the Administrative Code shall be accomplished within thirty months after the date the initial NMOC emission rate report shows NMOC emissions to equal or exceed fifty megagrams per year.

(B) For each existing MSW landfill meeting the conditions in paragraph (A)(1) of rule 3745-76-03 of the Administrative Code and paragraph (A)(2) of rule 3745-76-03 of the Administrative Code whose NMOC emission rate is less than fifty megagrams per year on the initial effective date of this chapter, installation of collection and control systems capable of meeting rule 3745-76-03 of the Administrative Code shall be accomplished within thirty months of the date when the condition in paragraph (A)(3) of rule 3745-76-03 of the Administrative Code is met (i.e., the date of the first annual nonmethane organic compounds emission rate report which equals or exceeds fifty megagrams per year).

Effective: 10/10/2006

R.C. 119.032 review dates: 07/12/2006 and 10/10/2011

CERTIFIED ELECTRONICALLY
Certification

09/29/2006
Date

Promulgated Under: 119.03
Statutory Authority: ORC3704.03(E)
Rule Amplifies: ORC3704.03(A), ORC3704.03(E)
Prior Effective Dates: 1/31/98, 11/16/99

3745-76-07 **Standards for air emissions from municipal waste landfills.**

[Comment: For dates of non-regulatory government publications, publications of recognized organizations and associations, federal rules, and federal statutory provisions referenced in this rule, see the last paragraph of rule 3745-76-01 of the Administrative Code titled "Incorporation by reference."]

(A) Each owner or operator of an MSW landfill having a design capacity less than 2.5 million megagrams by mass or 2.5 million cubic meters by volume shall submit an initial design capacity report to the director as provided in paragraph (A) of rule 3745-76-12 of the Administrative Code. The landfill may calculate design capacity in either megagrams or cubic meters for comparison with the exemption values. Any density conversions shall be documented and submitted with the report. Submittal of the initial design capacity report shall fulfill the requirements of this chapter except as provided for in paragraphs (A)(1) and (A)(2) of this rule.

(1) The owner or operator shall submit to the director an amended design capacity report, as provided for in paragraph (A)(3) of rule 3745-76-12 of the Administrative Code.

(2) When an increase in the maximum design capacity of a landfill exempted from the provisions of paragraph (B) of rule 3745-76-07 of the Administrative Code to rule 3745-76-14 of the Administrative Code on the basis of the design capacity exemption in paragraph (A) of this rule results in a revised maximum design capacity equal to or greater than 2.5 million megagrams and 2.5 million cubic meters, the owner or operator shall comply with the provision of paragraph (B) of this rule.

(B) Each owner or operator of an MSW landfill having a design capacity equal to or greater than 2.5 million megagrams and 2.5 million cubic meters, shall either comply with paragraph (B)(2) of this rule or calculate an NMOC emission rate for the landfill using the procedures specified in rule 3745-76-09 of the Administrative Code. The NMOC emission rate shall be recalculated annually, except as provided in paragraph (B)(1)(b) of rule 3745-76-12 of the Administrative Code. The owner or operator of an MSW landfill subject to this chapter with a design capacity greater than or equal to 2.5 million megagrams and 2.5 million cubic meters is required to obtain a Title V permit.

(1) If the calculated NMOC emission rate is less than fifty megagrams per year, the owner or operator shall:

(a) Submit an annual emission report to the director, except as provided for in paragraph (B)(1)(b) of rule 3745-76-12 of the Administrative Code; and

(b) Recalculate the NMOC emission rate annually using the procedures specified in paragraph (A)(1) of rule 3745-76-09 of the Administrative Code until such time as the calculated NMOC emission rate is equal to or greater than fifty megagrams per year, or the landfill is closed.

(i) If the NMOC emission rate, upon recalculation required in paragraph (B)(1)(b) of this rule, is equal to or greater than fifty megagrams per year, the owner or operator shall install a collection and control system in compliance with paragraph (B)(2) of this rule.

(ii) If the landfill is permanently closed, a closure notification shall be submitted to the director as provided for in paragraph (D) of rule 3745-76-12 of the Administrative Code.

(2) If the calculated NMOC emission rate is equal to or greater than fifty megagrams per year, the owner or operator shall:

(a) Submit a collection and control system design plan prepared by a professional engineer to the director within one year:

(i) The collection and control system as described in the plan shall meet the design requirements of paragraph (B)(2)(b) of this rule.

(ii) The collection and control system design plan shall include any alternatives to the operational standards, test methods, procedures, compliance measures, monitoring, recordkeeping or reporting provisions of rule 3745-76-08 of the Administrative Code to 3745-76-13 of the Administrative Code proposed by the owner or operator.

(iii) The collection and control system design plan shall either conform with specifications for active collection systems in rule 3745-76-14 of the Administrative Code or include a demonstration to the director's satisfaction of the sufficiency of the alternative provisions to rule 3745-76-14 of the Administrative Code.

(iv) The director shall review the information submitted under paragraphs (B)(2)(a)(i), (B)(2)(a)(ii) and (B)(2)(a)(iii) of this rule and either approve it, disapprove it, or request that additional information be submitted. Because of the many site-specific factors involved with landfill gas system design, alternative systems may be necessary. A wide variety of system designs are possible, such as vertical wells, combination horizontal and vertical collection systems, or horizontal trenches only, leachate collection components, and passive systems.

(b) Install a collection and control system that captures the gas generated within the landfill as required under paragraph (B)(2)(b)(i) or (B)(2)(b)(ii) and

paragraph (B)(2)(c) of this rule within thirty months after the first annual report in which the emission rate equals or exceeds fifty megagrams per year, unless tier two or tier three sampling demonstrates that the emission rate is less than fifty megagrams per year as specified in paragraph (C)(1) or (C)(2) of rule 3745-76-12 of the Administrative Code.

(i) An active collection system shall:

(a) Be designed to handle the maximum expected gas flow rate from the entire area of the landfill that warrants control over the intended use period of the gas control or treatment system equipment;

(b) Collect gas from each area in the landfill where:

(i) Municipal solid waste has been placed for five years or more; or

(ii) Acceptance of municipal solid waste has ceased for at least two years;

(c) Collect gas at a sufficient extraction rate;

(d) Be designed to minimize off-site migration of subsurface gas.

(ii) A passive collection system shall:

(a) Comply with the provisions specified in paragraphs (B)(2)(b)(i)(a), (B)(2)(b)(i)(b), and (b)(2)(b)(i)(d) of this rule.

(b) Be installed with composite liners on the bottom and all sides in all areas in which gas is to be collected. The composite liners shall be designed and installed in accordance with 40 CFR 258.40 and the requirements contained in rules 3745-27-06 and 3745-27-07 of the Administrative Code.

(c) Route all the collected gas to a control system that complies with the requirements in either paragraph (B)(2)(c)(i), (B)(2)(c)(ii) or (B)(2)(c)(iii) of this rule.

(i) An open flare designed and operated in accordance with rule 3745-76-15 of the Administrative Code;

(ii) A control system designed and operated to reduce NMOC by ninety eight weight-percent, or, when an enclosed combustion device is used for control, to either reduce NMOC by ninety eight weight percent or reduce the outlet NMOC concentration to less than twenty parts per

million by volume, dry basis as hexane at three percent oxygen. The reduction efficiency or parts per million by volume shall be established by an initial performance test to be completed no later than one hundred eighty days after the initial startup of the approved control system, using the test methods specified in paragraph (D) of rule 3745-76-09 of the Administrative Code.

(a) If a boiler or process heater is used as the control device, the landfill gas stream shall be introduced into the flame zone.

(b) The control device shall be operated within the parameter ranges established during the initial or most recent performance test. The operating parameters to be monitored are specified in rule 3745-76-11 of the Administrative Code;

(iii) Route the collected gas to a treatment system that processes the collected gas for subsequent sale or use. All emissions from any atmospheric vent from the gas treatment system shall be subject to the requirements of paragraph (B)(2)(c)(i) or (B)(2)(c)(ii) of this rule.

(d) Operate the collection and control device installed to comply with this chapter in accordance with the provisions of rules 3745-76-08, 3745-76-10, and 3745-76-11 of the Administrative Code.

(e) The collection and control system may be capped or removed provided that all the conditions of paragraphs (B)(2)(e)(i), (B)(2)(e)(ii), and (B)(2)(e)(iii) of this rule are met:

(i) The landfill shall be a closed landfill as defined in rule 3745-76-01 of the Administrative Code. A closure report shall be submitted to the director as provided in paragraph (D) of rule 3745-76-12 of the Administrative Code;

(ii) The collection and control system shall have been in operation a minimum of fifteen years from when the first well was installed and put into operation; and

(iii) Following the procedures specified in paragraph (B) of rule 3745-76-09 of the Administrative Code, the calculated NMOC gas produced by the landfill shall be less than fifty megagrams per year on three successive test dates. The test dates shall be no less than ninety days apart, and no more than one hundred eighty days apart.

(C) For purposes of obtaining an operating permit under Title V of the Clean Air Act, the owner or operator of a MSW landfill subject to this chapter with a design capacity less than 2.5 million megagrams or 2.5 million cubic meters is not subject to the

requirement to obtain an operating permit for the landfill under Title V, unless the landfill is otherwise subject to Title V. For purposes of submitting a timely application of an operating permit under Title V, the owner or operator of a MSW landfill subject to this chapter with a design capacity greater than or equal to 2.5 million megagrams and 2.5 million cubic meters, and not otherwise subject to Title V, becomes subject to the requirements of Title V regardless of when the design capacity report is actually submitted, no later than:

(1) June 10, 1996 for MSW landfills that commenced construction, modification, or reconstruction on or after May 30, 1991 but before March 12, 1996;

(2) Ninety days after the date of commenced construction, modification, or reconstruction for MSW landfills that commence construction, modification, or reconstruction on or after March 12, 1996.

(D) When a MSW landfill subject to this chapter is closed, the owner or operator is no longer subject to the requirement to maintain an operating permit under Title V for the landfill if the landfill is not otherwise subject to the requirements of Title V and if either of the following conditions are met:

(1) The landfill was never subject to the requirement for a control system under paragraph (B)(2) of this rule; or

(2) The owner or operator meets the conditions for control system removal specified in paragraph (B)(2)(e) of this rule.

Effective: 10/10/2006

R.C. 119.032 review dates: 07/12/2006 and 10/10/2011

CERTIFIED ELECTRONICALLY
Certification

09/29/2006
Date

Promulgated Under: 119.03
Statutory Authority: ORC3704.03(E)
Rule Amplifies: ORC3704.03(A), ORC3704.03(E)
Prior Effective Dates: 1/31/98, 11/16/99

3745-76-08 **Operational standards for collection and control systems.**

[Comment: For dates of non-regulatory government publications, publications of recognized organizations and associations, federal rules, and federal statutory provisions referenced in this rule, see the last paragraph of rule 3745-76-01 of the Administrative Code titled "Incorporation by reference."]

Each owner or operator of an MSW landfill with a gas collection and control system used to comply with the provisions of paragraph (B)(2)(b) of rule 3745-76-07 of the Administrative Code shall:

(A) Operate the collection system such that gas is collected from each area, cell, or group of cells in the MSW landfill in which solid waste has been in place for :

(1) Five years or more if active; or

(2) Two years or more if closed or at final grade.

(B) Operate the collection system with negative pressure at each wellhead except under the following conditions:

(1) A fire or increased well temperature. The owner or operator shall record instances when positive pressure occurs in efforts to avoid a fire. These records shall be submitted with the annual reports as provided in paragraph (F)(1) of rule 3745-76-12 of the Administrative Code;

(2) Use of a geomembrane or synthetic cover. The owner or operator shall develop acceptable pressure limits in the design plan;

(3) A decommissioned well. A well may experience a static positive pressure after shut down to accommodate for declining flows. All design changes shall be approved by the director;

(C) Operate each interior wellhead in the collection system with a landfill gas temperature less than fifty five degrees Celsius and with either a nitrogen level less than twenty percent or an oxygen level less than five per cent. The owner or operator may establish a higher operating temperature, nitrogen, or oxygen value at a particular well. A higher operating value demonstration shall show supporting data that the elevated parameter does not cause fires or significantly inhibit anaerobic decomposition by killing methanogens.

(1) The nitrogen level shall be determined using Method 3C of Appendix A of 40 CFR Part 60, unless an alternative test method is established as allowed by paragraph (B)(2)(a) of rule 3745-76-07 of the Administrative Code.

(2) Unless an alternative test method is established as allowed by paragraph (B)(2)(a) of rule 3745-76-07 of the Administrative Code, the oxygen shall be determined by an oxygen meter using Method 3A of Appendix A of 40 CFR Part 60 except that:

(a) The span shall be set so that the regulatory limit is between twenty and fifty per cent of the span;

(b) A data recorder is not required;

(c) Only two calibration gases are required, a zero and span, and ambient air may be used as the span;

(d) A calibration error check is not required;

(e) The allowable sample bias, zero drift, and calibration drift are plus or minus ten per cent.

(D) Operate the collection system so that the methane concentration is less than five hundred parts per million above background at the surface of the landfill. To determine if this level is exceeded, the owner or operator shall conduct surface testing around the perimeter of the collection area and along a pattern that traverses the landfill at thirty meter intervals and where visual observations indicate elevated concentrations of landfill gas, such as distressed vegetation and cracks or seeps in the cover. The owner or operator may establish an alternative traversing pattern that ensures equivalent coverage. A surface monitoring design plan shall be developed that includes a topographical map with the monitoring route and the rationale for any site-specific deviations from the thirty meter intervals. Areas with steep slopes or other dangerous areas may be excluded from the surface testing.

(E) Operate the system such that all collected gases are vented to a control system designed and operated in compliance with paragraph (B)(2)(c) of rule 3745-76-07 of the Administrative Code. In the event the collection or control system is inoperable, the gas mover system shall be shut down and all valves in the collection and control system contributing to venting of the gas to the atmosphere shall be closed within one hour; and

(F) Operate the control or treatment system at all times when the collected gas is routed to the system.

(G) If monitoring demonstrates that the operational requirements in paragraph (B), (C), or (D) of this rule are not met, corrective action shall be taken as specified in paragraphs (A)(3) to (A)(5) of rule 3745-76-10 of the Administrative Code or paragraph (C) of rule 3745-76-10 of the Administrative Code. If corrective actions are taken as specified in rule 3745-76-10 of the Administrative Code, the monitored exceedance is not a violation of the operational requirements in this rule.

Effective: 10/10/2006

R.C. 119.032 review dates: 07/12/2006 and 10/10/2011

CERTIFIED ELECTRONICALLY
Certification

09/29/2006
Date

Promulgated Under: 119.03
Statutory Authority: ORC3704.03(E)
Rule Amplifies: ORC3704.03(A), ORC3704.03(E)
Prior Effective Dates: 1/31/98, 11/16/99

3745-76-09 **Test methods and procedures.**

[Comment: For dates of non-regulatory government publications, publications of recognized organizations and associations, federal rules, and federal statutory provisions referenced in this rule, see the last paragraph of rule 3745-76-01 of the Administrative Code titled "Incorporation by reference."]

(A)

(1) The landfill owner or operator shall calculate the NMOC emission rate using either the equation provided in paragraph (A)(1)(a) of this rule or the equation provided in paragraph (A)(1)(b) of this rule. Both equations may be used if the actual year-to-year solid waste acceptance rate is known, as specified in paragraph (A)(1)(a) of this rule, for part of the life of the landfill and the actual year-to-year solid waste acceptance rate is unknown, as specified in paragraph (A)(1)(b) of this rule, for part of the life of the landfill. The values to be used in both equations are 0.05 per year for k, one hundred seventy cubic meters per megagram for L_o, and four thousand parts per million by volume as hexane for the C_{NMOC} . For landfills located in geographical areas with a thirty year annual average precipitation of less than twenty five inches, as measured at the nearest representative official meteorologic site, the k value to be used is 0.02 per year.

(a) The following equation shall be used if the actual year-to-year solid waste acceptance rate is known.

$$M_{NMOC} = \sum_{i=1}^{n} 2kL_0M_i(e^{-kt_i})(C_{NMOC})(3.6\times10^{-9})$$

Where, M_{NMOC} = total NMOC emission rate from the landfill, megagrams per year

k = methane generation rate constant, $year^{-1}$

L_o = methane generation potential, cubic meters per megagram solid waste

M_i = mass of solid waste in the ith section, megagrams

t_i = age of the ith section, years

C_{NMOC} = concentration of NMOC, parts per million by volume as hexane

3.6×10^{-9} = conversion factor

The mass of nondegradable solid waste may be subtracted from the total mass of solid waste in a particular section of the landfill when calculating

the value for M_i if documentation of the nature and amount of such wastes is maintained.

(b) The following equation shall be used if the actual year-to-year solid waste acceptance rate is unknown.

$$M_{NMOC} = 2L_oR\ (e^{-kc}-e^{-kt})\ (C_{NMOC})\ (3.6 \times 10^{-9})$$

Where,

M_{NMOC} = mass emission rate of NMOC, megagrams per year

L_o = methane generation potential, cubic meters per megagram solid waste

R = average annual acceptance rate, megagrams per year

k = methane generation rate constant, $year^{-1}$

t = age of landfill, years

C_{NMOC} = concentration of NMOC, parts per million by volume as hexane

c = time since closure, years. For active landfill c = 0 and e^{-kc} =1

3.6×10^{-9} = conversion factor

The mass of nondegradable solid waste may be subtracted from the average annual acceptance rate when calculating a value for R, if documentation of the nature and amount of such wastes is maintained.

(2) Tier 1. The owner or operator shall compare the calculated NMOC mass emission rate to the standard of fifty megagrams per year.

(a) If the NMOC emission rate calculated in paragraph (A)(1) of this rule is less than fifty megagrams per year, then the landfill owner shall submit an emission rate report as provided in paragraph (B)(1) of rule 3745-76-12 of the Administrative Code, and shall recalculate the NMOC mass emission rate annually as required under paragraph (B)(1) of rule 3745-76-07 of the Administrative Code.

(b) If the calculated NMOC emission rate is equal to or greater than fifty megagrams per year, then the landfill owner shall either comply with paragraph (B)(2) of rule 3745-76-07 of the Administrative Code, or determine a site-specific NMOC concentration and recalculate the NMOC emission rate using the procedures provided in paragraph (A)(3) of this rule.

(3) Tier 2. The landfill owner or operator shall determine the NMOC concentration using the following sampling procedure. The landfill owner or operator shall install at least two sample probes per hectare of landfill surface that has retained waste for at least two years. If the landfill is larger than twenty five hectares in area, only fifty samples are required. The sample probes should be located to avoid known areas of nondegradable solid waste. The owner or operator shall collect and analyze one sample of landfill gas from each probe to determine the NMOC concentration using Method 25 or Method 25C of Appendix A of 40 CFR Part 60. Method 18 of Appendix A of 40 CFR Part 60 may be used to analyze the samples collected by the Method 25 or 25C sampling procedure. . If more than the required number of samples are taken, all samples shall be used in the analysis. The landfill owner or operator shall divide the NMOC concentration from Method 25 or Method 25C of Appendix A of 40 CFR part 60 by six to convert from C_{NMOC} as carbon to C_{NMOC} as hexane.

(a) Taking composite samples from different probes into a single cylinder is allowed; however, equal sample volumes must be taken from each probe. For each composite, the sampling rate, collection times, beginning and ending cylinder vacuums, or alternative volume measurements must be recorded to verify that composite volumes are equal. Composite sample volumes should not be less than one liter, unless evidence can be provided to substantiate the accuracy of smaller volumes. The compositing shall be terminated before the cylinder approaches ambient pressure where measurement accuracy diminishes.

(b) If using Method 18, the owner or operator must identify all compounds in the sample, and, at a minimum, test for those compounds published in the most recent "Compilation of Air Pollutant Emission Factors (AP-42)", minus carbon monoxide, hydrogen sulfide, and mercury. At a minimum, the instrument must be calibrated for each of the compounds on the list. The concentration of each Method 18 compound shall be converted to C_{NMOC} as hexane by multiplying it by the ratio of its carbon atoms divided by six.

(c) If the landfill has an active or passive gas removal system in place, Method 25 or Method 25C samples may be collected from these systems instead of surface probes, provided the removal system can be shown to provide sampling as representative as the two sampling probe per hectare requirement. For active collection systems, samples may be collected from the common header pipe before the gas moving or condensate removal equipment. For these systems, a minimum of three samples must be collected from the header pipe.

(d) The landfill owner or operator shall recalculate the NMOC mass emission rate using the equations provided in paragraph (A)(1)(a) or (A)(1)(b) of this rule and using the average NMOC concentration from the collected samples

instead of the default value in the equation provided in paragraph (A)(1) of this rule.

(e) If the resulting mass emission rate calculated using the site-specific NMOC concentration is equal to or greater than fifty megagrams per year, then the landfill owner or operator shall either comply with paragraph (B)(2) of rule 3745-76-07 of the Administrative Code, or determine the site-specific methane generation rate constant and recalculate the NMOC emission rate using the site-specific methane generation rate using the procedure specified in paragraph (A)(4) of this rule.

(f) If the resulting NMOC mass emission rate is less than fifty megagrams per year, the owner or operator shall submit a periodic estimate of the emission rate report as provided in paragraph (B)(1) of rule 3745-76-12 of the Administrative Code and retest the site-specific NMOC concentration every five years using the methods specified in this rule.

(4) Tier 3. The site-specific methane generation rate constant shall be determined using the procedures provided in Method 2E of Appendix A of 40 CFR Part 60. The landfill owner or operator shall estimate the NMOC mass emission rate using equations in paragraph (A)(1)(a) or (A)(1)(b) of this rule and using a site-specific methane generation rate constant k, and the site-specific NMOC concentration as determined in paragraph (A)(3) of this rule instead of the default values provided in paragraph (A)(1) of this rule. The landfill owner or operator shall compare the resulting NMOC mass emission rate to the standard of fifty megagrams per year.

(a) If the NMOC mass emission rate as calculated using the site-specific methane generation rate and concentration of NMOC is equal to or greater than fifty megagrams per year, the owner or operator shall comply with paragraph (B)(2) of rule 3745-76-07 of the Administrative Code.

(b) If the NMOC mass emission rate is less than fifty megagrams per year, then the owner or operator shall submit a periodic emission rate report as provided in paragraph (B)(1) of rule 3745-76-12 of the Administrative Code and shall recalculate the NMOC mass emission rate annually, as provided in paragraph (B)(1) of rule 3745-76-12 of the Administrative Code using the equations in paragraph (A)(1) of this rule and using the site-specific methane generation rate constant and NMOC concentration obtained in paragraph (A)(3) of this rule. The calculation of the methane generation rate constant is performed only once, and the value obtained from this test shall be used in all subsequent annual NMOC emission rate calculations.

(5) The owner or operator may use other methods to determine the NMOC concentration or a site-specific k as an alternative to the methods required in

paragraphs (A)(3) and (A)(4) of this rule if the method has been approved by the director.

(B) After the installation of a collection and control system in compliance with rule 3745-76-10 of the Administrative Code, the owner or operator shall calculate the NMOC emission rate for purposes of determining when the system can be removed as provided in paragraph (B)(2)(e) of rule 3745-76-07 of the Administrative Code, using the following equation:

$$M_{NMOC} = 1.89 \times 10^{-3} Q_{LFG} C_{NMOC}$$

Where,

M_{NMOC} = mass emission rate of NMOC, megagrams per year

Q_{LFG} = flow rate of landfill gas, cubic meters per minute

C_{NMOC} = NMOC concentration, parts per million by volume as hexane

(1) The flow rate of landfill gas, Q_{LFG} shall be determined by measuring the total landfill gas flow rate at the common header pipe that leads to the control device using a gas flow measuring device calibrated according to the provisions of section 4 of Method 2E of Appendix A of 40 CFR Part 60.

(2) The average NMOC concentration, C_{NMOC}, shall be determined by collecting and analyzing landfill gas sampled from the common header pipe before the gas moving or condensate removal equipment using the procedures in Method 25C or Method 18 of Appendix A of 40 CFR Part 60. If using Method 18 of Appendix A of 40 CFR Part 60, the minimum list of compounds to be tested shall be those published in the most recent "Compilation of Air Pollutant Emission Factors (AP-42)". The sample location on the common header pipe shall be before any condensate removal or other gas refining units. The landfill owner or operator shall divide the NMOC concentration from Method 25C of Appendix A of 40 CFR Part 60 by six to convert from C_{NMOC} as carbon to C_{NMOC} as hexane.

(3) The owner or operator may use another method to determine landfill gas flow rate and NMOC concentration if the method has been approved by the director.

(C) When calculating emissions for PSD purposes, the owner or operator of each MSW landfill subject to the provisions of this chapter shall estimate the NMOC emission rate for comparison to the major stationary source and significant levels in rule 3745-31-01 of the Administrative Code using AP-42 or other approved measurement procedures. If a collection system, which complies with the provisions in paragraph (B)(2) of rule 3745-76-07 of the Administrative Code is already installed, the owner

or operator shall estimate the NMOC emission rate using the procedures provided in paragraph (B) of this rule.

(D) For the performance test required in paragraph (B)(2)(c)(ii) of rule 3745-76-07 of the Administrative Code, Method 25C or Method 18 of appendix A of 40 CFR Part 60 shall be used to determine compliance with ninety eight weight-per cent efficiency or the twenty parts per million volume outlet concentration level, unless another method to demonstrate compliance has been approved by the director as provided by paragraph (B)(2)(a)(ii) of rule 3745-76-07 of the Administrative Code. If using Method 18 of Appendix A of 40 CFR Part 60, the minimum list of compounds to be tested shall be those published in the most recent "Compilation of Air Pollutant Emission Factors (AP-42)". The following equation shall be used to calculate efficiency:

Control efficiency = $(NMOC_{IN} - NMOC_{OUT}) / (NMOC_{IN})$

Where,

$NMOC_{IN}$ = mass of NMOC entering control device

$NMOC_{OUT}$ = mass of NMOC exiting control device

Effective: 10/10/2006

R.C. 119.032 review dates: 07/12/2006 and 10/10/2011

CERTIFIED ELECTRONICALLY
Certification

09/29/2006
Date

Promulgated Under: 119.03
Statutory Authority: ORC3704.03(E)
Rule Amplifies: ORC3704.03(A), ORC3704.03(E)
Prior Effective Dates: 1/31/98, 11/16/99

3745-76-10 **Compliance provisions.**

[Comment: For dates of non-regulatory government publications, publications of recognized organizations and associations, federal rules, and federal statutory provisions referenced in this rule, see the last paragraph of rule 3745-76-01 of the Administrative Code titled "Incorporation by reference."]

(A) Except as provided in paragraph (B)(2)(a)(ii) of rule 3745-76-07 of the Administrative Code, the specified methods in paragraphs (A)(1) to (A)(6) of this rule shall be used to determine whether the gas collection system is in compliance with paragraph (B)(2)(b) of rule 3745-76-07 of the Administrative Code.

(1) For the purposes of calculating the maximum expected gas generation flow rate from the landfill to determine compliance with paragraph (B)(2)(b)(i)(a) of rule 3745-76-07 of the Administrative Code, one of the following equations shall be used. The k and l_o kinetic factors should be those published in the most recent "Compilation of Air Pollutant Emission Factors (AP-42)" or other site specific values demonstrated to be appropriate and approved by the director. If k has been determined as specified in paragraph (A)(4) of rule 3745-76-09 of the Administrative Code, the value of k determined from the test shall be used. A value of no more than fifteen years shall be used for the intended use period of the gas mover equipment. The active life of the landfill is the age of the landfill plus the estimated number of years until closure.

(a) For sites with unknown year-to-year solid waste acceptance rate:

$$Q_M = 2L_oR\,(e^{-kc} - e^{-kt})$$

Where,

Q_M = maximum expected gas generation flow rate, cubic meters per year

L_o = methane generation potential, cubic meters per megagram solid waste

R = average annual acceptance rate, megagrams per year

k = methane generation rate constant, $year^{-1}$

t = age of the landfill at equipment installation plus the time the owner or operator intends to use the gas mover equipment or active life of the landfill, whichever is less. If the equipment is installed after closure, t is the age of the landfill at installation, years

c = time since closure, years (for an active landfill c = O and $e^{-kc} = 1$)

(b) For sites with known year-to-year solid waste acceptance rate:

$$Q_M = \sum_{i=1}^{n} 2kL_o M_i (e^{-kt_i})$$

Where,

Q_M = maximum expected gas generation flow rate, cubic meters per year

k = methane generation rate constant, $year^{-1}$

L_o = methane generation potential, cubic meters per megagram solid waste

M_i = mass of solid waste in the ith section, megagrams

t_i = age of the ith section, years

(c) If a collection and control system has been installed, actual flow data may be used to project the maximum expected gas generation flow rate instead of, or in conjunction with, the equations in paragraph (A)(1)(a) and paragraph (A)(1)(b) of this rule. If the landfill is still accepting waste, the actual measured flow data will not equal the maximum expected gas generation rate, so calculations using the equations in paragraph (A)(1)(a) or (A)(1)(b) of this rule or other methods shall be used to predict the maximum expected gas generation rate over the intended period of use of the gas control system equipment.

(2) For the purposes of determining sufficient density of gas collectors for compliance with paragraph (B)(2)(b)(i)(b) of rule 3745-76-07 of the Administrative Code, the owner or operator shall design a system of vertical wells, horizontal collectors, or other collection devices, satisfactory to the director, capable of controlling and extracting gas from all portions of the landfill sufficient to meet all operational and performance standards.

(3) For the purpose of demonstrating whether the gas collection system flow rate is sufficient to determine compliance with paragraph (B)(2)(b)(i)(c) of rule 3745-76-07 of the Administrative Code, the owner or operator shall measure gauge pressure in the gas collection header at each individual well, monthly. If a positive pressure exists, action shall be initiated to correct the exceedance within five calendar days, except for the three conditions allowed under paragraph (B) of rule 3745-76-08 of the Administrative Code. If negative pressure cannot be achieved without excess air infiltration within fifteen calendar days of the first measurement, the gas collection system shall be expanded to correct the exceedance within one hundred twenty days of the initial measurement of positive pressure. Any attempted corrective measure shall not cause exceedances

of other operational or performance standards. An alternative timeline for correcting the exceedance may be submitted to the Director for approval.

(4) Owners or operators are not required to expand the system as required in paragraph (A)(3) of this rule during the first one hundred eighty days after gas collection system start-up.

(5) For the purpose of identifying whether excess air infiltration into the landfill is occurring, the owner or operator shall monitor each well monthly for temperature and nitrogen or oxygen as provided in paragraph (C) of rule 3745-76-08 of the Administrative Code. If a well exceeds one of these operating parameters, action shall be initiated to correct the exceedance within five calendar days. If correction of the exceedance cannot be achieved within fifteen calendar days of the first measurement, the gas collection system shall be expanded to correct the exceedance within one hundred twenty days of the initial exceedance. Any attempted corrective measure shall not cause exceedances of other operational or performance standards. An alternative timeline for correcting the exceedance may be submitted to the Director for approval.

(6) An owner or operator seeking to demonstrate compliance with paragraph (B)(2)(b)(i)(d) of rule 3745-76-07 of the Administrative Code through the use of a collection system not conforming to the specifications provided in rule 3745-76-14 of the Administrative Code shall provide information satisfactory to the director as specified in paragraph (B)(2)(a)(iii) of rule 3745-76-07 of the Administrative Code demonstrating that off-site migration is being controlled.

(B) For purposes of compliance with paragraph (A) of rule 3745-76-08 of the Administrative Code, each owner or operator of a controlled landfill shall place each well or design component as specified in the approved design plan as provided in paragraph (B)(2)(a) of rule 3745-76-07 of the Administrative Code. Each well shall be installed no later than sixty days after the date on which the initial solid waste has been in place for a period of:

(1) Five years or more if active; or

(2) Two years or more if closed or at final grade.

Each well shall be installed as a measure to abate or minimize the migration of explosive gas when the director orders the owner or operator to perform such measures pursuant to paragraph (O) of rule 3745-76-12 of the Administrative Code.

(C) The following procedures shall be used for compliance with the surface methane operational standard as provided in paragraph (D) of rule 3745-76-08 of the Administrative Code.

(1) After installation of the collection system, the owner or operator shall monitor surface concentrations of methane along the entire perimeter of the collection area and along a pattern that traverses the landfill at thirty meter intervals (or a site-specific established spacing) for each collection area on a quarterly basis using an organic vapor analyzer, flame ionization detector, or other portable monitor meeting the specifications provided in paragraph (D) of this rule.

(2) The background concentration shall be determined by moving the probe inlet upwind and downwind outside the boundary of the landfill at a distance of at least thirty meters from the perimeter wells.

(3) Surface emission monitoring shall be performed in accordance with section 8.3.1 of Method 21 of Appendix A of 40 CFR Part 60, except that the probe inlet shall be placed within five to ten centimeters of the ground. Monitoring shall be performed during typical meteorological conditions.

(4) Any reading of five hundred parts per million or more above background at any location shall be recorded as a monitored exceedance and the actions specified in paragraphs (C)(4)(a) to (C)(4)(e) of this rule shall be taken. As long as the specified actions are taken, the exceedance is not a violation of the operational requirements of paragraph (D) of rule 3745-76-08 of the Administrative Code.

(a) The location of each monitored exceedance shall be marked and the location recorded.

(b) Cover maintenance or adjustments to the vacuum of the adjacent wells to increase the gas collection in the vicinity of each exceedance shall be made and the location shall be re-monitored within ten calendar days of detecting the exceedance.

(c) If the re-monitoring of the location shows a second exceedance, additional corrective action shall be taken and the location shall be monitored again within ten days of the second exceedance. If the re-monitoring shows a third exceedance for the same location, the action specified in paragraph (C)(4)(e) of this rule shall be taken, and no further monitoring of that location is required until the action specified in paragraph (C)(4)(e) of this rule has been taken.

(d) Any location that initially showed an exceedance but has a methane concentration less than five hundred parts per million methane above background at the ten-day re-monitoring specified in paragraph (C)(4)(b) or (C)(4)(c) of this rule shall be re-monitored one month from the initial exceedance. If the one-month re-monitoring shows a concentration less than five hundred parts per million above background, no further monitoring of that location is required until the next quarterly monitoring period. If the

one-month re-monitoring shows an exceedance, the actions specified in paragraph (C)(4)(c) or (C)(4)(e) of this rule shall be taken.

(e) For any location where monitored methane concentration equals or exceeds five hundred parts per million above background three times within a quarterly period, a new well or other collection device shall be installed within one hundred twenty calendar days of the initial exceedance. An alternative remedy to the exceedance, such as upgrading the blower, header pipes or control device, and a corresponding timeline for installation may be submitted to the director for approval.

(5) The owner or operator shall implement a program to monitor for cover integrity and implement cover repairs as necessary on a monthly basis, and as specified in paragraph (E)(12) of rule 3745-27-19 of the Administrative Code and paragraph (A) of rule 3745-27-14 of the Administrative Code.

(D) Each owner or operator seeking to comply with the provisions in paragraph (C) of this rule shall comply with the following instrumentation specifications and procedures for surface emission monitoring devices:

(1) The portable analyzer shall meet the instrument specifications provided in section 6 of Method 21 of Appendix A of 40 CFR Part 60, except that "methane" shall replace all references to VOC.

(2) The calibration gas shall be methane, diluted to a nominal concentration of five hundred parts per million in air.

(3) To meet the performance evaluation requirements in section 6 of Method 21 of Appendix A of 40 CFR Part 60, the instrument evaluation procedures of section 8.1 of Method 21 of Appendix A of 40 CFR Part 60 shall be used.

(4) The calibration procedures provided in section 8.1.1.1 of Method 21 of Appendix A of 40 CFR Part 60 shall be followed immediately before commencing a surface monitoring survey.

(E) The provisions of this rule apply at all times, except during periods of start-up, shutdown, or malfunction, provided that the duration of start-up, shutdown, or malfunction shall not exceed five days for collection systems and shall not exceed one hour for treatment or control devices.

Effective: 10/10/2006

R.C. 119.032 review dates: 07/12/2006 and 10/10/2011

CERTIFIED ELECTRONICALLY
Certification

09/29/2006
Date

Promulgated Under: 119.03
Statutory Authority: ORC3704.03(E)
Rule Amplifies: ORC3704.03(A), ORC3704.03(E)
Prior Effective Dates: 1/31/98, 11/16/99

3745-76-11 **Monitoring of operations.**

Except as provided in paragraph (B)(2)(a)(ii) of rule 3745-76-07 of the Administrative Code,

(A) Each owner or operator seeking to comply with paragraph (B)(2)(b)(i) of rule 3745-76-07 of the Administrative Code for an active gas collection system shall install a sampling port and a thermometer, other temperature measuring device, or an access port for temperature measurements at each wellhead and:

(1) Measure the gauge pressure in the gas collection header on a monthly basis as provided in paragraph (A)(3) of rule 3745-76-10 of the Administrative Code; and

(2) Monitor nitrogen or oxygen concentration in the landfill gas on a monthly basis as provided in paragraph (A)(5) of rule 3745-76-10 of the Administrative Code; and

(3) Monitor temperature of the landfill gas on a monthly basis as provided in paragraph (A)(5) of rule 3745-76-10 of the Administrative Code.

(B) Each owner or operator seeking to comply with paragraph (B)(2)(c) of rule 3745-76-07 of the Administrative Code using an enclosed combustor shall calibrate, maintain, and operate according to the manufacturer's specifications, the following equipment.

(1) A temperature monitoring device equipped with a continuous recorder and having a minimum accuracy of plus or minus one percent of the temperature being measured expressed in degrees Celsius or plus or minus 0.5 degrees Celsius, whichever is greater. A temperature monitoring device is not required for boilers or process heaters with design heat input capacity equal to or greater than forty four megawatts.

(2) A device that records flow to or bypass of the control device. The owner or operator shall either:

(a) Install, calibrate, and maintain a gas flow rate measuring device that shall record the flow to the control device at least every fifteen minutes; or

(b) Secure the bypass line valve in the closed position with a car-seal or a lock-and-key type configuration. A visual inspection of the seal or closure mechanism shall be performed at least once every month to ensure that the valve is maintained in the closed position and that the gas flow is not diverted through the bypass line.

(C) Each owner or operator seeking to comply with paragraph (B)(2)(c) of rule 3745-76-07 of the Administrative Code using an open flare shall install, calibrate, maintain, and operate according to the manufacturer's specifications the following equipment:

(1) A heat sensing device, such as an ultraviolet beam sensor or thermocouple, at the pilot light or the flame itself to indicate the continuous presence of a flame.

(2) A device that records flow to or bypass of the flare. The owner or operator shall either:

(a) Install, calibrate, and maintain a gas flow rate measuring device that shall record the flow to the control device at least every fifteen minutes; or

(b) Secure the bypass line valve in the closed position with a car-seal or a lock-and-key type configuration. A visual inspection of the seal or closure mechanism shall be performed at least once every month to ensure that the valve is maintained in the closed position and that the gas flow is not diverted through the bypass line.

(D) Each owner or operator seeking to demonstrate compliance with paragraph (B)(2)(c) of rule 3745-76-07 of the Administrative Code using a device other than an open flare or an enclosed combustor shall provide information satisfactory to the director as provided in paragraph (B)(2)(a)(ii) of rule 3745-76-07 of the Administrative Code describing the operation of the control device, the operating parameters that would indicate proper performance, and appropriate monitoring procedures. The director shall review the information and either approve it, or request that additional information be submitted. The director may specify additional appropriate monitoring procedures.

(E) Each owner or operator seeking to install a collection system that does not meet the specifications in rule 3745-76-14 of the Administrative Code or seeking to monitor alternative parameters to those required by rule 3745-76-08 to rule 3745-76-11 of the Administrative Code shall provide information satisfactory to the director as provided in paragraph (B)(2)(a)(ii) of rule 3745-76-07 of the Administrative Code and paragraph (B)(2)(a)(iii) of rule 3745-76-07 of the Administrative Code describing the design and operation of the collection system, the operating parameters that would indicate proper performance, and appropriate monitoring procedures. The director may specify additional appropriate monitoring procedures.

(F) Each owner or operator seeking to demonstrate compliance with paragraph (C) of rule 3745-76-10 of the Administrative Code, shall monitor surface concentrations of methane according to the instrument specifications and procedures provided in paragraph (D) of rule 3745-76-10 of the Administrative Code. Any closed landfill that has no monitored exceedances of the operational standard in three consecutive quarterly monitoring periods may skip to annual monitoring. Any methane reading

of five hundred parts per million or more above background detected during the annual monitoring returns the frequency for that landfill to quarterly monitoring.

Effective: 10/10/2006

R.C. 119.032 review dates: 07/12/2006 and 10/10/2011

CERTIFIED ELECTRONICALLY
Certification

09/29/2006
Date

Promulgated Under: 119.03
Statutory Authority: ORC3704.03(E)
Rule Amplifies: ORC3704.03(A), ORC3704.03(E)
Prior Effective Dates: 1/31/98, 11/16/99

3745-76-12 **Reporting requirements.**

[Comment: For dates of non-regulatory government publications, publications of recognized organizations and associations, federal rules, and federal statutory provisions referenced in this rule, see the last paragraph of rule 3745-76-01 of the Administrative Code titled "Incorporation by reference."]

Except as provided in paragraph (B)(2)(a)(ii) of rule 3745-76-07 of the Administrative Code,

(A) Each owner or operator subject to the requirements of this chapter shall submit or shall have submitted an initial design capacity report to the director.

(1) The initial design capacity report shall contain the date construction commenced and the date of initial waste placement, if applicable.

(2) The initial design capacity report shall contain the following information:

(a) A map or plot of the landfill, providing the size and location of the landfill, and identifying all areas where solid waste may be landfilled according to the permit issued by the director.

(b) The maximum design capacity of the landfill. Where the maximum design capacity is specified in the permit issued by the director, a copy of the permit specifying the maximum design capacity may be submitted as part of the report. If the maximum design capacity of the landfill is not specified in the permit, the maximum design capacity shall be calculated using good engineering practices. The calculations shall be provided, along with the relevant parameters as part of the report. The director may request other reasonable information as may be necessary to verify the maximum design capacity of the landfill.

(3) An amended design capacity report shall be submitted to the director providing notification of any increase in the design capacity of the landfill, within ninety days of an increase in the maximum design capacity of the landfill to or above 2.5 million megagrams and 2.5 million cubic meters. This increase in design capacity may result from an increase in permitted volume of the landfill or an increase in the density as documented in the annual recalculation required under paragraph (F) of rule 3745-76-13 of the Administrative Code. Any expansion of the landfill shall be deemed a modification, which shall cause the landfill to become subject to the new source performance standards in 40 CFR Part 60, Subpart WWW.

(B) Each owner or operator subject to the requirements of this chapter shall submit an NMOC emission rate report to the director initially and annually thereafter, except as

provided for in paragraph (B)(1)(b) or (B)(3) of this rule. The director may request such additional information as may be necessary to verify the reported NMOC emission rate.

(1) The NMOC emission rate report shall contain an annual or five-year estimate of the NMOC emission rate calculated using the formula and procedures provided in paragraph (A) or (B) of rule 3745-76-09 of the Administrative Code, as applicable.

(a) The initial NMOC emission rate report may be combined with the initial design capacity report required in paragraph (A) of this rule. Subsequent NMOC emission rate reports shall be submitted annually thereafter, except as provided for in paragraphs (B)(1)(b) and (B)(3) of this rule.

(b) If the estimated NMOC emission rate as reported in the annual report to the director is less than fifty megagrams per year in each of the next five consecutive years, the owner or operator may elect to submit an estimate of the NMOC emission rate for the next five-year period in lieu of the annual report. This estimate shall include the current amount of solid waste-in-place and the estimated waste acceptance rate for each year of the five years for which an NMOC emission rate is estimated. All data and calculations upon which this estimate is based shall be provided to the director. This estimate shall be revised at least once every five years. If the actual waste acceptance rate exceeds the estimated waste acceptance rate in any year reported in the five-year estimate, a revised five-year estimate shall be submitted to the director. The revised estimate shall cover the five-year period beginning with the year in which the actual waste acceptance rate exceeded the estimated waste acceptance rate.

(2) The NMOC emission rate report shall include all the data, calculations, sample reports and measurements used to estimate the annual or five-year emissions.

(3) Each owner or operator subject to the requirements of this chapter is exempted from the requirements of paragraphs (B)(1) and (B)(2) of this rule, after the installation of a collection and control system in compliance with paragraph (B)(2) of rule 3745-76-07 of the Administrative Code, during such time as the collection and control system is in operation and in compliance with rule 3745-76-08 and rule 3745-76-10 of the Administrative Code.

(C) Each owner or operator subject to the provisions of paragraph B)(2)(a) of rule 3745-76-07 of the Administrative Code shall submit a collection and control system design plan to the director within one year of the first report, required under paragraph (B) of this rule, in which the emission rate exceeds fifty megagrams per year, except as follows:

(1) If the owner or operator elects to recalculate the NMOC emission rate after Tier 2 NMOC sampling and analysis as provided in paragraph (A)(3) of rule 3745-76-09 of the Administrative Code and the resulting rate is less than fifty megagrams per year, annual periodic reporting shall be resumed, using the Tier 2 determined site-specific NMOC concentration, until the calculated emission rate is equal to or greater than fifty megagrams per year or the landfill is closed. The revised NMOC emission rate report, with the recalculated emission rate based on NMOC sampling and analysis, shall be submitted within one hundred eighty days of the first calculated exceedance of fifty megagrams per year.

(2) If the owner or operator elects to recalculate the NMOC emission rate after determining a site-specific methane generation rate constant (k), as provided in Tier 3 in paragraph (A)(4) of rule 3745-76-09 of the Administrative Code, and the resulting NMOC emission rate is less than fifty megagrams per year, annual periodic reporting shall be resumed. The resulting site-specific methane generation rate constant (k) shall be used in the emission rate calculation until such time as the emissions rate calculation results in an exceedance. The revised NMOC emission rate report based on the provisions of paragraph (A)(4) of rule 3745-76-09 of the Administrative Code and the resulting site-specific methane generation rate constant (k) shall be submitted to the director within one year of the first calculated emission rate exceeding fifty megagrams per year.

(D) Each owner or operator of a controlled landfill shall submit a closure report to the director within thirty days of waste acceptance cessation. The director may request additional information as may be necessary to verify that permanent closure has taken place in accordance with 40 CFR 258.60. If a closure report has been submitted to the director, no additional wastes may be placed into the landfill without filing a notification of modification. The landfill owner or operator shall also meet the notification requirements for landfill closure contained in paragraph (E) of rule 3745-27-11 of the Administrative Code.

(E) Each owner or operator of a controlled landfill shall submit an equipment removal report to the director thirty days prior to removal or cessation of operation of the control equipment.

(1) The equipment removal report shall contain all of the following items:

(a) A copy of the closure report submitted in accordance with paragraph (D) of this rule;

(b) A copy of the initial performance test report demonstrating that the fifteen year minimum control period has expired; and

(c) Dated copies of three successive NMOC emission rate reports demonstrating that the landfill is no longer producing fifty megagrams or greater of NMOC per year.

(2) The director may request such additional information as may be necessary to verify that all of the conditions for removal in paragraph (B)(2)(e) of rule 3745-76-07 of the Administrative Code have been met.

(F) Each owner or operator of a landfill seeking to comply with paragraph (B)(2) of rule 3745-76-07 of the Administrative Code using an active collection system designed in accordance with paragraph (B)(2)(b) of rule 3745-76-07 of the Administrative Code shall submit to the director annual reports of the recorded information in paragraphs (F)(1) to (F)(6) of this rule. The initial annual report shall be submitted within one hundred eighty days of installation and start-up of the collection and control system, and shall include the initial performance test report for enclosed combustion devices and flares. Reportable exceedances are defined under paragraph (C) of rule 3745-76-13 of the Administrative Code.

(1) Value and length of time for exceedance of applicable parameters monitored under paragraphs (A), (B), (C), and (D) of rule 3745-76-11 of the Administrative Code.

(2) Description and duration of all periods when the gas stream is diverted from the control device through a bypass line or the indication of bypass flow as specified under rule 3745-76-11 of the Administrative Code.

(3) Description and duration of all periods when the control device was not operating for a period exceeding one hour and length of time the control device was not operating.

(4) All periods when the collection system was not operating in excess of five days.

(5) The location of each exceedance of the five hundred parts per million methane concentration as provided in paragraph (D) of rule 3745-76-08 of the Administrative Code and the concentration recorded at each location for which an exceedance was recorded in the previous month.

(6) The date of installation and the location of each well or collection system expansion added pursuant to paragraphs (A)(3), (B), and (C)(4) of rule 3745-76-10 of the Administrative Code.

(G) Each owner or operator seeking to comply with paragraph (B)(2)(c) of rule 3745-76-07 of the Administrative Code shall include the following information with the initial performance test report as specified in paragraph (B)(2)(c)(ii) of rule 3745-76-07 of the Administrative Code:

(1) A diagram of the collection system showing collection system positioning including all wells, horizontal collectors, surface collectors, or other gas

extraction devices, including the locations of any areas excluded from collection and the proposed sites for the future collection system expansion;

(2) The data upon which the sufficient density of wells, horizontal collectors, surface collectors, or other gas extraction devices and the gas mover equipment sizing are based;

(3) The documentation of the presence of asbestos or nondegradable material for each area from which collection wells have been excluded based on the presence of asbestos or nondegradable material;

(4) The sum of the gas generation flow rates for all areas from which collection wells have been excluded based on nonproductivity and the calculations of gas generation flow rate for each excluded area;

(5) The provisions for increasing gas mover equipment capacity with increased gas generation flow rate, if the present gas mover equipment is inadequate to move the maximum flow rate expected over the life of the landfill; and

(6) The provisions for the control of off-site migration.

Effective: 10/10/2006

R.C. 119.032 review dates: 07/12/2006 and 10/10/2011

CERTIFIED ELECTRONICALLY
Certification

09/29/2006
Date

Promulgated Under: 119.03
Statutory Authority: ORC3704.03(E)
Rule Amplifies: ORC3704.03(A), ORC3704.03(E)
Prior Effective Dates: 1/31/98, 11/16/99

3745-76-13 **Recordkeeping requirements.**

(A) Except as provided in paragraph (B)(2)(a)(ii) of rule 3745-76-07 of the Administrative Code, each owner or operator of an MSW landfill subject to the provisions of paragraph (B) of rule 3745-76-07 of the Administrative Code shall keep for at least five years up-to-date, readily accessible, on-site records of the design capacity report which triggered paragraph (B) of rule 3745-76-07 of the Administrative Code, the current amount of solid waste in-place, and the year-by-year waste acceptance rate. Off-site records may be maintained if they are retrievable within four hours. Either paper copy or electronic formats are acceptable.

(B) Except as provided in paragraph (B)(2)(a)(ii) of rule 3745-76-07 of the Administrative Code, each owner or operator of a controlled landfill shall keep up-to-date, readily accessible records for the life of the control equipment of the data listed in paragraphs (B)(1) to (B)(4) of this rule as measured during the initial performance test or compliance determination. Records of subsequent tests or monitoring shall be maintained for a minimum of five years. Records of the control device vendor specifications shall be maintained until removal.

(1) Where an owner or operator subject to the provisions of this chapter seeks to demonstrate compliance with paragraph (B)(2)(b) of rule 3745-76-07 of the Administrative Code:

(a) The maximum expected gas generation flow rate as calculated in paragraph (A)(1) of rule 3745-76-10 of the Administrative Code. The owner or operator may use another method to determine the maximum gas generation flow rate, if the method has been approved by the director.

(b) The density of wells, horizontal collectors, surface collectors, or other gas extraction devices determined using the procedures specified in paragraph (A)(1) of rule 3745-76-14 of the Administrative Code.

(2) Where an owner or operator subject to the provisions of this chapter seeks to demonstrate compliance with paragraph (B)(2)(c) of rule 3745-76-07 of the Administrative Code through use of an enclosed combustion device other than a boiler or process heater with a design heat input capacity greater than forty four megawatts:

(a) The average combustion temperature measured at least every fifteen minutes and averaged over the same time period of the performance test.

(b) The percent reduction of NMOC determined as specified in paragraph (B)(2)(c)(ii) of rule 3745-76-07 of the Administrative Code achieved by the control device.

(3) Where an owner or operator subject to the provisions of this chapter seeks to demonstrate compliance with paragraph (B)(2)(c)(ii)(a) of rule 3745-76-07 of the Administrative Code through use of a boiler or process heater of any size: a description of the location at which the collected gas vent stream is introduced into the boiler or process heater over the same time period of the performance testing.

(4) Where an owner or operator subject to the provisions of this chapter seeks to demonstrate compliance with paragraph (B)(2)(c)(i) of rule 3745-76-07 of the Administrative Code through use of an open flare, the flare type (i.e., steam-assisted, air-assisted, or nonassisted), all visible emission readings, heat content determination, flow rate or bypass flow rate measurements, and exit velocity determinations made during the performance test as specified in rule 3745-76-15 of the Administrative Code; continuous records of the flare pilot flame or flare flame monitoring and records of all periods of operations during which the pilot flame of the flare flame is absent.

(C) Except as provided in paragraph (B)(2)(a)(ii) of rule 3745-76-07 of the Administrative Code, each owner or operator of a controlled landfill subject to the provisions of this chapter shall keep for five years up-to-date, readily accessible continuous records of the equipment operating parameters specified to be monitored in rule 3745-76-11 of the Administrative Code as well as up-to-date, readily accessible records for periods of operation during which the parameter boundaries established during the most recent performance test are exceeded.

(1) The following constitute exceedances that shall be recorded and reported under paragraph (F) of rule 3745-76-12 of the Administrative Code:

(a) For enclosed combustors except for boilers and process heaters with design heat input capacity of forty four megawatts (one hundred fifty million British Thermal Units per hour) or greater, all three-hour periods of operation during which the average combustion temperature was more than twenty eight degrees centigrade below the average combustion temperature during the most recent performance test at which compliance with paragraph (B)(2)(c) of rule 3745-76-07 of the Administrative Code was determined.

(b) For boilers or process heaters, whenever there is a change in the location at which the vent stream is introduced into the flame zone as required under paragraph (B)(3) of this rule.

(2) Each owner or operator subject to the provisions of this chapter shall keep up-to-date, readily accessible continuous records of the indication of flow to the control device or the indication of bypass flow or records of monthly inspections of car-seals or lock-and-key configurations used to seal bypass lines, specified under rule 3745-76-11 of the Administrative Code.

(3) Each owner or operator subject to the provisions of this chapter who uses a boiler or process heater with a design heat input capacity of forty four megawatts or greater to comply with paragraph (B)(2)(c) of rule 3745-76-07 of the Administrative Code shall keep an up-to-date, readily accessible record of all periods of operation of the boiler or process heater. (Examples of such records could include records of steam use, fuel use, or monitoring data collected pursuant to a permit or other state, local, or federal regulatory requirements.)

(4) Each owner or operator seeking to comply with the provisions of this chapter by use of an open flare shall keep up-to-date, readily accessible continuous records of the flame or flare pilot flame monitoring specified under paragraph (C) of rule 3745-76-11 of the Administrative Code, and up-to-date, readily accessible records of all periods of operation in which the flame or flare pilot flame is absent.

(D) Except as provided in paragraph (B)(2)(a)(ii) of rule 3745-76-07 of the Administrative Code, each owner or operator subject to the provisions of this chapter shall keep for the life of the collection system an up-to-date, readily accessible plot map showing each existing and planned collector in the system and providing a unique identification location label for each collector.

(1) Each owner or operator subject to the provisions of this chapter shall keep up-to-date, readily accessible records of the installation date and location of all newly installed collectors as specified under paragraph (B) of rule 3745-76-10 of the Administrative Code.

(2) Each owner or operator subject to the provisions of this chapter shall keep readily accessible documentation of the nature, date of deposition, amount, and location of asbestos-containing or nondegradable waste excluded from collection as provided in paragraph (A)(3)(a) of rule 3745-76-14 of the Administrative Code as well as any nonproductive areas excluded from collection as provided in paragraph (A)(3)(b) of rule 3745-76-14 of the Administrative Code.

(E) Except as provided in paragraph (B)(2)(a)(ii) of rule 3745-76-07 of the Administrative Code, each owner or operator subject to the provisions of this chapter shall keep for at least five years up-to-date, readily accessible records of all collection and control system exceedances of the operational standards in rule 3745-76-08 of the Administrative Code, the reading in the subsequent month whether or not the second reading is an exceedance, and the location of each exceedance.

(F) Landfill owners or operators who convert design capacity from volume to mass or mass to volume to demonstrate that landfill design capacity is less than 2.5 million megagrams or 2.5 million cubic meters, as provided in the definition of "design capacity", shall keep readily accessible, on site records of the annual recalculation of site-specific density, design capacity, and the supporting documentation. Off site

records may be maintained if they are retrievable within four hours. Either paper copy or electronic formats are acceptable.

Effective: 10/10/2006

R.C. 119.032 review dates: 07/12/2006 and 10/10/2011

CERTIFIED ELECTRONICALLY
Certification

09/29/2006
Date

Promulgated Under: 119.03
Statutory Authority: ORC3704.03(E)
Rule Amplifies: ORC3704.03(A), ORC3704.03(E)
Prior Effective Dates: 1/31/98, 11/16/99

3745-76-14 **Specifications for active collection systems.**

(A) Each owner or operator seeking to comply with paragraph (B)(2)(a) of rule 3745-76-07 of the Administrative Code shall site active collection wells, horizontal collectors, surface collectors, or other extraction devices at a sufficient density throughout all gas producing areas using the following procedures unless alternative procedures have been approved by the director as provided in paragraph (B)(2)(a)(iii) of rule 3745-76-07 of the Administrative Code and paragraph (B)(2)(a)(iv)) of rule 3745-76-07 of the Administrative Code:

(1) The collection devices within the interior and along the perimeter areas shall be certified to achieve comprehensive control of surface gas emissions by a professional engineer. The following issues shall be addressed in the design: depths of refuse, refuse gas generation rates and flow characteristics, cover properties, gas system expandibility, leachate and condensate management, accessibility, compatibility with filling operations, integration with closure end use, air intrusion control, corrosion resistance, fill settlement, resistance to the refuse decomposition heat, and maintenance of the integrity of the final cover around each well.

(2) The sufficient density of gas collection devices determined in paragraph (A)(1) of this rule shall address landfill gas migration issues and augmentation of the collection system through the use of active or passive systems at the landfill perimeter or exterior.

(3) The placement of gas collection devices determined in paragraph (A)(1) of this rule shall control all gas producing areas, except as provided by paragraphs (A)(3)(a) and (A)(3)(b) of this rule.

(a) Any segregated area of asbestos or nondegradable material may be excluded from collection if documented as provided under paragraph (D) of rule 3745-76-13 of the Administrative Code. The documentation shall provide the nature, date of deposition, location and amount of asbestos or nondegradable material deposited in the area, and shall be provided to the director upon request.

(b) Any nonproductive area of the landfill may be excluded from control, provided that the total of all excluded areas can be shown to contribute less than one percent of the total amount of NMOC emissions from the landfill. The amount, location, and age of the material shall be documented and provided to the director upon request. A separate NMOC emissions estimate shall be made for each section proposed for exclusion, and the sum of all such sections shall be compared to the NMOC emissions estimate for the entire landfill. Emissions from each section shall be computed using the following equation:

$$Q_i = 2kL_oM_i(e^{-kt_i})(C_{NMOC})(3.6X10^{-9})$$

Where,

Q_i = NMOC emission rate from the ith section, megagrams per year

k = methane generation rate constant, $year^{-1}$

L_o = methane generation potential, cubic meters per megagram solid waste

M_i = mass of the degradable solid waste in the ith section, megagram

t_i = age of the solid waste in the ith section, years

C_{NMOC} = concentration of nonmethane organic compounds, parts per million by volume

3.6×10^{-9} = conversion factor

(c) The values for k, and C_{NMOC} determined in field testing shall be used, if field testing has been performed in determining the NMOC emission rate or the radii of influence (the distance from the well center to a point in the landfill where the pressure gradient applied by the blower or compressor approaches zero). If field testing has not been performed, the default values for k, L_o, and C_{NMOC} provided in paragraph (A)(1) of rule 3745-76-09 of the Administrative Code or the alternative values from paragraph (A)(5) of rule 3745-76-09 of the Administrative Code shall be used. The mass of nondegradable solid waste contained within the given section may be subtracted from the total mass of the section when estimating emissions provided the nature, location, age, and amount of the nondegradable material is documented as provided in paragraph (A)(3)(a) of this rule.

(B) Each owner or operator seeking to comply with paragraph (B)(2)(a)(i) of rule 3745-76-07 of the Administrative Code shall construct the gas collection devices using the following equipment or procedures:

(1) The landfill gas extraction components shall be constructed of polyvinyl chloride (PVC), high density polyethylene (HDPE) pipe, fiberglass, stainless steel, or other nonporous corrosion resistant material of suitable dimensions to: convey projected amounts of gases; withstand installation, static, and settlement forces; and withstand planned overburden or traffic loads. The collection system shall extend as necessary to comply with emission and migration standards. Collection devices such as wells and horizontal collectors shall be perforated to allow gas entry without head loss sufficient to impair performance across the

intended extent of control. Perforations shall be situated with regard to the need to prevent excessive air infiltration.

(2) Vertical wells shall be placed so as not to endanger underlying liners and shall address the occurrence of water within the landfill. Holes and trenches constructed for piped wells and horizontal collectors shall be of sufficient cross-section so as to allow for their proper construction and completion including, for example, centering of pipes and placement of gravel backfill. Collection devices shall be designed so as not to allow indirect short circuiting of air into the cover or refuse into the collection system or gas into the air. Any gravel used around pipe perforations should be of a dimension so as not to penetrate or block perforations.

(3) Collection devices may be connected to the collection header pipes below or above the landfill surface. The connector assembly shall include a positive closing throttle valve, any necessary seals and couplings, access couplings and at least one sampling port. The collection devices shall be constructed of PVC, HDPE, fiberglass, stainless steel, or other nonporous material of suitable thickness.

(C) Each owner or operator seeking to comply with paragraph (B)(2)(a)(i) of rule 3745-76-07 of the Administrative Code shall convey the landfill gas to a control system in compliance with paragraph (B)(2)(c) of rule 3745-76-07 of the Administrative Code through the collection header pipe(s). The gas mover equipment shall be sized to handle the maximum gas generation flow rate expected over the intended use period of the gas moving equipment using the following procedures:

(1) For existing collection systems, the flow data shall be used to project the maximum flow rate. If no flow data exists, the procedures in paragraph (C)(2) of this rule shall be used.

(2) For new collection systems, the maximum flow rate shall be in accordance with paragraph (A)(1) of rule 3745-76-10 of the Administrative Code.

Effective: 10/10/2006

R.C. 119.032 review dates: 07/12/2006 and 10/10/2011

CERTIFIED ELECTRONICALLY
Certification

09/29/2006
Date

Promulgated Under: 119.03
Statutory Authority: ORC3704.03(E)
Rule Amplifies: ORC3704.03(A), ORC3704.03(E)
Prior Effective Dates: 1/31/98, 11/16/99

3745-76-15 **Flare requirements.**

[Comment: For dates of non-regulatory government publications, publications of recognized organizations and associations, federal rules, and federal statutory provisions referenced in this rule, see the last paragraph of rule 3745-76-01 of the Administrative Code titled "Incorporation by reference."]

(A) General requirements

(1) Flares shall be designed for and operated with no visible emissions as determined by the methods specified in paragraph (D)(1) of this rule, except for periods not to exceed a total of five minutes during any two consecutive hours.

(2) Flares shall be operated with a flame present at all times, as determined by the methods specified in paragraph (D)(2) of this rule.

(3) Flares used to comply with provisions of this chapter shall be operated at all times when emissions may be vented to them.

(4) Flares used to comply with this rule shall be steam-assisted, air-assisted, or nonassisted.

(B) The owner or operator shall either comply with the requirements for the heat content specifications and the maximum tip velocity in paragraphs (B)(1) of this rule or the requirements for nonassisted flares having a hydrogen content of 8.0 per cent or greater in paragraph (B)(2) of this rule:

(1) Heat content and maximum tip velocity specifications

(a) Flares shall be used only with the net heating value of the gas being combusted being 11.2 megajoules per standard cubic meter (three hundred Btu per standard cubic foot) or greater if the flare is steam-assisted or air-assisted; or with the net heating value of the gas being combusted being 7.45 megajoules per standard cubic meter (two hundred Btu per standard cubic foot) or greater if the flare is nonassisted. The net heating value of the gas being combusted shall be determined by the methods specified in paragraph (D)(3) of this rule.

(b) Steam-assisted and nonassisted flares shall be designed for and operated with an exit velocity less than 18.3 meters per second (sixty feet per second), as determined by the methods specified in paragraph (D)(4) of this rule, except as provided in paragraphs (B)(1)(c) and (B)(1)(d) of this rule.

(c) If the net heating value of the gas being combusted is greater than 37.3 megajoules per standard cubic foot (one thousand Btu per standard cubic foot), steam-assisted and nonassisted flares can be designed for and operated with an exit velocity equal to or greater than 18.3 meters per

second (sixty feet per second) but less than one hundred and twenty-two meters per second (four hundred feet per second), as determined by the methods specified in paragraph (D)(4) of this rule.

(d) Steam-assisted and nonassisted flares may be designed for and operated with an exit velocity less than that calculated for the velocity (V_{max}) below and less than one hundred and twenty two meters per second (four hundred feet per second). This maximum permitted velocity shall be calculated as follows:

$$\text{Log}_{10} (V_{max}) = (H_T + 28.8)/31.7$$

where:

V_{max} = maximum permitted velocity, meters per second;

28.8 = constant;

31.7 = constant; and

H_T = the net heating value as determined in paragraph (D)(3) of this rule.

The actual exit velocity of the flare shall be determined by the methods specified in paragraph (D)(4) of this rule.

(e) Air-assisted flares shall be designed and operated with an exit velocity less than the velocity, V_{max} , calculated as follows:

$$V_{max} = 8.706 + 0.7084 (H_T)$$

where:

V_{max} = maximum permitted velocity, meters per second;

8.706 = constant;

0.7084 = constant; and

H_T = the net heating value as determined in paragraph (D)(3) of this rule.

The actual exit velocity of the flare shall be determined by the methods specified in paragraph (D)(4) of this rule.

(2) Nonassisted flares with a hydrogen content of at least eight per cent (by volume)

(a) Nonassisted flares shall be used that have a diameter of three inches or greater, and a hydrogen content of 8.0 per cent (by volume), or greater, and shall be designed for and operated with an exit velocity of less than 37.2

meters per second (one hundred and twenty two feet per second) and less than the velocity, V_{max}, as determined by the following equation:

$V_{max} = (X_{H2}-K_1)\ K_2$

Where:

V_{max} = maximum permitted velocity, meters per second;

K_1 = constant, 6.0 volume-per cent hydrogen;

K_2 = constant, 3.9 meters per second per volume-per cent hydrogen; and

X_{H2} = the volume-per cent of hydrogen, on a wet basis, as calculated by using the ASTM D1946-90.

The actual exit velocity of the flare shall be determined by the methods specified in paragraph (D)(4) of this rule.

(C) Owners or operators of flares used to comply with the provisions of this chapter shall monitor these control devices to ensure that they are operated and maintained in conformance with their design. Monitoring and record keeping shall be maintained as required in paragraph (C)(4) of rule 3745-76-13 and paragraph (C) of rule 3745-76-11 of the Administrative Code.

(D) Compliance determination

(1) Reference Method 22 shall be used to determine the compliance of flares with the visible emission provisions of this rule. An observation period of two hours shall be used in accordance with the requirements of Method 22.

(2) The presence of a flare pilot flame shall be monitored using a thermocouple or other equivalent device to detect the presence of a flame.

(3) The net heating value of the gas being combusted in a flare shall be calculated using the following equation:

$$H_T = k\sum_{i=1}^{n} C_i H_i$$

Where:

k = constant, 1.740×10^{-7} (megajoule-gram mole per parts per million-standard cubic meter-kilocalorie), where the standard temperature for (gram mole per standard cubic meter) is twenty degrees Celsius;

H_T = net heating value of the sample, megajoules per standard cubic meter; where the net enthalpy per mole of offgas is based on combustion at twenty five degrees Celsius and seven hundred sixty millimeters of mercury, but the standard temperature for determining the volume corresponding to one mole is twenty degrees Celsius;

C_i = concentration of sample component i in ppm on a wet basis, as measured for organics by Method 18 of Appendix A of 40 CFR Part 60and measured for hydrogen and carbon monoxide by ASTM D1946- 90;

H_i = net heat of combustion of sample component i, kilocalorie per gram mole at twenty five degrees Celsius and seven hundred sixty millimeters of mercury. The heats of combustion may be determined using ASTM D4809-95 if published values are not available or cannot be calculated.

(4) The actual exit velocity of a flare shall be determined by dividing the volumetric flowrate (in units of standard temperature and pressure), as determined by Reference Methods 2, 2A, 2C, or 2D as appropriate; by the unobstructed (free) cross sectional area of the flare tip.

Effective: 10/10/2006

R.C. 119.032 review dates: 07/12/2006 and 10/10/2011

CERTIFIED ELECTRONICALLY
Certification

09/29/2006
Date

Promulgated Under: 119.03
Statutory Authority: ORC3704.03(E)
Rule Amplifies: ORC3704.03(A), ORC3704.03(E)
Prior Effective Dates: 1/31/98

Chapter 3745-77: Title V Permit Rules

Contact: Mike Ahern 614-644-3631
Mike.Ahern@epa.ohio.gov

3745-77-01 **Definitions.**

[Comment: For dates of non-regulatory government publications, publications of recognized organizations and associations, federal rules, and federal statutory provisions referenced in this rule, see the "Referenced materials" section at the end of this rule.]

The following definitions shall apply to this chapter:

(A) "Act" means the federal Clean Air Act, as defined in section 3704.01 of the Revised Code.

(B) "Administrator" means the administrator of the United States environmental protection agency or the chief executive officer of any successor federal agency responsible for implementation of the Act.

(C) "Administrative permit amendment" means a permit revision that:

(1) Corrects typographical errors;

(2) Identifies a change in the name, address, or phone number of any person identified in the permit, or provides a similar minor administrative change at the source;

(3) Requires more frequent monitoring or reporting by the permittee;

(4) Allows for a change in ownership or operational control of a source where the director determines that no other change in the permit is necessary, provided that a written agreement containing a specific date for transfer of permit responsibility, coverage, and liability between the current and new permittee has been submitted to the director;

(5) Incorporates into the Title V permit the federally enforceable requirements in a permit-to-install issued pursuant to Chapter 3745-31 of the Administrative Code provided that such permit-to-install was issued consistent with procedural requirements applicable to the change if it were subject to review as a Title V permit modification, and compliance requirements substantially equivalent to those contained in rule 3745-77-07 of the Administrative Code; or

(6) Incorporates any other type of change that the administrator has determined to be similar to those revisions set forth in paragraphs (C)(1) to (C)(4) of this rule.

(D) "Affected source" shall have the meaning given to it in the regulations promulgated under Title IV of the act.

(E) "Affected states" are all states:

(1) Contiguous to Ohio, whose air quality may be affected by emissions from the facility seeking the Title V permit issuance, modification, or permit renewal being proposed; or

(2) That are within fifty miles of the permitted source.

(F) "Affected unit" shall have the meaning given to it in the regulations promulgated under Title IV of the act:

(G) "Agency" means the Ohio environmental protection agency or its director as the context or other law or rules may require.

(H) "Applicable requirement" means all of the following federal requirements as they apply to emissions units in a Title V source subject to this chapter, including requirements that have been promulgated or approved by the administrator through rulemaking at the time of issuance but have future-effective compliance dates:

(1) Any standard or other requirement provided for in the applicable implementation plan approved or promulgated by the administrator through rulemaking under Title I of the act that implements the relevant requirements of the act, including any revisions to that plan promulgated in 40 CFR Part 52;

(2) Any federally enforceable term or condition of any preconstruction permit issued pursuant to regulations approved or promulgated through rulemaking under Title I, including Parts C or D, of the act;

(3) Any standard or other requirement under Section 111 of the act, including Section 111(d);

(4) Any standard or other requirement under Section 112 of the act, including any requirement concerning accident prevention under Section 112(r)(7) of the act, provided however that the contents of a risk management plan required under Section 112(r) of the act need not be included in the Title V permit application or permit.

(5) Any standard or other requirement of the acid rain program under Title IV of the act or the regulations promulgated thereunder;

(6) Any requirements established pursuant to Section 114(a)(3) or Section 504(b) of the act;

(7) Any standard or other requirement governing solid waste incineration under Section 129 of the act;

(8) Any standard or other requirement for consumer and commercial products under Section 183(e) of the act;

(9) Any standard or other requirement for tank vessels under Section 183(f) of the act;

(10) Any standard or other requirement of the program to control air pollution from outer continental shelf sources under Section 328 of the act;

(11) Any standard or other requirement of the regulations promulgated by the administrator to protect stratospheric ozone under Title VI of the act, unless the administrator has determined that such requirements need not be contained in a Title V permit; and

(12) Any national ambient air quality standard or increment or visibility requirement under Part C of Title I of the act, but only as it would apply to temporary sources permitted pursuant to Section 504(e) of the act.

(I) "Applicable implementation plan" means the portion (or portions) of the state implementation plan, or most recent revision thereof, that has been approved under Section 110 of the act, or promulgated under Section 110(c) of the act.

(J) "Approval of the Title V permit program" means the date that the Ohio Title V permit program has been given approval by the administrator pursuant to Section 502 of the act.

(K) "Designated representative" shall have the meaning given to it in paragraph (26) of Section 402 of the act and the regulations promulgated thereunder.

(L) "Director" means the director of environmental protection.

(M) "Draft permit" means the version of a permit for which the director offers public participation under rule 3745-77-08 of the Administrative Code or affected state review under rule 3745-77-09 of the Administrative Code.

(N) "Emissions allowable under the Title V permit" means a federally enforceable permit term or condition determined at issuance to be required by an applicable requirement that establishes an emissions limit (including a work practice standard) or a federally enforceable emissions cap that the source has assumed to avoid an applicable requirement to which the source would otherwise be subject.

(O) "Emissions unit" means any part or activity of a stationary source that emits or has the potential to emit any regulated air pollutant or any pollutant listed under Section 112(b) of the act. The term is not meant to alter or affect the definition of the term "unit" for purposes of Title IV of the act.

(P) "Equivalent alternative emission limit" means an emission limit, including operating restrictions, that meets the criteria of division (E) of section 3704.03 and division (K) of section 3704.036 of the Revised Code.

(Q) "Facility" means all of the emitting activities that are located on contiguous or adjacent properties that are under the control of the same person or persons or under common control and that are in the same major group as described in the "Standard Industrial Classification Manual".

(R) "FEPTIO" means federally enforceable permit-to-install and operate.

(S) "Final permit" means the version of a Title V permit issued by the director for which all review procedures required by rule 3745-77-08 of the Administrative Code have been completed, or a Title V permit issued by the administrator pursuant to 40 CFR 70.8(C)(4).

(T) "Fugitive emissions" are those emissions that could not reasonably pass through a stack, chimney, vent, or other functionally equivalent opening.

(U) "General permit" means a Title V permit that meets the requirements of paragraph (D) of rule 3745-77-07 of the Administrative Code.

(V) "Insignificant activities and emissions levels" means any of the following:

(1) All source categories excluded from the requirements to obtain installation permits or operating permits under section 3704.011 of the Revised Code or Chapter 3745-15, 3745-31, or 3745-35 of the Administrative Code;

(2) All source categories specifically exempted under 40 CFR Part 70; or

(3) Any emission unit with uncontrolled potential emissions of five tons or less per year of any regulated air pollutant other than a hazardous air pollutant and not more than twenty per cent of an applicable major source threshold under the Act.

(4) Any research and development source that is by itself not a major source.

(W) "Hazardous air pollutant" means any pollutant listed under Section 112(b) of the act.

(X) "Major source" means any stationary source or any group of stationary sources that are located on one or more contiguous or adjacent properties and under common control of the same person (or persons under common control) belonging to a single major industry grouping and that are described in paragraph (X)(1), (X)(2), or (X)(3) of this rule. For the purposes of defining major source, a stationary source or group of stationary sources shall be considered part of a single industrial grouping if all of the pollutant emitting activities at such source or group of sources on

contiguous or adjacent properties belong to the same major group (i.e., all have the same two-digit code) as described in the "Standard Industrial Classification Manual".

(1) A major source under Section 112 of the act, which is defined as:

(a) For pollutants other than radionuclides, any stationary source or group of stationary sources located within a contiguous area and under common control that emits or has the potential to emit, in the aggregate, ten TPY or more of any hazardous air pollutant, twenty-five TPY or more of any combination of hazardous air pollutants, or such lesser quantity as the administrator may establish by rule. Notwithstanding the preceding sentence, emissions from any oil or gas exploration or production well (with its associated equipment) and emissions from any pipeline compressor or pump station shall not be aggregated with emissions from other similar units, whether or not such units are in a contiguous area or under common control to determine whether such units or stations are major sources; or

(b) For radionuclides, major source shall have the meaning specified by the administrator by rule.

(2) A major stationary source of air pollutants, as defined in Section 302 of the act, that directly emits or has the potential to emit, one hundred TPY or more of any air pollutant (including any major source of fugitive emissions of any such pollutant as determined by rule by the administrator). The fugitive emissions of a stationary source shall not be considered in determining whether it is a major stationary source for the purposes of Section 302(j) of the act, unless the source belongs to one of the following categories of stationary sources:

(a) Coal cleaning plants (with thermal dryers);

(b) Kraft pulp mills;

(c) Portland cement plants;

(d) Primary zinc smelters;

(e) Iron and steel mills;

(f) Primary aluminum ore reduction plants;

(g) Primary copper smelters;

(h) Municipal incinerators capable of charging more than two hundred fifty tons of refuse per day;

(i) Hydrofluoric, sulfuric, or nitric acid plants;

(j) Petroleum refineries;

(k) Lime plants;

(l) Phosphate rock processing plants;

(m) Coke oven batteries;

(n) Sulfur recovery plants;

(o) Carbon black plants (furnace process);

(p) Primary lead smelters;

(q) Fuel conversion plants;

(r) Sintering plants;

(s) Secondary metal production plants;

(t) Chemical process plants except for ethanol production facilities that produce ethanol by natural fermentation included in NAICS codes 325193 or 312140;

(u) Fossil-fuel boilers (or combination thereof) totaling more than two hundred fifty million british thermal units per hour heat input;

(v) Petroleum storage and transfer units with a total storage capacity exceeding three hundred thousand barrels;

(w) Taconite ore processing plants;

(x) Glass fiber processing plants;

(y) Charcoal production plants;

(z) Fossil-fuel-fired steam electric plants of more than two hundred fifty million british thermal units per hour heat input; or

(aa) Any other stationary source categories that, as of August 7, 1980, are regulated by a standard promulgated under section 111 or 112 of the act.

(3) A major stationary source as defined in Part D of Title I of the act, including:

(a) For ozone nonattainment areas, sources with the potential to emit one hundred TPY or more of volatile organic compounds or oxides of nitrogen in areas classified as marginal or moderate, fifty TPY or more in areas classified as serious, twenty-five TPY or more in areas classified as severe, and ten TPY or more in areas classified as extreme; except that the references in this paragraph to one hundred, fifty, twenty-five, and ten TPY of nitrogen oxides shall not apply with respect to any source for which the administrator has made a finding, under Section 182(f)(1) or (2) of the act, that requirements under Section 182(f) of the act do not apply;

(b) For ozone transport regions established pursuant to Section 184 of the act, sources with the potential to emit fifty TPY or more of volatile organic compounds;

(c) For carbon monoxide nonattainment areas:

(i) That are classified as serious, and

(ii) In which stationary sources contribute significantly to carbon monoxide levels as determined under rules issued by the administrator, sources with the potential to emit fifty TPY or more of carbon monoxide; and

(d) For PM10 nonattainment areas classified as serious, sources with the potential to emit seventy TPY or more of PM10.

(Y) "Non-major source" or "minor source" means any stationary source that does not meet the definition of major source as defined in this rule.

(Z) "Part 70" or "part 70 regulations" means regulations promulgated by the administrator and published at 40 CFR Part 70.

(AA) "Permit modification" means a revision to a Title V permit that meets the requirements of rule 3745-77-08 of the Administrative Code.

(BB) "Permit revision" means any permit modification or administrative permit amendment.

(CC) "Potential to emit" means the maximum capacity of a stationary source to emit any air pollutant under its physical and operational design. Any physical or operational limitation on the capacity of a source to emit an air pollutant, including air pollution control equipment and restrictions on hours of operation or on the type or amount of material combusted, stored, or processed, shall be treated as part of its design if the limitation or the effect it would have on emissions is federally enforceable or legally and practicably enforceable by the state. Secondary emissions do not count in determining the potential to emit of a stationary source.

(DD) "Proposed permit" means the version of a Title V permit that the director intends to issue and forwards to the administrator for review in compliance with rule 3745-77-08 of the Administrative Code. The preparation and forwarding of a proposed permit shall not constitute a proposed action or a final action of the director.

(EE) "PTIO" means permit-to-install and operate.

(FF) "Regulated air pollutant" means the following:

(1) Nitrogen oxides or any volatile organic compounds;

(2) Any pollutant for which a national ambient air quality standard has been promulgated;

(3) Any pollutant subject to any standard promulgated under Section 111 of the act;

(4) Any class I or II substance subject to a standard promulgated under or established by Title VI of the act; or

(5) Any pollutant subject to a standard promulgated under Section 112 of the act or other requirement established under section 112 including Sections 112(g), (j), and (r) of the act, including the following; (a) any pollutant subject to requirements under Section 112(j) of the act. If the administrator fails to promulgate a standard by the date established pursuant to section 112(e) of the act, any pollutant for which a subject source would be major shall be considered to be regulated as to that source on the date eighteen months after the applicable date established pursuant to Section 112(e) of the act; and (b) any pollutant for which the requirements of Section112(g)(2) of the act have been met, but only with respect to the individual source subject to Section 112(g)(2) of the act.

(GG) "Renewal" means the process by which a permit may be reissued at the end of its term.

(HH) "Research and development sources" shall have the same meaning as in section 3704.01 of the Revised Code.

(II) "Responsible official" means one of the following:

(1) For a corporation: a president, secretary, treasurer, or vice-president of the corporation in charge of a principal business function, or any other person who performs similar policy or decision-making functions for the corporation, or a duly authorized representative of such person if the representative is responsible for the overall operation of one or more manufacturing, production, or operating facilities applying for or subject to a permit and either;

(a) The facilities employ more than two hundred fifty persons or have gross annual sales or expenditures exceeding twenty five million dollars (in second quarter 1980 dollars); or

(b) The delegation of authority to such representatives is approved in advance by the director;

(2) For a partnership or sole proprietorship: a general partner or the proprietor, respectively;

(3) For a municipality or state, federal, or other public agency: either a principal executive officer or ranking elected official. For purposes of these regulations, a principal executive officer of a federal agency includes the chief executive officer having responsibility for the overall operations of a principal geographic unit of the agency (e.g., a regional administrator of the United States environmental protection agency); or

(4) For affected sources:

(a) The designated representative insofar as actions, standards, requirements, or prohibitions under Title IV of the act or the regulations promulgated thereunder are concerned; and

(b) The designated representative for any other purposes under these regulations.

(JJ) "Significant emissions unit" means any air contaminant emission activity or emissions unit regulated pursuant to this chapter, but does not include air contaminant emission units or activities;

(1) Described in paragraphs (V)(1) to (V)(4) of this rule; or

(2) Identified as trivial air contaminant emission activities for preparing Title V permit applications in Ohio environmental protection agency's "Engineering Guide 62."

(KK) "Stationary source" or "source" means any building, structure, facility, or installation that emits or may emit any regulated air pollutant or any pollutant listed under Section 112(b) of the act.

(LL) "Statement of basis" or "SOB" means a statement that sets forth the legal and factual basis for the draft permit conditions (including references to the applicable statutory or regulatory provisions).

(MM) "Synthetic minor source" means a stationary source that would be classified as a major source in the absence of restrictions on the potential to emit of the source.

These restrictions include those that are federally enforceable and those that are legally and practicably enforceable by the state.

(NN) "Title I modification" or "modification under any provision of Title I of the act" means any modification under Sections 111 or 112 of the act and any major modification under Part C or D of Title I of the act.

(OO) "Title V permit" or "permit" (unless the context suggests otherwise) means any permit or group of permits covering a Title V source that is issued, renewed, amended, or modified pursuant to this chapter.

(PP) "Title V source" means any source subject to the permitting requirements of this chapter, as provided in rule 3745-77-02 of the Administrative Code.

(QQ) "TPY" means tons per year.

(RR) "Uncontrolled potential emissions" means the calculated annual emissions rate without any air pollution controls assuming twenty-four hours per day and three hundred sixty-five days per year of operation. If the emission unit has an inherent physical limitation, then the number of hours per day and days per year can be restricted to the maximum possible under the inherent physical limitation.

(SS) Referenced materials. This chapter includes references to certain matter or materials. The text of the referenced materials is not included in the rules contained in this chapter. Information on the availability of the referenced materials as well as the date of, and/or the particular edition or version of the material is included in this rule. For materials subject to change, only the specific versions specified in this rule are referenced. Material is referenced as it exists on the effective date of this rule. Except for subsequent annual publication of existing (unmodified) Code of Federal Regulation compilations, any amendment or revision to a referenced document is not applicable unless and until this rule has been amended to specify the new dates.

(1) Availability. The referenced materials are available as follows:

(a) Clean Air Act. Information and copies may be obtained by writing to: "Superintendent of Documents, Attn: New Orders, PO Box 371954, Pittsburgh, PA 15250-7954." The full text of the act as amended in 1990 is also available in electronic format at www.epa.gov/oar/caa/. A copy of the act is also available for inspection and copying at "The State Library of Ohio."

(b) Code of Federal Regulations. Information and copies may be obtained by writing to: "Superintendent of Documents, Attn: New Orders, PO Box 371954, Pittsburgh, PA 15250-7954." The full text of the CFR is also available in electronic format at www.access.gpo.gov/nara/cfr/. The CFR

compilations are also available for inspection and copying at most public libraries and "The State Library of Ohio."

(c) Engineering guides. Information and copies may be obtained by writing to: "Ohio EPA Division of Air Pollution Control, PO Box 1049, Columbus, Ohio 43216-1049." The full texts of the engineering guides are also available in electronic format at http://www.epa.ohio.gov/dapc/engineer/eguides.aspx. Ohio EPA engineering guides are also available for inspection and copying at the "State Library of Ohio."

(d) North American industry classification system (NAICS) codes. Information and copies may be obtained by contacting the national technical information service at 1-800-553-6847. The codes are also available in electronic format at www.census.gov/epcd/www/naics.html.

(e) Ohio EPA weekly review. Information and copies may be obtained by writing to: "Ohio EPA Legal Department, PO Box 1049, Columbus, Ohio, 43216-1049." The full text of the Ohio EPA Weekly Review is also available in electronic format at http://epa.ohio.gov/legal/pubnots.aspx. The Ohio EPA Weekly Review compilations are also available for inspection and copying at most Ohio public libraries and "The State Library of Ohio."

(f) Standard industrial classification manual (SICM). Information and copies may be ordered by writing to: "U.S. Department of Commerce, Technology Administration, National Technical Information Service, Springfield, Virginia, 22161." or by calling 1-800-553-6847. A copy of the manual is also available for inspection and copying at most public libraries and "The State Library of Ohio."

(2) Referenced materials.

(a) 40 CFR 61.145; "Standard for demolition and renovation;" 55 FR 48419, Nov. 20, 1990; 56 FR 1669, Jan. 16, 1991.

(b) 40 CFR 70.3; "Applicability;" 57 FR 32295, July 21, 1992, as amended at 70 FR 75346, Dec. 19, 2005.

(c) 40 CFR 70.4; "State program submittals and transition;" 57 FR 32295, July 21, 1992, as amended at 61 FR 31448, June 20, 1996; 61 FR 56370, Oct. 31, 1996; 66 FR 27010, May 15, 2001.

(d) 40 CFR 70.5; "Permit applications;" as published in the July 1, 2009 Code of Federal Regulations.

(e) 40 CFR 70.8; "Permit review by EPA and affected States;" as published in the July 1, 2009 Code of Federal Regulations.

(f) 40 CFR Part 2; "Public information;" as published in the July 1, 2009 Code of Federal Regulations.

(g) 40 CFR Part 52; "Approval and promulgation of implementation plans;" as published in the July 1, 2009 Code of Federal Regulations.

(h) 40 CFR Part 60, Subpart AAA; "Standards of Performance for New Residential Wood Heaters;" 53 FR 5873-5874, Feb. 26, 1988, as amended at 53 FR 12009, Apr. 12, 1988; 53 FR 14889, Apr. 26, 1988; 57 FR 5328, Feb. 13, 1992; 60 FR 33925, June 29, 1995; 53 FR 5873, Feb. 26, 1988; 63 FR 64874, Nov. 24, 1998; 64 FR 7466, Feb. 12, 1999; 65 FR 61763-61764, Oct. 17, 2000.

(i) 40 CFR Part 61, Subpart M; "National Emission Standard for Asbestos;" 49 FR 13661, Apr. 5, 1984 as amended by 49 FR 25453, June 21, 1984; 51 FR 8199, Mar. 10, 1986; 53 FR 36972, Sept. 23, 1988; 55 FR 48414, 48416, 48419, 48424, 48429-48433, Nov. 20, 1990; 56 FR 1669, Jan. 16, 1991; 55 FR 48424, Nov. 20, 1991; 60 FR 31920, June 19, 1995; 64 FR 7467, Feb. 12, 1999; 68 FR 54793, Sept. 18, 2003; 69 FR 43324, July 20, 2004.

(j) 40 CFR Part 63, Subpart M; "National Perchloroethylene Air Emission Standards for Dry Cleaning Facilities;" 58 FR 49376, Sept. 22, 1993, as amended at 58 FR 66289, Dec. 20, 1993; 61 FR 27788, June 3, 1996; 61 FR 49265, Sept. 19, 1996; 64 FR 69643, Dec. 14, 1999; 68 FR 37347, June 23, 2003; 70 FR 75345, Dec. 19, 2005; 71 FR 42743, July 27, 2006; 71 FR 55280, Sept. 21, 2006.

(k) 40 CFR Part 63, Subpart N; "National Emission Standards for Chromium Emissions From Hard and Decorative Chromium Electroplating and Chromium Anodizing Tanks;" 60 FR 4963, Jan. 25, 1995, as amended at ; 60 FR 33122, June 27, 1995; 61 FR 27787, June 3, 1996; 62 FR 4465, Jan. 30, 1997; 62 FR 42920, Aug. 11, 1997; 64 FR 69643, 68 FR 37347, June 23, 2003; Dec. 14, 1999; 69 FR 42894, July 19, 2004; 70 FR 75345, Dec. 19, 2005; 71 FR 20456, Apr. 20, 2006.

(l) 40 CFR Part 63, Subpart O; "Ethylene Oxide Emissions Standards for Sterilization Facilities;" 59 FR 62589, Dec. 6, 1994, as amended at 61 FR 27788, June 3, 1996; 63 FR 66994, Dec. 4, 1998; 64 FR 67793, Dec. 3, 1999; 64 FR 69643, Dec. 14, 1999; 66 FR 55582, Nov. 2, 2001; 68 FR 37348, June 23, 2003; 70 FR 75345, Dec. 19, 2005.

(m) 40 CFR Part 63, Subpart T; "National Emission Standards for Halogenated Solvent Cleaning;" 59 FR 61805-61818, Dec. 2, 1994; 59 FR 67750, Dec.

30, 1994, as amended at 60 FR 29485, June 5, 1995; 63 FR 24751, May 5, 1998; 63 FR 68400, Dec. 11, 1998; 64 FR 67798-67802, Dec. 3, 1999; 64 FR 69643, Dec. 14, 1999; 65 FR 54422-54423, Sept. 8, 2000; 68 FR 37349, June 23, 2003; 70 FR 75345, Dec. 19, 2005; 72 FR 25157, May 3, 2007.

(n) 40 CFR 63, Subpart RRR; "National Emission Standards for Hazardous Air Pollutants for Secondary Aluminum Production;" 65 FR 15710, Mar. 23, 2000, as amended at 67 FR 59791, Sept. 24, 2002; 67 FR 79814, Dec. 30, 2002; 69 FR 53984, Sept. 3, 2004; 70 FR 57517, Oct. 3, 2005; 70 FR 75346, Dec. 19, 2005; 71 FR 20461, Apr. 20, 2006.

(o) 40 CFR Part 70; "State Operating Permit Programs;" Federal Register Vol. 57, No. 140, July 21, 1992 as amended at 61 FR 31448, June 20, 1996; 61 FR 56370, Oct. 31, 1996; 66 FR 27010, May 15, 2001; 66 FR 59166, Nov. 27, 2001; 69 FR 31505, June 3, 2004.

(p) 40 CFR Part 72; "Permits Regulation;" as published in the July 1, 2009 Code of Federal Regulations.

(q) Clean Air Act; contained in 42 USC 7401 to 7671q; "The Public Health and Welfare-Air Pollution Prevention and Control;" published January 8, 2008 in supplement I of the 2006 edition of the United States Code.

(r) Engineering Guide 62; "Identification of Trivial Air Contaminant Emission Activities for Preparing Title V Permit Applications;" most current form as reviewed and approved by the Ohio EPA division of air pollution control; as issued November 6, 1995.

(s) Part C of Title I, of the Clean Air Act; contained in 42 USC 7470 to 7492 "Prevention of significant deterioration of air quality;" published January 8, 2008 in supplement I of the 2006 edition of United States Code.

(t) Part D of Title I of the Clean Air Act; contained in 42 USC 7501 to 7515; "Plan Requirements for Non Attainment Areas;" published January 8, 2008 in Supplement I of the 2006 edition of the United States Code.

(u) Section 110 of the Clean Air Act; contained in 42 USC 7410; "State implementation plans for national primary and secondary ambient air quality standards;" published January 8, 2008 in supplement I of the 2006 edition of the United States Code.

(v) Section 111 of the Clean Air Act; contained in 42 USC 7411; "Standards of performance for new stationary sources;" published January 8, 2008 in supplement I of the 2006 edition of the United States Code.

(w) Section 112 of the Clean Air Act; contained in 42 USC 7412; "Hazardous Air Pollutants;" published January 8, 2008 in supplement I of the 2006 edition of the United States Code.

(x) Section 114 of the Clean Air Act; contained in 42 USC 7414; "Recordkeeping, inspections, monitoring, and entry;" published January 8, 2008 in supplement I of the 2006 edition of the United States Code.

(y) Section 123 of the Clean Air Act; contained in 42 USC 7423; "Stack heights;" published January 8, 2008 in supplement I of the 2006 edition of the United States Code.

(z) Section 129 of the Clean Air Act; contained in 42 USC 7429; "Solid Waste Combustion;" published January 8, 2008 in supplement I of the 2006 edition of the United States Code.

(aa) Section 182 of the Clean Air Act; contained in 42 USC 7511a; "Plan submissions and requirements;" published January 8, 2008 in supplement I of the 2006 edition of the United States Code.

(bb) Section 183 of the Clean Air Act; contained in 42 USC 7511b; "Federal ozone measures;" published January 8, 2008 in supplement I of the 2006 edition of the United States Code.

(cc) Section 184 of the Clean Air Act; contained in 42 USC 7511c; "Control of interstate ozone air pollution;" published January 8, 2008 in supplement I of the 2006 edition of the United States Code.

(dd) Section 302 of the Clean Air Act; contained in 42 USC 7602; "Definitions;" published January 8, 2008 in supplement I of the 2006 edition of the United States Code.

(ee) Section 303 of the Clean Air Act; contained in 42 USC 7603; "Emergency powers;" published January 8, 2008 in supplement I of the 2006 edition of the United States Code.

(ff) Section 328 of the Clean Air Act; contained in 42 USC 7627; "Air pollution from Outer Continental Shelf activities;" published January 8, 2008 in supplement I of the 2006 edition of the United States Code.

(gg) Section 402 of the Clean Air Act, contained in 42 USC 7651a; "Definitions;" published January 8, 2008 in supplement I of the 2006 Edition of the United States Code.

(hh) Section 408 of the Clean Air Act; contained in 42 USC 7651g; "Permits and compliance plans;" published January 8, 2008 in supplement I of the 2006 Edition of the United States Code.

(ii) Section 502 of the Clean Air Act; contained in 42 USC 7661;" Permit Programs;" published January 8, 2008 in supplement I of the 2006 Edition of the United States Code.

(jj) Section 503 of the Clean Air Act; contained in 42 USC 7661b; "Permit applications;" published January 8, 2008 in supplement I of the 2006 Edition of the United States Code.

(kk) Section 504 of the Clean Air Act; contained in 42 USC 7661c; "Permit requirements and conditions;" published January 8, 2008 in supplement I of the 2006 Edition of the United States Code.

(ll) Standard industrial classification manual; United States. Office of management and budget. Last amended 1988.

(mm) Title I of the Clean Air Act, contained in 42 USC 7401 to 7515; "Air Pollution Prevention and control;" published January 8, 2008 in supplement I of the 2006 edition of the United States Code.

(nn) Title IV of the Clean Air Act; contained in 42 USC 7651 to 7651o; "Acid Deposition Control;" published January 8, 2008 in supplement I of the 2006 edition of the United States Code.

(oo) Title V of the Clean Air Act, contained in 42 USC 7661 to 7661f; "Permits;" published January 8, 2008 in supplement I of the 2006 edition of the United States Code.

(pp) Title VI of the Clean Air Act; contained in 42 USC 7671 to 7671q; "Stratospheric Ozone Protection;" published January 8, 2008 in supplement I of the 2006 edition of the United States Code.

Effective: 02/14/2010

R.C. 119.032 review dates: 11/23/2009 and 02/14/2015

CERTIFIED ELECTRONICALLY
Certification

02/03/2010
Date

Promulgated Under: 119.03
Statutory Authority: 3704.03(E), 3704.03(G), 3704.03(X), 3704.036
Rule Amplifies: 3704.036
Prior Effective Dates: 04/20/94, 04/27/98, 11/30/01, 11/29/02, 09/16/03, 12/14/07

3745-77-02 **Prohibition and applicability.**

[Comment: For dates of non-regulatory government publications, publications of recognized organizations and associations, federal rules, and federal statutory provisions referenced in this rule, see paragraph (SS) of rule 3745-77-01 of the Administrative Code titled "Referenced materials."]

(A) Prohibitions.

Except as provided in paragraph (H)(1)(a) of rule 3745-77-07, and paragraphs (C)(1)(f) and (C)(2)(e) of rule 3745-77-08 of the Administrative Code and in the following sentence, the owner or operator of a Title V source shall not operate such source after the date that a timely and complete Title V permit application is required to be submitted under this chapter, except in compliance with a permit issued under this chapter. If the owner or operator of a Title V source submits a timely and complete application for permit issuance or renewal, the failure to have a Title V permit is not a violation of this chapter until the director takes final action on the application. This protection shall cease to apply upon the effectiveness of the director's final determination that the application is not complete pursuant to paragraphs (A) and (B) of rule 3745-77-05 of the Administrative Code.

(B) Title V sources. The following sources are subject to the permitting requirements under this chapter unless they are exempted under paragraph (C) of this rule:

(1) Any major source;

(2) Any source, including an area source, subject to a standard or other requirement under Section 111 of the act;

(3) Any source, including an area source, subject to a standard or other requirement under Section 112 of the act, except that a source is not required to obtain a permit solely because it is subject to regulations or requirements under Section 112(r) of the act;

(4) Any affected source; and

(5) Any source in a source category designated by the administrator pursuant to 40 CFR Part 70.3.

(C) Exemptions.

(1) All sources listed in paragraph (B) of this rule that are not major sources, affected sources, or solid waste incineration units required to obtain a permit pursuant to Section 129(e) of the act, are exempt from the obligation to obtain a Title V permit unless required to do so under rules promulgated by the administrator.

(2) In the case of nonmajor sources subject to a standard or other requirement promulgated under either Section 111 or 112 of the act after July 21, 1992, such nonmajor sources shall become subject to the Title V permitting requirements if so required by the standard or other requirement adopted by the administrator.

(3) Sources in the following source categories are exempted from the obligation to obtain a Title V permit under these rules:

(a) All sources and source categories that would be required to obtain a permit solely because they are subject to 40 CFR Part 60, Subpart AAA - "Standards of Performance for New Residential Wood Heaters;" and

(b) All sources and source categories that would be required to obtain a permit solely because they are subject to 40 CFR Part 61, Subpart M - "National Emission Standard for Hazardous Air Pollutants for Asbestos;" 40 CFR 61.145 "Standard for Demolition and Renovation."

(c) All sources and source categories that would be required to obtain a permit solely because they are subject to 40 CFR Part 63, Subpart M - "Perchloroethylene Dry Cleaning."

(d) All sources and source categories that would be required to obtain a permit solely because they are subject to 40 CFR Part 63, Subpart N - "Hard and Decorative Chromium Electroplating and Chromium Anodizing."

(e) All sources and source categories that would be required to obtain a permit solely because they are subject to 40 CFR Part 63, Subpart O - "Commercial Ethylene Oxide Sterilization."

(f) All sources and source categories that would be required to obtain a permit solely because they are subject to 40 CFR Part 63, Subpart T - "Halogenated Solvent Cleaning."

(g) All sources and source categories that would be required to obtain a permit solely because they are subject to 40 CFR Part 63, Subpart RRR - "Secondary Aluminum Production."

(4) Synthetic minor sources. Synthetic minor sources are exempted from the requirement for a Title V permit and all other requirements of this chapter.

(D) Opt-in sources.

The owner or operator of a source that is not a Title V source under paragraph (B) of this rule may choose to have the source permitted under the provisions of this chapter by submitting an application for a Title V permit. The permit application

shall be processed in the same manner as permit applications for non-exempt Title V sources.

(E) Emissions units and Title V sources.

(1) The federally enforceable portion of the permit shall include all applicable requirements for all relevant emissions units at the major source as specified in paragraph (A) of rule 3745-77-07 of the Administrative Code.

(2) For any non major source subject to this rule, the director shall include in the permit all requirements applicable to emissions units that cause the source to be subject to a Title V permit.

(F) Fugitive emissions. Fugitive emissions information from a Title V source shall be included in the permit application and the permit in the same manner as stack emissions, regardless of whether the source category in question is included in the list of sources contained in the definition of major source.

(G) Insignificant activities and emissions levels. Insignificant activities and emissions levels shall be exempted from the permit application requirements of this rule except for research and development emission units whose emission levels exceed the requirements specified in paragraph (X)(1) or (X)(3) of rule 3745-77-01 of the Administrative Code, provided that insignificant emission activities that are exempted because of size or production rate shall be identified in the permit application. Nothing in this paragraph shall affect the determination of whether a stationary source is a major source.

(H) Applicability determinations. Upon written request of a Title V permit applicant, the director shall make a determination of the applicability or inapplicability of any provision or class of requirements under the act to an emissions unit or stationary source and shall include that determination or a concise summary of it in the applicant's Title V permit.

Effective: 02/14/2010

R.C. 119.032 review dates: 11/23/2009 and 02/14/2015

CERTIFIED ELECTRONICALLY
Certification

02/03/2010
Date

Promulgated Under: 119.03
Statutory Authority: 3704.03(E), 3704.03(G), 3704.03(X), 3704.036
Rule Amplifies: 3704.036
Prior Effective Dates: 04/20/94, 9/16/03

3745-77-03 **Content of a permit application.**

[Comment: For dates of non-regulatory government publications, publications of recognized organizations and associations, federal rules, and federal statutory provisions referenced in this rule, see paragraph (SS) of rule 3745-77-01 of the Administrative Code titled "Referenced materials."]

(A) Standard application form. The owner or operator of a source that is subject to the Title V permit program as provided in rule 3745-77-02 of the Administrative Code shall submit Title V permit applications in the manner and form prescribed by the director for that purpose. The applicant shall submit the information required by this rule for each emissions unit at the source to be permitted, except for insignificant activities and emissions levels as specified in paragraph (G) of rule 3745-77-02 of the Administrative Code. The applicant must identify any such insignificant activities and emissions levels that are exempted because of size or production rate. An applicant may not omit information for an emissions unit, including information for insignificant activities or emission levels, that is necessary to determine the applicability of any applicable requirement, to impose any applicable requirement, or to evaluate the fee amount required under section 3745.11 of the Revised Code.

(B) Option for single or multiple permits. A Title V permit applicant may request a single permit for a stationary source with multiple Title V emissions units, or a separate permit for any one or more emissions units at the same facility required to have a Title V permit. The director shall honor all such requests based on proper definitions of emissions units.

(C) Required information. The standard application form shall require, and the applicant shall provide, the following information:

(1) Identifying information, including company name and address (or plant name and address if different from the company name or address), owner's name and statutory agent, telephone number and names of plant site manager or other on-site contact, and application or premise number(s) from any previous permits under Chapter 3745-31 of the Administrative Code;

(2) A description of the source's processes and products (by standard industrial classification code or North American industry classification system) including any associated with each alternate operating scenario identified by the source;

(3) The following emission-related information:

(a) All emissions of each regulated air pollutant for which the source is major, and an estimate of all emissions of each other regulated air pollutant for which the source is regulated. The application shall describe all emissions of regulated air pollutants emitted from any emissions unit, except where

such units are exempted as de minimis in rule 3745-15-05 of the Administrative Code, or exempted in paragraphs (A)(1) to (A)(3) of rule 3745-31-03 of the Administrative Code. The applicant shall provide additional information related to such emissions of air pollutants sufficient to verify which requirements are applicable to the source, and other information that may be necessary to determine the amount of any permit fees owed under the fee schedule approved pursuant to Chapter 3745-78 of the Administrative Code. All emission estimates shall be performed in accordance with reasonable, appropriate and available engineering techniques;

(b) Identification and description of all points of emissions described in paragraph (C)(3)(a) of this rule, in sufficient detail to establish both the basis for fees and the applicability of any applicable requirement;

(c) Emissions rates in TPY, and in such terms as are necessary to establish compliance consistent with the applicable standard reference test method, if any;

(d) Information regarding fuels, fuel use, raw materials, production rates, and operating schedules, to the extent such information is needed to determine or regulate emissions;

(e) Identification and description of air pollution control equipment and compliance monitoring devices or activities;

(f) Limitations on source operations affecting emissions or any work practice standards, where applicable, for all regulated air pollutants at the Title V source;

(g) Other information required by any applicable requirement (including information related to stack height limitations developed pursuant to Section 123 of the act);

(h) Calculations on which the information in paragraphs (C)(3)(a) to (C)(3)(g) of this rule is based; and

(i) Related information necessary to establish voluntary restrictions in the permit to avoid federally applicable requirements pursuant to paragraph (B) of rule 3745-77-07 of the Administrative Code.

(4) The following air pollution control requirements:

(a) Citation and description of all applicable requirements; and

(b) Description of or reference to any applicable test method for determining compliance with each applicable requirement;

(5) Other specific information as necessary to implement and enforce other applicable requirements of the act or of this chapter, including:

(a) Information on emissions and controls relevant to establishing a case-by-case emission limitation or standard under Section 112 of the act, or to determine the applicability of such requirements;

(b) A proposed compliance date for any standard under Section 112(d), 112(h), or 112(j) of the Clean Air Act that was promulgated after the applicant has received a final MACT determination according to rule 3745-31-28 of the Administrative Code, and that does not specify a compliance date for sources that have received a final case-by-case MACT determination. The proposed compliance date shall be approved by the director, and in no case shall the compliance date be more than eight years from the date of promulgation of the standard.

(6) Any requests for alternative or multiple operating scenarios or anticipated changes in emissions during the term of the permit, together with the information under paragraphs (C)(3)(a) to (C)(3)(h) of this rule for each such scenario or change;

(7) An explanation of any proposed exemptions from otherwise applicable requirements;

(8) Any request for alternative emission limits, together with information necessary for the director to define alternative limits requested by the permit applicant under division (E) of section 3704.03 and division (K) of section 3704.036 of the Revised Code;

(9) Compliance plan. Description of the compliance status of the Title V source with respect to all applicable requirements, which shall include the following:

(a) For all applicable requirements with which the source is in compliance, a statement that the source will continue to comply with such requirements;

(b) For all applicable requirements that will become effective during the permit term, a statement that the source will meet such requirements on a timely basis. A statement that the source will meet in a timely manner such requirements that become effective during the permit term shall satisfy this provision, unless a more detailed plan or schedule is required by the requirement;

(c) For applicable requirements for which the source is not in compliance at the time of permit issuance, a narrative description of how the source will achieve compliance with such requirements and a schedule of compliance. The compliance schedule shall include a schedule of remedial measures, including an enforceable sequence of actions with milestones, leading to compliance with any applicable requirements for which the source will be in noncompliance at the time of permit issuance. This compliance schedule shall resemble and be at least as stringent as that contained in any judicial consent decree or administrative order to which the source is subject. Any such schedule of compliance shall be supplemental to, and shall not sanction noncompliance with the applicable requirements on which it is based;

(d) A schedule for submission of certified progress reports no less frequently than every six months for sources required to have a schedule of compliance to remedy a violation;

(e) The compliance plan content requirements specified in paragraphs (C)(9)(a) to (C)(9)(d) of this rule shall apply and be included in the acid rain portion of a compliance plan for an affected source, except as specifically superseded in regulations promulgated under Title IV of the act with regard to the schedule and method(s) the source will use to achieve compliance with the acid rain emissions limitations; and

(f) If the owner or operator of the source is required to develop and register a risk management plan pursuant to Section 112(r) of the act, the applicant shall specify the compliance status of the requirement to register such a plan;

(10) Compliance certification:

(a) A certification of compliance status with all applicable requirements by a responsible official consistent with paragraph (D) of this rule and Section 114 (a)(3) of the act;

(b) A statement of the methods used for determining compliance, including a description of monitoring, recordkeeping, and reporting requirements and test methods;

(c) A schedule for submission of compliance certifications during the Title V permit term, to be submitted annually or more frequently if specified by the applicable requirement;

(d) A statement indicating the source's compliance status with any applicable enhanced monitoring and compliance certification requirements of the act; and

(e) If the owner or operator of the source is required to develop and register a risk management plan pursuant to Section 112(r) of the act, the applicant shall certify compliance with the requirement to register such a plan; and

(11) The information specified in nationally standardized forms for the acid rain portions of applications and compliance plans, as required by regulations promulgated under Title IV of the act.

(D) Certification of truth, accuracy, and completeness.

Any application form, report, or compliance certification submitted pursuant to this chapter shall contain certification by a responsible official of truth, accuracy, and completeness. This certification and any other certification requirement under this chapter shall state that, based on information and belief formed after reasonable inquiry, the statements and information in the document are true, accurate, and complete.

(E) Confidential information.

The application shall clearly identify any information the applicant claims is confidential as business information under 40 CFR Part 2 or a trade secret as defined in section 1333.51 of the Revised Code, and shall include a brief statement of the basis for any such claim. Information claimed to be confidential shall not thereafter be released except as provided below:

(1) If the administrator requests information subject to a claim of confidentiality, the director shall promptly require in writing that the applicant submit the information and claim of confidentiality directly to the administrator. If the applicant fails to submit such information and claim of confidentiality to the administrator within thirty days after receipt of the director's request to do so, the director shall submit such information and claim of confidentiality directly to the administrator; or

(2) If a third party request information subject to a claim of confidentiality, such information shall be released only after the director finds the claim of confidentiality is not justified, notifies the applicant of the finding, and any appellate review is either not pursued or exhausted.

(F) Duty to supplement application.

Any applicant who fails to submit any relevant facts or who has submitted incorrect information in a permit application shall, upon becoming aware of such failure or incorrect submittal, promptly submit such supplementary facts or corrected information. In addition, an applicant shall provide additional information as

necessary to address any requirements that become applicable to the source after the date it filed a complete application but prior to release of a draft permit.

Effective: 02/14/2010

R.C. 119.032 review dates: 11/23/2009 and 02/14/2015

CERTIFIED ELECTRONICALLY
Certification

02/03/2010
Date

Promulgated Under: 119.03
Statutory Authority: 3704.03(E), 3704.03(G), 3704.03(X), 3704.036
Rule Amplifies: 3704.036
Prior Effective Dates: 4/20/94, 7/25/98

3745-77-04 **Transition and application filing dates.**

[Comment: For dates of non-regulatory government publications, publications of recognized organizations and associations, federal rules, and federal statutory provisions referenced in this rule, see paragraph (SS) of rule 3745-77-01 of the Administrative Code titled "Referenced materials."]

(A) Compliance with existing permits.

Prior to the issuance or denial of the initial Title V permit, the owner or operator of a source for which a timely and complete Title V permit application has been filed pursuant to this rule and rule 3745-77-05 of the Administrative Code shall continue to comply with all effective terms and conditions of permit-to-install, permits-to-install and operate and permits-to-operate that were issued to one or more emissions units at such source in accordance with present or former Chapter 3745-31 or former Chapter 3745-35 of the Administrative Code. The filing of a timely and complete Title V permit application shall have the same effect as filing an application for a renewal of a permit-to-install and operate for purposes of section 119.06 of the Revised Code.

(B) Initial application filing and processing.

Sources required to obtain a Title V permit shall submit an application no later than the date specified below based on the location of the source:

(1) Sources that are located within the areas identified in appendix A to this rule shall file an application in accordance with rule 3745-77-03 of the Administrative Code by no later than sixty days after approval of the Title V permit program.

(2) Sources that are located within the areas identified in appendix B to this rule shall file an application in accordance with rule 3745-77-03 of the Administrative Code by no earlier than sixty-one days after approval of the Title V permit program and no later than one hundred eighty days after approval of the Title V permit program.

(3) Sources that are located within the areas identified in appendix C to this rule shall file an application in accordance with rule 3745-77-03 of the Administrative Code by no earlier than one hundred eighty-one days after approval of the Title V permit program and no later than three hundred sixty-five days after approval of the Title V permit program.

(4) Sources subject to paragraph (B)(1) or (B)(2) of this rule may submit a request at least forty-five days prior to the Title V permit application submittal deadline and request up to a ninety day extension of time to submit a Title V permit

application. The director shall act on the request within thirty days or the request will automatically be approved.

(5) Sources within the jurisdiction of the same local air pollution control agency or district office may, by mutual consent of the director and the owners or operators of the sources involved, trade the deadline dates for the submission of initial Title V permit applications under this paragraph.

(C) Notwithstanding the provisions of paragraph (B) of this rule, no initial Title V permit application shall be due less than one year after the effective date of this rule.

(D) A timely application for a source applying for a Title V permit for the first time, other than a source required to file under paragraph (B) of this rule, is one that is submitted within twelve months after the source becomes subject to the Title V permit program. Sources required to have a preconstruction permit under Part C or Part D of Title I of the act shall submit a complete Title V permit application within twelve months after commencing operation, provided that where an existing Title V permit would prohibit construction or operation of such new or modified source, a Title V permit revision must be obtained before operation of such new or modified source.

(E) Title V permit renewal applications shall be filed no earlier than eighteen months and no later than six months prior to the expiration of the Title V permit.

(F) Applications for initial phase II acid rain permits shall be submitted to the director by January 1, 1996, for sulfur dioxide, and by January 1, 1998, for nitrogen oxides.

(G) An owner or operator of a Title V source required to meet the requirements of Section 112(g) of the act shall file a Title V permit application within twelve months after commencing operation of a modification subject to that section.

(H) An application filed by the appropriate due date in this rule, and, where necessary, supplemented in accordance with rule 3745-77-05 of the Administrative Code, shall be deemed timely.

Effective: 02/14/2010

R.C. 119.032 review dates: 11/23/2009 and 02/14/2015

CERTIFIED ELECTRONICALLY
Certification

02/03/2010
Date

Promulgated Under: 119.03
Statutory Authority: 3704.03(E), 3704.03(G), 3704.03(X), 3704.036
Rule Amplifies: 3704.036
Prior Effective Dates: 4/20/94

3745-77-04 Appendix A

Areas of the state where paragraph (B)(1) of rule 3745-77-04 of the Administrative Code is applicable.

County	Description of Area
Ashtabula	entire county
Butler	entire county
Clark	entire county
Clermont	entire county
Clinton	entire county
Columbiana	entire county
Cuyahoga	portion of the county located in zip code jurisdictions: 44017, 44022, 44101, 44102, 44103, 44104, 44105, 44106, 44107, 44109
Darke	entire county
Defiance	entire county
Franklin	portion of the county located in zip code jurisdictions: 43002, 43004, 43026, 43081, 43110, 43137, 43201, 43204, 43207 43209, 43210, 43213, 43215
Fulton	entire county
Geauga	entire county
Greene	entire county
Guernsey	entire county
Hamilton	portion of the county located in zip code jurisdictions: 45001, 45002, 45030, 45051, 45052, 45111, 45202, 45203, 45204, 45212
Holmes	entire county
Lake	entire county
Lawrence	portion of the county located in zip code jurisdictions: 45638, 45656, 45659, 45669, 45702
Lucas	portion of the county located in zip code jurisdictions: 43537, 43560, 43566, 43571, 43601, 43604, 43605, 43606, 43607
Medina	entire county
Meigs	entire county
Mercer	entire county
Montgomery	portion of the county located in zip code jurisdictions: 45424, 45439, 45444, 45449, 45459
Morgan	entire county
Muskingum	entire county
Noble	entire county
Ottawa	entire county
Perry	entire county
Preble	entire county
Sandusky	entire county
Shelby	portion of the county located in zip code jurisdictions: 45302, 45306, 45334, 45363
Stark	portion of the county located in zip code jurisdictions: 44601, 44626, 44632,

	44641, 44646, 44648, 44652, 44662
Summit	portion of the county located in zip code jurisdictions: 44087, 44203, 44223, 44224
Tuscarawas	entire county
Warren	entire county
Williams	entire county
Wood	entire county

3745-77-04 Appendix B

Areas of the state where paragraph (B)(2) of rule 3745-77-04 of the Administrative Code is applicable.

County	Description of Areas
Carroll	entire county
Champaign	entire county
Coshocton	entire county
Cuyahoga	portion of the county located in zip code jurisdictions: 44110, 44111, 44112, 44113, 44114, 44115, 44117, 44121, 44123, 44125, 44127
Erie	entire county
Franklin	portion of the county located in zip code jurisdictions: 43216, 43219, 43223, 43227, 43228
Hamilton	portion of the county located in zip code jurisdictions: 45207, 45209, 45210, 45214, 45215, 45216, 45217, 45219, 45221, 45223, 45226, 45227, 45229, 45230, 45231
Hancock	entire county
Hocking	entire county
Highland	entire county
Huron	entire county
Jefferson	entire county
Knox	entire county
Licking	entire county
Logan	entire county
Lorain	entire county
Lucas	portion of the county located in zip code jurisdictions: 43608, 43609, 43611, 43612, 43613, 43614, 43615, 43619, 43624, 43657, 43694
Miami	entire county
Montgomery	portion of the county located in zip code jurisdictions: 45309, 45342, 45354, 45373, 45377, 45401, 45402, 45403
Morrow	entire county
Paulding	entire county
Putnam	entire county
Richland	entire county
Scioto	entire county
Seneca	entire county
Stark	portion of the county located in zip code jurisdictions: 44688, 44701, 44702, 44704 44705, 44707, 44711, 44720, 44730
Summit	portion of the county located in zip code jurisdictions: 44278, 44301, 44304, 44305, 44306, 44308, 44310, 44311, 44312, 44315
Union	entire county

Van wert	entire county
Vinton	entire county
Washington	entire county
Wayne	entire county

3745-77-04 Appendix C

Areas of the state where paragraph (B)(3) of rule 3745-77-04 of the Administrative Code is applicable.

County	Description of Areas
Adams	entire county
Allen	entire county
Ashland	entire county
Athens	entire county
Auglaize	entire county
Belmont	entire county
Brown	entire county
Crawford	entire county
Cuyahoga	portion of the county located in zip code jurisdictions: 44128, 44130, 44131, 44135, 44136, 44137, 44138, 44139, 44141, 44142, 44143, 44145, 44146 and the remainder of county for which the zip code jurisdictions were not listed
Delaware	entire county
Fairfield	entire county
Fayette	entire county
Franklin	portion of the county located in zip code jurisdictions: 43229, 43230 and the remainder of the county for which the zip code jurisdictions were not listed
Gallia	entire county
Hardin	entire county
Hamilton	portion of the county located in zip code jurisdictions: 45232, 45233, 45237, 45239, 45240, 45241, 45242, 45244, 45246 and the remainder of the county for which zip code jurisdictions were not listed
Harrison	entire county
Henry	entire county
Jackson	entire county
Lawrence	portion of the county located in zip code jurisdiction 45680 and the remainder of the county for which the zip code jurisdictions were not listed
Lucas	portion of the county located in zip code jurisdiction 43616 and the remainder of the county for which the zip code jurisdictions were not listed
Madison	entire county
Mahoning	entire county
Marion	entire county
Monroe	entire county Montgomery portion of the county located in zip code jurisdictions: 45404, 45407, 45408, 45414, 45420 and the remainder of the county for which the zip code jurisdictions were not listed
Pickaway	entire county
Pike	entire county
Portage	entire county
Ross	entire county

Shelby	portion of the county located in zip code jurisdiction 45365 and the remainder of the county for which the zip code jurisdictions were not listed
Stark	portion of the county located in zip code jurisdiction 44706 and the remainder of the county for which the zip code jurisdictions were not listed
Summit	portion of the county located in zip code jurisdictions: 44313, 44314, 44316, 44317, 44318, 44320, 44321, 44328
Trumbull	entire county
Wyandot	entire county

All other counties or portions of counties not previously listed.

3745-77-05 **Application completeness determination.**

(A) A complete Title V permit application is one that contains all the information applicable to the facility required pursuant to rule 3745-77-03 or paragraph (D) of rule 3745-77-07 of the Administrative Code, except that applications for permit revisions need supply such information only if it is related to the proposed revision. A complete application shall include a certification by a responsible official of the truth, accuracy, and completeness of the information in the application, based on information and belief formed after reasonable inquiry by the responsible official.

(B)

(1) The director shall promptly provide notice to the applicant for a Title V permit of whether the application is complete. Unless the director determines within sixty days after receipt of the application that the application is not complete, and issues a written notice of such determination as provided in paragraph (B)(2) of this rule, the application shall be deemed to be complete. A completeness determination is not required for modifications processed through minor permit modification procedures contained in rule 3745-77-08 of the Administrative Code

(2) If, during the processing of an application before or after it has been determined or deemed to be complete, the director determines that additional information is necessary in order to evaluate or take final action on the application, the director may request that information in writing from the applicant. Any such request shall identify the information requested with reasonable specificity, provide a basis for the request, and shall provide a reasonable time period, not less than fifteen days, for the applicant's submission of the requested information.

(3) If an applicant fails to make a good faith and timely response to a request for additional information under this rule with regard to an application that the director believes to be incomplete, the director shall offer to meet with the applicant within seven days after issuance of a letter for failure to submit the requested information. If the meeting or meeting offer fails to obtain a complete application from the applicant, the director, without prior hearing, shall make a final determination that the application is not complete. Any such determination shall not become effective until twenty days after notice of the determination is sent to the applicant by certified mail. An incompleteness determination by the director may be appealed in accordance with section 3745.04 and division (D) of section 3704.036 of the Revised Code.

(C) The submittal of a complete Title V permit application shall not affect the applicability of Chapter 3745-31 of the Administrative Code to any source that is required to have a permit-to-install under that chapter.

Effective: 02/14/2010

R.C. 119.032 review dates: 11/23/2009 and 02/14/2015

CERTIFIED ELECTRONICALLY
Certification

02/03/2010
Date

Promulgated Under: 119.03
Statutory Authority: 3704.03(E), 3704.03(G), 3704.03(X), 3704.036
Rule Amplifies: 3704.036
Prior Effective Dates: 4/20/94

3745-77-06 **Application shield.**

(A) If the owner or operator of a Title V source submits a timely and complete initial or renewal application in accordance with rules 3745-77-04 and 3745-77-05, paragraph (D) of rule 3745-77-07, and rule 3745-77-08 of the Administrative Code for initial permit issuance or permit renewal, the facility's failure to have a Title V permit for such source is not a violation of this chapter or Chapter 3704. of the Revised Code until the director takes final action on the permit application.

(B) For purposes of this rule only, an application filed under paragraph (B) of rule 3745-77-04 of the Administrative Code shall not be considered untimely unless it is filed later than one year after approval of the Title V permit program.

Effective: 02/14/2010

R.C. 119.032 review dates: 11/23/2009 and 02/14/2015

CERTIFIED ELECTRONICALLY
Certification

02/03/2010
Date

Promulgated Under: 119.03
Statutory Authority: 3704.03(E), 3704.03(G), 3704.03(X), 3704.036
Rule Amplifies: 3704.036
Prior Effective Dates: 4/20/94

3745-77-07 **Permit content.**

[Comment: For dates of non-regulatory government publications, publications of recognized organizations and associations, federal rules, and federal statutory provisions referenced in this rule, see paragraph (SS) of rule 3745-77-01 of the Administrative Code titled "Referenced materials."]

(A) Standard permit requirements. Each Title V permit shall include the following elements:

(1) Emission limitations and standards. The permit shall include emission limitations and standards, including those operational requirements and limitations that assure compliance with all applicable requirements at the time of issuance.

(a) The Title V permit shall specify authority for each term or condition, and identify any difference in form as compared to the applicable requirement upon which the term or condition is based.

(b) The Title V permit shall state that, where an applicable requirement of the act is more stringent than an applicable requirement of regulations promulgated under Title IV of the act, both provisions shall be incorporated into the permit and shall be federally enforceable.

(c) If the applicable implementation plan so provides, upon an applicant's request, pursuant to division (E) of section 3704.03 and division (K) of section 3704.036 of the Revised Code, that an alternative limit or means of compliance be specified in the Title V permit, and such alternative limit satisfies the criteria set forth in division (E) of section 3704.03 and division (K) of section 3704.036 of the Revised Code, such an alternative emission limit or means of compliance shall be included in the permit upon a showing satisfactory to the director that it is quantifiable, accountable, enforceable, and based on replicable procedures. The applicant shall include in the permit application proposed permit terms and conditions to satisfy the requirements of this paragraph.

(2) Permit duration. The director shall issue Title V permits for a fixed period, not to exceed five years, except as provided in paragraphs (A)(2)(a) to (A)(2)(c) of this rule:

(a) Permits issued to affected sources shall in all cases have a fixed term of five years.

(b) Permits issued to solid waste incineration units combusting municipal waste subject to standards under Section 129(e) of the act shall have a term not to exceed twelve years. Such permits shall be reviewed every five years.

(c) A permit may be terminated, or terminated in part, prior to expiration in accordance with the requirements of paragraph (H) of rule 3745-77-08 of the Administrative Code.

(3) Monitoring and related recordkeeping and reporting requirements.

(a) Each permit shall contain the following requirements with respect to monitoring:

(i) All emissions monitoring and analysis procedures or test methods required under the applicable requirements, including any procedures and methods promulgated pursuant to Sections 114(a)(3) or 504(b) of the act;

(ii) Where the applicable requirement does not require periodic testing or instrumental or noninstrumental monitoring (which may consist of recordkeeping designed to serve as monitoring), periodic monitoring sufficient to yield reliable data from the relevant time period that are representative of the source's compliance with the permit, as reported pursuant to paragraph (A)(3)(c) of this rule. Such monitoring requirements shall assure use of terms, test methods, units, averaging periods, and other statistical conventions consistent with the applicable requirement. Such monitoring requirements may apply to operating parameters, fuels, raw materials, or other reliable indicators of the rate of emissions, or combinations thereof. Recordkeeping provisions may be sufficient to meet the requirements of this paragraph; and

(iii) As necessary, requirements concerning the use, maintenance, and, where appropriate, installation of monitoring equipment or methods.

(b) With respect to recordkeeping, the permit shall incorporate all applicable requirements that relate to recordkeeping and require, where applicable, the following:

(i) Records of required monitoring information that include the following:

(a) The date, place as defined in the permit, and time of sampling or measurements;

(b) The date(s) analyses were performed;

(c) The company or entity that performed the analyses;

(d) The analytical techniques or methods used;

(e) The results of such analyses; and

(f) The operating conditions as existing at the time of sampling or measurement; and

(ii) Retention of records of all required monitoring data and support information for a period of five years from the date the record was created. Support information includes all calibration and maintenance records and all original strip-chart recordings for continuous monitoring instrumentation, and copies of all reports required by the permit. The permit shall specify that records may be maintained in computerized form.

(c) With respect to reporting, the permit shall incorporate all applicable requirements that relate to reporting. The permit shall also require the following:

(i) That the permittee submit a report of any required monitoring every six months. To the extent possible, the schedule for submission of such reports shall be timed to coincide with other periodic reports required by the permit, including the permittee's annual compliance certification.

(ii) That each report submitted under paragraph (A)(3)(c)(i) of this rule shall clearly identify any deviations from the permit requirements that have occurred since the previous report has been submitted.

(iii) That each permit shall require prompt reporting of deviations from federally enforceable permit requirements, including deviations attributable to malfunctions as described in paragraph (B)(1) of rule 3745-15-06 of the Administrative Code, regardless of duration, the probable cause of such deviations, and any corrective actions or preventive measures taken. The requirement to include all deviations attributable to malfunctions in these quarterly deviation reports is in addition to the verbal and written reporting requirements specified in rule 3745-15-06 of the Administrative Code. An exceedance of the visible emission limitations specified in paragraph (A)(1) of rule 3745-17-07 of the Administrative Code that is caused by a malfunction does not need to be reported as a deviation if the owner or operator of the affected air contaminant source or air pollution control equipment complies with the requirements of paragraph (A)(3)(c) of rule 3745-17-07 of the Administrative Code. Malfunctions that are reported in accordance with rule 3745-15-06 of the Administrative Code shall be referenced in the deviation reports required by this paragraph. Deviations resulting from approved requests for scheduled maintenance of air pollution control equipment pursuant to paragraph (A) of rule

3745-15-06 of the Administrative Code also shall be reported in accordance with this paragraph.

(iv) Unless otherwise specified in the specific permit terms and conditions for an emissions unit, prompt reporting for the purpose of this rule shall be quarterly for all deviations from emission limitations, operational restrictions, and control device operating parameter limitations (except as prescribed in rule 3745-15-06 of the Administrative Code for malfunctions); and semi-annually for all deviations from monitoring, recordkeeping, and reporting requirements pursuant to paragraph (A)(3)(c)(i) of this rule.

(v) That each report required under paragraph (A)(3)(c) of this rule shall be signed by a responsible official certifying that, based on information and belief formed after reasonable inquiry, the statements and information in the report are true, accurate, and complete.

(4) Risk management plans. If the owner or operator of the source is required to develop and register a risk management plan pursuant to Section 112(r) of the act, the permit shall specify that the permittee will comply with the requirement to register such a plan.

(5) Title IV provisions. The permit shall include provisions necessary to ensure compliance by an affected source with the requirements of 40 CFR Part 72. The permit shall prohibit emissions exceeding any allowances that the source lawfully holds under Title IV of the act or the regulations promulgated thereunder.

(a) No permit revision shall be required for increases in emissions that are authorized by allowances acquired pursuant to the acid rain program, provided that such increases do not require a permit revision under any other applicable requirement.

(b) No limit shall be placed on the number of allowances held by the source. The source may not, however, use allowances as a defense to noncompliance with any other applicable requirement.

(c) Any such allowance shall be accounted for according to the procedures established in regulations promulgated under Title IV of the act.

(6) Severability clause. The Title V permit shall include a severability clause to ensure the continued validity of the various permit requirements in the event of a challenge to any portions of the permit.

(7) General requirements. The Title V permit shall include provisions stating the following:

(a) The permittee must comply with all conditions of the permit. Any noncompliance with the federally enforceable terms and conditions of the permit constitutes a violation of the act and is grounds for enforcement action or for permit revocation, revocation and reissuance, or modification, or for denial of a permit renewal application.

(b) It shall not be a defense for a permittee in an enforcement action that it would have been necessary to halt or reduce the permitted activity in order to maintain compliance with the federally enforceable conditions of the permit.

(c) The permit may be modified, reopened, revoked, or revoked and reissued, for cause. The filing of a request by the permittee for a permit modification, revocation and reissuance, or revocation, or of a notification of planned changes or anticipated noncompliance does not stay any permit condition.

(d) The permit does not convey any property rights of any sort, or any exclusive privilege.

(e) The permittee shall furnish to the director, upon receipt of a written request and within a reasonable time, any information that the director may request to determine whether cause exists for modifying, reopening, or revoking the permit or to determine compliance with the permit. Upon request, the permittee shall also furnish to the director copies of records required to be kept by the permit. For information claimed to be confidential in the submittal to the director, if the administrator requests such information, the permittee may furnish such records directly to the administrator along with a claim of confidentiality.

(8) Fees. The permit shall provide that the permittee will pay fees to the director in accordance with section 3745.11 of the Revised Code and Chapter 3745-78 of the Administrative Code.

(9) Marketable permit programs. The permit shall provide that no permit revision shall be required under any approved economic incentive, marketable permits, emissions trading, and other similar programs or processes for changes that are provided for in the permit.

(10) Reasonably anticipated operating scenarios. The permit shall include terms and conditions applicable to all operating scenarios described in the permit application unless prohibited by federally enforceable requirements, including all applicable requirements and requirements of this chapter. As approved by the director, the permit shall authorize the permittee to make changes among operating scenarios authorized in the permit without notice, but shall require the permittee, contemporaneous with making a change from one operating scenario

to another, to record in a log at the permitted facility the scenario under which it is operating. The permit shield provided in paragraph (F) of this rule shall apply to all operating scenarios authorized in the permit.

(11) Emissions trading. The permit shall include terms and conditions, if the permit applicant requests them, for the trading of emissions increases and decreases in the permitted facility, to the extent that the applicable requirements provide for trading such increases and decreases without a case-by-case approval of each emissions trade. Such terms and conditions:

(a) Shall include all terms required under paragraphs (A) and (C) of this rule to determine compliance;

(b) May extend the permit shield described in paragraph (F) of this rule to all terms and conditions that allow such increases and decreases in emissions; and

(c) Must meet all applicable requirements and requirements of this chapter.

(12) Reopening for cause. Each issued permit shall include provisions specifying the conditions under which the permit will be reopened prior to the expiration of the permit.

(13) Insignificant activities and emissions levels.

(a) Any insignificant activities and emissions levels that are subject to one or more applicable requirements, shall be listed in the federally enforceable portion of the permit along with the applicable requirements or the identification number of each permit to install that establishes one or more applicable requirements for the insignificant activities and emissions levels. This listing is presumed to satisfy the requirements of paragraph (A)(1) of this rule.

(b) Monitoring, recordkeeping or reporting requirements established for insignificant activities and emissions levels in a permit to install or under applicable rules are presumed adequate to satisfy the monitoring, recordkeeping or reporting requirements of paragraph (A)(3) of this rule for the insignificant activities and emissions levels, unless the director determines otherwise.

(B) Federally enforceable and state enforceable terms and conditions. Federally enforceable terms and conditions shall be identified as such in the permit. Voluntary restrictions established in the permit to avoid federal applicable requirements shall be identified as federally enforceable terms and conditions. Federally enforceable terms and conditions shall be clearly differentiated from terms and conditions that are not required under the act or any applicable requirements and that are imposed pursuant

to state law only. Terms and conditions that are not required under the act or any of its applicable requirements shall be identified as such in the permit and clearly differentiated from those that are.

(1) All terms and conditions of a Title V permit that are required under the act or any of its applicable requirements, including relevant terms and conditions designed to limit the potential to emit of a source, are enforceable by the administrator and citizens under the act.

(2) All other terms and conditions of a Title V permit not described in paragraph (B)(1) of this rule shall not be federally enforceable and shall be enforceable under state law only.

(C) Compliance requirements. The federally enforceable portion of each Title V permit shall contain the following elements with respect to compliance:

(1) Consistent with paragraph (A)(3) of this rule, compliance certification, testing, monitoring, reporting, and recordkeeping requirements sufficient to assure compliance with the federally enforceable terms and conditions of the permit. Any document (including reports) required by a Title V permit shall contain a certification by a responsible official that, based on information and belief formed after reasonable inquiry, the statements in the document are true, accurate, and complete;

(2) Inspection and entry requirements that require that, upon presentation of credentials and other documents as may be required by law, the permittee shall allow the director or an authorized representative of the director to:

(a) Enter upon the permittee's premises where a source is located or emissions-related activity is conducted, or where records must be kept under the conditions of the permit;

(b) Have access to and copy, at reasonable times, any records that must be kept under the conditions of the permit, subject to the protection from disclosure to the public of confidential information consistent with paragraph (E) of rule 3745-77-03 of the Administrative Code;

(c) Inspect at reasonable times any facilities, equipment (including monitoring and air pollution control equipment), practices, or operations regulated or required under the permit; and

(d) As authorized by the act, sample or monitor at reasonable times substances or parameters for the purpose of assuring compliance with the permit and applicable requirements.

(3) A requirement that sources meet in a timely manner applicable requirements that become effective during the permit term and shall contain an approved schedule of compliance for sources that are not in compliance with all applicable requirements at the time of permit issuance. Such a schedule of compliance shall include a schedule of remedial measures, including an enforceable sequence of actions with milestones, leading to compliance with any applicable requirements for which the source will be in noncompliance at the time of permit issuance. Such a schedule of compliance shall resemble and be at least as stringent as that contained in any judicial or administrative order or consent decree to which the source is subject. Any such schedule of compliance shall be supplemental to, and shall not sanction noncompliance with, the applicable requirements on which it is based;

(4) Progress reports consistent with a schedule of compliance in the permit for meeting an applicable requirement. Progress reports must be submitted semiannually, or more frequently if specified in the applicable requirement, or by the director. Progress reports shall contain the following:

(a) Dates for achieving the activities, milestones, or compliance required in the schedule of compliance, and dates when such activities, milestones, or compliance were achieved;

(b) An explanation of why any dates in the schedule of compliance were not or will not be met, and any preventive or corrective measures adopted; and

(5) Requirements for compliance certification with terms and conditions contained in the permit that are federally enforceable, including emission limitations, standards, or work practices. Each permit shall specify:

(a) The frequency (which shall be annual unless the applicable requirement specifies submission more frequently) or submissions of compliance certifications;

(b) In accordance with paragraph (A)(3) of this rule, a means for monitoring the compliance of the source with emissions limitations, standards, and work practices;

(c) A requirement that the compliance certification include the following:

(i) The identification of each term or condition of the permit that is the basis of the certification;

(ii) The permittee's compliance status over the period covered by the certification;

(iii) Whether compliance was continuous or intermittent;

(iv) The method(s) used for determining the compliance status of the source, currently and over the reporting period as required by paragraph (A)(3) of this rule; and

(v) Such other facts as the director may require in the permit to determine the compliance status of the source;

(d) A requirement that all compliance certifications be submitted to the administrator as well as to the director; and

(e) Such additional requirements as may be specified pursuant to Sections 114(a)(3) and 504(b) of the act.

(D) General Title V permits.

(1) The director may issue a general Title V permit to any source class or category if the director concludes that the class or category is appropriate for permitting on a generic basis, including, but not limited to, a class or category that has numerous similar facilities or air contaminant sources, or similar federally applicable requirements. No general permit may be issued for affected sources under the acid rain program unless otherwise provided in regulations promulgated under Title IV of the act.

(2) A general Title V permit may be issued for a source category based upon an application from the owner or operator of a source within the source category or upon the director's own initiative. The director shall, following receipt of an application for a general permit, or upon a determination that issuance of a general permit for a category of sources may be appropriate, follow the same procedures for allowance of a general permit as for any other permit issued under this part.

(3) A general Title V permit may be issued for any of the following purposes:

(a) To establish terms and conditions to implement applicable requirements for a source category or for numerous similar sources; or

(b) To establish federally enforceable caps on emissions from sources in a specified category or from numerous similar sources.

(4) A general Title V permit issued under paragraph (D) of this rule shall identify criteria by which sources may qualify for the general permit. After a general permit has been issued, the owner or operator of any source may submit a request to be covered under the permit. A general permit shall apply to the owner or operator of a facility or air contaminant source only upon application of the owner or operator to, and acceptance by, the director.

(a) A request for coverage under a general permit shall identify the source and provide information sufficient to demonstrate that it falls within the source category covered by the general permit, together with any additional information that may be specified in the general Title V permit. Such request shall conform to the application requirements in the general permit, which may deviate from the application requirements set forth in rule 3745-77-03 of the Administrative Code, provided that such applications meet the requirements of Title V of the act, and include all information necessary to determine qualification for, and to assure compliance with, the general permit.

(b) The director shall act to approve or deny the request for coverage under a general permit within ninety days of receipt.

(c) After a general Title V permit has been issued in accordance with paragraph (D)(4) of this rule, the director may grant requests for authorization to operate under the general Title V permit without repeating the public participation procedures required under rule 3745-77-08 of the Administrative Code.

(5) A copy of the general Title V permit, together with a list of sources approved for coverage under it, shall be kept on file by the director for public review.

(6) A general Title V permit issued under this section shall provide that any source approved for coverage under a general Title V permit shall be entitled to the protection of the permit shield under paragraph (F) of this rule for all operations, emissions, and activities addressed by the general Title V permit. Notwithstanding these shield provisions, the owner or operator of any such source shall be subject to enforcement action for operation without a Title V permit if the source is later determined not to qualify for the conditions and terms of the general permit.

(7) If some, but not all, of a source's operations, emissions, and activities are eligible for coverage under one or more general permits, the owner or operator of the source may apply for and receive coverage under the relevant general permit(s) for the operations, emissions, and activities that are so eligible. If the owner or operator of the source is required under this rule to obtain a permit addressing the remainder of the operations, emissions, and activities at the source, the owner or operator may apply for and receive a permit that addresses specifically only those items not covered by one or more general permits. In such a case, the source's permit shall identify all operations, emissions, and activities that are subject to general permits and incorporate those general Title V permits by reference.

(E) Temporary sources. The director may issue a single permit authorizing emissions from similar operations by the same source owner or operator at multiple temporary locations. The operation must be temporary and involve at least one change of location during the term of the permit. No affected source shall be permitted as a temporary source. Permits for temporary sources shall include the following:

(1) Conditions that will assure compliance with all applicable requirements at all authorized locations;

(2) Requirements that the owner or operator notify the director at least ten days in advance of each change in location; and

(3) Conditions that assure compliance with all other applicable provisions of this rule.

(F) Permit shield.

(1) Each permit issued under this rule shall include a permit shield provision, which shall state that compliance with the terms and conditions of the permit (including terms and conditions established for alternate operating scenarios, emissions trading, and emissions averaging, but excluding terms and conditions for which the permit shield is expressly prohibited under this rule) shall be deemed compliance with the applicable requirements identified and addressed in the permit as of the date of permit issuance.

(2) Upon written request of the permit applicant, the director shall include in the permit, or in a separate written finding issued with the permit, a determination identifying specific requirements or class of requirements that do not apply to the source or to one or more emissions units within the source. The permit applicant shall specify in the request for such a determination the requirements as to which the determination is requested. If the determination is issued in a separate finding, that finding shall be summarized in the permit. The permit shall state that the permit shield applies to any requirements so identified. A request for a determination to amend the shield to requirements deemed inapplicable to a source or an emissions unit may be made either in conjunction with the original permit application or in conjunction with a subsequent application for a permit modification.

(3) Nothing in paragraph (F) of this rule or in the permit shall alter or affect the following:

(a) The provisions of Section 303 of the act, including the authority of the administrator under that section;

(b) The liability of an owner or operator of a source for any violation of applicable requirements prior to or at the time of permit issuance;

(c) Applicable requirements of the acid rain program, consistent with Section 408(a) of the act; or

(d) The ability of the administrator to obtain information from a source pursuant to Section 114 of the act.

(G) Emergencies.

(1) Definition. An "emergency" means any situation arising from sudden and reasonably unforeseeable events beyond the control of the source, including acts of god, which situation requires immediate corrective action to restore normal operation, and that causes the source to exceed a technology-based emission limitation under the permit, due to unavoidable increases in emissions attributable to the emergency. An emergency shall not include noncompliance caused by improperly designed equipment, lack of preventive maintenance, careless or improper operation, or operator error.

(2) Effect of an emergency. An emergency constitutes an affirmative defense to an action brought for noncompliance with such technology-based emission limitations if the conditions of paragraph (G)(3) of this rule are met.

(3) The affirmative defense of emergency shall be demonstrated through properly signed, contemporaneous operating logs, or other relevant evidence showing that:

(a) An emergency occurred and the permittee can identify the cause(s) of the emergency;

(b) The permitted facility was being properly operated at the time;

(c) During the period of the emergency the permittee took all reasonable steps to minimize levels of emissions that exceeded the emission standards or other requirements in the permit; and

(d) The permittee submitted notice of the emergency to the director within two working days of the time when emission limitations were exceeded due to the emergency. Such notice must contain a description of the emergency, any steps taken to mitigate emissions, and corrective actions taken. This notice fulfills the requirements of paragraph (A)(3)(c)(iii) of this rule.

(4) In any enforcement proceeding, the permittee seeking to establish the occurrence of an emergency has the burden of proof with regard to the occurrence of the emergency.

(5) The emergency defense provision in paragraph (G) of this rule is in addition to any emergency or upset provision contained in any applicable requirement.

(H) Operational flexibility: changes allowed without requiring permit revisions.

(1) Changes allowed with seven day advance notice. An owner or operator of a stationary source with a Title V permit is authorized, and each permit issued under this rule shall expressly provide such authorization, to make a change, as provided in paragraphs (H)(1)(a) to (H)(1)(c) of this rule, within the permitted stationary source without obtaining a permit revision, if such change is not a modification under any provision of Title I of the act and does not result in an exceedance of the emissions allowable under the permit (whether expressed therein as a rate of emissions or in terms of total emissions), and the owner or operator of the source provides the administrator and the director with written notification as provided in paragraph (H)(2) of this rule.

(a) Changes that contravene express permit term. Changes that contravene an express permit term, except for changes that would violate applicable requirements or contravene federally enforceable permit terms and conditions that are monitoring (including test methods), recordkeeping, reporting, or compliance certification requirements.

(b) Emission trades under applicable implementation plan. Title V permitted sources may trade increases and decreases in emissions in the permitted stationary source, where the applicable implementation plan provides for such emissions trades without requiring a permit revision. This provision is available in those cases where the permit does not already provide for such emissions trading. Compliance with the permit requirements that the source will meet using the emissions trade shall be determined according to requirements of the applicable implementation plan authorizing emissions trades.

(c) Emissions trades to comply with federally enforceable cap.

(i) Upon the applicant's request in a Title V permit application, the director shall issue a permit that contains terms and conditions, including all terms required under this rule to determine compliance, allowing for the trading of emissions increases and decreases in the permitted facility solely for the purpose of complying with a federally enforceable emissions cap that is established in the permit independent of otherwise applicable requirements.

(ii) The permit applicant shall include in its application proposed replicable procedures and permit terms that ensure that the emissions trades are quantifiable and enforceable. The director shall not be required to include in the emissions trading provisions any emissions units for

which emissions are not quantifiable or for which there are no replicable procedures to enforce the emissions trades.

(iii) The permit shall require compliance with all applicable requirements.

(2) Notification.

(a) Written notification to the administrator and director required under paragraph (H)(1) of this rule shall be provided a minimum of seven days in advance of the proposed changes, unless the change is associated with, or in response to, emergency conditions.

(b) If less than seven days notice is provided because of a need to respond more quickly to such emergency conditions, the permittee shall provide notice to the administrator and the director as soon as possible after learning of the need to make the change.

(c) The permittee and the director shall thereafter attach each such notice to their copy of the relevant permit.

(d) The written notification required in paragraph (H)(1)(a) of this rule shall include:

(i) For sources making changes under paragraph (H)(1)(a) of this rule:

(a) A brief description of the change within the permitted facility,

(b) The date on which the change will occur,

(c) Any change in emissions, and

(d) Any permit term or condition that is no longer applicable as a result of the change;

(ii) For sources implementing emission trades as provided in paragraph (H)(1)(b) of this rule:

(a) When the proposed change will occur,

(b) A brief description of each change,

(c) Any change in emissions,

(d) The pollutants emitted subject to the emission trade,

(e) The provisions in the applicable implementation plan that provide for the emissions trade with which the source will comply and any other information as may be required by the provisions in the applicable implementation plan authorizing the trade, and

(f) The permit requirements with which the source will comply; or

(iii) For sources implementing emission trades as provided in paragraph (H)(1)(c) of this rule:

(a) When the change will occur,

(b) Description of the changes in emissions that will result, and

(c) How these increases and decreases in emission will comply with the terms and conditions of the permit.

(3) Permit shield. The permit shield provided under paragraph (F) of this rule shall not apply to changes made under this paragraph, except those provided for in paragraph (H)(1)(c) of this rule; however, the protection of the permit shield shall continue to apply to operations and emissions that are not affected by the change, provided that the permittee complies with the terms and conditions of the permit applicable to such operations and emissions. The permit shield may be reinstated for emissions and operations affected by the change:

(a) If subsequent changes cause the facility's operations and emissions to revert to those anticipated in the permit and the permittee resumes compliance with the terms and conditions of the permit; or

(b) If the permittee obtains a significant modification to the permit pursuant to this chapter to modify the change in the permit. Nothing in this paragraph shall be construed as requiring such a modification to be obtained.

(I) Off-permit changes. The owner or operator of a Title V source may make any change in its operations or emissions at the source that is not specifically addressed or prohibited in the Title V permit, without obtaining an amendment or modification of the permit, provided that the following conditions are met:

(1) The change does not result in conditions that violate any applicable requirements or that violate any existing federally enforceable permit term or condition;

(2) The permittee provides contemporaneous written notice of the change to the director and the administrator, except that no such notice shall be required for changes involving insignificant emission levels or activities as defined in rule 3745-77-01 of the Administrative Code, that are not subject to one or more applicable requirements. Such written notice shall describe each such change,

the date of such change, any change in emissions or pollutants emitted, and any federally applicable requirement that would apply as a result of the change;

(3) The change shall not qualify for the permit shield under paragraph (F) of this rule;

(4) The permittee shall keep a record describing all changes made at the source that result in emissions of a regulated air pollutant subject to an applicable requirement, but not otherwise regulated under the permit, and the emissions resulting from those changes; and

(5) The change is not subject to any applicable requirement under Title IV of the act or is not a modification under any provision of Title I of the Act.

Paragraph (I) of this rule applies only to modification or amendment of the permittee's Title V permit. The change made may require a permit-to-install under Chapter 3745-31 of the Administrative Code if the change constitutes a modification as defined in that chapter. Nothing in paragraph (I) of this rule shall affect any applicable obligation under Chapter 3745-31 of the Administrative Code.

Effective: 02/14/2010

R.C. 119.032 review dates: 11/23/2009 and 02/14/2015

CERTIFIED ELECTRONICALLY
Certification

02/03/2010
Date

Promulgated Under: 119.03
Statutory Authority: 3704.03(E), 3704.03(G), 3704.03(X), 3704.036
Rule Amplifies: 3704.036
Prior Effective Dates: 4/20/94, 9/16/03

3745-77-08 **Permit issuance, modifications, revisions, revocations, reopenings, and termination.**

[Comment: For dates of non-regulatory government publications, publications of recognized organizations and associations, federal rules, and federal statutory provisions referenced in this rule, see paragraph (SS) of rule 3745-77-01 of the Administrative Code titled "Referenced materials."]

(A) Action on application.

(1) A Title V permit, permit modification, or permit renewal may be issued only if all of the following conditions have been met:

(a) The director has received a complete application for a Title V permit, permit modification, or permit renewal, as determined in accordance with rule 3745-77-05 of the Administrative Code;

(b) Except for modifications qualifying for minor permit modification procedures under paragraphs (C)(1) and (C)(2) of this rule, the director has complied with the requirements for public participation under paragraph (G) of this rule and the procedural requirements of division (F)(1) of section 3704.036 of the Revised Code;

(c) The director has complied with the requirements for notifying and responding to affected states under paragraph (B) of rule 3745-77-09 of the Administrative Code;

(d) The director determines that the conditions of the permit provide for compliance with all applicable requirements, and the requirements of this chapter; and

(e) The administrator has received a copy of the proposed permit and any notices required under rule 3745-77-09 of the Administrative Code, and has not objected to issuance of the permit under paragraph (C) of rule 3745-77-09 of the Administrative Code within the time specified therein.

(2) Following review of a Title V application submitted in accordance with this chapter, the director shall issue a draft permit or denial, permit modification or denial, or permit renewal or denial for public comment, in accordance with paragraph (G) of this rule. The draft shall be accompanied by a statement that sets forth the legal and factual basis for the draft permit conditions (including references to the applicable statutory or regulatory provisions). The director shall send this statement of basis to the administrator, to the applicant, and to any other person who requests it.

(3) Following the completion of the public comment period on the draft permit, the director shall send the applicant a preliminary proposed permit that incorporates all changes the director proposes to make to the draft permit and the director's responses to comments received on the draft permit. Within fourteen days after receipt of a preliminary proposed permit, the applicant may request an informal conference with the director. In the event of such request from the applicant, the director shall hold a conference with the applicant on the preliminary proposed permit prior to the submission of a proposed permit to the administrator pursuant to paragraph (A)(4) of this rule.

(4) Following completion of the public comment period and review of the preliminary proposed permit as provided in paragraphs (A)(2) and (A)(3) of this rule, the director shall prepare and submit to the administrator a proposed Title V permit, permit modification, or permit renewal. Any denial of an application for a Title V permit, permit modification, or permit renewal shall be made in compliance with division (F)(1) of section 3704.036 of the Revised Code.

(a) The proposed Title V permit or proposed denial, modification, or renewal shall be submitted to the administrator no later than forty-five days preceding the deadline for final action under paragraph (A)(6) of this rule and shall contain all applicable requirements that have been promulgated and made applicable to the source as of the date of issuance of the draft permit.

(b) If new applicable requirements are promulgated or otherwise become newly applicable to the source following submission of the proposed permit to the administrator but before issuance of the final permit, the director shall extend or reopen the public comment period to solicit comment on additional permit provisions to implement the new applicable requirements.

(5) The following actions shall occur after review by the administrator:

(a) Upon receipt of notice that the administrator will not object to a proposed Title V permit, permit modification, or permit renewal that has been submitted for the administrator's review pursuant to this rule, the director shall issue the Title V permit, permit modification, or permit renewal forthwith and in any event no later than the tenth day following receipt of the notice from the administrator.

(b) Upon the passage of forty-five days after submission of a Title V permit, permit modification, or permit renewal for the administrator's review, and if the administrator has not notified the director of an objection to the proposed permit, the director shall issue the permit, permit modification, or permit renewal forthwith and in no event later than the fifty-fifth day following submission for review by the administrator.

(c) If the administrator objects to the proposed Title V permit, permit modification, or permit renewal, the director shall consult with the administrator and the applicant and shall submit a revised proposed Title V permit to the administrator within ninety days after the date of the administrator's objection, unless the director determines that one or more revisions sought by the administrator are inconsistent with applicable statutes or regulations. In that case, the director may so inform the administrator within ninety days following the date of the objection and decline to make those particular revisions. In no event shall the director issue a final Title V permit over the administrator's objection.

(6) Except as provided in this paragraph or in paragraph (C)(1)(e) or (C)(2)(d) of this rule, the director shall take final action on each initial or renewal application or application for a modification within eighteen months after receiving a complete application. For each such application that the director does not propose to deny, the director shall submit a proposed Title V permit, modification, or renewal to the administrator no later than forty-five days before the deadline for final action established in this paragraph.

(a) The director shall take final action on at least one third of all initial permit applications annually during the first two years and shall take action on the remainder of the initial applications in the third year following approval of the Title V permit program.

(b) The director shall take action on any permit, permit modification, or permit renewal application submitted in compliance with regulations promulgated under Titles IV or V of the act for the permitting of affected sources under the acid rain program within the time specified in those regulations.

(c) The director may suspend action on a pending Title V permit application if the applicant has made appropriate application to the director pursuant to Chapter 3745-31 or 3745-35 of the Administrative Code to establish federally enforceable limits that would exempt the source in question from the requirement to obtain a Title V permit under rule 3745-77-02 of the Administrative Code until after the director has taken final action on the application under Chapter 3745-31 or 3745-35 of the Administrative Code.

(d) The director shall take action on any complete permit application containing any early reduction demonstration under Section 112(i)(5) of the act within nine months of receipt of the complete application.

(e) Pursuant to division (F) of section 3704.036 of the Revised Code, the director's failure to take final action on a Title V permit renewal or modification application within the times prescribed by this chapter, may be appealed to the environmental review appeals commission under section 3745.04 of the Revised Code.

(B) Administrative permit amendments.

(1) An administrative permit amendment may be made by the director consistent with the following:

(a) The director shall take no more than sixty days from receipt of a request for an administrative permit amendment to take final action on such request, and may incorporate such changes without providing notice to the public or affected states, provided that it designates any such permit revisions as administrative permit amendments made pursuant to this paragraph.

(b) The director shall submit a copy of the revised permit to the administrator.

(c) The source may implement the changes addressed in the request for an administrative amendment immediately upon submittal of the request.

(2) Permit shield. Administrative permit amendments defined in paragraph (C)(5) of rule 3745-77-01 of the Administrative Code shall be covered by the permit shield in paragraph (F) of rule 3745-77-07 of the Administrative Code upon the director's final action granting a request for such administrative permit amendment.

(3) Administrative permit amendments for purposes of the acid rain portion of the permit shall be governed by regulations promulgated under Title IV of the act.

(C) Permit modification.

A permit modification is any revision to a Title V permit that cannot be accomplished under the administrative permit amendment provisions under paragraph (B) of this rule. A permit modification for purposes of the acid rain portion of the permit shall be governed by regulations promulgated under Title IV of the act.

(1) Minor permit modification procedures.

(a) Criteria. Minor permit modification procedures may be used only for those permit modifications that:

(i) Do not violate any applicable requirement;

(ii) Do not involve significant changes to existing monitoring, reporting, or recordkeeping requirements in the permit;

[Comment: Because of the size limitations on insignificant emissions units, the consequences of a change in monitoring at an insignificant

emissions unit would be quite small. Such a change is not significant and, therefore, is eligible for minor modification procedures. In addition, a relaxation in a recordkeeping and reporting requirement for a best available technology emission limitation or operational restriction for an insignificant emissions unit does not require the use of the significant modification process. Such a relaxation to the recordkeeping or reporting requirements would have small consequences, and such a change could be made using the permit modification procedures stated in this paragraph.]

(iii) Do not require or change a case-by-case determination of an emission limitation or other standard, or a source-specific determination for temporary sources of ambient impacts, or a visibility or increment analysis;

[Comment: Case-by-case determinations of best available technology emission limitations, operational restrictions, or other standards for insignificant emissions units are created by the permit to install and then are incorporated into the Title V permit. The Title V permit does not create or change the best available technology emission limitation, operational restriction or other standard; the best available technology emission limitation, operational restriction or other standard may be created and changed only by the permit to install. Therefore, the Title V permit does not "require or change" such an emission limit, operational restriction or other standard. Accordingly, in such case the minor modification procedures may be used.]

(iv) Do not seek to establish or change a permit term or condition for which there is no corresponding underlying applicable requirement and that the source assumed to avoid an applicable requirement to which the source would otherwise be subject. Such terms and conditions include:

(a) A federally enforceable emissions cap assumed to avoid classification as a modification under any provision of Title I of the act; or

(b) An alternative emissions limit approved pursuant to regulations promulgated under Section 112(i)(5) of the act;

(v) Are not modifications under any provision of Title I of the act; and

(vi) Are not required under paragraph (C)(3) of this rule to be processed as a significant modification.

(b) Notwithstanding paragraphs (C)(1)(a) and (C)(2)(a) of this rule, minor permit modification procedures may be used for permit modifications

involving the use of economic incentives, marketable permits, emissions trading, and other similar approaches, to the extent that such minor permit modification procedures are explicitly provided for in the applicable implementation plan or in applicable requirements promulgated by the administrator.

(c) Application. An application requesting the use of minor permit modification procedures shall meet the requirements of rule 3745-77-03 of the Administrative Code and shall include the following:

(i) A description of the change, the emissions resulting from the change, and any new applicable requirements that will apply if the change occurs;

(ii) The source's suggested draft permit;

(iii) Certification by a responsible official, consistent with paragraph (D) of rule 3745-77-03 of the Administrative Code that the proposed modification meets the criteria for use of minor permit modification procedures and a request that such procedures be used; and

(iv) Completed applications in a form and manner prescribed by the director to use to notify the administrator and affected states as required under rule 3745-77-09 of the Administrative Code.

(d) Administrator and affected state notification. Within five working days of receipt of a complete permit modification application, the director shall meet the obligation of paragraphs (A)(1) and (B)(1) of rule 3745-77-09 of the Administrative Code to notify the administrator and affected states of the requested permit modification. The director promptly shall send any notice required under paragraph (B)(2) of rule 3745-77-09 of the Administrative Code to the administrator.

(e) Timetable for issuance. Within ninety days of the director's receipt of an application under minor permit modification procedures, or fifteen days after the end of the administrator's forty-five day review period under paragraph (C) of rule 3745-77-09 of the Administrative Code, whichever is later, the director shall:

(i) Issue the permit modification as proposed;

(ii) Propose to deny the permit modification application that will be effective in thirty days unless an adjudication hearing is requested;

(iii) Determine that the requested modification does not meet the minor permit modification criteria and should be reviewed under the

significant modification procedures under paragraph (C)(3) of this rule; or

(iv) Revise the draft permit modification and transmit to the administrator the new proposed permit modification as required by paragraph (A) of rule 3745-77-09 of the Administrative Code.

(f) Ability to make changes. The applicant may make the change proposed in its minor permit modification application immediately after it files such application. After the applicant makes the change allowed by the preceding sentence, and until the director takes any of the actions specified in paragraph (C)(1)(e) of this rule, the owner or operator of the source must comply with both the applicable requirements governing the change and the proposed permit terms and conditions. During this time period, the owner or operator of the source need not comply with the existing permit terms and conditions the applicant seeks to modify. However, if the owner or operator of the source fails to comply with the proposed permit terms and conditions during this time period, the existing permit terms and conditions the applicant seeks to modify may be enforced against the source.

(g) Permit shield. The permit shield under paragraph (F) of rule 3745-77-07 of the Administrative Code shall not extend to minor permit modifications.

(2) Group processing of minor permit modifications.

Consistent with this paragraph, the director may modify the procedure outlined in paragraph (C)(1) of this rule to process groups of an applicant's applications for certain modifications eligible for minor permit modification processing including modifications for insignificant emissions units subject to one or more applicable requirements.

(a) Criteria. Group processing of modifications may be used only for those permit modifications that:

(i) Meet the criteria for minor permit modification procedures under paragraph (C)(1)(a) of this rule; and

(ii) Collectively are below ten per cent of the emissions allowed by the permit for the emissions unit for which the change is requested, below twenty per cent of the applicable definition of major source in rule 3745-77-01 of the Administrative Code, or below five TPY, whichever is least.

(b) Application. An applicant requesting the use of group processing procedures shall meet the requirements of rule 3745-77-03 of the Administrative Code and shall include the following in the application:

(i) A description of the change, the emissions resulting from the change, and any new applicable requirements that will apply if the change occurs;

(ii) The source's suggested draft permit;

(iii) Certification by a responsible official, consistent with paragraph (D) of rule 3745-77-03 of the Administrative Code, that the proposed modification meets the criteria for use of group processing procedures and a request that such procedures be used;

(iv) A list of the applicant's other pending applications for group processing, and a determination of whether the requested modification, aggregated with these other applications, equals or exceeds the threshold set under paragraph (C)(2)(a)(ii) of this rule;

(v) Certification, consistent with paragraph (D) of rule 3745-77-03 of the Administrative Code that the applicant has notified the administrator of the proposed modification. Such notification need contain only a brief description of the requested modification; and

(vi) Completed applications, in the form and manner prescribed by the director to notify the administrator and affected states as required under rule 3745-77-09 of the Administrative Code.

(c) Administrator and affected state notification. On a quarterly basis or within five business days of receipt of an application demonstrating that the aggregate of a source's pending applications equals or exceeds the threshold level set under paragraph (C)(2)(a)(ii) of this rule, whichever is earlier, the director promptly shall meet the obligation under paragraphs (A)(1) and (B)(1) of rule 3745-77-09 of the Administrative Code to notify the administrator and affected states of the requested permit modifications. The director shall send any notice required under paragraph (B)(2) of rule 3745-77-09 of the Administrative Code to the administrator.

(d) Timetable for issuance. The provisions of paragraph (C)(1)(e) of this rule shall apply to modifications eligible for group processing, except that the director shall take one of the actions specified in paragraphs (C)(1)(e)(i) to (C)(1)(e)(iv) of this rule within one hundred eighty days of receipt of the application or fifteen days after the end of the administrator's forty-five day review period under paragraph (C) of rule 3745-77-09 of the Administrative Code, whichever is later.

(e) Ability to make changes. The director may allow the owner or operator of the source to make the changes proposed for group processing in the minor

permit modification application immediately after the applicant files such the source makes the changes allowed by the preceding sentence, and until the director takes any of the actions specified in paragraphs (C)(1)(e)(i) to (C)(1)(e)(iv) of this rule, the owner or operator of the source must comply with both the applicable requirements governing the changes and the proposed permit terms and conditions. During this time period, the owner or operator of the source need not comply with the existing permit terms and conditions it seeks to modify. However, if the owner or operator of the source fails to comply with the proposed permit terms and conditions during this time period, the existing permit terms and conditions the applicant seeks to modify may be enforced against the owner or operator of the source.

(f) Permit shield. The permit shield under paragraph (F) or rule 3745-77-07 of the Administrative Code shall not extend to group processing of minor permit modifications.

(3) Significant modification procedures.

(a) Criteria. Significant modification procedures shall be used for applicants requesting permit modifications that do not qualify as minor permit modifications or as administrative amendments, including:

(i) Significant change in existing monitoring permit terms or conditions; or

(ii) A relaxation of reporting or recordkeeping permit terms or conditions, except for those relating to best available technology emission limitations, operational restrictions or other standards for insignificant emission units, which are subject to the minor modification procedures and comments set forth at paragraph (C)(1) of this rule.

(b) No permit condition that is rendered inapplicable as a result of a modification shall be construed to prohibit the modification.

(c) Significant permit modifications shall meet all requirements of this chapter, including those for applications, public participation, review by affected states, and review by the administrator, as they apply to permit issuance and permit renewal. The director shall complete review on a majority of significant permit modifications within nine months after receipt of a complete application.

(d) A complete application for a significant permit modification shall be filed within twelve months after commencing operation of the modified source, provided that where an existing Title V permit would prohibit construction or operation of such modified source, a Title V permit revision must be obtained before operation of such modified source. This paragraph shall not

affect the applicability of Chapter 3745-31 of the Administrative Code to any source that is required to have a permit to install under that chapter.

(D) Reopening for cause.

(1) Causes for reopening prior to permit expiration. Each issued permit shall include provisions specifying the conditions under which the permit will be reopened prior to the expiration of the permit. A permit shall be reopened and revised under any of the following circumstances:

(a) Additional applicable requirements under the Act become applicable to a major Title V source with a remaining permit term of three or more years. Such a reopening shall be completed not later than eighteen months after promulgation of the applicable requirement. No such reopening is required if the effective date of the requirement is later than the date on which the permit is due to expire, unless the original permit or any of its terms and conditions has been extended pursuant to paragraph (E)(1) of this rule.

(b) Additional requirements (including excess emissions requirements) become applicable to an affected source under the acid rain program. Upon approval by the administrator, excess emissions offset plans shall be deemed to be incorporated into the permit.

(c) The director or the administrator determines that the permit contains a material mistake or that inaccurate statements were made in establishing the emissions standards or other terms or conditions of the permit.

(d) The administrator or the director determines that the permit must be revised or revoked to assure compliance with the applicable requirements.

(2) Reopening procedure.

Procedures to reopen and issue a permit shall follow the same procedures as apply to initial permit issuance under paragraph (A) of this rule and, except as provided in paragraph (B)(3) of this rule, shall affect only those parts of the permit for which cause to reopen exists. Such reopening shall be made as expeditiously as practicable.

(3) Advance notice to permittee.

Reopenings under paragraph (D)(1) of this rule shall not be initiated before a notice of such intent is provided to the owner or operator of the Title V source by the director at least thirty days in advance of the date that the permit is to be reopened, except that the director may provide a shorter time period in the case of an emergency.

(4) Action by the administrator.

Within ninety days, or longer if the administrator extends this period, after receipt of notification by the administrator that the administrator has found cause to exist to revoke, modify, or revoke and reissue a permit pursuant to paragraph (D)(1) of this rule, the director shall forward to the administrator a proposed determination of revocation, modification, or revocation and reissuance, as appropriate. Within ninety days receipt of the administrator's objection to a proposed determination, the director shall address and act upon the administrator's objection unless the director determines that one or more revisions sought by the administrator are inconsistent with applicable statutes or regulations.

(E) Renewal applications and processing.

(1) If the director fails to take a final action on the application to renew a Title V permit prior to expiration of the Title V permit and the owner or operator of the source filed the application in accordance with paragraph (E) of rule 3745-77-04 of the Administrative Code and such application was deemed complete in accordance with paragraph (A) of rule 3745-77-05 of the Administrative Code. All provisions and authorizations of the expired permit shall remain in effect until the director's final action on the pending renewal application. If a Title V operating permit expires after a timely and complete renewal application has been filed in accordance with paragraph (E) of rule 3745-77-04 of the Administrative Code with the director, all authorizations and provisions under the permit shield of the expired permit shall remain in effect until the director's final action on the pending renewal application.

(2) If a permit has been reopened for cause within two years of the expiration of the permit, the owner or operator of the source may elect to use the reopening procedure to renew the entire permit.

(F) Revocation.

(1) The director may revoke a Title V permit if the director determines that any of the federally enforceable conditions, terms, or standards of paragraph (A)(7)(a) of rule 3745-77-07 of the Administrative Code or any other applicable requirement have been or will be violated. Where the director determines that such violations occurred only at individual emission units covered by the Title V permit, the director may revoke the Title V permit and reissue it for only those emission units that are not in violation.

(2) The director shall afford a prompt hearing to any permit holder whose Title V permit is revoked in the manner prescribed in Chapter 3745-47 of the Administrative Code.

(3) Revocation and reissuance of a Title V permit shall be final thirty days after service of notice to the permit holder.

(4) A Title V permit that has been revoked shall be surrendered forthwith to the director.

(G) Public participation.

Except for modifications qualifying for minor permit modification procedures, all permit proceedings, including initial permit issuance, significant modifications, and renewals, shall follow the procedures in this paragraph for public comment and hearing:

(1) Notice shall be given: by publication in a newspaper of general circulation in the area where the source is located and in the "Ohio EPA Weekly Review"; to persons on a mailing list developed by the director, including those who request in writing to be on the list; and by other means if necessary to assure adequate notice to the affected public;

(2) The notice shall identify the affected facility; the name and address of the permittee; the name and address of the director; the activity or activities involved in the permit action; the emissions change involved in any permit modification; the name, address, and telephone number of a person from whom interested persons may obtain additional information, including copies of the permit draft, the application, all relevant supporting materials, including any permit application, compliance plan, permit, and monitoring and compliance certification report pursuant to Section 503(e) of the act, except for information entitled to confidential treatment pursuant to Section 114(c) of the act, and all other materials available to the director that are relevant to the permit decision; a brief description of the comment procedures required by this chapter; and the time and place of any hearing that may be held, including a statement of procedures to request a hearing (unless a hearing has already been scheduled);

(3) The director shall provide such notice and opportunity for participation by affected states as is provided for by rule 3745-77-09 of the Administrative Code;

(4) The director shall provide at least thirty days for public comment and shall give notice of any public hearing at least thirty days in advance of the hearing;

(5) The director shall keep a record of the commenters and also of the issues raised during the public participation process and such records shall be available to the public.

(H) Termination.

(1) Other than upon Title V permit expiration, a Title V permit, or terms and conditions within a Title V permit that apply to a specific emissions unit or activity level, terminate when:

(a) The responsible official of a permittee submits to the Ohio environmental protection agency and the Ohio environmental protection agency receives a document certifying permanent shutdown of the Title V facility or, as applicable, the specific emissions unit within the facility;

(b) A change is made at the Title V facility such that the facility is no longer a Title V source pursuant to paragraph (B) of rule 3745-77-02 of the Administrative Code, and the owner or operator submits to the director a complete application for a permit-to-install and operate (PTIO) that demonstrates the facility is no longer a Title V source under paragraph (B) of rule 3745-77-02 of the Administrative Code or is exempt pursuant to paragraph (C) of rule 3745-77-02 of the Administrative Code from the requirements to obtain a Title V permit, and the director has issued a PTIO pursuant to Chapter 3745-31 of the Administrative Code for all air contaminant sources at the facility for which a PTIO is required if the sources are not covered by a Title V permit; or

(c) The owner or operator submits to the director a complete application for a PTIO requesting federally-enforceable restrictions (i.e. application for a federally enforceable PTIO (FEPTIO)) that demonstrates upon issuance of an FEPTIO the facility will no longer be Title V source under paragraph (B) of rule 3745-77-02 of the Administrative Code because it will be exempt pursuant to paragraph (C)(4) of rule 3745-77-02 of the Administrative Code from the requirements to obtain a Title V permit, and the director has issued the FEPTIO and, as needed, a PTIO, for all air contaminant sources at the facility for which a FEPTIO and, if applicable, a PTIO is required if the sources are not covered by a Title V permit.

(2) Provided a complete application for a PTIO or FEPTIO is filed under paragraph (H)(1)(b) or (H)(1)(c) of this rule six months prior to expiration of the Title V permit, if the director fails to take final action on the application, the owner or operator is permitted by this rule to continue to operate the facility in accordance with all terms and conditions and authorizations of the expired Title V permit until the director takes final action on the application.

(3) An owner or operator shall submit to the Ohio environmental protection agency by no later than the date required by the terminated Title V permit or by the terms and conditions of the expired Title V permit applied to the source under paragraph (H)(2) of this rule, any quarterly deviation reports, semiannual deviation reports, annual compliance certifications, or similar report or certification, for the last period during which the Title V permit applied to the

source, or during which the terms and conditions of the expired Title V permit applied to the source under paragraph (H)(2) of this rule.

Effective: 02/14/2010

R.C. 119.032 review dates: 11/23/2009 and 02/14/2015

CERTIFIED ELECTRONICALLY
Certification

02/03/2010
Date

Promulgated Under: 119.03
Statutory Authority: 3704.03(E), 3704.03(G), 3704.03(X), 3704.036
Rule Amplifies: 3704.036
Prior Effective Dates: 4/20/94, 9/16/03

3745-77-09 **Permit review by the administrator and affected states.**

[Comment: For dates of non-regulatory government publications, publications of recognized organizations and associations, federal rules, and federal statutory provisions referenced in this rule, see paragraph (SS) of rule 3745-77-01 of the Administrative Code titled "Referenced materials."]

(A) Transmission of information to the administrator.

(1) Unless the administrator waives this requirement as provided in 40 CFR 70.8(a)(2), the director shall provide to the administrator a copy of each Title V permit application (including any application for Title V permit modification), each proposed Title V permit, and each final Title V permit. The director may require the applicant to provide a copy of the permit application (including the compliance plan) directly to the administrator. Upon agreement with the administrator, the director may submit to the administrator a Title V permit application summary form and any relevant portion of the Title V permit application and compliance plan, in place of the complete permit application and compliance plan.

(2) The director shall keep for five years such records and submit to the administrator such information as the administrator may reasonably require to ascertain whether the state program complies with the requirements of the Act and 40 CFR Part 70.

(B) Review by affected states.

(1) The director shall give notice of each draft Title V permit to any affected state on or before the time that the director provides this notice to the public under paragraph (G) of rule 3745-77-08 of the Administrative Code except to the extent paragraphs (C)(1)(d) and (C)(2)(c) of rule 3745-77-08 of the Administrative Code require the timing of the notice to be different.

(2) As part of the director's submittal of a proposed Title V permit to the administrator (or as soon as possible after the submittal for minor permit modification procedures under paragraphs (C)(1) or (C)(2) of rule 3745-77-08 of the Administrative Code, the director shall notify the administrator and any affected state in writing of any refusal by the director to accept all recommendations for the proposed Title V permit that the affected state submitted during the public or affected state review period. The notice shall include the director's reasons for not accepting any such recommendation. The director is not required to accept recommendations that are not based on federally applicable requirements or the requirements of this chapter.

(C) Objection by the administrator.

(1) No Title V permit for which an application must be transmitted to the administrator under paragraph (A) of this rule shall be issued if the administrator objects to its issuance in writing within forty-five days of receipt of the proposed permit and all necessary supporting information.

(2) The director shall, within ninety days after the date of receipt of an objection under paragraph (C)(1) of this rule, revise and submit a proposed Title V permit in response to the objection unless the director determines that no change in the proposed permit is necessary or appropriate to comply with applicable requirements or requirements of this chapter. In no event shall the director issue a Title V permit over the objection of the administrator.

Effective: 02/14/2010

R.C. 119.032 review dates: 11/23/2009 and 02/14/2015

CERTIFIED ELECTRONICALLY
Certification

02/03/2010
Date

Promulgated Under: 119.03
Statutory Authority: 3704.03(E), 3704.03(G), 3704.03(X), 3704.036
Rule Amplifies: 3704.036
Prior Effective Dates: 4/20/94

3745-77-10 **State law applicability.**

[Comment: For dates of non-regulatory government publications, publications of recognized organizations and associations, federal rules, and federal statutory provisions referenced in this rule, see paragraph (SS) of rule 3745-77-01 of the Administrative Code titled "Referenced materials."]

(A) General authority for state only permit terms and conditions.

The director shall have authority to include in Title V permits any terms and conditions that are authorized by Ohio law, including terms and conditions that are consistent with the requirements of Chapters 3745-31 of the Administrative Code that would be applicable in the absence of the Title V permit program. Such terms and conditions shall be "state only" requirements. The director shall prescribe the manner and form for the inclusion of such information in Title V permit applications submitted pursuant to this chapter as is necessary to implement state only requirements applicable to one or more emissions units at a Title V source.

(B) Separation of state only and federally enforceable permit terms and conditions.

Terms and conditions of a Title V permit that are imposed pursuant to state law only shall be identified in the permit as not federally enforceable and shall be differentiated from federally enforceable permit terms and conditions that are required under the act or any applicable requirements. Notwithstanding the separation of state only and federally enforceable terms and conditions in a Title V permit, all federally enforceable terms and conditions in a Title V permit shall be enforceable by the director as well as by the administrator.

(C) Revision of state only permit terms and conditions.

The director may modify or eliminate any state only terms and conditions of a Title V permit in accordance with the same procedures applicable to the modification or elimination of terms and conditions in a permit-to-install or permit-to-install and operate (PTIO) pursuant to Chapter 3745-31 of the Administrative Code, provided that such modification or elimination does not result in a Title I modification and does not cause the source to become subject to an applicable requirement or violate any federally enforceable term or condition in the Title V permit. Nothing in this paragraph shall affect the applicability of the notification and recordkeeping requirements of paragraph (I) of rule 3745-77-07 of the Administrative Code.

(D) Violation of state only permit terms and conditions.

No person shall violate any state only term or condition of a Title V permit. Any violation of any state only term or condition of a Title V permit shall be a violation of division (J)(2) of section 3704.05 of the Revised Code. The director may suspend or revoke the state only authority to operate one or more emissions units subject to a Title V permit consistent with paragraph (B) of rule 3745-31-07 of the

Administrative Code. No person shall operate an emissions unit after the effective date of a final suspension or revocation of the applicable state only portion of a Title V permit.

Effective: 02/14/2010

R.C. 119.032 review dates: 11/23/2009 and 02/14/2015

CERTIFIED ELECTRONICALLY
Certification

02/03/2010
Date

Promulgated Under: 119.03
Statutory Authority: 3704.03(E), 3704.03(G), 3704.03(X), 3704.036
Rule Amplifies: 3704.036
Prior Effective Dates: 4/20/94

3745-77-11 **Title V permits for major sources emitting greenhouse gases.**

[Comment: For dates of non-regulatory government publications, publications of recognized organizations and associations, federal rules, and federal statutory provisions referenced in this rule, see the "Referenced materials" section at the end of this rule.]

[Comment: "Greenhouse gases" subject to regulation as defined in 40 CFR Part 51.166 consist of the aggregate group of six greenhouse gases: Carbon dioxide, nitrous oxide, methane, hydrofluorocarbons, perfluorocarbons, and sulfur hexafluoride.]

(A) Notwithstanding any provisions to the contrary in this chapter, on or after January 2, 2011 Title V permits for major sources emitting greenhouse gases shall be required as provided in this rule and in 40 CFR Section 70.2, as amended (76 FR 43490, July 20, 2011). For the purpose of this rule, "CO_2 equivalent emissions" and "greenhouse gases" shall have the same meaning as set forth in 40 CFR 70.2 as amended (76 FR 43490, July 20, 2011).

(B) No initial Title V permit application shall be required for any major source that, except for its CO_2 equivalent emissions of greenhouse gases, is not a Title V source under paragraph (B) of rule 3745-77-02 of the Administrative Code if, by January 2, 2011 or twelve months after emitting more than one hundred thousand tons of CO_2 equivalent of greenhouse gases per year, whichever is later, the owner or operator of such source submits a complete application for a FEPTIO pursuant to Chapter 3745-31 of the Administrative Code for the purpose of limiting the potential to emit of CO_2 equivalent of greenhouse gases from such source to less than one hundred thousand tons per year, until twelve months after the application is withdrawn or the director takes final action on the application that does not limit the potential CO_2 equivalent emissions of greenhouse gases from such source to less than one hundred thousand tons per year.

(C) No initial Title V permit application shall be required for any major source that, except for its CO_2 equivalent emissions of greenhouse gases and mass emissions of greenhouse gases as of July 1, 2011, is not a Title V source under paragraph (B) of rule 3745-77-02 of the Administrative Code if, within twelve months after July 1, 2011 or twelve months after commencing operation on or after July 1, 2011 of a source authorized to emit more than one hundred thousand tons of CO_2 equivalent of greenhouse gases per year and with a potential to emit of greenhouse gas mass emissions more than one hundred tons per year, whichever is later, the owner or operator of such source submits a complete application for a FEPTIO pursuant to Chapter 3745-31 of the Administrative Code for the purpose of limiting the potential to emit of CO_2 equivalent of greenhouse gases from such source to less than one hundred thousand tons per year and limiting the potential to emit of mass greenhouse gases to less than one hundred tons per year, until twelve months after the application is withdrawn or the director takes final action on the application that does not limit the potential CO_2 equivalent emissions of greenhouse gases from such

source to less than one hundred thousand tons per year and potential mass greenhouse gases to less than one hundred tons per year.

(D) This rule and any terms or conditions of Title V permits regarding greenhouse gases shall cease to be effective if any of the following occurs:

(1) Enactment of federal legislation depriving the administrator of authority, limiting the administrator's authority, or requiring the administrator to delay the exercise of authority, to regulate greenhouse gases under the Clean Air Act; or

(2) The issuance of any opinion, ruling, judgment, order, or decree by a federal court depriving the administrator of authority, limiting the administrator's authority, or requiring the administrator to delay the exercise of authority, to regulate greenhouse gases under the Clean Air Act, including but not limited to any federal court decision staying, voiding, or invalidating the effectiveness of any of the actions of the administrator set forth in the greenhouse gas endangerment finding (74 FR 66496, December 15, 2009), the motor vehicle greenhouse gas tailpipe standards (75 FR 25324, May 7, 2010), the requirement to obtain prevention of significant deterioration permits and Title V permits as provided in the greenhouse gas tailoring rule (75 FR 31514, June 3, 2010), or the final federal rule "Action to Ensure Authority to Implement Title V Permitting Programs under the Greenhouse Gas Tailoring Rule" (75 FR 82254, December 30, 2010), or finding any such action, in whole or in part, to be arbitrary, capricious, or otherwise not in accordance with law; or

(3) Action by the president of the United States or the president's authorized agent, including the administrator, to repeal, withdraw, suspend, postpone, or stay the amendments to 40 CFR Section 51.166 promulgated on June 3, 2010, as set forth at 75 Fed. Reg. 31606, or to otherwise limit or delay the administrator's exercise of authority to require preconstruction permitting of sources of greenhouse gas emissions.

(E) To the extent that any action or determination listed in paragraphs (D)(1) to (D)(3) of this rule requires the permitting of any major source of greenhouse gas emissions at levels below the permitting thresholds set forth in paragraph (A) of this rule, the permitting thresholds in paragraph (A) of this rule shall remain in effect unless and until this rule is amended or rescinded.

(F) No Title V permit shall be required due to greenhouse gas emissions from any major source under this chapter, and greenhouse gases shall not be deemed to be subject to regulation or regulated air pollutants under this chapter, except as provided in this rule. Nothing in this rule is intended to be, and nothing in this rule shall be interpreted to be, an "emission limitation" or "emission standard" within the meaning of section 302(k) of the Clean Air Act, or a "control requirement" within the meaning of section 193 of the Clean Air Act.

(G) Referenced materials. This rule includes references to certain matter or materials. The text of the referenced materials is not included in this rule. Information on the

availability of the referenced materials as well as the date of, and/or the particular edition or version of the referenced material is included in this rule. For materials subject to change, only the specific versions specified in this rule are referenced. Material is referenced as it exists on the effective date of this rule. Except for subsequent annual publication of existing (unmodified) Code of Federal Regulation compilations, any amendment or revision to a referenced document is not applicable unless and until this rule has been amended to specify the new dates.

(1) Availability. The referenced materials are available as follows:

(a) Clean Air Act. Information and copies may be obtained by writing to: "Superintendent of Documents, Attn: New Orders, PO Box 371954, Pittsburgh, PA 15250-7954." The full text of the act as amended in 1990 is also available in electronic format at www.epa.gov/oar/caa/. A copy of the act is also available for inspection and copying at "The State Library of Ohio."

(b) Code of Federal Regulations. Information and copies may be obtained by writing to: "Superintendent of Documents, Attn: New Orders, PO Box 371954, Pittsburgh, PA 15250-7954." The full text of the CFR is also available in electronic format at www.access.gpo.gov/nara/cfr/. The CFR compilations are also available for inspection and copying at most public libraries and "The State Library of Ohio."

(c) Federal Register. Information and copies may be obtained by writing to: "Superintendent of Documents, Attn: New Orders, PO Box 371954, Pittsburgh, PA 15250-7954." Text of the Federal Register is also available in electronic format at www.gpoaccess.gov/fr/index.html. The Federal Register is also available for inspection and copying at most Ohio public libraries and "The State Library of Ohio."

(2) Referenced materials.

(a) 40 CFR 51.166; "Prevention of significant deterioration of air quality"; 75 FR 31606, June 3, 2010, as amended at 76 FR 43490, July 20, 2011.

(b) 40 CFR 70.2; "Definitions"; 57 FR 32295, July 21, 1992, as amended at 66 FR 59166, Nov. 27, 2001; 69 FR 31505, June 3, 2004; 72 FR 24078, May 1, 2007; 74 FR 51438, Oct. 6, 2009; 75 FR 31514, June 3, 2010; 76 FR 43490, July 20, 2011.

(c) Section 193 of the Clean Air Act; contained in 42 USC 7515; "General savings clause"; published January 5, 2009 in supplement II of the 2006 edition of the United States Code.

(d) Section 302 of the Clean Air Act; contained in 42 USC 7602; "Definitions"; published January 5, 2009 in supplement II of the 2006 edition of the United States Code.

(e) "Prevention of Significant Deterioration and Title V Greenhouse Gas Tailoring Rule; Final Rule"; 75 FR 31514, June 3, 2010; 76 FR 43490, July 20, 2011.

Effective: 03/22/2012

R.C. 119.032 review dates: 03/31/2016

CERTIFIED ELECTRONICALLY
Certification

03/12/2012
Date

Promulgated Under: 119.03
Statutory Authority: 3704.03(E), 3704.03(G), 3704.03(X), 3704.036
Rule Amplifies: 3704.036
Prior Effective Dates: 3/31/11

Chapter 3745-78: Air Pollution Control Fees

Contact: Mike Ahern 614-644-3631
Mike.Ahern@epa.ohio.gov

3745-78-01 **Definitions.**

(A) Except as otherwise provided in this rule, the definitions in rule 3745-77-01 of the Administrative Code shall apply to this chapter.

(B) The following definitions shall apply exclusively to this chapter:

(1) "Actual emissions" means the amount of regulated air pollutants emitted from a stationary source during a calendar year.

(2) "Actual construction of the source" means the initiation of physical on-site construction activities in connection with improvements to the source that are permanent in nature, including, without limitation, the installation of building supports and foundations and the laying of underground pipework.

(3) "Submit" or "submitted" means to present, or to have presented, to the Ohio environmental protection agency a document that is required under this chapter, and to have that document received by the Ohio environmental protection agency (or postmarked) by midnight on the due date specified in this chapter. Date of the receipt of the document is demonstrated by the postmark date, if sent by United States postal service; the electronic signature date, if submitted through the Ohio environmental protection agency's electronic reporting system; the transmittal date, if submitted through facsimile; or the date of the signature of the Ohio environmental protection agency employee receiving the document, if hand delivered in person to the Ohio environmental protection agency. The hard copy form with original signature must be provided to the Ohio environmental protection agency after a facsimile is submitted.

(4) "Synthetic minor facility" means a facility for which one or more permits to install or permits to operate have been issued for the air contaminant sources at the facility that include terms and conditions that lower the facility's potential to emit air contaminants below the major source thresholds established in rules adopted under section 3704.036 of the Revised Code.

Effective: 02/16/2008

R.C. 119.032 review dates: 12/02/2010

CERTIFIED ELECTRONICALLY
Certification

02/06/2008
Date

Promulgated Under: 119.03
Statutory Authority: 3704.036(B)
Rule Amplifies: 3745.11
Prior Effective Dates: 4/20/94, 5/10/00, 12/2/05

3745-78-02 **Fee emission reports.**

(A) By June 15, 1994 and April fifteenth of each year thereafter, except as provided by paragraph (G) of this rule, owners or operators of sources subject to the Title V permit program pursuant to rule 3745-77-02 of the Administrative Code, including facilities with a potential to emit any one regulated air pollutant of a quantity greater than or equal to one hundred tons per year, or any one hazardous air pollutant (HAP) greater than or equal to ten tons per year, or any combination of hazardous air pollutants greater than twenty-five tons per year, must submit, in a form and manner prescribed by the director, a fee emission report that quantifies the actual emission data for particulate matter, sulfur dioxide, organic compounds, nitrogen oxides, and lead (but shall not also be considered particulate matter). For purposes of this requirement, the potential to emit emission data shall be calculated annually on the basis of the facts as they existed on December thirty-first of the previous year. The owner or operator of a facility shall pay fees on the facility's actual emissions as specified in division (C) of section 3745.11 of the Revised Code.

(B) For any facility whose owner or operator does not file a fee emission report required in paragraph (A) of this rule, the director may require the owner or operator of that facility to submit annually potential to emit emission data to support the claim that it is not subject to the requirements of paragraph (A) of this rule based upon engineering calculations, emission factors, material balance calculations, or performance testing methods.

(C) By April 15, 1996, and by April fifteenth every two years thereafter, except as provided by paragraph (G) of this rule, owners or operators of facilities whose sum of actual annual emissions of particulate matter, sulfur dioxide, organic compounds, nitrogen oxide, and lead (but shall not also be considered particulate matter) from the emission units at the facility for which the owner or operator is required to apply for a permit or variance under Chapter 3745-35 of the Administrative Code, are greater than or equal to fifty tons per year and are not required to apply for a permit under the provisions of rule 3745-77-02 of the Administrative Code, must submit in a format and manner prescribed by the director a fee emission report that includes the following:

(1) For each regulated air pollutant, potential to emit emission data calculated annually on the basis of the facts as they existed on December thirty-first of the previous year.

(2) For particulate matter, sulfur dioxide, organic compounds, nitrogen oxide, and lead, actual emission data for each of the prior two calendar years. Owners or operators of facilities shall pay fees on actual emissions for each of the prior two calendar years as specified in division (D) of section 3745.11 of the Revised Code.

(D) By April 15, 1996, and by April fifteenth every two years thereafter, except as provided by paragraph (G) of this rule, owners or operators of facilities whose sum

of actual annual emissions from the facility of particulate matter, sulfur dioxide, organic compounds, nitrogen oxide, and lead (but shall not also be considered particulate matter) are less than fifty tons per year, shall attest to the fact that the owner or operator of the facility is not required to apply for a permit under the provisions of rule 3745-77-02 of the Administrative Code, and that the sum of the pollutants stated in this paragraph are less than fifty tons per year. This statement shall be made on the fee emission report for the prior two years as specified in division (D) of section 3745.11 of the Revised Code. Owners or operators of facilities subject to this paragraph shall be responsible for payment of these fees.

(E) For any owner or operator who claims to be subject to the provisions of paragraph (D) of rule 3745-78-02 of the Administrative Code, the director may require the owner or operator of that facility to submit annual actual emission or potential to emit data to support this claim based upon engineering calculations, emission factors, material balance calculations, or performance testing methods.

(F) If authorized to collect a fee under division (D) of section 3745.11 of the Revised Code, owners or operators of a synthetic minor facility must submit, by April 15, 2000 and each year thereafter, except as provided by paragraph (G) of this rule, in a form and manner prescribed by the director, a fee emission report that quantifies the actual emission data for particulate matter, sulfur dioxide, organic compounds, nitrogen oxides, and lead (but shall not also be considered particulate matter). For purposes of this requirement, the fee emission report shall be calculated annually. The owner or operator of a facility identified in this paragraph shall pay fees on the facility's actual emissions as specified in division (D) of section 3745.11 of the Revised Code.

(G) Fee emission reports due during calendar year 2008 and required under paragraph (A), (C) or (F) of this rule and the statement required under paragraph (D) of this rule, shall be submitted by June 6, 2008.

Effective: 02/16/2008

R.C. 119.032 review dates: 12/02/2010

CERTIFIED ELECTRONICALLY
Certification

02/06/2008
Date

Promulgated Under: 119.03
Statutory Authority: 3704.036(B)
Rule Amplifies: 3745.11
Prior Effective Dates: 4/20/94, 5/10/00, 11/29/02, 12/2/05

Chapter 3745-79: Small Business Technical Assistance

Contact: Rick Carleski 614-728-1742
Rick.Carleski@epa.ohio.gov

3745-79-01 **Definitions.**

[Comment: For dates of non-regulatory government publications, publications of recognized organizations and associations, federal rules, and federal statutory provisions referenced in this rule, see paragraph (D) of this rule titled "Referenced materials."]

(A) Except as otherwise provided in this rule, the definitions in rule 3745-15-01 of the Administrative Code shall apply to this chapter.

(B) "Small business stationary source" means any building, structure, facility, or installation that emits any federally regulated air pollutant and is owned or operated by a person who employs one hundred or fewer individuals; is a small business concern as defined in the Small Business Act; is not a major stationary source as defined in paragraph (j) of Section 302 of the Clean Air Act; does not emit fifty tons or more per year of any federally regulated air pollutant or any hazardous air pollutant, and emits less than seventy-five tons per year of all federally regulated air pollutants. For the purposes of this definition, the number of individuals employed will be based upon a full-time equivalent employee calculation. Total annual hours worked by all employees, including contract employees, divided by two thousand, will equal the number of individuals employed by the owner or operator of a source.

(C) "Small business technical and environmental compliance assistance program" means the program established pursuant to section 3704.18 of the Revised Code.

(D) Referenced materials. This chapter includes references to certain matter or materials. The text of the referenced materials is not included in the rules contained in this chapter. Information on the availability of the referenced materials as well as the date of, and/or the particular edition or version of the material is included in this rule. For materials subject to change, only the specific versions specified in this rule are referenced. Material is referenced as it exists on the effective date of this rule. Except for subsequent annual publication of existing (unmodified) Code of Federal Regulation compilations, any amendment or revision to a referenced document is not applicable unless and until this rule has been amended to specify the new dates.

(1) Availability. The referenced materials are available as follows:

(a) Clean Air Act. Information and copies may be obtained by writing to: "Superintendent of Documents, Attn: New Orders, PO Box 371954, Pittsburgh, PA 15250-7954." The full text of the Act as amended in 1990 is also available in electronic format at www.epa.gov/oar/caa/. A copy of the Act is also available for inspection and copying at most public libraries and "The State Library of Ohio."

(b) Code of Federal Regulations. Information and copies may be obtained by writing to: "Superintendent of Documents, Attention: New Orders, PO Box 371954, Pittsburgh, PA 15250-7954." The full text of the CFR is also

available in electronic format at www.gpoaccess.gov/cfr/index.html. The CFR compilations are also available for inspection and copying at most public libraries and "The State Library of Ohio."

(c) Ohio EPA weekly review. Information and copies may be obtained by writing to: Ohio EPA Legal Department, 122 S. Front Street, Columbus, Ohio, 43125. The full text of the Ohio EPA Weekly Review is also available in electronic format at www.epa.ohio.gov/legal/pubnots.aspx. The Ohio EPA Weekly Review compilations are also available for inspection and copying at most Ohio public libraries and "The State Library of Ohio."

(d) Small Business Act. Information and copies may be obtained by writing to : "Superintendent of Documents, Attn: New Orders, PO Box 371954, Pittsburgh, PA 15250-7954." The full text of the Act is also available in electronic format at www.sba.gov/content/small-business-act. A copy of the Act is also available for inspection and copying at most public libraries and "The State Library of Ohio."

(e) United States Code. Information and copies may be obtained by writing to: "Superintendent of Documents, Attn: New Orders, PO Box 371954, Pittsburgh, PA 15250-7954." The full text of the United States Code is also available in electronic format at www.gpoaccess.gov/uscode/. The USC compilations are also available for inspection and copying at most public libraries and "The State Library of Ohio."

(2) Referenced materials.

(a) Clean Air Act; contained in 42 USC 7401 to 7671q; "The Public Health and Welfare-Air Pollution Prevention and Control;" published February 1, 2010 in Supplement III of the 2006 edition of the United States Code.

(b) Section 302(j) of the Clean Air Act; contained in 42 USC 7642; "Definitions;" published February 1, 2010 in Supplement III of the 2006 edition of the United States Code.

(c) Small Business Act; contained in 15 USC 632; "Small-business concern;" published February 1, 2010 in Supplement III of the 2006 edition of the United States Code.

Effective: 02/16/2012

R.C. 119.032 review dates: 11/30/2011 and 11/30/2016

CERTIFIED ELECTRONICALLY
Certification

02/06/2012
Date

Promulgated Under: 119.03
Statutory Authority: 3704.036(B)
Rule Amplifies: 3704.036(A), 3704.036(B)
Prior Effective Dates: 4/20/92, 10/27/06

3745-79-02 **Registration.**

Any owner or operator whose building, structure, facility, or installation meets the definition of a small business stationary source may register with the Ohio environmental protection agency as a small business stationary source. Such registration will entitle the registrant to receive all notices issued pursuant to the small business technical and environmental compliance assistance program.

R.C. 119.032 review dates: 11/30/2011 and 11/30/2016

CERTIFIED ELECTRONICALLY
Certification

11/30/2011
Date

Promulgated Under: 119.03
Statutory Authority: 3704.036(B)
Rule Amplifies: 3704.036(A), 3704.036(B)
Prior Effective Dates: 04/20/94, 10/27/06

3745-79-03 **Notices relating to rights and obligations.**

[Comment: For dates of non-regulatory government publications, publications of recognized organizations and associations, federal rules, and federal statutory provisions referenced in this rule, see paragraph (D) of rule 3745-79-01 of the Administrative Code titled Referenced materials.]

(A) If public notice is not otherwise required under Chapter 3745-47 or 3745-49 of the Administrative Code, the director will give public notice of each proposed regulation or standard relevant to the small business technical and environmental compliance assistance program to be adopted or issued under the Clean Air Act and under Chapter 3704. of the Revised Code. Such notice shall be in the form and manner described in paragraph (B) of this rule.

(B) The public notices required pursuant to paragraph (A) of this rule shall be published at least once in the english language at least thirty days prior to the date of adoption of such regulation or standard, in the register of Ohio. The public notice shall also be published in the Ohio EPA Weekly Review and, in addition, shall be distributed to each individual registered under rule 3745-79-02 of the Administrative Code. The public notice shall consist of a synopsis of the proposed regulation or standard or, in the case of guidance issued, the topics covered, and, if a public hearing is required by law, the date, time, and place of public hearing on the proposed regulation or standard.

(C) The director shall take such additional steps as are reasonably calculated to inform owners and operators of small business stationary sources of proposed regulations and standards relevant to them. However, the giving of such additional notice by any means other than as specified in paragraph (B) of this rule shall not in any way invalidate any action that may be taken by the director with regard to any such regulation or standard.

(D) Copies of any proposed regulations and standards noticed pursuant to paragraph (B) of this rule shall be available from the date of the notice from the director for any person who wishes to obtain a copy. However, failure to furnish such copies to any person shall not invalidate any action that may be taken by the director with regard to the guidance on any such regulation or standard.

Effective: 02/16/2012

R.C. 119.032 review dates: 11/30/2011 and 11/30/2016

CERTIFIED ELECTRONICALLY
Certification

02/06/2012
Date

Promulgated Under: 119.03
Statutory Authority: 3704.036(B)
Rule Amplifies: 3704.036(A), 3704.036(B)
Prior Effective Dates: 4/20/94, 10/27/06

Chapter 3745-80: Statewide Motor Vehical Anti-Tempering Program

Contact: Mike Riggleman 614-644-3590
Mike.Riffleman@epa.ohio.gov

3745-80-01 **Definitions.**

"[Comment: For dates of non-regulatory government publications, publications of recognized organizations and associations, federal rules, and federal statutory provisions referenced in this rule, see paragraph (M) of this rule titled "Referenced materials."]

(A) "Anti-tampering inspector" means any authorized representative of the director with the authority to investigate, inspect and otherwise determine compliance with sections 3704.16 to 3704.162 of the Revised Code.

(B) "Anti-Tampering Procedures Manual" means the most recent, official document issued by the Ohio environmental protection agency to anti-tampering inspectors detailing the procedures to be followed when conducting inspections to determine compliance with sections 3704.16 to 3704.162 of the Revised Code.

(C) "Clean Air Act Amendments" means the Clean Air Act, and regulations adopted under it.

(D) "Director" means the director of the Ohio environmental protection agency or the director's authorized representative.

(E) "Emission control system" means any system designated by the United States environmental protection agency as an emission control system under title II of the Clean Air Act Amendments and includes any device or element of design of the system.

(F) "Emission system reference manual" means the most current reference manual with emission system application tables available from a source approved by the director or the director's designee.

(G) "Lessee" means any person who uses a motor vehicle pursuant to a bailment, lease or other contractual arrangement under which a charge is made for its use at a periodic rate for a term of thirty continuous days or more.

(H) "Motor vehicle facility" means premises owned, operated, rented, leased or otherwise used by any person engaged in the sale, lease, service or rental of motor vehicles or motor vehicle parts.

(I) "Person" means the state, any political subdivision, public or private corporation, partnership, firm, association, individual, organization or other entity.

(J) "Renter" means any person who uses a motor vehicle pursuant to a bailment, lease or other contractual arrangement under which a charge is made for its use at a periodic rate for a term of thirty continuous days or less.

(K) "Tamper with" means to remove permanently or temporarily, except for repair, replacement or converting for use of a clean alternative fuel, to bypass, defeat, or

render inoperative, in whole or in part, any emission control system that is installed on or in a motor vehicle, for purposes of defeating, bypassing or otherwise circumventing the requirements of the Clean Air Act Amendments and/or Chapter 3704. of the Revised Code and the rules promulgated thereunder.

(L) "Ultimate purchaser" with respect to any new motor vehicle, means the first person, other than a dealer in its capacity as a dealer, who is a good faith purchaser of such new motor vehicle for purposes other than resale.

(M) Referenced materials. This chapter includes references to certain subject matter or materials. The text of the referenced materials is not included in the rules contained in this chapter. Information on the availability of the referenced materials as well as the date of, and/or the particular edition or version of the material is included in this rule. For materials subject to change, only the specific version specified in this rule are referenced. Material is referenced as it exists on the effective date of this rule. Except for subsequent annual publication of existing (unmodified) Code of Federal Regulation compilations, any amendment or revision to a referenced document is not applicable unless and until this rule has been amended to specify the new dates.

(1) Availability. The referenced materials are available as follows:

(a) Code of Federal Regulations. Information and copies may be obtained by writing to: "Superintendent of Documents, Attn: Electronic products, PO Box 37082, Washington DC, 15250-7954." The full text of the CFR is also available in electronic format at www.access.gpo.gov/nara/cfr/. The CFR compilations are also available for inspection and copying at most public libraries and "The State Library of Ohio."

(b) Mobile Source Enforcement Memorandum No. 1A: Information and copies are available by writing to: "U.S. Environmental Protection Agency, 1200 Pennsylvania Ave., NW, Washington, D.C. 20460-0001." The full text of the document is also available in electronic format at http://www.epa.gov/compliance/resources/policies/civil/caa/ mobile/tamper-memo1a.pdf. The document is also available for inspection and copying at most public libraries and "The State Library of Ohio."

(2) Referenced materials.

(a) 40 CFR, Part 85; "Subpart "V" -- Emissions control system performance warranty regulations and voluntary aftermarket part certification program;" 45 FR 34839, May 22, 1980, as amended at 45 FR 78458-78464, November 25, 1980, 46 FR 38692, July 29, 1981, 50 FR 34798, August 27, 1985, 54 FR 32587-32593, August 8, 1989, 58 FR 65554, December 15, 1993, and 64 FR 23919, May 4, 1999, 70 FR 40432, July 13, 2005.

(b) Clean Air Act; contained in 42 USC 7401 to 7671q; "The Public Health and Welfare-Air Pollution Prevention and Control;" published January 3, 2007 in the 2006 Edition of the United States Code.

(c) Mobile Source Enforcement Memorandum No. 1A; "Interim Tampering Enforcement Policy;" dated June 25, 1974, updated April 1997.

(d) Title II of the Clean Air Act; contained in 42 USC 7521 to 7590; "Emission Standards for Moving Sources;" published January 3, 2007 in the 2006 Edition of the United States Code.

Effective: 02/14/2010

R.C. 119.032 review dates: 11/20/2009 and 02/14/2015

CERTIFIED ELECTRONICALLY
Certification

02/03/2010
Date

Promulgated Under: 119.03
Statutory Authority: 3704.03
Rule Amplifies: 3704.16
Prior Effective Dates: 11/8/94, 1/22/05

3745-80-02 **Tampering prohibitions.**

(A) No person shall sell, offer for sale, possess for sale, advertise, manufacture, install or use any part or component intended, by such person, for use with or as part of any motor vehicle when a purpose is to bypass, defeat, or render inoperative, in whole or part, the emission control system.

(B) No person shall introduce leaded fuel into a motor vehicle that is designed, manufactured or certified by the United States environmental protection agency to use only unleaded fuels.

(C) No person shall tamper with any emission control system installed on or in a motor vehicle prior to its sale and delivery to the ultimate purchaser or lessee.

(D) No person shall knowingly operate a motor vehicle that has been tampered with.

(E) No person shall knowingly sell, lease, rent or offer to sell, lease, or rent or offer to transfer title or a right to possession of a motor vehicle that has been tampered with. In the case of a motor vehicle dealer licensed under Chapter 4517. of the Revised Code, a motor vehicle is considered to be offered for sale, lease or rental at a motor vehicle facility unless it is separated or otherwise segregated from other motor vehicles being offered for sale, lease or rental, or unless a placard meeting the following requirements is displayed on the vehicle's windshield.

(1) The statement "this vehicle is not being offered for lease or rental at this time" shall be printed on the placard using block letters of no less than forty point bold type.

(2) The dimensions of the placard shall be at least eight and one half inches by eleven inches.

(F) No person shall knowingly tamper with any emission control system installed on or in a motor vehicle after sale, lease, or rental and delivery of the motor vehicle to the ultimate purchaser, lessee or renter.

(G) Any person who witnesses any violation of this rule or of sections 3704.16 to 3704.162 of the Revised Code, or suspects a violation has occurred, may report the alleged violation by contacting the mobile sources section of Ohio environmental protection agency or the appropriate Ohio environmental protection agency district office or local air pollution control agency.

(H) The following motor vehicles are exempt from the requirements of this rule:

(1) Race motor vehicles which are operated off of public roads and highways one hundred per cent of the time.

(2) Motor vehicles for which salvage certificates of title have been issued under division (C) of section 4504.11 of the Revised Code.

Effective: 02/14/2010

R.C. 119.032 review dates: 11/20/2009 and 02/14/2015

CERTIFIED ELECTRONICALLY
Certification

02/03/2010
Date

Promulgated Under: 119.03
Statutory Authority: 3704.03
Rule Amplifies: 3704.16
Prior Effective Dates: 11/8/94, 1/22/05

3745-80-03 **Anti-tampering inspection procedures and requirements.**

[Comment: For dates of non-regulatory government publications, publications of recognized organizations and associations, federal rules, and federal statutory provisions referenced in this rule, see paragraph (M) of rule 3745-80-01 of the Administrative Code titled "Referenced materials."]

(A) For the purposes of investigating reported tampering violations and conducting routine audits to determine compliance with sections 3704.16 to 3704.162 of the Revised Code, the director may inspect, during normal business hours, any motor vehicle or documents located at a motor vehicle facility.

(B) All anti-tampering inspectors shall satisfactorily complete the training required to receive a designation of authorized representative of the United States environmental protection agency for the purpose of conducting anti-tampering investigations or other motor vehicle anti-tampering training approved by the director. Each anti-tampering inspector who satisfactorily completes the training shall be issued a certificate by the Ohio environmental protection agency. The certificate shall be valid for three years from the date of issuance. Renewal anti-tampering training may be required in order to renew the certificate. If an inspector fails to satisfactorily complete any required renewal training prior to the certificate expiration date, the inspector shall surrender the certificate.

(C) Upon receipt of a reported anti-tampering violation regarding a motor vehicle facility, or for the purpose of inspecting a motor vehicle facility to determine compliance with sections 3704.16 to 3704.162 of the Revised Code, anti-tampering inspectors shall inspect a variety of motor vehicle makes, model years and types so as to provide an adequate cross section of the motor vehicles offered for sale at the motor vehicle facility.

(D) During motor vehicle facility investigations, or investigations of reported violations, pursuant to paragraph (G) of rule 3745-80-02 of the Administrative Code, anti-tampering inspectors shall inspect the motor vehicle emission systems in accordance with the procedures listed in the statewide anti-tampering procedures manual. Motor vehicles shall be inspected for compliance with the original manufacturer's United States environmental protection agency design specifications. After-market replacement parts and add-on and modified parts meeting the performance criteria specified in 40 Code of Federal Regulations, Part 85, Subpart V; the requirements of the United States environmental protection agency policy document, memorandum 1A or have not otherwise been found in violation of the anti-tampering provisions of the Clean Air Act as amended, are considered to be in compliance with this chapter.

(E) The emission system reference manual or the motor vehicle emission control information (VECI) label located on each motor vehicle shall be used to determine the motor vehicle emissions systems requiring inspection. If a conflict exists, the VECI label shall take precedence. The emission systems subject to inspection may include, but not be limited to:

(1) Catalytic converter system;

(2) Evaporative emission system;

(3) Fuel inlet restrictor;

(4) Positive crankcase ventilation system;

(5) Thermostatic air intake system;

(6) Air injection reaction system;

(7) Exhaust gas recirculation system;

(8) Oxygen sensor; and/or

(9) Computer control system.

Effective: 02/14/2010

R.C. 119.032 review dates: 11/20/2009 and 02/14/2015

CERTIFIED ELECTRONICALLY
Certification

02/03/2010
Date

Promulgated Under: 119.03
Statutory Authority: 3704.03
Rule Amplifies: 3704.16
Prior Effective Dates: 11/8/94, 1/22/05

Chapter 3745-100: Toxic Chemical Release Reporting (TRI)

Contact: Muhammad Elsalahat 614-644-3608
Muhammad.Elsalahat@epa.ohio.gov

3745-100-01 **Definitions.**

[Comment: For dates of non-regulatory government publications, publications of recognized organizations and associations, federal rules, and federal statutory provisions referenced in this rule, see the "Incorporation by Reference" section at the end of this rule.

Terms defined in sections 313(b)(1)(C) and 329 of Title III, Emergency Planning and Community Right-to-Know Act, of the Superfund Amendments and Reauthorization Act of 1986, and not explicitly defined herein are used within the meaning given in Title III. For the purpose of this chapter:

(A) "Act" means Title III, Emergency Planning and Community Right-to-Know Act, of the Superfund Amendments and Reauthorization Act of 1986, contained in 42 USC sections 11001 to 11050.

(B) "Article" means a manufactured item which:

(1) Is formed to a specific shape or design during manufacture;

(2) Has end-use functions dependent in whole or part upon its shape or design during end use; and

(3) Does not release a toxic chemical under normal conditions of processing or use of that item at the facility or establishment.

(C) "Benificiation" means the preparation of ores to regulate the size (including crushing and grinding) of the product, to remove unwanted constituents, or to improve the quality, purity, or grade of a desired product.

(D) "Boiler" means an enclosed device using controlled flame combustion and having the following characteristics:

(1)

(a) The unit must have physical provisions for recovering and exporting thermal energy in the form of steam, heated fluids, or heated gases; and

(b) The unit's combustion chamber and primary energy recovery section(s) must be of integral design. To be of integral design, the combustion chamber and the primary energy recovery section(s) (such as waterwalls and superheaters) must be physically formed into one manufactured or assembled unit. A unit in which the combustion chamber and the primary energy recovery section(s) are joined only by ducts or connections carrying

flue gas is not integrally designed; however, secondary energy recovery equipment (such as economizers or air preheaters) need not be physically formed into the same unit as the combustion chamber and the primary energy recovery section. The following units are not precluded from being boilers solely because they are not integral design: process heaters (units that transfer energy directly to a process stream), and fluidized bed combustion units; and

(c) While in operation, the unit must maintain a thermal energy recovery efficiency of at least sixty per cent, calculated in terms of the recovered energy compared with the thermal value of the fuel; and

(d) The unit must export and utilize at least seventy-five per cent of the recovered energy, calculated on an annual basis. In this calculation, no credit shall be given for recovered heat used internally in the same unit. (Examples of internal use are the preheating of fuel or combustion air, and the driving of induced or forced draft fans or feedwater pumps); or

(2) The unit is one which the director has determined, on a case-by-case basis, to be a boiler, after considering the standards in 40 CFR 260.32.

(E) "Coal extraction" means the physical removal or exposure of ore, coal, minerals, waste rock, or overburden prior to beneficiation, and encompasses all extraction-related activities prior to beneficiation. Extraction does not include beneficiation (including coal preparation), mineral processing, in situ leaching or any further activities.

(F) "Customs territory of the United States" means the fifty states, the District of Columbia and Puerto Rico.

(G) "Disposal" means any underground injection, placement in landfills/surface impoundments, land treatment, or other international land disposal.

(H) "Establishment" means an economic unit, generally at a single physical location, where business is conducted or where services or industrial operations are performed.

(I) "Facility" means all buildings, equipment, structures and other stationary items which are located on a single site or on contiguous or adjacent sites and which are owned or operated by the same person (or by any person who controls, is controlled by, or under common control with such person). A facility may contain more than one establishment.

(J) "Full-time employee" means two thousand hours per year of full-time equivalent employment. A facility would calculate the number of full-time employees by

totaling the hours worked during the calendar year by all employees, including contract employees, and dividing that total by two thousand hours.

(K) "Import" means to cause a chemical to be imported into the customs territory of the United States. For purposes of this definition, "to cause" means to intend that the chemical be imported and to control the identity of the imported chemical and the amount to be imported.

(L) "Industrial furnace" means any of the following enclosed devices that are integral components of manufacturing processes and that use thermal treatment to accomplish recovery of materials or energy:

(1) Cement kilns.

(2) Lime kilns.

(3) Aggregate kilns.

(4) Phosphate kilns.

(5) Coke ovens.

(6) Blast furnaces.

(7) Smelting, melting and refining furnaces (including pyrometallurgical devices such as cupolas, reverberator furnaces, sintering machines, roasters, and foundry furnaces).

(8) Titanium dioxide chloride process oxidation reactors.

(9) Methane reforming furnaces.

(10) Pulping liquor recovery furnaces.

(11) Combustion devices used in the recovery of sulfur values from spent sulfuric acid.

(12) Halogen acid furnaces (HAFS) for the production of acid from halogenated hazardous waste generated by chemical production facilities where the furnace is located on the site of a chemical production facility, the acid product has a halogen acid content of at least three percent, the acid product is used in a manufacturing process, and, except for hazardous waste burned as fuel, hazardous waste fed to the furnace has a minimum halogen content of twenty percent as-generated.

(13) Such other devices as the director may, after notice and comment, add to this list on the basis of one or more of the following factors:

(a) The design and use of the device primarily to accomplish recovery of material products;

(b) The use of the device to burn or reduce raw materials to make a material product;

(c) The use of the device to burn or reduce secondary materials as effective substitutes for raw materials, in processes using raw materials as principal feedstocks;

(d) The use of the device to burn or reduce secondary materials as ingredients in an industrial process to make a material product;

(e) The use of the device in common industrial practice to produce a material product; and

(f) Other factors, as appropriate.

(M) "Manufacture" means to produce, prepare, import or compound a toxic chemical. Manufacture also applies to a toxic chemical that is produced coincidentally during the manufacture, processing, use or disposal of another chemical or mixture of chemicals, including a toxic chemical that is separated from other chemicals or mixture of chemicals as a byproduct, and a toxic chemical that remains in that other chemical or mixture of chemicals as an impurity.

(N) "Mixture" means any combination of two or more chemicals if the combination is not, in whole or in part, the result of a chemical reaction. However, if the combination was produced by a chemical reaction, but could have been produced without a chemical reaction, it is also treated as a mixture. A mixture also includes any combination which consists of a chemical and associated impurities.

(O) "NAICS" means North American industrial classification system.

(P) "Ohio EPA" means the Ohio environmental protection agency.

(Q) "Otherwise use" or "use" means any use of a toxic chemical, including a toxic chemical contained in a mixture or other trade name product or waste, that is not covered by the terms "manufacture" or "process". Otherwise use of a toxic chemical does not include disposal, stabilization (without subsequent distribution in commerce), or treatment for destruction unless:

(1) The toxic chemical that was disposed, stabilized, or treated for destruction was received from off-site for the purposes of further waste management; or

(2) The toxic chemical that was disposed, stabilized, or treated for destruction was manufactured as a result of waste management activities on materials received from off-site for the purposes of further waste management activities.

Relabeling or redistributing a container of a toxic chemical where no repackaging of the toxic chemical occurs does not constitute use or processing of the toxic chemical.

(R) "Overburden" means the unconsolidated material that overlies a deposit of useful materials or ores. It does not include any portion of ore or waste rock.

(S) "Previously classified" means properly classified according to paragraph (B) of rule 3745-100-05 of the Administrative Code under a given SIC code, as identified in the "Standard Industrial Classification Manual."

(T) "Process" means the preparation of a toxic chemical, after its manufacture, for distribution in commerce:

(1) In the same form or physical state as, or in a different form or physical state from, that in which it was received by the person so preparing such substance; or

(2) As part of an article containing the toxic chemical. Process also applies to the processing of a toxic chemical contained in a mixture or trade name product.

(U) "RCRA approved test method" includes SW-846 method 9095A ("Paint Filter Liquids Test") contained in "SW-846 Test Methods for Evaluating Solid Waste, Physical/Chemical Methods,".

(V) "Release" means any spilling, leaking, pumping, pouring, emitting, emptying, discharging, injecting, escaping, leaching, dumping or disposing into the environment (including the abandonment or discarding of barrels, containers and other closed receptacles) of any toxic chemical.

(W) "Senior management official" means an official with management responsibility for the person or persons completing the report, or the manager of environmental programs for the facility or establishment, or for the corporation owning or operating the facility or establishment responsible for certifying similar reports under other environmental regulatory requirements.

(X) "SIC" means standard industrial classification.

(Y) "Technically qualified individual" means a person or persons who:

(1) Because of education, training or experience, or a combination of these factors, is capable of understanding the health and environmental risks associated with the chemical substance which is used under his or her supervision;

(2) Is responsible for enforcing appropriate methods of conducting scientific experimentation, analysis, or chemical research to minimize such risks; and

(3) Is responsible for the safety assessments and clearances related to the procurement, storage, use and disposal of the chemical substance as may be appropriate or required within the scope of conducting a research and development activity.

(Z) "Title III" means Title III, Emergency Planning and Community Right-to-Know Act, of the Superfund Amendments and Reauthorization Act of 1986, contained in 42 USC sections 11001 to 11050.

(AA) "Toxic chemical" means a chemical or chemical category listed in rule 3745-100-10 of the Administrative Code.

(BB) "Trade name product" means a chemical or mixture of chemicals that is distributed to other persons and that incorporate a toxic chemical component that is not identified by the applicable chemical name or "Chemical Abstracts Service" registry number listed in rule 3745-100-10 of the Administrative Code.

(CC) "Treatment for destruction" means the destruction of a toxic chemical in waste such that the substance is no longer the toxic chemical subject to reporting under Section 313 of the Emergency Planning and Community Right-to Know Act of 1986. Treatment for destruction does not include the destruction of a toxic chemical in waste where the toxic chemical has a heat value greater than five thousand British thermal units and is combusted in any device that is an industrial furnace or boiler.

(DD) "USEPA" means the United States environmental protection agency.

(EE) "Waste stabilization" means any physical or chemical process used to either reduce the mobility of hazardous constituents in a hazardous waste or eliminate free liquid as determined by a Resource Conservation and Recovery Act approved test method for evaluating solid waste as defined in this section. A waste stabilization process includes mixing the hazardous waste with binders or other materials, and curing the resulting hazardous waste and binder mixture. Other synonymous terms used to refer to this process are "stabilization," "waste fixation," or "waste solidification".

(FF) Incorporation by reference. This chapter includes references to certain matter or materials. The text of the incorporated materials is not included in the regulations contained in this chapter. The materials are hereby made a part of the regulations in this chapter. For materials subject to change, only the specific version specified in the regulation are incorporated. Material is incorporated as it exists on the effective

date of this rule. Except for subsequent annual publication of existing (unmodified) Code of Federal Regulation compilations, any amendment or revision to a referenced document is not incorporated unless and until this rule has been amended to specify the new dates.

(1) Availability. The materials incorporated by reference are available as follows:

(a) Chemical abstract service (CAS). Information can be obtained by writing to: "Chemical Abstract Service, 2540 Olentangy River Road, Columbus, OH 43202," or by visiting their web site at www.cas.org.

(b) Code of Federal Regulations. Information and copies may be obtained by writing to: "Superintendent of Documents, Attention: New Orders, PO Box 371954, Pittsburgh, PA 15250-7954." The full text of the CFR is also available in electronic format at www.access.gpo.gov/nara/cfr/. The CFR compilations are also available for inspection and copying at most public libraries and "The State Library of Ohio."

(c) Consumer Product Safety Act. Information and copies may be obtained by writing to: "U.S. Consumer Product Safety Commission, Washington, D.C. 20207-0001." Or electronically at http://www.cpsc.gov/businfo/cpsatext.html. A copy of the Act is also available for inspection and copying at most public libraries and "The State Library of Ohio."

(d) Dunn & Bradstreet. Information may be obtained by contacting: The D&B Corporation, 103 JFK Parkway, Short Hills, NJ 07078; or by calling their customer service number at 1-800-234-3467 or by visiting the web site at http://www.dnb.com/us/

(e) Emergency Planning and Community Right-to-Know Act of 1986. Information and copies may be obtained by writing to: "Superintendent of Documents, Attention: New Orders, PO Box 371954, Pittsburgh, PA 15250-7954." The full text of the Act is also available in electronic format at http://www4.law.cornell.edu/uscode/42/ch116.html. The act is also available for inspection and copying at most public libraries and "The State Library of Ohio."

(f) Resource Conservation and Recovery Act. Information and copies may be obtained by writing to: "Superintendent of Documents, Attn: New Orders, PO Box 371954, Pittsburgh, PA 15250-7954." The full text of the act is also available in electronic format at http://www4.law.cornell.edu/uscode/42/ch82.html. A copy of the act is also available for inspection and copying at most public libraries and "The State Library of Ohio."

(g) Restatement of Torts, Sec. 757, comment B, 1939. Available for inspection and copying at most public libraries and "The State Library of Ohio."

(h) Standard industrial classification manual (SICM). Information and copies may be ordered by writing to: "U.S. Department of Commerce, Technology Administration, National Technical Information Service, Springfield, Virginia, 22161." or by calling 1-800-553-6847. A copy of the manual is also available for inspection and copying at most public libraries and "The State Library of Ohio."

(i) Substitute Senate Bill 367 of the 117th General Assembly. This law, Chapter 3750. of the Revised Code (emergency planning, ORC), provides, for the implementation of EPCRA in Ohio. The administrative body for the implementation of Chapter 3750. of the Revised Code, is the state emergency response commission (SERC), created by executive order in 1987. A copy of the bill is available for inspection and copying at most public libraries and "The State Library of Ohio."

(j) Superfund Amendments and Reauthorization Act of 1986. Information and copies may be obtained by writing to: "Superintendent of Documents, Attention: New Orders, PO Box 371954, Pittsburgh, PA 15250-7954." The full text of the act is also available in electronic format at http://www4.law.cornell.edu/uscode/42/ch103.html. The act is also available for inspection and copying at most public libraries and "The State Library of Ohio."

(k) SW-846 method 9095A as contained in "SW-846 Test Methods for Evaluating Solid Waste, Physical/Chemical Methods," Information and copies may be obtained by writing to: "Superintendent of Documents, Attn: New Orders, PO Box 371954, Pittsburgh, PA 15250-7954." These documents are also available in electronic format at http://www.epa.gov/epaoswer/hazwaste/test/main.htm. SW-846 methods are also available for inspection and copying at most public libraries and "the State library of Ohio."

(l) United States Code. Information and copies may be obtained by writing to: "Superintendent of Documents, Attn: New Orders, PO Box 371954, Pittsburgh, PA 15250-7954." The full text of the United States Code is also available in electronic format at http://www4.law.cornell.edu/uscode/. The U.S.C. compilations are also available for inspection and copying at most public libraries and "The State Library of Ohio."

(m) USEPA Form R (EPA Form 9350-1) Form R schedule 1, and Form A. The most current version of USEPA Form R (EPA Form 9350-1), Form R schedule 1, and Form A may be found on the following USEPA program web site: http://www.epa.gov/tri. Any subsequent changes to the Form R,

Form R Schedule 1, or Form A will be posted on this web site. Submitters may also contact the TRI program at (202) 564-9554 to obtain this information.

(2) Incorporated materials.

(a) 15 USC 2051 to 2084: "Consumer Product Safety Act;" Public Law 92-573, 86 Stat. 1207, Oct. 27, 1972.

(b) 29 CFR 1910.1200; "Hazard communication;" 59 FR 6170, Feb 9, 1994, as amended at 59 FR 17479, Apr. 13 1994; 59 FR 65948, Dec. 22, 1994; 61 FR 9245, Mar. 7. 1996.

(c) 40 CFR 260.32; "Variances to be classified as a boiler;" 50 FR 662, Jan. 4, 1985, as amended at 59 FR 48041, Sept. 19, 1994.

(d) 40 CFR 350.7; "Substantiating claims of trade secrecy;" 53 FR 28801, July 29, 1988.

(e) 40 CFR 350.16; "Address to send trade secrecy claims and petitions requesting disclosure;" 68 FR 64724, Nov. 14, 2003.

(f) 40 CFR 372; "Toxic Chemical Release Reporting: Community Right-to-Know;" 53 FR 4525, Feb. 16, 1988, as amended at 53 FR 12748, Apr. 18, 1988; 55 FR 30656, July 26, 1990; 53 FR 12748, Apr. 18, 1988; 56 FR 29185, June 26, 1991; 59 FR 61501, Nov. 30, 1994; 59 FR 61502, Nov. 30, 1994; 62 FR 23891, May 1, 1997;; 62 FR 23892, May 1, 1997; 64 FR 58750, Oct. 29, 1999; 64 FR 58751, Oct. 29, 1999; 64 FR 58753, Oct. 29, 1999; 66 FR 4527, Jan. 17, 2001.

(g) 40 CFR 372.27; "Alternate thresholds and certifications;" 59 FR 61502, Nov. 30, 1994, as amended at 64 FR 58750, Oct. 29, 1999; 71 FR 76944, Dec. 22, 2006.

(h) 40 CFR 372.85; "Toxic Chemical Release Reporting form and instructions;" 56 FR 29186, June 26, 1991, as amended at 64 FR 58753, Oct. 29, 1999.

(i) 42 USC 11001 to 11050; "Title III of the Superfund Amendments and Reauthorization Act of 1986; Contained in 42 USC 11001 to 11050; published January 6, 2003 in Supplement II of the 2000 edition of the United States Code; Pub. L. 99-499, Title III, Section 301-330, October 17, 1986, 100 Stat.1729-1758.

(j) "Consumer Product Safety Act;" Public Law 92-573, 86 Stat. 1207, Oct. 27, 1972.

(k) Resource Conservation and Recovery Act; Subtitle C, contained in 42 USC Section 6921 to 6939e, "Hazardous Waste Management;" Pub. L. 89-272, title II, Sec. 3001, as added Pub. L. 94-580, Sec. 2, Oct. 21, 1976, 90 Stat. 2806; amended Pub. L. 96-482, Sec. 7, Oct. 21, 1980, 94 Stat. 2336; Pub. L. 98-616, title II, Secs. 221(a), 222, 223(a), Nov. 8, 1984, 98 Stat. 3248, 3251, 3252; Pub. L. 104-119, Sec. 4(1), Mar. 26, 1996, 110 Stat. 833.

(l) "Restatement of Torts, Sec. 757, comment B, 1939".

(m) Section 313 of the Emergency Planning and Community Right-to-Know Act; "Toxic chemical release forms;" contained in 42 USC 11023 and 11048; published January 3, 2005 in Supplement IV of the 2000 edition of the United States Code; Pub. L. 99-499, title III, Sec. 313, Oct. 17, 1986, 100 Stat. 1741.

(n) Section 329 of the Emergency Planning and Community Right-to-Know Act; contained in 42 USC 11049; "Definitions;" published January 3, 2005 in Supplement IV of the 2000 edition of the United States Code; Pub. L. 99-499, title III, Sec. 329, Oct. 17, 1986, 100 Stat. 1757.

(o) Standard industrial classification manual; United States. office of management and budget; last amended 1988.

(p) SW-846 method 9095A; "Paint filter liquids test;" revision 2, November, 2004.

(q) Title III of the Superfund Amendments and Reauthorization Act of 1986; contained in 42 USC 11001 to 11050. Published January 3, 2005 in Supplement IV of the 2000 edition of the United States Code; Pub. L.99-499, Title III, Section 301-330, October 17, 1986, 100 Stat.1729-1758.

(r) USEPA Form A (EPA Form 9350-2); most current form as reviewed and approved by the United States office of management and budget.

(s) USEPA Form R and USEPA Form R Schedule 1 (EPA Form 9350-1); most current form as reviewed and approved by the United States office of management and budget.

Effective: 09/25/2008

R.C. 119.032 review dates: 01/16/2011

CERTIFIED ELECTRONICALLY
Certification

09/15/2008
Date

Promulgated Under: 119.03
Statutory Authority: 3751.02
Rule Amplifies: 3751.01
Prior Effective Dates: 6/22/1989, 5/07/2001, 01/16/2006

.

3745-100-02 **Persons subject to this chapter.**

Owners and operators of facilities described in rules 3745-100-05 and 3745-100-09 of the Administrative Code are subject to the requirements of this chapter. If the owner and operator of a facility are different persons, only one need report under rule 3745-100-07 of the Administrative Code or provide a notice under rule 3745-100-09 of the Administrative Code for each toxic chemical in a mixture or trade name product distributed from the facility. However, if no report is submitted or notice provided, the Ohio EPA will hold both the owner and the operator liable under section 3751.10 of the Revised Code, except as provided in paragraph (E) of rule 3745-100-08 and paragraph (G) of rule 3745-100-09 of the Administrative Code.

Effective: 09/25/2008

R.C. 119.032 review dates: 07/09/2008 and 09/25/2013

CERTIFIED ELECTRONICALLY
Certification

09/15/2008
Date

Promulgated Under: 119.03
Statutory Authority: 3751.02
Rule Amplifies: 3751.03
Prior Effective Dates: 6/22/1989, 1/16/2006

3745-100-03 **Record keeping.**

(A) Each person subject to the reporting requirements of this chapter must retain the following records for a period of three years from the date of submission of a report under rule 3745-100-07 of the Administrative Code:

(1) A copy of each report submitted by the person under rule 3745-100-07 of the Administrative Code.

(2) All supporting materials and documentation used by the person to make the compliance determination that the facility or establishments is a covered facility under rule 3745-100-05 or 3745-100-09 of the Administrative Code.

(3) Documentation supporting the report submitted under rule 3745-100-07 of the Administrative Code including:

(a) Documentation supporting any determination that a claimed allowable exemption under rule 3745-100-08 of the Administrative Code applies.

(b) Data supporting the determination of whether a threshold under rule 3745-100-06 of the Administrative Code applies for each toxic chemical.

(c) Documentation supporting the calculations of the quantity of each toxic chemical released to the environment or transferred to an off-site location.

(d) Documentation supporting the use indications and quantity on-site reporting for each toxic chemical, including dates of manufacturing, processing or use.

(e) Documentation supporting the basis of estimate used in developing any release or off-site transfer estimates for each toxic chemical.

(f) Receipts or manifests associated with the transfer of each toxic chemical in waste to off-site locations.

(g) Documentation supporting reported waste treatment methods, estimates of treatment efficiencies, ranges of influent concentrations to such treatment, the sequential nature of treatment steps, if applicable, and the actual operating data, if applicable, to support the waste treatment efficiency estimate for each toxic chemical.

(B) Each person subject to the notification requirements of this chapter must retain the following records for a period of three years from the date of the submission of a notification under rule 3745-100-09 of the Administrative Code.

(1) All supporting materials and documentation used by the person to determine whether a notice is required under rule 3745-100-09 of the Administrative Code.

(2) All supporting materials and documentation used in developing each required notice under rule 3745-100-09 of the Administrative Code and a copy of each notice.

(C) Records retained under this rule must be maintained at the facility to which the report applies or from which a notification was provided. Such records must be readily available for purposes of inspection by the Ohio EPA.

(D) Each owner or operator who determines that the owner operator may apply the alternate threshold as specified under rule 3745-100-14(A) of the Administrative Code must retain the following records for a period of three years from the date of the submission of the certification statement as required under rule 3745-100-14(B) of the Administrative Code.

(1) A copy of each certification statement submitted by the person under rule 3745-100-14(B) of the Administrative Code.

(2) All supporting materials and documentation used by the person to make the compliance determination that the facility or establishment is eligible to apply the alternate threshold as specified in rule 3745-100-14 of the Administrative Code.

(3) Documentation supporting the certification statement submitted under rule 3745-100-14(B) of the Administrative Code including:

(a) Data supporting the determination of whether the alternate threshold specified under rule 3745-100-14(A) of the Administrative Code applies for each toxic chemical.

(b) Documentation supporting the calculation of annual reportable amount, as defined in rule 3745-100-14(A) of the Administrative Code, for each toxic chemical, including documentation supporting the calculations and the calculations of each data element combined for the annual reportable amount.

(c) Receipts or manifests associated with the transfer of each chemical in waste to off-site locations.

Effective: 01/16/2006

R.C. 119.032 review dates: 10/03/2005 and 01/16/2011

CERTIFIED ELECTRONICALLY
Certification

01/04/2006
Date

Promulgated Under: 119.03
Statutory Authority: R. C. Chapter 3751.02
Rule Amplifies: R. C. Chapter 3751.03
Prior Effective Dates: 6/22/1989, 5/07/2001.

3745-100-04 **Compliance and enforcement.**

Violators of the requirements of this chapter shall be liable for a civil penalty in an amount not to exceed twenty-five thousand dollars each day for each violation as provided in section 3751.10 of the Revised Code.

Effective: 01/16/2006

R.C. 119.032 review dates: 10/03/2005 and 01/16/2011

CERTIFIED ELECTRONICALLY
Certification

01/04/2006
Date

Promulgated Under: 119.03
Statutory Authority: R. C. Chapter 3751.02
Rule Amplifies: R. C. Chapter 3751.03
Prior Effective Dates: 6/22/1989

3745-100-05 **Covered facilities for toxic chemical release reporting.**

[Comment: For dates of non-regulatory government publications, publications of recognized organizations and associations, federal rules, and federal statutory provisions referenced in this rule, see the "Incorporation by Reference" paragraph at the end of rule 3745-100-01 of the Administrative Code.]

A facility that meets all of the following criteria for a calendar year is a covered facility for that calendar year and must report under rule 3745-100-07 of the Administrative Code.

(A) The facility has ten or more full-time employees.

(B) The facility is in a standard industrial classification (SIC) (as in effect on January 1, 1987) major group or industry code listed in paragraph (A) of rule 3745-100-17 of the Administrative Code for which the corresponding North American industry classification (NAICS) (as in effect on January 1, 2007, for reporting year 2008 and thereafter) subsector and industry codes are listed in paragraphs (B) and (C) of rule 3745-100-17 of the Administrative Code) by virtue of the fact that it meets one of the following criteria:

(1) The facility is an establishment with a primary SIC major group or industry code listed in paragraph (A) of rule 3745-100-17 of the Administrative Code, or a primary NAICS subsector or industry code listed in paragraph (B) or (C) of rule 3745-100-17 of the Administrative Code.

(2) The facility is a multi-establishment complex where all establishments have primary SIC major group or industry codes listed in paragraph (A) of rule 3745-100-17 of the Administrative Code, or primary NAICS subsector or industry codes listed in paragraph (B) or (C) of rule 3745-100-17 of the Administrative Code.

(3) The facility is a multi-establishment complex in which one of the following is true:

(a) The sum of the value of services provided and/or products shipped and/or produced from those establishments that have primary SIC major group or industry codes listed in paragraph (A) of rule 3745-100-17 of the Administrative Code, or primary NAICS subsector or industry codes listed in paragraph (B) or (C) of rule 3745-100-17 of the Administrative Code is greater than fifty per cent of the total value of all services provided and/or products shipped from and/or produced by all establishments at the facility.

(b) One establishment having a primary SIC major group or industry code listed in paragraph (A) of rule 3745-100-17 of the Administrative Code, or a

primary NAICS subsector or industry code listed in paragraph (B) or (C) of rule 3745-100-17 of the Administrative Code contributes more in terms of value of services provided and/or products shipped from and/or produced at the facility than any other establishment within the facility.

(c) The facility manufactured (including imported), processed or otherwise used a toxic chemical in excess of an applicable threshold quantity of that chemical as set forth in rule 3745-100-06, 3745-100-14, or 3745-100-16 of the Administrative Code.

Replaces: 3745-100-05

Effective: 09/25/2008

R.C. 119.032 review dates: 09/25/2013

CERTIFIED ELECTRONICALLY
Certification

09/15/2008
Date

Promulgated Under: 119.03
Statutory Authority: 3751.02
Rule Amplifies: 3751.03
Prior Effective Dates: 6/22/1989, 5/07/2001, 01/16/2006

3745-100-06 **Thresholds for reporting.**

Except as provided in rule 3745-100-14 and rule 3745-100-16 of the Administrative Code, the threshold amounts for purposes of reporting under rule 3745-100-07 of the Administrative Code for toxic chemicals are as follows.

(A) With respect to a toxic chemical manufactured (including imported) or processed at a facility during the following calendar years:

(1) 1987 - seventy-five thousand pounds of the chemical manufactured or processed for the year.

(2) 1988 - fifty thousand pounds of the chemical manufactured or processed for the year.

(3) 1989 and thereafter - twenty-five thousand pounds of the chemical manufactured or processed for the year.

(B) With respect to a chemical otherwise used at a facility, ten thousand pounds of the chemical used for the applicable calendar year.

(C) With respect to activities involving a toxic chemical at a facility, when more than one threshold applies to the activities, the owner or operator of the facility must report if it exceeds any applicable threshold and must report on all activities at the facility involving the chemical, except as provided in rule 3745-100-08 of the Administrative Code.

(D) When a facility manufactures, processes or otherwise uses more than one member of a chemical category listed in paragraph (C) of rule 3745-100-10 of the Administrative Code, the owner or operator of the facility must report if it exceeds any applicable threshold for the total volume of all the members of the category involved in the applicable activity. Any such report must cover all activities at the facility involving members of the category.

(E) A facility may process or otherwise use a toxic chemical in a recycle/reuse operation. To determine whether the facility has processed or used more than an applicable threshold of the chemical, the owner or operator of the facility shall count the amount of the chemical added to the recycle/reuse operation during the calendar year. In particular, if the facility starts up such an operation during a calendar year, or in the event that the contents of the whole recycle/reuse operation are replaced in a calendar year, the owner or operator of the facility shall also count the amount of the chemical placed into the system at these times.

(F) A toxic chemical may be listed in rule 3745-100-10 of the Administrative Code with the notation that only persons who manufacture the chemical, or manufacture it by a

certain method, are required to report. In that case, only owners or operators of facilities that manufacture that chemical as described in rule 3745-100-10 of the Administrative Code in excess of the threshold applicable to such manufacture in rules 3745-10-06, 3745-100-14, and 3745-100-16 of the Administrative Code are required to report. In completing the reporting form, the owner or operator is only required to account for the quantity of the chemical so manufactured and releases associated with such manufacturing, but not releases associated with subsequent processing or use of the chemical at that facility. Owners and operators of facilities that solely process or use such a chemical are not required to report for that chemical.

(G) A toxic chemical may be listed in rule 3745-100-10 of the Administrative Code with the notation that it is in a specific form (e.g., fume or dust, solution, or friable) or of a specific color (e.g., yellow or white). In that case, only owners or operators of facilities that manufacture, process or use that chemical in the form or of the color specified in rule 3745-100-10 of the Administrative Code, in excess of the threshold applicable to such activity in rules 3745-10-06, 3745-100-14, and 3745-100-16 of the Administrative Code, are required to report. In completing the reporting form, the owner or operator is only required to account for the quantity of the chemical manufactured, processed or used in the form or color specified in rule 3745-100-10 of the Administrative Code and for releases associated with the chemical in that form or color. Owners or operators of facilities that solely manufacture, process or use such a chemical in a form or color other than those specified by rule 3745-100-10 of the Administrative Code are not required to report for that chemical.

(H) Metal compound categories are listed in paragraph (C) of rule 3745-100-10 of the Administrative Code. For purposes of determining whether any of the thresholds specified in rules 3745-10-06, 3745-100-14, and 3745-100-16 of the Administrative Code are met for the metal compound category, the owner or operator of a facility must make the threshold determination based on the total amount of all members of the metal compound category manufactured, processed or used at the facility. In completing the release portion of the reporting form for releases of the metal compounds, the owner or operator is only required to account for the weight of the parent metal released. Any contribution to the mass of the release attributable to other portions of each compound in the category is excluded.

Effective: 01/16/2006

R.C. 119.032 review dates: 10/03/2005 and 01/16/2011

CERTIFIED ELECTRONICALLY
Certification

01/04/2006
Date

Promulgated Under: 119.03
Statutory Authority: R. C. Chapter 3751.02
Rule Amplifies: R. C. Chapter 3751.03
Prior Effective Dates: 6/22/1989, 5/07/2001

3745-100-07 **Reporting requirements and schedule for reporting.**

[Comment: For dates of non-regulatory government publications, publications of recognized organizations and associations, federal rules, and federal statutory provisions referenced in this rule, see the "Incorporation by Reference" section at the end of rule 3745-100-01 of the Administrative Code.]

(A) For each toxic chemical known by the owner or operator to be manufactured (including imported), processed or otherwise used in excess of an applicable threshold quantity in rule 3745-100-06, 3745-100-14, or 3745-100-16 of the Administrative Code at its covered facility described in rule 3745-100-05 of the Administrative Code for a calendar year, the owner or operator must submit to the EPA a completed "U.S. EPA Form R" (EPA Form 9350-1) and, for the dioxin and dioxin-like compounds category, EPA Form R Schedule 1 (EPA Form 9350-3) in accordance with the instructions in rule 3745-100-11 of the Administrative Code.

(B)

(1) The owner or operator of a covered facility is required to report as described in paragraph (A) of this rule on a toxic chemical that the owner or operator knows is present as a component of a mixture or trade name product which the owner or operator receives from another person, if that chemical is imported, processed or otherwise used by the owner or operator in excess of an applicable threshold quantity in rule 3745-100-06, 3745-100-14, or 3745-100-16 of the Administrative Code at the facility as part of that mixture or trade name product.

(2) The owner or operator knows that a toxic chemical is present as a component of a mixture or trade name product:

(a) If the owner or operator knows or has been told the chemical identity or "Chemical Abstracts Service" registry number of the chemical and the identity or number corresponds to an identity or number in rule 3745-100-10 of the Administrative Code; or

(b) If the owner or operator has been told by the supplier of the mixture or trade name product that the mixture or trade name product contains a toxic chemical subject to section 313 of the act or this rule.

(3) To determine whether a toxic chemical which is a component of a mixture or trade name product has been imported, processed or otherwise used in excess of an applicable threshold in rule 3745-100-06 of the Administrative Code at the facility, the owner or operator shall consider only the portion of the mixture or trade name product that consists of the toxic chemical and that is imported, processed or otherwise used at the facility, together with any other amounts of

the same toxic chemical that the owner or operator manufacturers, imports, processes or otherwise uses at the facility as follows:

(a) If the owner or operator knows the specific chemical identity of the toxic chemical and the specific concentration at which it is present in the mixture or trade name product, the owner or operator shall determine the weight of the chemical imported, processed or otherwise used as part of the mixture or trade name product at the facility and shall combine that with the weight of the toxic chemical manufactured (including imported), processed or otherwise used at the facility other than as part of the mixture or trade name product. After combining these amounts, if the owner or operator determines that the toxic chemical was manufactured, processed or otherwise used in excess of an applicable threshold in rule 3745-100-06 of the Administrative Code, the owner or operator shall report the specific chemical identity and all releases of the toxic chemical on "U.S. EPA Form R" in accordance with the instructions specified in rule 3745-100-11 of the Administrative Code.

(b) If the owner or operator knows the specific chemical identity of the toxic chemical and does not know the specific concentration at which the chemical is present in the mixture or trade name product, but has been told the upper-bound concentration of the chemical in the mixture or trade name product, the owner or operator shall presume that the toxic chemical is present in the mixture or trade name product at the upper-bound concentration, shall determine whether the chemical has been manufactured, processed or otherwise used at the facility in excess of an applicable threshold as provided in paragraph (B)(3)(a) of this rule and shall report as provided in paragraph (B)(3)(a) of this rule.

(c) If the owner or operator knows the specific chemical identity of the toxic chemical, does not know the specific concentration at which the chemical is present in the mixture or trade name product and has not been told the upper-bound concentration of the chemical in the mixture or trade name product, and has not otherwise developed information on the composition of the chemical in the mixture or trade name product, then the owner or operator is not required to factor that chemical in that mixture or trade name product into threshold and release calculations for that chemical.

(d) If the owner or operator has been told that a mixture or trade name product contains a toxic chemical, does not know the specific chemical identity of the chemical and knows the specific concentration at which it is present in the mixture or trade name product, the owner or operator shall determine the weight of the chemical imported, processed or otherwise used as part of the mixture or trade name product at the facility. Since the owner or operator does not know the specific identity of the toxic chemical, the owner or operator shall make the threshold determination only for the

weight of the toxic chemical in the mixture or trade name product. If the owner or operator determines that the toxic chemical was imported, processed or otherwise used as part of the mixture or trade name product in excess of an applicable threshold in rule 3745-100-06 of the Administrative Code, the owner or operator shall report the generic chemical name of the toxic chemical, or a trade name if the generic chemical name is not known, and all releases of the toxic chemical on "U.S. EPA Form R" and in accordance with the instructions specified in rule 3745-100-11 of the Administrative Code.

(e) If the owner or operator has been told that a mixture or trade name product contains a toxic chemical, does not know the specific chemical identity of the chemical, and does not know the specific concentration at which the chemical is present in the mixture or trade name product, but has been told the upper-bound concentration of the chemical in the mixture or trade name product, the owner or operator shall presume that the toxic chemical is present in the mixture or trade name product at the upper-bound concentration, shall determine whether the chemical has been imported, processed or otherwise used at the facility in excess of applicable threshold as provided in paragraph (B)(3)(d) of this rule, and shall report as provided in paragraph (B)(3)(d) of this rule.

(f) If the owner or operator has been told that a mixture or trade name product contains a toxic chemical, does not know the specific chemical identity of the chemical, and does not know the specific concentration at which the chemical is present in the mixture or trade name product, including information they have themselves developed, and has not been told the upper-bound concentration of the chemical in the mixture or trade name product, the owner or operator is not required to report with respect to that toxic chemical.

(C) A covered facility may consist of more than one establishment. The owner or operator of such a facility at which a toxic chemical was manufactured (including imported), processed or otherwise used in excess of an applicable threshold may submit a separate "U.S. EPA Form R" for each establishment or for each group of establishments within the facility to report the activities involving the toxic chemical at each establishment or group of establishments, provided that activities involving that toxic chemical at all the establishments within the covered facility are reported. If each establishment or group of establishments files separate reports, then for all other chemicals subject to reporting at that facility they must also submit separate reports. However, an establishment or group of establishments does not have to submit a report for a chemical that is not manufactured (including imported), processed, or otherwise used or released at that establishment or group of establishments.

(D) Each report under this rule for activities involving a toxic chemical that occurred during a calendar year at a covered facility must be submitted on or before July first of the next year. The first such report for calendar year 1988 activities must be submitted on or before July 1, 1989.

Effective: 09/25/2008

R.C. 119.032 review dates: 07/09/2008 and 09/25/2013

CERTIFIED ELECTRONICALLY
Certification

09/15/2008
Date

Promulgated Under: 119.03
Statutory Authority: 3751.02
Rule Amplifies: 3751.03
Prior Effective Dates: 06/22/1989, 05/07/2001, 1/16/2006

3745-100-08 **Exemptions.**

[Comment: For dates of non-regulatory government publications, publications of recognized organizations and associations, federal rules, and federal statutory provisions referenced in this rule, see the "Incorporation by Reference" section at the end of rule 3745-100-01.]

(A) De Minimis concentrations of a toxic chemical in a mixture. If a toxic chemical is present in a mixture of chemicals at a covered facility, and the toxic chemical is in a concentration in the mixture which is below one percent of the mixture, or 0.1 per cent of the mixture in the case of a toxic chemical which is a carcinogen as defined in 29 CFR 1910.1200 (d)(4), a person is not required to consider the quantity of the toxic chemical present in such mixture when determining whether an applicable threshold has been met under rule 3745-100-06 of the Administrative Code or determining the amount of release to be reported under rule 3745-100-07 of the Administrative Code. This exemption applies whether the person received the mixture from another person or the person produced the mixture, either by mixing the chemicals involved or by causing a chemical reaction which resulted in the creation of the toxic chemical in the mixture. However, this exemption applies only to the quantity of the toxic chemical present in the mixture. If the toxic chemical is also manufactured (including imported), processed or otherwise used at the covered facility other than as part of the mixture or in a mixture at higher concentrations in excess of an applicable threshold quantity set forth in rule 3745-100-06 of the Administrative Code, the person is required to report under rule 3745-100-07 of the Administrative Code. This exemption does not apply to toxic chemicals listed in rule 3745-100-16 of the Administrative Code, except for purposes of rule 3745-100-09 (D)(1) of the Administrative Code.

(B) Articles. If a toxic chemical is present in an article at a covered facility, a person is not required to consider the quantity of the toxic chemical present in such article when determining whether an applicable threshold has been met under rules 3745-100-06, 3745-100-14, or 3745-100-16 of the Administrative Code or determining the amount of release to be reported under rule 3745-100-07 of the Administrative Code. This exemption applies whether the person received the article from another person or the person produced the article. However, this exemption applies only to the quantity of the toxic chemical present in the article. If the toxic chemical is manufactured (including imported), processed or otherwise used at the covered facility other than as part of the article in excess of an applicable threshold quantity set forth in rule 3745-100-06 of the Administrative Code, the person is required to report under rule 3745-100-07 of the Administrative Code. Persons potentially subject to this exemption should carefully review the definitions of "article" and "release" in rule 3745-100-01 of the Administrative Code. If a release of a toxic chemical occurs as a result of the processing or use of an item at the facility, that item does not meet the definition of "article."

(C) Uses. If a toxic chemical is used at a covered facility for a purpose described in paragraphs (C)(1) to (C)(5) of this rule, a person is not required to consider the quantity of the toxic chemical used for such purpose when determining whether an applicable threshold has been met under rule 3745-100-06, 3745-100-14, or 3745-100-16 of the Administrative Code or determining the amount of releases to be reported under rule 3745-100-07 of the Administrative Code. However, this exemption only applies to the quantity of the toxic chemical used for the purpose described in paragraphs (C)(1) to (C)(5) of this rule. If the toxic chemical is also manufactured (including imported), processed or otherwise used at the covered facility other than as described in paragraphs (C)(1) to (C)(5) of this rule in excess of an applicable threshold quantity set forth in rule 3745-100-06 of the Administrative Code, the person is required to report under rule 3745-100-07 of the Administrative Code. This exemption only applies to the quantity of the toxic chemical for the following purposes:

(1) Use as a structural component of the facility.

(2) Use of products for routine janitorial or facility grounds maintenance. Examples include use of janitorial cleaning supplies, fertilizers and pesticides similar in type or concentration to consumer products.

(3) Personal use by employees or other persons at the facility of foods, drugs, cosmetics or other personal items containing toxic chemicals, including supplies of such products within the facility such as in a facility-operated cafeteria, store or infirmary.

(4) Use of products containing toxic chemicals for the purpose of maintaining motor vehicles operated by the facility.

(5) Use of toxic chemicals present in process water and noncontact cooling water as drawn from the environment or from municipal sources, or toxic chemicals present in air used either as compressed air or as part of combustion.

(D) Activities in laboratories. If a toxic chemical is manufactured, processed or used in a laboratory at a covered facility under the supervision of a technically qualified individual as defined in paragraph (O) of rule 3745-100-01 of the Administrative Code, a person is not required to consider the quantity so manufactured, processed or used when determining whether an applicable threshold has been met under rule 3745-100-06, 3745-100-14, or 3745-100-16 of the Administrative Code or determining the amount of release to be reported under rule 3745-100-07 of the Administrative Code. This exemption does not apply in the following cases:

(1) Specialty chemical production.

(2) Manufacture, processing or use of toxic chemicals in pilot plant scale operations.

(3) Activities conducted outside the laboratory.

(E) Certain owners of leased property. The owner of a covered facility is not subject to reporting under rule 3745-100-07 of the Administrative Code if such owner's only interest in the facility is ownership of the real estate upon which the facility is operated. This exemption applies to owners of facilities such as industrial parks, all or part of which are leased to persons who operate establishments within SIC codes 20 through 39, where the owner has no other business interest in the operation of the covered facility.

(F) Reporting by certain operators of establishments on leased property such as industrial parks. If two or more persons, who do not have any common corporate or business interest (including common ownership or control), operate separate establishments within a single facility, each such person shall treat the establishments it operates as a facility for purposes of this rule. The determinations in rules 3745-100-05 and 3745-100-06 of the Administrative Code shall be made for those establishments. If any such operator determines that its establishment is a covered facility under rule 3745-100-05 of the Administrative Code and that a toxic chemical has been manufactured (including imported), processed or otherwise used at the establishment in excess of an applicable threshold in rule 3745-100-06 of the Administrative Code for a calendar year, the operator shall submit a report in accordance with rule 3745-100-07 of the Administrative Code for the establishment. For purposes of this, a common corporate or business interest includes ownership, partnership, joint ventures, ownership of a controlling interest in one person by the other, or ownership of a controlling interest in both persons by a third person.

(G) Coal extraction activities. If a toxic chemical is manufactured, processed, or otherwise used in extraction by facilities in SIC code 12, a person is not required to consider the quantity of the toxic chemical so manufactured, processed, or otherwise used when determining whether an applicable threshold has been met under rule 3745-100-06, 3745-100-14, or 3745-100-16 of the Administrative Code, or determining the amounts to be reported under rule 3745-100-07 of the Administrative Code.

(H) Metal mining overburden. If a toxic chemical that is a constituent of overburden is processed or otherwise used by facilities in SIC code 10, a person is not required to consider the quantity of the toxic chemical so processed, or otherwise used when determining whether an applicable threshold has been met under rule 3745-100-06, 3745-100-14, or 3745-100-16 of the Administrative Code, or determining the amounts to be reported under rule 3745-100-07 of the Administrative Code.

Effective: 01/16/2006

R.C. 119.032 review dates: 10/03/2005 and 01/16/2011

CERTIFIED ELECTRONICALLY
Certification

01/04/2006
Date

Promulgated Under: 119.03
Statutory Authority: R. C. Chapter 3751.02
Rule Amplifies: R. C. Chapter 3751.03
Prior Effective Dates: 6/22/1989, 5/07/2001.

3745-100-09 **Notification about toxic chemicals.**

[Comment: For dates of non-regulatory government publications, publications of recognized organizations and associations, federal rules, and federal statutory provisions referenced in this rule, see the "Incorporation by Reference" section at the end of rule 3745-100-01.]

(A) Except as provided in paragraphs (C), (D) and (E) of this rule, and rule 3745-100-10 of the Administrative Code, a person who owns or operates a facility or establishment which:

(1) Is in SIC code 20 through 39 as set forth in paragraph (B) of rule 3745-100-05 of the Administrative Code;

(2) Manufacturers (including imports) or processes a toxic chemical; and

(3) Sells or otherwise distributes a mixture or trade name product containing the toxic chemical to a facility described in rule 3745-100-05 of the Administrative Code, or to a person who in turn may sell or otherwise distribute such mixture or trade name product to a facility described in paragraph (B) of rule 3745-100-05 of the Administrative Code

A person who owns or operates a facility or establishment shall notify each person to whom the mixture or trade name product is sold or otherwise distributed from the facility or establishment in accordance with paragraph (B) of this rule.

(B) The notification required in paragraph (A) of this rule shall be in writing and shall include:

(1) A statement that the mixture or trade name product contains a toxic chemical subject to the reporting requirements of section 313 of Title III of the Superfund Amendments and Reauthorization Act of 1986 and 40 CFR part 372.

(2) The name of each toxic chemical, and the associated "Chemical Abstracts Service" registry number of each chemical, if applicable, as set forth in rule 3745-100-10 of the Administrative Code.

(3) The per cent by weight of each toxic chemical in the mixture or trade name product.

(C) Notification under this rule shall be provided as follows:

(1) For a mixture or trade name product containing a toxic chemical listed in rule 3745-100-10 of the Administrative Code with an effective date of January 1,

1987, the person shall provide the written notice described in paragraph (B) of this rule to each recipient of the mixture or trade name product with a least the first shipment of each mixture or trade name product to each recipient in each calendar year, beginning January 1, 1989.

(2) For a mixture or trade name product containing a toxic chemical listed in rule 3745-100-10 of the Administrative Code with an effective date of January 1, 1989 or later, the person shall provide the written notice described in paragraph (B) of this rule to each recipient of the mixture or trade name product with at least the first shipment of the mixture or trade name product to each recipient in each calendar year beginning with the applicable effective date.

(3) If a person changes a mixture or trade name product for which notification was previously provided under paragraph (B) of this rule by adding a toxic chemical, removing a toxic chemical, or changing the per cent by weight of a toxic chemical in the mixture or trade name product, the person shall provide each recipient of the changed mixture or trade name product a revised notification reflecting the change with the first shipment of the changed mixture or trade name product to the recipient.

(4) If a person discovers that a mixture or trade name product previously sold or otherwise distributed to another person during the calendar year of the discovery contains one or more toxic chemicals and that any notification provided to such other person in that calendar year for the mixture or trade name product either did not properly identify any of the toxic chemicals or did not accurately present the per cent by weight of any of the toxic chemicals in the mixture or trade name product, the person shall provide a new notification to the recipient within thirty days of the discovery which contains the information described in paragraph (B) of this rule, and identifies the prior shipments of the mixture or product in that calendar year to which the new notification applies.

(5) If a "Material Safety Data Sheet" is required to be prepared and distributed for the mixture or trade name product in accordance with 29 CFR 1910.1200, the notification must be attached to or otherwise incorporated into such "Material Safety Data Sheet." When the notification is attached to the "Material Safety Data Sheet," the notice must contain clear instructions that the notification must not be detached from the "Material Safety Data Sheet" and that any copying and redistribution of the "Material Safety Data Sheet" shall include copying and redistribution of the notice attached to copies of the "Material Safety Data Sheet" subsequently redistributed.

(D) Notifications are not required in the following instances:

(1) If a mixture or trade name product contains no toxic chemical in excess of the applicable de minimis concentration as specified in paragraph (A) of rule 3745-100-08 of the Administrative Code.

(2) If a mixture or trade name product is on of the following:

(a) An "article" as defined in rule 3745-100-01 of the Administrative Code.

(b) Foods, drugs, cosmetics, alcoholic beverages, tobacco or tobacco products packaged for distribution to the general public.

(c) Any consumer product, as the term is defined in the Consumer Product Safety Act contained in 15 U.S.C. 2051 to 2084, packaged for distribution to the general public.

(E) If the person considers the specific identity of a toxic chemical in a mixture or trade name product to be a trade secret under provisions of 29 CFR 1910.1200, the notice shall contain a generic chemical name that is descriptive of that toxic chemical.

(F) If the person considers the specific per cent by weight composition of a toxic chemical in the mixture or trade name product to be a trade secret under applicable state law or under the "Restatement of Torts," section 757, comment B, the notice must contain a statement that the chemical is present at a concentration that does not exceed a specified upper-bound concentration value: for example, a mixture contains twelve per cent of a toxic chemical. However, the supplier considers the specific concentration of the toxic chemical in the product to be a trade secret. The notice would indicate that the toxic chemical is present in the mixture in a concentration of no more than fifteen per cent by weight. The upper-bound value chosen must be no larger than necessary to adequately protect the trade secret.

(G) A person is not subject to the requirements of this rule to the extent the person does not know that the facility or establishment is selling or otherwise distributing a toxic chemical to another person in a mixture or trade name product. However, for purposes of this rule, a person has such knowledge if the person receives a notice under this rule from a supplier of a mixture or trade name product and the person in turn sells or otherwise distributes that mixture or trade name product to another person.

(H) If two or more persons who do not have any common corporate or business interest (including common ownership or control), as described in paragraph (F) of rule 3745-100-08 of the Administrative Code, operate separate establishments within a single facility, each such person shall treat the establishment it operates as a facility for purposes of this rule. The determination under paragraph (A) of this rule shall be made for those establishments.

Effective: 01/16/2006

R.C. 119.032 review dates: 10/03/2005 and 01/16/2011

CERTIFIED ELECTRONICALLY
Certification

01/04/2006
Date

Promulgated Under: 119.03
Statutory Authority: R. C. Chapter 3751.02
Rule Amplifies: R. C. Chapter 3751.02
Prior Effective Dates: 6/22/1989.

3745-100-10 **Applicable chemicals and chemical categories.**

[Comment: For dates of non-regulatory government publications, publications of recognized organizations and associations, federal rules, and federal statutory provisions referenced in this rule, see the "Incorporation by Reference" section at the end of rule 3745-100-01.]

The requirements of this chapter apply to the following chemicals and chemical categories. This rule contains three listings. Paragraph (A) of this rule is an alphabetical order listing of those chemicals that have an associated "Chemical Abstracts Service (CAS)" registry number. Paragraph (B) of this rule contains a CAS registry number order list of the same chemicals listed in paragraph (A) of this rule. Paragraph (C) of this rule contains the chemical categories for which reporting is required. These chemical categories are listed in alphabetical order and do not have CAS registry numbers.

(A) Alphabetical listing:

--

Chemical Name	CAS Number
abamectin (avermectin B1)	71751-41-2
acephate (acetylphosphoramidothioic acid o,s-dimethyl ester)	30560-19-1
acetaldehyde	75-07-0
acetamide	60-35-5
acetonitrile	75-05-8
acetophenone	98-86-2
2-acetylaminofluorene	53-96-3
acifluorfen, sodium salt (5- (2-chloro-4- (trifluoromethyl) - phenoxy)-2-nitro-benzoic acid, sodium salt)	62476-59-9
acrolein	107-02-8
acrylamide	79-06-1
acrylic acid	79-10-7
acrylonitrile	107-13-1
alachlor	15972-60-8
aldicarb	116-06-3
aldrin [1,4,5,8-dimethanonaphthalene, 1,2,3,4,10,10-hexachloro-1,4,4A,5,8,8a-hexahydro- (1 alpha, 4 alpha, 4a beta, 5 alpha, 8 alpha, 8A beta) -]	309-00-2
d-trans-allethrin [d-trans-chrysanthemic acid of d-allethrone]	28057-48-9
allyl alcohol	107-18-6
allylamine	107-11-9
allyl chloride	107-05-1
aluminum (fume or dust)	7429-90-5
aluminum phosphide	20859-73-8
aluminum oxide (fibrous forms)	1344-28-1

ametryn (n-ethyl-n'- (1-methylethyl)-6-(methylthio) -1,3,5,-triazine-2,4-diamine)	834-12-8
2-aminoanthraquinone	117-79-3
4-aminoazobenzene	60-09-3
4-aminobiphenyl	92-67-1
1-amino-2-methylanthraquinone	82-28-0
amitraz	33089-61-1
amitrole	61-82-5
ammonia (includes anhydrous ammonia and aqueous ammonia from water dissociable ammonium salts and other sources; "ten" percent of total aqueous ammonia is reportable under this listing)	7664-41-7
ammonium nitrate (solution)	6484-52-2
anilazine [4,6-dichloro-n-(2-chlorophenyl)-1,3,5-triazin-2-amine]	101-05-3
aniline	62-53-3
o-anisidine	90-04-0
p-anisidine	104-94-9
o-anisidine hydrochloride	134-29-2
anthracene	120-12-7
antimony	7440-36-0
arsenic	7440-38-2
asbestos (friable)	1332-21-4
atrazine (6-chloro-n-ethyl-n'-(1-methylethyl)-1,3,5-triazine-2,4-diamine)	1912-24-9
barium	7440-39-3
bendiocarb [2,2-dimethyl-1,3-benzodioxol-4-ol methylcarbamate]	22781-23-3
benfluralin (n-butyl-n-ethyl-2, 6-dinitro-4-(trifluoromethyl)-benzenamine)	1861-40-1
benomyl	17804-35-2
benzal chloride	98-87-3
benzamide	55-21-0
benz(a)anthracene	56-55-3
benzene	71-43-2
benzidine	92-87-5
benzo(b)fluoranthene	205-99-2
benzo(g,h,i)perylene	191-24-2
benzo(j)fluoranthene	205-82-3
benzo(k)fluoranthene	207-08-9
benzoic trichloride (benzotrichloride)	98-07-7
benzo(rst)pentaphene	189-55-9
benzo(a)phenanthrene	218-01-9
benzo(a)pyrene	50-32-8
benzoyl chloride	98-88-4
benzoyl peroxide	94-36-0
benzyl chloride	100-44-7

beryllium	7440-41-7
bifenthrin	82657-04-3
biphenyl	92-52-4
bis (2-chloroethoxy) methane	111-91-1
bis (2-chloroethyl) ether	111-44-4
bis (chloromethyl) ether	542-88-1
bis (2-chloro-1-methylethyl) ether	108-60-1
1,4-bis (methylisocyanate) cyclohexane	10347-54-3
1,3-bis (methylisocyanate) cyclohexane	38661-72-2
bis (tributyltin) oxide	56-35-9
boron trichloride	10294-34-5
boron trifluoride	7637-07-2
bromacil (5-bromo-6-methyl-3- (1-methylpropyl)-2,4- (1h,3h)-pyrimidinedione)	314-40-9
bromacil, lithium salt (2,4-(1h,3h)-pyrimidinedione, 5-bromo-6-methyl-3- (1-methylpropyl), lithium salt)	53404-19-6
bromine	7726-95-6
1-bromo-1-(bromomethyl)-1,3-propanedicarbonitrile	35691-65-7
bromochlorodifluoromethane (halon 1211)	353-59-3
bromoform (tribromomethane)	75-25-2
bromomethane (methyl bromide)	74-83-9
bromotrifluoromethane (halon 1301)	75-63-8
bromoxynil (3,5-dibromo-4-hydroxybenzonitrile)	1689-84-5
bromoxynil octanoate (octanoic acid, 2,6-dibromo-4-cyanophenyl ester)	1689-99-2
brucine	357-57-3
1,3-butadiene	106-99-0
butyl acrylate	141-32-2
n-butyl alcohol	71-36-3
sec-butyl alcohol	78-92-2
tert-butyl alcohol	75-65-0
1,2-butylene oxide	106-88-7
butyraldehyde	123-72-8
C.I. Acid Green 3	4680-78-8
C.I. Acid Red 114	6459-94-5
C.I. Basic Green 4	569-64-2
C.I. Basic Red 1	989-38-8
C.I. Direct Black 38	1937-37-7
C.I. Direct Blue 6	2602-46-2
C.I. Direct Blue 218	28407-37-6
C.I. Direct Brown 95	16071-86-6
C.I. Disperse Yellow 3	2832-40-8
C.I. Food Red 5	3761-53-3
C.I. Food Red 15	81-88-9

C.I. Solvent Orange 7	3118-97-6
C.I. Solvent Yellow 3	97-56-3
C.I. Solvent Yellow 14	842-07-9
C.I. Solvent Yellow 34 (auramine)	492-80-8
C.I. Vat Yellow 4	128-66-5
cadmium	7440-43-9
calcium cyanamide	156-62-7
captan [1h-isoindole-1,3(2h)-dione, 3a,4,7,7a-tetrahydro-2-[(trichloromethyl)thio]-]	133-06-2
carbaryl (1-naphthalenol, methylcarbamate)	63-25-2
carbofuran	1563-66-2
carbon disulfide	75-15-0
carbon tetrachloride	56-23-5
carbonyl sulfide	463-58-1
carboxin (5,6-dihydro-2-methyl-n-phenyl-1,4-oxathiin-3-carboxamide)	5234-68-4
catechol	120-80-9
chinomethionat (6-methyl-1,3-dithiolo [4,5-b] quinoxalin-2-one)	2439-01-2
chloramben (benzoic acid, 3-amino-2,5-dichloro-)	133-90-4
chlordane (4,7-methanoindan, 1,2,4,5,6,7,8,8-octachloro-2,3,3a,4,7,7a-hexahydro-)	57-74-9
chlorendic acid	115-28-6
chlorimuron ethyl (ethyl-2-[[[(4-chloro-6-methoxyprimidin-2-yl) -carbonyl] -amino]sulfonyl]benzoate)	90982-32-4
chlorine	7782-50-5
chlorine dioxide	10049-04-4
chloroacetic acid	79-11-8
2-chloroacetophenone	532-27-4
1-(3-chloroallyl)-3,5,7-triaza-1-azoniaadamantane chloride	4080-31-3
p-chloroaniline	106-47-8
chlorobenzene	108-90-7
chlorobenzilate (benzeneacetic acid,4-chloro-alpha- (4-chlorophenyl) - alpha-hydroxy-, ethyl ester)	510-15-6
1-chloro-1,1-difluoroethane (HCFC-142b)	75-68-3
chlorodifluoromethane (HCFC-22)	75-45-6
chloroethane (ethyl chloride)	75-00-3
chloroform	67-66-3
chloromethane (methyl chloride)	74-87-3
chloromethyl methyl ether	107-30-2
3-chloro-2-methyl-1-propene	563-47-3
p-chlorophenyl isocyanate	104-12-1
chloropicrin	76-06-2
chloroprene	126-99-8
3-chloropropionitrile	542-76-7

chlorotetrafluoroethane	63938-10-3
1-chloro-1,1,2,2-tetrafluoroethane (HCFC-124a)	354-25-6
2-chloro-1,1,1,2-tetrafluoroethane (HCFC-124)	2837-89-0
chlorothalonil (1,3-benzenedicarbonitrile,2,4,5,6-tetrachloro-)	1897-45-6
p-chloro-o-toluidine	95-69-2
2-chloro-1,1,1-trifluoroethane (HCFC-133a)	75-88-7
chlorotrifluoromethane (CFC-13)	75-72-9
3-chloro-1,1,1-trifluoropropane (HCFC-253fb)	460-35-5
chlorpyrifos methyl (o,o-dimethyl-o- (3,5,6-trichloro-2-pyridyl) phosphorothioate)	5598-13-0
chlorsulfuron (2-chloro-n-[[(4-methoxy-6-methyl-1,3,5-triazin-2-yl) amino]carbonyl]benzenesulfonamide)	64902-72-3
chromium	7440-47-3
cobalt	7440-48-4
copper	7440-50-8
creosote	8001-58-9
p-cresidine	120-71-8
m-cresol	108-39-4
o-cresol	95-48-7
p-cresol	106-44-5
cresol (mixed isomers)	1319-77-3
crotonaldehyde	4170-30-3
cumene	98-82-8
cumene hydroperoxide	80-15-9
cupferron (benzeneamine, N-hydroxy-N-nitroso, ammonium salt)	135-20-6
cyanazine	21725-46-2
cycloate	1134-23-2
cyclohexane	110-82-7
cyclohexanol	108-93-0
cyfluthrin (3-(2,2-dichloroethenyl) - 2,2-dimethylcyclopropanecarboxylic acid, cyano(4-fluoro-3-phenoxyphenyl) methyl ester)	68359-37-5
cyhalothrin (3- (2-chloro-3,3,3-trifluoro-1-propenyl) - 2,2-dimethylcyclopropanecarboxylic acid cyano (3-phenoxyphenyl) methyl ester)	68085-85-8
2,4-D (acetic acid, (2,4-dichlorophenoxy)-)	94-75-7
dazomet (tetrahydro-3,5-dimethyl-2h-1,3,5-thiadiazine-2-thione)	533-74-4
dazomet, sodium salt (tetrahydro-3,5-dimethyl-2h-1,3,5-thiadiazine-2-thione, ion(1-), sodium)	53404-60-7
2,4-DB	94-82-6
2,4-D butoxyethyl ester	1929-73-3
2,4-D butyl ester	94-80-4
2,4-D chlorocrotyl ester	2971-38-2
decabromodiphenyl oxide	1163-19-5

desmedipham	13684-56-5
2,4-D 2-ethylhexyl ester	1928-43-4
2,4-D 2-ethyl-4-methylpentyl ester	53404-37-8
diallate (carbamothioic acid, bis(1-methylethyl) -S- (2,3-dichloro-2-propenyl) ester)	2303-16-4
2,4-diaminoanisole	615-05-4
2,4-diaminoanisole sulfate	39156-41-7
4,4-diaminodiphenyl ether	101-80-4
diaminotoluene (mixed isomers)	25376-45-8
2,4-diaminotoluene	95-80-7
diazinon	333-41-5
diazomethane	334-88-3
dibenz(a,h)acridine	226-36-8
dibenz(a,j)acridine	224-42-0
dibenzo(a,h)anthracene	53-70-3
7h-dibenzo(c,g)carbazole	194-59-2
dibenzo(a,e)fluoranthene	5385-75-1
dibenzofuran	132-64-9
dibenzo(a,e)pyrene	192-65-4
dibenzo(a,h)pyrene	189-64-0
dibenzo(a,l)pyrene	191-30-0
1,2-dibromo-3-chloropropane (DBCP)	96-12-8
1,2-dibromoethane (ethylene dibromide)	106-93-4
2,2-dibromo-3-nitrilopropionamide	10222-01-2
dibromotetrafluoroethane (halon 2402)	124-73-2
dibutyl phthalate	84-74-2
dicamba (3,6-dichloro-2-methoxybenzoic acid)	1918-00-9
dichloran (2,6-dichloro-4-nitroaniline)	99-30-9
dichlorobenzene (mixed isomers)	25321-22-6
1,2-dichlorobenzene	95-50-1
1,3-dichlorobenzene	541-73-1
1,4-dichlorobenzene	106-46-7
3,3-dichlorobenzidine	91-94-1
3,3'-dichlorobenzidine dihydrochloride	612-83-9
3,3'-dichlorobenzidine sulfate	64969-34-2
dichlorobromomethane	75-27-4
trans-1,4-dichloro-2-butene	110-57-6
1,4-dichloro-2-butene	764-41-0
1,2-dichloro-1,1-difluoroethane (HCFC-132b)	1649-08-7
dichlorofluoromethane (CFC-12)	75-71-8
1,2-dichloroethane (ethylene dichloride)	107-06-2
1,2-dichloroethylene	540-59-0
1,1-dichloro-1-fluoroethane (HCFC-141b)	1717-00-6
dichlorofluoromethane (HCFC-21)	75-43-4

dichloromethane (methylene chloride)	75-09-2
dichloropentafluoropropane	127564-92-5
2,2-dichloro-1,1,1,3,3-pentafluoropropane (HCFC-225aa)	128903-21-9
2,3-dichloro-1,1,1,2,3-pentafluoropropane (HCFC-225ba)	422-48-0
1,2-dichloro-1,1,2,3,3-pentafluoropropane (HCFC-225bb)	422-44-6
3,3-dichloro-1,1,1,2,2-pentafluoropropane (HCFC-225ca)	422-56-0
1,3-dichloro-1,1,2,2,3-pentafluoropropane (HCFC-225cb)	507-55-1
1,1-dichloro-1,2,2,3,3-pentafluoropropane (HCFC-225cc)	13474-88-9
1,2-dichloro-1,1,3,3,3-pentafluoropropane (HCFC-225da)	431-86-7
1,3-dichloro-1,1,2,3,3-pentafluoropropane (HCFC-225ea)	136013-79-1
1,1-dichloro-1,2,3,3,3-pentafluoropropane (HCFC-225eb)	111512-56-2
dichlorophene (2,2'-methylenebis(4-chlorophenol)	97-23-4
2,4-dichlorophenol	120-83-2
1,2-dichloropropane	78-87-5
2,3-dichloropropene	78-88-6
trans-1,3-dichloropropene	10061-02-6
1,3-dichloropropylene	542-75-6
dichlorotetrafluoroethane (CFC-114)	76-14-2
dichlorotrifluoroethane	34077-87-7
2,2-dichloro-1,1,1-trifluoroethane (HCFC-123)	306-83-2
1,2-dichloro-1,1,2-trifluoroethane (HCFC-123a)	354-23-4
dichloro-1,1,2-trifluoroethane	90454-18-5
1,1-dichloro-1,2,2-trifluoroethane (HCFC-123b)	812-04-4
dichlorvos (phosphoric acid, 2, 2-dichloroethenyl dimethyl ester)	62-73-7
diclofop methyl (2-[4-(2,4-dichlorophenoxy) phenoxy] propanoic acid, methyl ester)	51338-27-3
dicofol (benzenemethanol, 4-chloro-alpha-(4-chlorophenyl) - alpha - (trichloromethyl)-)	115-32-2
dicyclopentadiene	77-73-6
diepoxybutane	1464-53-5
diethanolamine	111-42-2
diethatyl ethyl	38727-55-8
diethyldiisocyanatobenzene	134190-37-7
di (2-ethylhexyl) phthalate (DEHP)	117-81-7
diethyl sulfate	64-67-5
diflubenzuron	35367-38-5
diglycidyl resorcinol ether	101-90-6
dihydrosafrole	94-58-6
4,4'-diisocyanatodiphenyl ether	4128-73-8
2,4'-diisocyanatodiphenyl sulfide	75790-87-3
dimethipin (2,3,-dihydro-5,6-dimethyl-1,4-dithiin 1,1,4,4-tetraoxide)	55290-64-7
dimethoate	60-51-5
3,3-dimethoxybenzidine	119-90-4
3,3'-dimethoxybenzidine dihydrochloride (o-dianisidine	20325-40-0

dihydrochloride)	
3,3'-dimethoxybenzidine-4,4'-diisocyanate	91-93-0
3,3'-dimethoxybenzidine hydrochloride (o-dianisidine hydrochloride)	111984-09-9
dimethylamine	124-40-3
dimethylamine dicamba	2300-66-5
4-dimethylaminoazobenzene	60-11-7
n,n-dimethylaniline	121-69-7
7,12-dimethylbenz(a)anthracene	57-97-6
3,3'-dimethylbenzidine (o-tolidine)	119-93-7
3,3'-dimethylbenzidine dihydrochloride (o-tolidine dihydrochloride)	612-82-8
3,3'-dimethylbenzidine dihydrofluoride (o-tolidine dihydrofluoride)	41766-75-0
dimethylcarbamyl chloride	79-44-7
dimethyl chlorothiophosphate	2524-03-0
dimethyldichlorosilane	75-78-5
3,3'-dimethyl-4,4'-diphenylene diisocyanate	91-97-4
3,3'-dimethyldiphenylmethane-4,4'-diisocyanate	139-25-3
n,n-dimethylformamide	68-12-2
1,1-dimethyl hydrazine	57-14-7
2,4-dimethylphenol	105-67-9
dimethyl phthalate	131-11-3
dimethyl sulfate	77-78-1
m-dinitrobenzene	99-65-0
o-dinitrobenzene	528-29-0
p-dinitrobenzene	100-25-4
dinitrobutyl phenol (DINOSEB)	88-85-7
4,6-dinitro-o-cresol	534-52-1
2,4-dinitrophenol	51-28-5
2,4-dinitrotoluene	121-14-2
2,6-dinitrotoluene	606-20-2
dinitrotoluene (mixed isomers)	25321-14-6
dinocap	39300-45-3
1,4-dioxane	123-91-1
diphenamid	957-51-7
diphenylamine	122-39-4
1,2-diphenylhydrazine (hydrazobenzene)	122-66-7
dipotassium endothall (7-oxabicyclo (2.2.1) heptane-2,3-dicarboxylic acid, dipotassium salt)	2164-07-0
dipropyl isocinchomeronate	136-45-8
disodium cyanodithioimidocarbonate	138-93-2
2,4-D isopropyl ester	94-11-1
2,4-dithiobiuret	541-53-7
diuron	330-54-1
dodine (dodecylguanidine monoacetate)	2439-10-3

2,4-dp	120-36-5
2,4-D propylene glycol butyl ether ester	1320-18-9
2,4-D sodium salt	2702-72-9
epichlorohydrin	106-89-8
ethoprop (phosphorodithioic acid o-ethyl s,s-dipropyl ester)	13194-48-4
2-ethoxyethanol	110-80-5
ethyl acrylate	140-88-5
ethylbenzene	100-41-4
ethyl chloroformate	541-41-3
ethyl dipropylthiocarbamate (EPTC)	759-94-4
ethylene	74-85-1
ethylene glycol	107-21-1
ethyleneimine (aziridine)	151-56-4
ethylene oxide	75-21-8
ethylene thiourea	96-45-7
ethylidene dichloride	75-34-3
famphur	52-85-7
fenarimol (alpha-(2-chlorophenyl)-alpha-4-chlorophenyl) -5-pyrimidinemethanol)	60168-88-9
fenbutatin oxide (hexakis (2-methyl-2-phenylpropyl) distannoxane)	13356-08-6
fenoxaprop ethyl (2-(4-((6-chloro-2-benzoxazolylen) oxy) phenoxy) propanoic acid, ethyl ester)	66441-23-4
fenoxycarb (2- (4-phenoxy-phenoxy)-ethylcarbamic acid ethyl ester)	72490-01-8
fenpropathrin (2,2,3,3-tetramethylcyclopropane carboxylic acid cyano (3-phenoxyphenyl) methyl ester)	39515-41-8
fenthion (o,o-dimethyl o-[3-methyl-4-(methylthio) phenyl] ester, phosphorothioic acid)	55-38-9
fenvalerate (4-chloro-alpha- (1-methylethyl) benzeneacetic acid cyano (3-phenoxyphenyl) methyl ester)	51630-58-1
ferbam (tris (dimethylcarbamodithioato-s,s') iron)	14484-64-1
fluazifop butyl (2- [4- [[5-(trifluoromethyl)-2-pyridinyl] oxy]-phenoxy] propanoic acid, butyl ester)	69806-50-4
fluometuron (urea, N,N-dimethyl-N-(3- (trifluoromethyl) phenyl)-)	2164-17-2
fluorine	7782-41-4
fluorouracil (5-fluorouracil)	51-21-8
fluvalinate (n-[2-chloro-4-(trifluoromethyl) phenyl] -dl-valine(+)-cyano (3-phenoxyphenyl) methyl ester)	69409-94-5
folpet	133-07-3
fomesafen (5-(2-chloro-4-(trifluoromethyl) phenoxy) - n methylsulfonyl) -2-nitrobenzamide)	72178-02-0
formaldehyde	50-00-0
formic acid	64-18-6
freon 113 (ethane, 1,1,2-trichloro-1,2,2,-trifluoro-)	76-13-1
heptachlor (1,4,5,6,7,8,8-heptachloro-3a,4,7,7a- tetrahydro-4,7-methano-1H-indene)	76-44-8

hexachlorobenzene	118-74-1
hexachloro-1,3-butadiene	87-68-3
hexachlorocyclopentadiene	77-47-4
alpha-hexachlorocyclohexane	319-84-6
hexachloroethane	67-72-1
hexachloronaphthalene	1335-87-1
hexachlorophene	70-30-4
hexamethylene-1,6-diisocyanate	822-06-0
hexamethylphosphoramide	680-31-9
n-hexane	110-54-3
hexazinone	51235-04-2
hydramethylnon (tetrahydro-5,5-dimethyl-2 (1h) - pyrimidinone[3-[4-(trifluoromethyl) phenyl]-1-[2-[4-(trifluoromethyl) phenyl] ethenyl] -2-propenylidene] hydrazone)	67485-29-4
hydrazine	302-01-2
hydrazine sulfate	10034-93-2
hydrochloric acid (acid aerosols including mists, vapors, gas, fog, and other airborne species of any particle size)	7647-01-0
hydrogen cyanide	74-90-8
hydrogen fluoride	7664-39-3
hydrogen sulfide	7783-06-4
hydroquinone	123-31-9
imazalil (1-[2-(2,4-dichlorophenyl)-2-(2-propenyloxy)ethyl]-1h-imidazole)	35554-44-0
indeno[1,2,3-CD] pyrene	193-39-5
3-iodo-2-propynyl butylcarbamate	55406-53-6
iron pentacarbonyl	13463-40-6
isobutyraldehyde	78-84-2
isodrin	465-73-6
isofenphos (2-[[ethoxyl[(1-methylethyl)amino]phosphinothioyl]oxy] benzoic acid 1-methylethyl ester)	25311-71-1
isophorone diisocyanate	4098-71-9
isopropyl alcohol (only persons who manufacture by the strong acid process are subject, no supplier notification)	67-63-0
4,4-isopropylidenediphenol	80-05-7
isosafrole	120-58-1
lactofen (benzoic acid, (5-2-chloro-4-(trifluoromethyl)phenoxy) -2-nitro-2-ethoxy-1-methyl-2-oxoethyl ester)	77501-63-4
lead	7439-92-1
lindane (cyclohexane, 1,2,3,4,5,6-hexachloro-, (1 alpha,2 alpha,3 beta, 4 alpha, 5 alpha, 6 beta)-)	58-89-9
linuron	330-55-2
lithium carbonate	554-13-2
malathion	121-75-5

maleic anhydride	108-31-6
malononitrile	109-77-3
maneb (carbamodithioic acid, 1,2-ethanediylbis-, manganese complex)	12427-38-2
manganese	7439-96-5
mecoprop	93-65-2
2-mercaptobenzothiazole (MBT)	149-30-4
mercury	7439-97-6
merphos	150-50-5
methacrylonitrile	126-98-7
metham sodium (sodium methyldithiocarbamate)	137-42-8
methanol	67-56-1
methazole (2-(3,4-dichlorophenyl) - 4 - methyl-1,2,4-oxadiazolidine-3,5-dione)	20354-26-1
methiocarb	2032-65-7
methoxone ((4-chloro-2-methylphenoxy) acetic acid) (MCPA)	94-74-6
methoxone sodium salt ((4-chloro-2-methylphenoxy) acetate sodium salt)	3653-48-3
methoxychlor (benzene, 1,1-(2,2,2-trichloro-ethylidene)bis(4-methoxy-)	72-43-5
2-methoxyethanol	109-86-4
methyl acrylate	96-33-3
methyl tert-butyl ether	1634-04-4
methyl chlorocarbonate	79-22-1
5-methylchrysene	3697-24-3
4-methyldiphenylmethane-3,4-diisocyanate	75790-84-0
4,4-methylenebis(2-chloroaniline) (MBOCA)	101-14-4
4,4-methylenebis(N,N-dimethyl)benzenamine	101-61-1
1,1-methylene bis (4-isocyanatocyclohexane)	5124-30-1
methylene bromide	74-95-3
4,4-methylenedianiline	101-77-9
methyl hydrazine	60-34-4
methyl iodide	74-88-4
methyl isobutyl ketone	108-10-1
methyl isocyanate	624-83-9
methyl isothiocyanate (isothiocyanatomethane)	556-61-6
2-methyllactonitrile	75-86-5
methyl mercaptan	74-93-1
methyl methacrylate	80-62-6
n-methylolacrylamide	924-42-5
methyl parathion	298-00-0
2-methylpyridine	109-06-8
n-methyl-2-pyrrolidone	872-50-4
methyltrichlorosilane	75-79-6

metiram	9006-42-2
metribuzin	21087-64-9
mevinphos	7786-34-7
michler's ketone	90-94-8
molinate (1h-azepine-1-carbothioic acid, hexahydro-s-ethyl ester)	2212-67-1
molybdenum trioxide	1313-27-5
monochloropentafluoroethane (CFC-115)	76-15-3
monuron	150-68-5
mustard gas (ethane, 1,1-thiobis(2-chloro-))	505-60-2
myclobutanil (alpha-butyl-alpha- (4-chlorophenyl) - 1h-1,2,4-triazole-1-propanenitrile)	88671-89-0
nabam	142-59-6
naled	300-76-5
naphthalene	91-20-3
1,5-naphthalene diisocyanate	3173-72-6
alpha-naphthylamine	134-32-7
beta-naphthylamine	91-59-8
nickel	7440-02-0
nitrapyrin (2-chloro-6-(trichloromethyl) pyridine)	1929-82-4
nitrate compounds (water dissociable; reportable only when in aqueous solution	
nitric acid	7697-37-2
nitrilotriacetic acid	139-13-9
p-nitroaniline	100-01-6
5-nitro-o-anisidine	99-59-2
nitrobenzene	98-95-3
4-nitrobiphenyl	92-93-3
nitrofen (benzene, 2,4-dichloro-1- (4-nitrophenoxy) -)	1836-75-5
nitrogen mustard (2-chloro-n-(2-chloroethyl) -n-methylethanamine)	51-75-2
nitroglycerin	55-63-0
2-nitrophenol	88-75-5
4-nitrophenol	100-02-7
2-nitropropane	79-46-9
1-nitropyrene	5522-43-0
p-nitrosodiphenylamine	156-10-5
N,N-dimethylaniline	121-69-7
N-nitrosodi-n-butylamine	924-16-3
N-nitrosodiethylamine	55-18-5
N-nitrosodimethylamine	62-75-9
N-nitrosodiphenylamine	86-30-6
N-nitrosodi-n-propylamine	621-64-7
N-nitrosomethylvinylamine	4549-40-0
N-nitrosomorpholine	59-89-2
N-nitroso-N-ethylurea	759-73-9

N-nitroso-N-methylurea	684-93-5
N-nitrosonornicotine	16543-55-8
N-nitrosopiperidine	100-75-4
5-nitro-o-toluidine	99-55-8
norflurazon (4-chloro-5-(methylamino)-2-[3-(trifluoromethyl) phenyl]-3 (2h)-pyridazinone)	27314-13-2
octachloronaphthalene	2234-13-1
octachlorostyrene	29082-74-4
oryzalin (4-(dipropylamino)-3,5-dinitrobenzenesulfonamide)	19044-88-3
osmium tetroxide	20816-12-0
oxydemeton methyl (s- (2-(ethylsulfinyl) ethyl) o,o-dimethyl ester phosphorothioic acid)	301-12-2
oxydiazon (3-[2,4-dichloro-5-(1-methylethoxy) phenyl] - 5 - (1,1-dimethylethyl)-1,3,4-oxadiazol-2 (3h)-one)	19666-30-9
oxyfluorfen	42874-03-3
ozone	10028-15-6
paraldehyde	123-63-7
paraquat dichloride	1910-42-5
parathion (phosphorothioic acid, o,o-diethyl-o-(4-nitrophenyl) ester)	56-38-2
pebulate (butylethylcarbamothioic acid s-propyl ester)	1114-71-2
pendimethalin (n-(1-ethylpropyl)-3,4-dimethyl-2,6-dinitrobenzenamine)	40487-42-1
pentachloroethane	76-01-7
pentachlorophenol (PCP)	87-86-5
pentachlorobenzene	608-93-5
pentobarbital sodium	57-33-0
peracetic acid	79-21-0
perchloromethyl mercaptan	594-42-3
permethrin (3-(2,2-dichloroethenyl)-2,2-dimethylcyclopropane carboxylic acid, (3-phenoxyphenyl) methyl ester)	52645-53-1
phenanthrene	85-01-8
phenol	108-95-2
phenothrin (2,2-dimethyl-3-(2-methyl-1-propenyl) cyclopropanecarboxylic acid (3-phenoxyphenyl)methyl ester)	26002-80-2
1,2-phenylenediamine	95-54-5
1,3-phenylenediamine	108-45-2
p-phenylenediamine	106-50-3
1,2-phenylenediamine dihydrochloride	615-28-1
1,4-phenylenediamine dihydrochloride	624-18-0
1,3-phenylene diisocyanate	123-61-5
1,4-phenylene diisocyanate	104-49-4
2-phenylphenol	90-43-7
phenytoin	57-41-0
phosgene	75-44-5

phosphine	7803-51-2
phosphorus (yellow or white)	7723-14-0
phthalic anhydride	85-44-9
picloram	1918-02-1
picric acid	88-89-1
piperonyl butoxide	51-03-6
pirimiphos methyl (o-(2-(diethylamino) - 6 - methyl-4-pyrimidinyl)-o,o-dimethyl phosphorothioate)	29232-93-7
polychlorinated biphenyls (PCB's)	1336-36-3
polymeric diphenylmethane diisocyanate	9016-87-9
potassium bromate	7758-01-2
potassium dimethyldithiocarbamate	128-03-0
potassium n-methyldithiocarbamate	137-41-7
profenofos (o-(4-bromo-2-chlorophenyl) - o - ethyl-s-propylphosphorothioate)	41198-08-7
prometryn (n,n'-bis(1-methylethyl) - 6-methylthio-1,3,5-triazine-2,4-diamine)	7287-19-6
pronamide	23950-58-5
propachlor (2-chloro-n-(1-methylethyl)-n-phenylacetamide)	1918-16-7
propane sultone	1120-71-4
propanil (n-(3,4-dichlorophenyl) propanamide)	709-98-8
propargite	2312-35-8
propargyl alcohol	107-19-7
propetamphos (3-[(ethylamino)methoxyphosphinothioyl]oxy] -2-butenoic acid, 1-methylethyl ester)	31218-83-4
propiconazole (1-[2-(2,4-dichlorophenyl)-4-propyl-1, 3-dioxolan-2-yl]-methyl-1h-1,2,4,-triazole)	60207-90-1
beta-propiolactone	57-57-8
propionaldehyde	123-38-6
propoxur (phenol, 2-(1-methylethoxy)-, methylcarbamate)	114-26-1
propylene (propene)	115-07-1
propyleneimine	75-55-8
propylene oxide	75-56-9
pyridine	110-86-1
quinoline	91-22-5
quinone	106-51-4
quintozene (pentachloronitrobenzene)	82-68-8
quizalofop-ethyl (2- [4-[(6-chloro-2-quinoxalinyl) oxy] phenoxy] propanoic acid ethyl ester)	76578-14-8
resmethrin ([5- (phenylmethyl) -3-furanyl] methyl-2, 2-dimethyl-3-(2-methyl-1-propenyl) cyclopropanecarboxylate])	10453-86-8
saccharin (only persons who manufacture are subject, no supplier notification) (1,2-benzisothiazol-3 (2H) -one,1,1-dioxide)	81-07-2
safrole	94-59-7

selenium	7782-49-2
sethoxydim (2-[1-(ethoxyimino) butyl] - 5-[2-(ethylthio) propyl]-3-hydroxyl-2-cyclohexen-1-one)	74051-80-2
silver	7440-22-4
simazine	122-34-9
sodium azide	26628-22-8
sodium dicamba (3,6-dichloro-2-methoxybenzoic acid, sodium salt)	1982-69-0
sodium dimethyldithiocarbamate	128-04-1
sodium fluoroacetate	62-74-8
sodium nitrite	7632-00-0
sodium pentachlorophenate	131-52-2
sodium o-phenylphenoxide	132-27-4
strychnine and salts	
styrene	100-42-5
styrene oxide	96-09-3
sulfuric acid (acid aerosols including mists, vapors, gas, fog, and other airborne species of any particle size)	7664-93-9
sulfuryl fluoride (vikane)	2699-79-8
sulprofos (o-ethyl o-[4-(methylthio)phenyl] phosphorodithioic acid s-propyl ester)	35400-43-2
tebuthiuron (n-[5-(1,1-dimethylethyl) - 1,3,4-thiadiazol-2-yl] -n,n'-dimethylurea)	34014-18-1
temephos	3383-96-8
terbacil (5-chloro-3-(1,1-dimethylethyl) -6-methyl-2,4(1h,3h) -pyrimidinedione)	5902-51-2
1,1,1,2-tetrachloroethane	630-20-6
1,1,2,2-tetrachloroethane	79-34-5
1,1,2,2-tetrachloro-1-fluoroethane (HCFC-121)	354-14-3
1,1,1,2-tetrachloro-2-fluoroethane (HCFC-121a)	354-11-0
tetrabromobisphenol a	79-94-7
tetrachloroethylene (perchloroethylene)	127-18-4
tetrachlorvinphos (phosphoric acid, 2-chloro-1- (2,4,5-trichlorophenyl) ethenyl dimethyl ester)	961-11-5
tetracycline hydrochloride	64-75-5
tetramethrin (2,2-dimethyl-3-(2-methyl-1-propenyl) cyclopropanecarboxylic acid (1,3,4,5,6,7-hexahydro-1,3-dioxo- 2h-isoindol-2-yl) methyl ester)	7696-12-0
thallium	7440-28-0
thiabendazole (2-(4-thiazolyl)-1h-benzimidazole)	148-79-8
thioacetamide	62-55-5
thiobencarb (carbamic acid, diethylthio-,s- (p-chlorobenzyl) ester)	28249-77-6
4,4'-thiodianiline	139-65-1
thiodicarb	59669-26-0
thiophanate ethyl ([1,2-phenylenebis (iminocarbonothioyl)] biscarbamic acid diethyl ester)	23564-06-9

thiophanate-methyl	23564-05-8
thiosemicarbazide	79-19-6
thiourea	62-56-6
thiram	137-26-8
thorium dioxide	1314-20-1
titanium tetrachloride	7550-45-0
toluene	108-88-3
toluene-2,4-diisocyanate	584-84-9
toluene-2,6-diisocyanate	91-08-7
toluenediisocyanate (mixed isomers)	26471-62-5
o-toluidine	95-53-4
o-toluidine hydrochloride	636-21-5
toxaphene	8001-35-2
triadimefon (1-(4-chlorophenoxy) -3,3-dimethyl-1- (1h-1,2,4-triazol-1-yl) - 2-butanone)	43121-43-3
triallate	2303-17-5
triaziquone (2,5-cyclohexadiene-1,4-dione,2,3,5-tris(1-aziridinyl)-)	68-76-8
tribenuron methyl (2-(((((4-methoxy-6-methyl-1,3,5-triazin-2-yl) -methylamino) carbonyl)amino) sulfonyl) -, methyl ester)	101200-048-0
tributyltin fluoride	1983-10-4
tributyltin methacrylate	2155-70-6
s,s,s-tributyltrithiophosphate (DEF)	78-48-8
trichlorfon (phosphonic acid, (2,2,2-trichloro-1-hydroxyethyl)-,dimethyl ester)	52-68-6
trichloroacetyl chloride	76-02-8
1,2,4-trichlorobenzene	120-82-1
1,1,1-trichloroethane (methyl chloroform)	71-55-6
1,1,2-trichloroethane	79-00-5
trichloroethylene	79-01-6
trichlorofluoromethane (CFC-11)	75-69-4
2,4,5-trichlorophenol	95-95-4
2,4,6-trichlorophenol	88-06-2
1,2,3-trichloropropane	96-18-4
triclopyr triethylammonium salt	57213-69-1
triethylamine	121-44-8
trifluralin (benezeneamine, 2,6-dinitro-n,n-dipropyl-4-(trifluoromethyl)-)	1582-09-8
triforine (n,n'-[1,4-piperazinediylbis(2,2,2-trichloroethylidene)] bisformamide)	26644-46-2
1,2,4-trimethylbenzene	95-63-6
trimethylchlorosilane	75-77-4
2,2,4-trimethylhexamethylene diisocyanate	16938-22-0
2,4,4-trimethylhexamethylene diisocyanate	15646-96-5
2,3,5-trimethylphenyl methylcarbamate	2655-15-4

triphenyltin chloride	639-58-7
triphenyltin hydroxide	76-87-9
tris(2,3-dibromopropyl) phosphate	126-72-7
trypan blue	72-57-1
urethane (ethyl carbamate)	51-79-6
vanadium (except when contained in an alloy)	7440-62-2
vinclozolin (3-(3,5-dichlorophenyl) - 5 - ethenyl-5-methyl-2,4-oxazolidinedione)	50471-44-8
vinyl acetate	108-05-4
vinyl bromide	593-60-2
vinyl chloride	75-01-4
vinylidene chloride	75-35-4
xylene (mixed isomers)	1330-20-7
m-xylene	108-38-3
o-xylene	95-47-6
p-xylene	106-42-3
2,6-xylidine	87-62-7
zinc (fume or dust)	7440-66-6
zineb [carbamodithioic acid, 1,2-ethanediylbis-, zinc complex]	12122-67-7

(B) CAS number listing

--

CAS Number	Chemical Name
50-00-0	formaldehyde
51-03-6	piperonyl butoxide
51-28-5	2,4-dinitrophenol
51-75-2	nitrogen mustard (2-chloro-N-(2-chloroethyl) -N-methylethanamine)
51-79-6	urethane (ethyl carbamate)
52-68-6	trichlorfon (phosphonic acid, (2,2, 2-trichloro-1-hydroxyethyl) -dimethyl ester)
52-85-7	famphur
53-96-3	2-acetylaminofluorene
55-18-5	N-nitrosodiethylamine
55-21-0	benzamide
55-38-9	fenthion (o,o-dimethyl o(3methyl-4-(methylthio) phenyl) ester, phosphoric acid)
55-63-0	nitroglycerin
56-23-5	carbon tetrachloride
56-35-9	bis (tributyltin) oxide
56-38-2	parathion (phosphorothioic acid, o-o-diethyl-o- (4-nitrophenyl)ester)
57-14-7	1,1-dimethyl hydrazine
57-33-0	pentobarbital sodium
57-41-0	phenytoin

57-57-8	beta-propiolactone
57-74-9	chlordane (4,7-methanoindan, 1,2,4,5,6,7,8,8-octachloro-2, 3,3a,4,7,7a-hexahydro-)
58-89-9	lindane (cyclohexane, 1,2,3,4,5,6-hexachlor-(1 alpha, 2 alpha, 3 beta, 4 alpha, 5 alpha, 6 beta-)-)
59-89-2	N-nitrosomorpholine
60-09-3	4-aminoazobenzene
60-11-7	4-dimethylaminoazobenzene
60-34-4	methyl hydrazine
60-35-5	acetamide
60-51-5	dimethoate
61-82-5	amitrole
62-53-3	aniline
62-55-5	thioacetamide
62-56-6	thiourea
62-73-7	dichlorvos (phosphoric acid, 2,2-dichloroethenyl dimethyl ester)
62-74-8	sodium fluoroacetate
62-75-9	N-nitrosodimethylamine
63-25-2	carbaryl (1-naphthalenol, methylcarbamate)
64-18-6	formic acid
64-67-5	diethyl sulfate
64-75-5	tetracycline hydrochloride
67-56-1	methanol
67-63-0	isopropyl alcohol (only persons who manufacture by the strong acid process are subject, no supplier notification)
67-66-3	chloroform
67-72-1	hexachloroethane
68-12-2	n,n-dimethylformamide
68-76-8	triaziquone (2,5-cyclohexadiene-1,4-dione, n-butyl alcohol 2,3,5-tris(1-aziridinyl)-)
70-30-4	hexachlorophene
71-36-3	n-butyl alcohol
71-43-2	benzene
71-55-6	1,1,1-trichloroethane (methyl chloroform)
72-43-5	methoxychlor (benzene, 1,1-(2,2,2 trichloro-ethylidene) bis(4-methoxy-)
72-57-1	trypan blue
74-83-9	bromomethane (methyl bromide)
74-85-1	ethylene
74-87-3	chloromethane (methyl chloride)
74-88-4	methyl iodide
74-90-8	hydrogen cyanide
74-95-3	methylene bromide
75-00-3	chloroethane (ethyl chloride)

75-01-4	vinyl chloride
75-05-8	acetonitrile
75-07-0	acetaldehyde
75-09-2	dichloromethane (methylene chloride)
75-15-0	carbon disulfide
75-21-8	ethylene oxide
75-25-2	bromoform (tribromomethane)
75-27-4	dichlorobromomethane
75-34-3	ethylidene dichloride
75-35-4	vinylidene chloride
75-43-4	dichlorofluoromethane (HCFC-21)
75-44-5	phosgene
75-45-6	chlorodifluoromethane (HCFC-22)
75-55-8	propyleneimine
75-56-9	propylene oxide
75-63-8	bromotrifluoromethane (halon 1301)
75-65-0	tert-butyl alcohol
75-68-3	1-chloro-1,1-difluoroethane (HCFC-142b)
75-69-4	trichlorofluoromethane (CFC-11)
75-71-8	dichlorodifluoromethane (CFC-12)
75-72-9	chlorotrifluoromethane (CFC-13)
75-86-5	2-methyllactonitrile
75-88-7	2-chloro-1,1,1-trifluoroethane (HCFC-133a)
76-01-7	pentachloroethane
76-02-8	trichloroacetyl chloride
76-06-2	chloropicrin
76-13-1	freon 113 (ethane, 1,1,2-trichloro-1,2,2-trifluoro-)
76-14-2	dichlorotetrafluoroethane (CFC-114)
76-15-3	monochloropentafluoroethane (CFC-115)
76-44-8	heptachlor (1,4,5,6,7,8,8-heptachloro- 3A, 4,7,7a-tetrahydro-4,7-methano-1H-indene)
76-87-9	triphenyltin hydroxide
77-47-4	hexachlorocyclopentadiene
77-73-6	dicyclopentadiene
77-78-1	dimethyl sulfate
77-48-8	s,s,s-tributyltrithiophosphate (DEF)
78-84-2	isobutyraldehyde
78-87-5	1,2-dichloropropane
78-88-6	2,3-dichloropropene
78-92-2	sec-butyl alcohol
79-00-5	1,1,2-trichloroethane
79-01-6	trichloroethylene
79-06-1	acrylamide
79-10-7	acrylic acid

79-11-8	chloroacetic acid
79-19-6	thiosemicarbazide
79-21-0	peracetic acid
79-22-1	methyl chlorocarbonate
79-34-5	1,1,2,2-tetrachloroethane
79-44-7	dimethylcarbamyl chloride
79-46-9	2-nitropropane
79-94-7	tetrabromodisphenol a
80-05-7	4,4-isopropylidenediphenol
80-15-9	cumene hydroperoxide
80-62-6	methyl methacrylate
81-07-2	saccharin (only persons who manufacture are subject, no supplier notification) (1,2-benzisothiazol-3 (2H)-one,1,1-dioxide)
81-88-9	C.I. Food Red 15
82-28-0	1-amino-2-methylanthraquinone
82-68-8	quintozene (pentachloronitrobenzene)
84-74-2	dibutyl phthalate
85-01-8	phenanthrene
85-44-9	phthalic anhydride
86-30-6	N-nitrosodiphenylamine
87-62-7	2,6-xylidine
87-68-3	hexachloro-1,3-butadiene
87-86-5	pentachlorophenol (PCP)
88-06-2	2,4,6-trichlorophenol
88-75-5	2-nitrophenol
88-85-7	dinitrobutyl phenol (dinoseb)
88-89-1	picric acid
90-04-0	o-anisidine
90-43-7	2-phenylphenol
90-94-8	michler's ketone
91-08-7	toluene-2,6-diisocyanate
91-20-3	naphthalene
91-22-5	quinoline
91-59-8	beta-naphthylamine
91-94-1	3,3-dichlorobenzidine
92-52-4	biphenyl
92-67-1	4-aminobiphenyl
92-87-5	benzidine
92-93-3	4-nitrobiphenyl
93-65-2	mecoprop
94-11-1	2,4-D isopropyl ester
94-36-0	benzoyl peroxide
94-58-6	dihydrosafrole
94-59-7	safrole

94-74-6	methoxone ((4-chloro-2methylphenoxy) acetic acid) (MCPA)
94-75-7	2,4-D (acetic acid, (2,4-dichlorophenoxy)-)
94-80-4	2,4-D butyl ester
94-82-6	2,4-DB
95-47-6	o-xylene
95-48-7	o-cresol
95-50-1	1,2-dichlorobenzene
95-53-4	o-toluidine
95-54-5	1,2-phenylenediamine
95-63-6	1,2,4-trimethylbenzene
95-69-2	p-chloro-o-toluidine
95-80-7	2,4-diaminotoluene
95-95-4	2,4,5-trichlorophenol
96-09-3	styrene oxide
96-12-8	1,2-dibromo-3-chloropropane (DBCP)
96-18-4	1,2,3-trichloropropane
96-33-3	methyl acrylate
96-45-7	ethylene thiourea
96-23-4	dichlorophene (2,2'-methylenebis(4-chlorophenol))
97-56-3	C.I. Solvent Yellow 3
98-07-7	benzoic trichloride (benzotrichlonde)
98-82-8	cumene
98-86-2	acetophenone
98-87-3	benzal chloride
98-88-4	benzoyl chloride
98-95-3	nitrobenzene
99-30-9	dichloran (2,6-dichloro-4-nitroaniline)
99-55-8	5-nitro-o-toluidine
99-59-2	5-nitro-o-anisidine
99-65-0	m-dinitrobenzene
100-01-6	p-nitroaniline
100-02-7	4-nitrophenol
100-25-4	p-dinitrobenzene
100-41-4	ethylbenzene
100-42-5	styrene
100-44-7	benzyl chloride
100-75-4	N-nitrosopiperidine
101-05-3	anilazine (4,6-dichloro-n-(2-chlorophenyl) -1,3,5-triazin-2-amine)
101-14-4	4,4-methylenebis (2-chloroaniline) (MBOCA)
101-61-1	4,4-methylenebis (N,N-dimethyl) benzenamine
101-77-9	4,4-methylenedianiline
101-80-4	4,4-diaminodiphenyl ether
101-90-6	diglycidyl resorcinol ether
104-12-1	p-chlorophenyl isocyanate

104-94-9	p-anisidine
105-67-9	2,4-dimethylphenol
106-42-3	p-xylene
106-44-5	p-cresol
106-46-7	1,4-dichlorobenzene
106-47-8	p-chloroaniline
106-50-3	p-phenylenediamine
106-51-4	quinone
106-88-7	1,2-butylene oxide
106-89-8	epichlorohydrin
106-93-4	1,2-dibromoethane (ethylene dibromide)
106-99-0	1,3-butadiene
107-02-8	acrolein
107-05-1	allyl chloride
107-06-2	1,2-dichloroethane (ethylene dichloride)
107-11-9	allylamine
107-13-1	acrylonitrile
107-18-6	allyl alcohol
107-19-7	propargyl alcohol
107-21-1	ethylene glycol
107-30-2	chloromethyl methyl ether
108-05-4	vinyl acetate
108-10-1	methyl isobutyl ketone
108-31-6	maleic anhydride
108-38-3	m-xylene
108-39-4	m-cresol
108-45-2	1,3-phenylenediamine
108-60-1	bis(2-chloro-1-methylethyl) ether
108-88-3	toluene
108-90-7	chlorobenzene
108-93-0	cyclohexanol
108-95-2	phenol
109-06-8	2-methylpyridine
109-77-3	malononitrile
109-86-4	2-methoxylethanol
110-54-3	n-hexane
110-57-6	trans-1,4-dichloro-2-butene
110-80-5	2-ethoxyethanol
110-82-7	cyclohexane
110-86-1	pyridine
111-42-2	diethanolamine
111-44-4	bis (2-chloroethyl) ether
111-91-1	bis (2-chloroethoxy) methane
114-26-1	propoxur (phenol, 2-(1-methylethoxy), methylcarbamate)

115-07-1	propylene (propene)
115-28-6	chlorendic acid
115-32-2	dicofol (benzenemethanol, 4-chloro-alpha- (4-chlorophenyl) - alpha - (trichloromethyl)-)
116-06-3	aldicarb
117-79-3	2-aminoanthraquinone
117-81-7	di-(2-ethylhexyl) phthalate (DEHP)
118-74-1	hexachlorobenzene
119-90-4	3,3-dimethoxybenzidine
119-93-7	3,3-dimethylbenzidine (o-tolidine)
120-12-7	anthracene
120-36-5	2, 4-DP
120-58-1	isosafrole
120-71-8	p-cresidine
120-80-9	catechol
120-82-1	1,2,4-trichlorobenzene
120-83-2	2,4-dichlorophenol
121-14-2	2,4-dinitrotoluene
121-44-8	triethyllamine
121-69-7	N,N-dimethylaniline
121-75-5	malathion
122-34-9	simazine
122-39-4	diphenylamine
122-66-7	1,2-diphenylhydrazine (hydrazobenzene)
123-31-9	hydroquinone
123-38-6	propionaldehyde
123-63-7	paraldehyde
123-72-8	butyraldehyde
123-91-1	1,4-dioxane
124-40-3	dimethyllamine
124-73-2	dibromotetrafluoroethane (halon 2402)
126-72-7	tris (2,3-dibromopropyl) phosphate
126-98-7	methacrylonitrile
126-99-8	chloroprene
127-18-4	tetrachloroethylene (perchloroethylene)
128-03-0	potassium dimethyldithiocarbamate
128-04-1	sodium dimethyldithiocarbmate
128-66-5	C.I. Vat Yellow 4
131-11-3	dimethyl phthalate
131-52-2	sodium pentachlorophenate
132-27-4	sodium o-phenylphenoxide
132-64-9	dibenzofuran
133-06-2	captan (1H-isoindole-1,3 (2H) -dione, 3a,4,7,7a- tetrahydro-2[(trichloromethyl) thio]-)

133-07-3	folpet
133-90-4	chloramben (benzoic acid, 3-amino- 2,5,-dichloro-)
134-29-2	o-anisidine hydrochloride
134-32-7	alpha-naphthylamine
135-20-6	cupferron (benzeneamine, N-hydroxy-N-nitroso, ammonium salt)
136-45-8	dipropyl isocinchomeronate
137-26-8	thiram
137-41-7	potassium n-methyldithio-carbamate
137-42-8	metham sodium (sodium methyldithiocarbamate)
138-93-2	disodium cyanodithioimido-carbonate
139-13-9	nitrilotriacetic acid
139-65-1	4,4-thiodianiline
140-88-5	ethyl acrylate
141-32-2	butyl acrylate
142-59-6	nabam
148-79-8	thiabendazole (2-(4-thiazolyl) -1h-benzimidazole)
149-30-4	2-mercaptobenzothiazole (MBT)
150-50-5	merphos
150-68-5	monuron
151-56-4	ethyleneimine (aziridine)
156-10-5	p-nitrosodiphenylamine
156-62-7	calcium cyanamide
191-24-2	benzo (g,h,i) perylene
298-00-0	methyl parathion
300-76-5	naled
301-12-2	oxydemeton metheyl (s-(2-(ethylsulfinyl) ethyl)o,o-dimethyl ester phosphorothioic acid)
302-01-2	hydrazine
306-83-2	2,2-dichloro-1,1,1-trifluoroethane (HCFC-123)
309-00-2	aldrin (1,4,5,8-dimethanonaphthalene, 1,2,3,4,10,10-hexachloro-1,4,4a,5,8,8a- hexahydro- (1 alpha, 4 alpha, 4a beta, 5 alpha, 8 alpha, 8a beta)-)
314-40-9	bromacil (5-bromo-6-methyl-3- (1-methyl-propyl)2,4-(1h,3h)-pyrimidine-dione
319-84-6	alpha-hexachlorocyclohexane
330-54-1	diuron
330-55-2	linuron
333-41-5	diazinon
334-88-3	diazomethane
353-59-3	bromochlorodifluoromethane (halon 1211)
354-11-0	1,1,1,2-tetrachloro-2-fluoroethane (HCFC-121a)
354-14-3	1,1,2,2-tetrachloro-1-fluoroethane (HCFC-121)
354-23-4	1,2-dichloro-1,1,2-trifluoroethane (HCFC-123a)
354-25-6	1-chloro-1,1,2,2-tetrafluoroethane (HCFC-124a)

357-57-3	brucine
422-44-6	1,2-dichloro-1,1,2,3,3-pentafluoropropane (HCFC-225bb)
422-48-0	2,3-dichloro-1,1,1,2,3-pentafluoropropane (HCFC-225ba)
422-56-0	3,3-dichloro-1,1,1,2,2-pentafluoropropane (HCFC-225ca)
431-86-7	1,2-dichloro-1,1,3,3,3-pentafluoropropane (HCFC-225da)
460-35-5	3-chloro-1,1,1-trifluoropropane (HCFC-253fb)
463-58-1	carbonyl sulfide
465-73-6	isodrin
492-80-8	C.I. Solvent Yellow 34 (aurimine)
505-60-2	mustard gas (ethane, 1,1-thiobis (2-chloro-))
507-55-1	1,3-dichloro-1,1,2,2,3-pentafluoropropane (HCFC-225cb)
510-15-6	chlorobenzilate (benzeneacetic acid, 4-chloro-alpha(4-chlorophenyl) -alpha-hydroxy-ethyl ester)
528-29-0	o-dinitrobenzene
532-27-4	2-chloroacetophenone
533-74-4	dazomet (tetrahydro-3, 5-dimethyl-2h-1,3,5-thiadiazine-2-thione)
534-52-1	4,6-dinitro-o-cresol
540-59-0	1,2-dichlorethylene
541-41-3	ethyl chloroformate
541-53-7	2,4-dithiobiuret
541-73-1	1,3-dichlorobenzene
542-75-6	1,3-dichloropropylene
542-76-7	3-chloropropionitrile
542-88-1	bis(chloromethyl)ether
554-13-2	lithium carbonate
556-61-6	methyl isothiocyanate (isothiocyanatomethane)
563-47-3	3-chloro-2-methyl-1-propene
569-64-2	C.I. Basic Green 4
584-84-9	toluene-2,4-diisocyanate
593-60-2	vinyl bromide
594-42-3	perchloromethyl mercaptan
606-20-2	2,6-dinitrotoluene
608-93-5	pentachlorobenzene
612-82-8	3,3'-dimethylbenzidine dihydrochloride (o-tolidine dihydrochloride)
612-83-9	3,3'-dichlorobenzidine dihydrochloride
615-05-4	2,4-diaminoanisole
615-28-1	1,2-phenylenediamine dihydrochloride
621-64-7	N-nitrosodi-n-propylamine
624-18-0	1,4-phenylenediamine dihydrochloride
624-83-9	methyl isocyanate
630-20-6	1,1,1,2-tetrachlorethane
636-21-5	o-toluidine hydrochloride
639-58-7	triphenyltin chloride
680-31-9	hexamethylphosphoramide

684-93-5	N-nitroso-N-methylurea
709-98-8	propanil (n-(3,4-dichlorophenyl) propanamide)
759-73-9	N-nitroso-N-ethylurea
759-94-4	ethyl dipropylthiocarbamate (EPTC)
764-41-0	1,4-dichloro-2-butene
812-04-4	1,1-dichloro-1,2,2-trifluoroethane (HCFC-123b)
834-12-8	ametryn (n-ethyl-n'-(1-methylethyl) - 6 - (methylthio) - 1,3,5,-triazine-2, 4-diamine)
842-07-9	C.I. Solvent Yellow 14
872-50-4	n-methyl-2-pyrrolidone
924-16-3	N-nitrosodi-n-butylamine
924-42-5	n-methylolacrylamide
957-51-7	diphenamid
961-11-5	tetrachlorvinphos (phosphoric acid, 2-chloro-1-(2,4,5,-trichlorophenyl) ethenyl dimethyl ester)
989-38-8	C.I. Basic Red 1
1114-71-2	pebulate (butylethylcarbamothioic acid s-propyl ester)
1120-71-4	propane sultone
1134-23-2	cycloate
1163-19-5	decabromodiphenyl oxide
1313-27-5	molybdenum trioxide
1314-20-1	thorium dioxide
1319-77-3	cresol (mixed isomers)
1320-18-9	2,4-D propylene glycol butyl ether ester
1330-20-7	xylene (mixed isomers)
1332-21-4	asbestos (friable)
1335-87-1	hexachloronaphthalene
1336-36-3	polychlorinated biphenyls (PCB's)
1344-28-1	aluminum oxide (fibrous forms)
1464-53-5	diepoxybutane
1563-66-2	carbofuran
1582-09-8	trifluralin (benzeneamine,2,6-dinitro-N,N-dipropyl-4,(trifluoromethyl)-)
1634-04-4	methyl tert-butyl ether
1649-08-7	1,2-dichloro-1,1-difluoroethane (HCFC-132b)
1689-84-5	bromoxynil (3,5-dibromo-4-hydroxybenzonitrile)
1689-99-2	bromoxynil octanoate (octanoic acid, 2,6-dibromo-4-cyanophenyl ester)
1717-00-6	1,1-dichloro-1-fluoroethane (HCFC-141b)
1836-75-5	nitrofen (benzene,2,4-dichloro-1-(4-nitrophenoxy)-)
1861-40-1	benfluralin (n-butyl-n-ethyl-2,6-dinitro-4-(trifluoromethyl) benzenamine)
1897-45-6	chlorothalonil (1,3-benzenedicarbo-nitrile,2,4,5,6-tetrachloro-)
1910-42-5	paraquat dichloride

1912-24-9	atrazine (6-chloro-n-ethyl-n'-(1-methyl-ethyl) - 1,3,5-triazine-2, 4-diamine)
1918-00-9	dicamba (3,6-dichloro-2-methoxybenzoic acid)
1918-02-1	picloram
1918-16-7	propachlor (2-chloro-n-(1-methylethyl)-n-phenylacetamide)
1928-43-4	2,4-d 2-ethylhexyl ester
1929-73-3	2,4-d butoxyethyl ester
1929-82-4	nitrapyrin (2-chloro-6-(trichloromethyl)-pyridine)
1937-37-7	C.I. Direct Black 38
1982-69-0	sodium dicamba (3,6-dichloro-2-methoxybenzoic acid, sodium salt)
1983-10-4	tributyltin fluoride
2032-65-7	methiocarb
2155-70-6	tributyltin methacrylate
2164-07-0	dipotassium endothall (7-oxabicyclo(2.2.1)heptane-2,3-dicarboxylic acid, dipotassium salt)
2164-17-2	fluometuron (urea,N,N-dimethyl-N (3-(trifluoromethyl phenyl)-)
2212-67-1	molinate (1h-azepine-1-carbothioic acid, hexahydro-s-ethyl ester)
2234-13-1	octachloronaphthalene
2300-66-5	dimethylamine dicamba
2303-16-4	diallate (carbamothioic acid, bis (1-methylethyl) - S - (2,3-dichloro-2-propenyl) ester)
2303-17-5	triallate
2312-35-8	propargite
2439-01-2	chinomethionat (6-methyl-1,3-dithiolo(4,5-b)-quinoxalin-2-one)
2439-10-3	dodine (dodecylquanidine monoacetate)
2524-03-0	dimethyl chlorothiophosphate
2602-46-2	C.I. Direct Blue 6
2655-15-4	2,3,5-trimethylphenyl methyl carbamate
2699-79-8	sulfuryl fluoride (vikane)
2702-72-9	2,4-D sodium salt
2832-40-8	C.I. Disperse Yellow 3
2837-89-0	2-chloro-1,1,1,2-tetrafluoroethane (HCFC-124)
2971-38-2	2,4-D chlorocrotyl ester
3118-97-6	C.I. Solvent Orange 7
3383-96-8	temephos
3653-48-3	methoxone sodium salt ((4-chloro-2-methylphenoxy) acetate sodium salt)
3761-53-3	C.I. Food Red 5
4080-31-3	1-(3-chloroallyl)-3,5,7-triaza-1-azoniaadamantane chloride
4170-30-3	crotonaldehyde
4549-40-0	N-nitrosomethylvinylamine
4680-78-8	C.I. Acid Green 3
5234-68-4	carboxin (5,6-dihydro-2-methyl-n-phenyl-1,4-oxathiin-3-carboxamide)

5598-13-0	chlorpyrifos methyl (o,o-dimethyl-o-(3,5,6-trichloro-2-pyridyl) phosphorothioate)
5902-51-2	terbacil (5-chloro-3-(1,1-dimethylethyl) - 6 - methyl-2,4(1h,3h) - pyrimidinedione)
6459-94-5	C.I. Acid red 114
7287-19-6	prometryn (n,n'-bis(1-methylethyl) - 6-methylthio-1,3,5-triazine-2,4-diamine)
7429-90-5	aluminum (fume or dust)
7439-92-1	lead
7439-96-5	manganese
7439-97-6	mercury
7440-02-0	nickel
7440-22-4	silver
7440-28-0	thallium
7440-36-0	antimony
7440-38-2	arsenic
7440-39-3	barium
7440-41-7	beryllium
7440-43-9	cadmium
7440-47-3	chromium
7440-48-4	cobalt
7440-50-8	copper
7440-62-2	vanadium (except when contained in an alloy)
7440-66-6	zinc (fume or dust)
7550-45-0	titanium tetrachloride
7632-00-0	sodium nitrite
7637-07-2	boron trifluoride
7647-01-0	hydrochloric acid (acid aerosols including mists, vapors, gas, fog, and other airborne species of any particle size)
7664-39-3	hydrogen fluoride
7664-41-7	ammonia (includes anhydrous ammonia and aqueous ammonia from water dissociable ammonium salts and other sources; "ten" percent of total aqueous ammonia is reportable under this listing)
7664-93-9	sulfuric acid (acid aerosols including mists, vapors, gas, fog, and other airborne species of any particle size)
7696-12-0	tetramethrin (2,2-dimethyl-3- (2-methyl-1-1propenyl (cyclopropanecarboxylic acid (1,3,4,5,6,7-hexahydro-1,3-dioxo-2h-isoindol-2-yl) methyl ester)
7697-37-2	nitric acid
7723-14-0	phosphorus (yellow or white)
7726-95-6	bromine
7758-01-2	potassium bromate
7782-41-4	fluorine
7782-49-2	selenium
7782-50-5	chlorine

7786-34-7	mevinphos
7803-51-2	phosphine
8001-35-2	toxaphene
8001-58-9	creosote
9006-42-2	metiram
10028-15-6	ozone
10034-93-2	hydrazine sulfate
10049-04-4	chlorine dioxide
10061-02-6	trans-1,3-dichloropropene
10294-34-5	boron trichloride
10453-86-8	resmethrin ((5-(phenylmethyl) - 3 - furanyl) methyl-2,2-dimethyl-3-(2-methyl-1-propenyl) cyclopropanecarboxylate))
12122-67-7	zineb (carbamodithioic acid, 1,2-ethanediylbis, zinc complex)
12427-38-2	maneb (carbamodithioic acid, 1,2-ethanediylbis-, manganese complex)
13194-48-4	ethoprop (phosphorodithioic acid o-ethyl s,s-dipropyl ester)
13356-08-6	fenbutatin oxide (hexakis(2-methyl-2-phenylpropyl)distannoxane)
13463-40-6	iron pentacarbonyl
13474-88-9	1,1-dichloro-1,2,2,3,3-pentafluoropropane (HCFC-225cc)
13684-56-5	desmedipham
14484-64-1	ferbam (tris(dimethylcarbamodithioato-s,s') iron)
15972-60-8	alachlor
16071-86-6	C.I. Direct Brown 95
16543-55-8	N-nitrosonornicotine
17804-35-2	benomyl
19044-88-3	oryzalin (4-(dipropylamino)-3,5-dinitrobenzenesulfonamide)
19666-30-9	oxydiazon (3-(2,4-dichloro-5(1-methyl-ethoxy)phenyl) - 5 - (1,1-dimethyl-ethyl)-1,3,4-oxadiazol-2(3h)-one)
20325-40-0	3,3'-dimethoxybenzidine dihydrochlorine(o-dianisidine dihydrochlorine)
20354-26-1	methazole (2-(3,4-dichlorophenyl) - 4 - methyl-1,2,4-oxadiazolidine-3,5-dione
20816-12-0	osmium tetroxide
20859-73-8	aliminum phosphide
21087-64-9	metribuzin
21725-46-2	cyanazine
22781-23-3	bendiocarb (2,2-dimethyl-1,3-benzodioxol-4-ol methylcarbmate)
23564-05-8	thiophanatemethyl
23564-06-9	thiophanate ethyl ((1,2-phenylenebis-(iminocarbonothioyl)) biscarbamic acid diethyl ester)
23950-58-5	pronamide
25311-71-1	isofenphos (2-((ethoxyl((1-methylethyl)-amino)phosphinothioyl) benzoic acid 1-methylethyl ester)
25321-14-6	dinitrotoluene (mixed isomers)

25321-22-6	dichlorobenzene (mixed isomers)
25376-45-8	diaminotoluene (mixed isomers)
26002-80-2	phenothrin (2,2-dimethyl-3-(2-methyl-1-propenyl) cyclopropanecarboxylic acid (3-phenoxyphenyl)methyl ester)
26471-62-5	toluene diisocyanate (mixed isomers)
26628-22-8	sodium azide
26644-46-2	triforine (n,n'-(1,4-piperazinediylbis(2,2,2-trichloroethylidene)) bisformamide)
27314-13-2	norflurazon (4-chloro-5-(methylamino)-2-(3-(trifluoromethyl) phenyl) - 3 (2h)-pyridazinone)
28057-48-9	d-trans-allethrin (d-trans-chrysanthemic acid of d-allethrone)
28249-77-6	thiobencarb (carbamic acid, diethylthio-,s-(p-chlorobenzyl) ester)
28407-37-6	C.I. Direct blue 218
29082-74-4	octachlorostyrene
29232-93-7	pirimiphos methyl (o-(2-(diethylamino)-6-methyl-4-pyrimidinyl)-o, o-dimethyl phosphorothioate)
30560-19-1	acephate (acetylphosphoramidothioic acid o,s-dimethyl ester)
31218-83-4	propetamphos (3-((ethylamino) methoxy phosphinothioyl)oxy] - 2 - butenoic acid, 1-methylethyl ester)
33089-61-1	amitraz
34014-18-1	tebuthiuron (n-(5-(1,1-dimethylethyl) -1,3,4-thiadiazol-2-yl) -n,n'-dimethylurea)
34077-87-7	dichlorotrifluoroethane
35367-38-5	diflubenzuron
35400-43-2	sulprofos (o-ethyl o-(4-(methylthio)phenyl) phosphorodithioic acid s-propyl ester)
35554-44-0	imazalil (1-(2-(2,4-dichlorophenyl) - 2 - (2-propenyloxy)ethyl)-1h-imidazole)
35691-65-7	1-bromo-1-(bromomethyl)-1,3-propane dicarbonitrile
38727-55-8	diethatyl ethyl
39156-41-7	2,4-diaminoanisole sulfate
39300-45-3	dinocap
39515-41-8	fenpropathrin (2,2,3,3-tetramethylcyclopropane carboxylic acid cyano(3-phenoxyphenyl)methyl ester)
40487-42-1	pendimethalin (n-(1-ethylpropyl)-3,4- dimethyl-2,6-dinitrobenzenamine)
41198-08-7	profenofos (o- (4-bromo-2-chlorophenyl) -o-ethyl-s-propylphosphorothioate)
41766-75-0	3,3'-dimethylbenzidine dihydrofluoride (o-tolidine dihydrofluoride)
42874-03-3	oxyfluorfen
43121-43-3	triadimefon (1-(4-chlorophenoxy) -3,3-dimethyl-1-(1h-1,2,4-triazol-1-yl)-2-butanone)
50471-44-8	vinclozolin (3-(3,5-dichlorophenyl) -5-ethenyl-5-methyl-2,4-oxazolidinedione)
51235-04-2	hexazinone

51338-27-3	diclofop methyl (2-(4-(2,4-dichlorophenoxy)phenoxy(propanoic acid, methyl ester)
51630-58-1	fenvalerate (4-chloro-alpha-(1-methylethyl) -benzeneacetic acid cyano (3-phenoxyphenyl)methyl ester)
52645-53-1	permethrin (3-(2,2-dichloroethenyl)-2,2-dimethylcyclopropane carboxylic acid, (3-phenoxyphenyl)methyl ester)
53404-19-6	bromacil, lithium salt (2,4-(1h,3h) -pyrimidinedione, 5-bromo-6-methyl-3-(1-methylpropyl), lithium salt)
53404-37-8	2,4-D 2-ethyl-4-methylpentyl ester
53404-60-7	dazomet, sodium salt (tetrahydro-3,5-dimethyl-2h-1,3,5-thiadiazine-2-thione, ion(1-), sodium)
55290-64-7	dimethipin (2,3,-dihydro-5,6-dimethyl-1,4-dithiin 1,1,4,4-tetraoxide)
55406-53-6	3-iodo-2-propynyl butylcarbamate
57213-69-1	triclopyr triethylammonium salt
59669-26-0	thiodicarb
60168-88-9	fenarimol (alpha -(2-chlorophenyl)- alpha -4-chlorophenyl) - 5-pyrimidinemethanol)
60207-90-1	propiconazole (1-[2-(2,4-dichlorophenyl)-4-propyl-1,3-dioxolan-2-yl] -methyl-1h-1,2,4,-triazole)
62476-59-9	acifluorfen, sodium salt (5- (2-chloro-4- (trifluoromethyl) phenoxy)-2-nitrobenzoic acid, sodium salt)
63938-10-3	chlorotetrafluoroethane
64902-72-3	chlorsulfuron (2-chloro-n-(((4-methoxy-6-methyl-1,3,5-triazin-2-yl)amino] carbonyl) benzene sulfonamide)
64969-34-2	3,3'-dichlorobenzidine sulfate
66441-23-4	fenoxaprop ethyl (2-(4-((6-chloro-2-benzoxazolylen)oxy)phenoxy) propanoic acid, ethyl ester)
67485-29-4	hydramethylnon (tetrahydro-5, 5-dimethyl-2(1h)-pyrimidinone[3-(4-(trifluoromethyl)phenyl) -1-(2-(4-(trifluoromethyl) phenyl)ethenyl)-2-propenylidene)hydrazone)
68085-85-8	cyhalothrin (3-(2-chloro-3,3,3-trifluoro-1-propenyl)-2,2-dimethylcyclopropanecarboxylic acid cyano (3-phenoxyphenyl)methyl ester)
68359-37-5	cyfluthrin (3-(2,2-dichloroethenyl)-2,2-dimethylcyclopropanecarboxylic acid, cyano(4-fluoro-3-phenoxyphenyl)methyl ester)
69409-94-5	fluvalinate (n-(2-chloro-4- (trifluoromethyl) phenyl)-dl-valine(+)-cyano (3-phenoxyphenyl)methyl ester)
69806-50-4	fluazifop butyl (2-(4-((5-(trifluoromethyl)-2-pyridinyl)oxy)-phenoxy) propanoic acid, butyl ester)
71751-41-2	abamectin (avermectin b1)
72178-02-0	fomesafen (5-(2-chloro-4-(trifluoromethyl)phenoxy) -n-methylsulfonyl)-2-nitrobenzamide)
72490-01-8	fenoxycarb (2-(4-phenoxy-phenoxy)-ethylcarbamic acid ethyl ester)
74051-80-2	sethoxydim (2-(1-(ethoxyimino) butyl)-5-(2-(ethylthio)propyl) -3-

	hydroxyl-2-cyclohexen-1-one)
76578-14-8	quizalofop-ethyl (2-(4-((6-chloro-2-quinoxalinyl) oxy)phenoxy) propanoic acid ethyl ester)
77501-63-4	lactofen (benzoic acid, (5-2-chloro-4-(trifluoromethyl)phenoxy) -2-nitro-2-ethoxy-1-methyl-2-oxoethyl ester)
82657-04-3	bifenthrin
88671-89-0	myclobutanil (alpha -butyl- alpha- (4-chlorophenyl) -1h-1,2,4-triazole-1-propanenitrile)
90454-18-5	dichloro-1,1,2-trifluoroethane
90982-32-4	chlorimuron ethyl (ethyl-2-((((4-chloro-6-methoxyprimidin-2-yl) -carbonyl)-amino)sulfonyl)benzoate)
101200-48-0	tribenuron methyl (2-(((((4-methoxy-6-methyl-1,3,5-triazin-2-yl)-methylamino) carbonyl)amino)sulfonyl)-, methyl ester)
111512-56-2	1,1-dichloro-1,2,3,3,3-pentafluoropropane (HCFC-225eb)
111984-09-9	3,3'-dimethoxybenzidine hydrochloride (o-dianisidine hydrochloride)
127564-92-5	dichloropentafluoropropane
128903-21-9	2,2-dichloro-1,1,1,3,3-
	pentafluoropropane (HCFC-225aa)
136013-79-1	1,3-dichloro-1,1,2,3,3-pentafluoropropane (HCFC-225ea)

(C) Chemical categories in alphabetical order:

antimony compounds: includes any unique chemical substance that contains antimony as part of that chemical's infrastructure.

arsenic compounds: includes any unique chemical substance that contains arsenic as part of that chemical's infrastructure.

barium compounds: includes any unique chemical substance that contains barium as part of that chemical's infrastructure.

beryllium compounds: includes any unique chemical substance that contains beryllium as part of that chemical's infrastructure.

cadmium compounds: includes any unique chemical substance that contains cadmium as part of that chemical's infrastructure.

chlorophenols:

where x = 1 to 5

chromium compounds: includes any unique chemical substance that contains chromium as part of that chemical's infrastructure.

cobalt compounds: includes any unique chemical substance that contains cobalt as part of that chemical's infrastructure.

copper compounds: includes any unique chemical substance that contains copper as part of that chemical's infrastructure.

cyanide compounds: X^+ CN^- where X = H^+ or any other group where a formal dissociation can be made. For example, KCN or CA $(CN)_2$.

diisocyanates: This category includes only those chemicals listed below.

--

38661-72-2	1,3-bis(methylisocyanate)-cyclohexane
10347-54-3	1,4-bis(methylisocyanate)-cyclohexane
2556-36-71	1,4-cyclohexane diisocyanate
134190-37-7	diethyldiisocyanatobenzene
4128-73-84	4,4'-diisocyanatodiphenyl ether
75790-87-32	2,4'-diisocyanatodiphenyl sulfide
91-93-0	3,3'-dimethoxybenzidine-4,4'-diisocyanate
91-97-4	3,3'-dimethyl-4,4'diphenylene diisocyanate
139-25-3	3,3'-dimethyldiphenylmethane-4,4'-diisocyanate
822-06-0	hexamethylene-1,6-diisocyanate
4098-71-9	isophorone diisocyanate
75790-84-0	4-methyldiphenylmethane-3,4-diisocyanate
5124-30-1	1,1methylene bis(4-isocyanatocyclohexane)
101-68-8	methylene bis (phenylisocyanate) (mdi)
3173-72-6	1,5-naphthalene diisocyanate
123-61-5	1,3-phenylene diisocyanate
104-49-4	1,4-phenylene diisocyanate
9016-87-9	polymeric diphenylmethane diisocyanate
16938-22-0	2,2,4-trimethylhexamethylene diisocyanate
15646-96-5	2,4,4-trimethylhexamethylene diisocyanate

Dioxin and dioxin-like compounds (manufacturing; and the processing or otherwise use of dioxin-like compounds if the dioxin and dioxin-like compounds are present as contaminants in a chemical and if they were created during the manufacturing of that chemical) (this category includes only those chemicals listed below).

--

67562-39-4	1,2,3,4,6,7,8-heptachlorodibenzofuran
55673-89-7	1,2,3,4,7,8,9-heptachlorodibenzofuran
70648-26-9	1,2,3,4,7,8-hexachlorodibenzofuran
55117-44-9	1,2,3,6,7,8-hexachlorodibenzofuran
72918-21-9	1,2,3,7,8,9-hexachlorodibenzofuran
60851-34-5	2,3,4,6,7,8-hexachlorodibenzofuran
39227-28-6	1,2,3,4,7,8-hexachlorodibenzo-p-dioxin
57653-85-7	1,2,3,6,7,8-hexachlorodibenzo-p-dioxin

19408-74-3	1,2,3,7,8,9-hexachlorodibenzo-p-dioxin
35822-46-9	1,2,3,4,6,7,8-hexachlorodibenzo-p-dioxin
39001-02-0	1,2,3,4,6,7,8,9-octachlorodibenzofuran
03268-87-9	1,2,3,4,6,7,8,9-octachlorodibenzo-p-dioxin
57117-41-6	1,2,3,7,8-pentachlorodibenzofuran
57117-31-4	2,3,4,7,8-pentachlorodibenzofuran
40321-76-4	1,2,3,7,8-pentachlorodibenzo-p-dioxin
51207-31-9	2,3,7,8-tetrachlorodibenzofuran
01746-01-6	2,3,7,8-tetrachlorodibenzo-p-dioxin

mercury compounds: includes any unique chemical substance that contains mercury as part of that chemical's infrastructure.

ethylenebisdithiocarbamic acid, salts and esters: includes any unique chemical substance that contains EDBC or an EDBC salt as part of that chemical's infrastructure.

certain glycol ethers:

$R\text{-}(OCH_2CH_2)_n\text{-}OR'$

Where N = 1, 2 or 3

R = alkyl C7 or less: or

R = phenyl or alkyl subtitled phenyl;

R' = H or alkyl C7 or less; or

OR' consisting of carboxylic acid ester, sulfate, phosphate, nitrate, or sulfonate.

lead compounds: includes any unique chemical substance that contains lead as part of that chemical's infrastructure.

manganese compounds: includes any unique chemical substance that contains manganese as part of that chemical's infrastructure.

mercury compounds: includes any unique chemical substance that contains mercury as part of that chemical's infrastructure.

nickel compounds: includes any unique chemical substance that contains nickel as part of that chemical's infrastructure.

nicotine and salts: includes any unique chemical substance that contains nicotine or a nicotine salt as part of that chemical's infrastructure.

nitrate compounds (water dissociable; reportable only when in aqueous solution)

polybrominated biphenyls (PBBS)

where X = 1 to 10

polychlorinated alkanes ($C_{10}$to C_{13}): includes those chemicals defined by the following formula:

$C_xH_{2x-y+2}Cl_y$

Where X = 10 to 13; Y = 3 to 12; and where the average chlorine content ranges from 40-70% with the limiting molecular formulas $C_{10}H_{19}Cl_3$ and $C_{13}H_{16}Cl_{12}$.

polycyclic aromatic compounds (PACs): this category includes only those chemicals listed below.

--

00056-55-3	benz (a) anthracene
00205-99-2	benzo (b) fluoranthene
00205-82-3	benzo (j) fluoranthene
00207-08-9	benzo (k) fluoranthene
00206-44-0	benzo (j,k) fluorene
00189-55-9	benzo (r,s,t) pentaphene
00218-01-9	benzo (a) phenanthrene
00050-32-8	benzo (a) pyrene
00226-36-8	dibenz (a,h) acridine
00224-42-0	dibenz (a,j) acridine
00053-70-3	dibenzo (a,h) anthracene
00194-59-2	7h-dibenzo (c,g) carbazole
05385-75-1	dibenzo (a,e) fluoranthene
00192-65-4	dibenzo (a,e) pyrene
00189-64-0	dibenzo (a,h) pyrene
00191-30-0	dibenzo (a,l) pyrene
00057-97-6	7, 12-dimethylbenz (a) anthracene
00193-39-5	indeno [1,2,3-cd] pyrene
00056-49-5	3-methylcholanthrene
03697-24-3	5-methylchrysene
05522-43-0	1-nitropyrene

selenium compounds: includes any unique chemical substance that contains selenium as part of that chemical's infrastructure.

silver compounds: includes any unique chemical substance that contains silver as part of that chemical's infrastructure.

strychnine and salts: includes any unique chemical substance that contains strychnine or a strychnine salt as part of that chemical's infrastructure.

thallium compounds: includes any unique chemical substance that contains thallium as part of that chemical's infrastructure.

vanadium compounds: includes any unique chemical substance that contains thallium as part of that chemical's infrastructure.

warfarin and salts: includes any unique chemical substance that contains warfarin or a warfarin salt as part of that chemical's infrastructure.

zinc compounds: includes any unique chemical substance that contains zinc as part of that chemical's infrastructure.

Effective: 01/16/2006

R.C. 119.032 review dates: 10/03/2005 and 01/16/2011

CERTIFIED ELECTRONICALLY
Certification

01/04/2006
Date

Promulgated Under: 119.03
Statutory Authority: R.C. Chapter 3751.02
Rule Amplifies: R.C. Chapter 3751.03
Prior Effective Dates: 6/22/1989, 7/10/1990, 8/12/1991, 10/30/1992, 5/7/2001

3745-100-11 **Toxic chemical release reporting form and instructions.**

[Comment: For dates of non-regulatory government publications, publications of recognized organizations and associations, federal rules, and federal statutory provisions referenced in this rule, see the "Incorporation by Reference" paragraph at the end of rule 3745-100-01 of the Administrative Code.]

(A) Availability of reporting form and instructions. The most current version of EPA Form R and Form R Schedule 1 may be found on the following USEPA program web site: http://www.epa.gov/tri. Any subsequent changes to the Form R or Form R Schedule 1 will be posted on this web site. Submitters may also contact the TRI Program at (202) 564-9554 to obtain this information. Ohio EPA also encourages facilities subject to this part to submit the required information to Ohio EPA by using magnetic media (computer disk) in lieu of Form R. Instructions for submitting and using magnetic media may also be obtained from the address given in this paragraph.

(B) Form elements. Information elements reportable on EPA Form R and Form R Schedule 1, or equivalent magnetic media format include the following:

(1) An indication of whether the report:

(a) Claims chemical identity as trade secret.

(b) Covers the entire facility or part of a facility.

(2) Signature of a senior management official certifying the following; "I hereby certify that I have reviewed the attached documents and, to the best of my knowledge and belief, the submitted information is true and complete and that amounts and values in this report are accurate based upon reasonable estimates using data available to the preparer of the report."

(3) Facility name and address including the toxic chemical release inventory facility identification number if known.

(4) Name and telephone number for both a technical contact and a public contact.

(5) The four-digit SIC code(s) for the facility or establishments in the facility until the reporting year ending December 31, 2005, for which reporting forms are due July 1, 2006. Beginning with the reporting year ending December 31, 2006, for which reporting forms are due July 1, 2007, and for each subsequent reporting year, the six-digit NAICS code(s) for the facility or establishments in the facility.

(6) Dun and Bradstreet identification number.

(7) The name(s) of receiving stream(s) or water body to which the chemical is released.

(8) Name of the facility's parent company and its Dunn and Bradstreet identification number.

(9) Name and chemical abstract number (CAS) (if applicable) of the chemical reported.

(10) If the chemical identity is claimed trade secret, a generic name for the chemical.

(11) A mixture component identity if the chemical identity is not known.

(12) An indication of the activities and uses of the chemical at the facility.

(13) An indication of the maximum amount of the chemical on site at any point in time during the reporting year.

(14) Information on releases of the chemical to the environment as follows:

(a) An estimate of total releases in pounds (except for dioxin and dioxin-like compounds, which shall be reported in grams) per year (releases of less than one thousand pounds per year may be indicated in ranges, except for chemicals set forth in rule 3745-100-16 of the Administrative Code) from the facility plus an indication of the basis of estimate for the following:

(i) Fugitive or non-point air emissions.

(ii) Stack or point air emissions

(iii) Discharges to receiving streams or water bodies including an indication of the "per cent" of releases due to stormwater.

(iv) Underground injection on site.

(v) Releases to land on site.

(b) Additional reporting for the dioxin and dioxin-like compounds category.

(i) For reports pertaining to a reporting year ending on or before December 31, 2007, report a distribution of the chemicals included in the dioxin and dioxin-like compounds category. Such distribution shall either represent the distribution of the total quantity of dioxin and dioxin-like compounds released to all media from the facility; or its one best media-specific distribution.

(ii) For reports pertaining to a reporting year ending after December 31, 2007, report the quantity of each member of the dioxin and dioxin-like compounds category in units of grams per year on Form R Schedule 1.

(15) Information on transfers of chemicals in wastes to off-site locations as follows:

(a) For transfers to publicly owned treatment works (POTW):

(i) The name and address (including county) of each POTW to which the chemical is transferred.

(ii) An estimate of the amount of the chemical transferred in pounds (except for dioxin and dioxin-like compounds, which shall be reported in grams) per year (transfers of less than one thousand pounds per year may be indicated as a range, except for chemicals set forth in rule 3745-100-16 of the Administrative Code) and an indication of the basis of the estimate. In addition, for reports pertaining to a reporting year ending after December 31, 2007, report the quantity of each member of the dioxin and dioxin-like compounds category in units of grams per year on Form R Schedule 1.

(b) For transfers to other off-site locations:

(i) The name, address (including county), and EPA identification number (RCRA I.D. number) of each off-site location, including an indication of whether the location is owned or controlled by the reporting facility or its parent company.

(ii) An estimate of the amount of the chemical in waste transferred in pounds (except for dioxin and dioxin-like compounds, which shall be reported in grams) per year (transfers of less than one thousand pounds may be indicated in ranges, except for chemicals set forth in rule 3745-100-16 of the Administrative Code) and an indication of the basis of the estimate. In addition, for reports pertaining to a reporting year ending after December 31, 2007, report the quantity of each member of the dioxin and dioxin-like compounds category in units of grams per year on Form R Schedule 1.

(16) The following information relative to waste treatment:

(a) An indication of the general type of wastestream containing the reported chemical.

(b) The treatment method applied to the wastestream.

(c) An indication of the concentration of the chemical in the wastestream prior to treatment. An estimate of the efficiency of the treatment, which shall be indicated by a range.

(d) An indication (use is optional) of whether treatments listed are part of a treatment sequence.

(C) The owner or operator subject to the reporting requirements must submit to the Ohio EPA a completed USEPA Form R or Form R Schedule 1 on or before July first of each year in accordance with the instructions in 40 CFR 372.85.

(D) The director shall prescribe and publish a "Fee Calculation Worksheet" which shall be submitted by owners and operators subject to the reporting requirements.

Effective: 09/25/2008

R.C. 119.032 review dates: 01/16/2011

CERTIFIED ELECTRONICALLY
Certification

09/15/2008
Date

Promulgated Under: 119.03
Statutory Authority: 3751.02
Rule Amplifies: 3751.03
Prior Effective Dates: 6/22/1989, 01/16/2006

3745-100-12 **Fee system.**

[Comment: For dates of non-regulatory government publications, publications of recognized organizations and associations, federal rules, and federal statutory provisions referenced in this rule, see the "Incorporation by Reference" section at the end of rule 3745-100-01.]

(A) The owner or operator of a facility required to annually file one or more toxic chemical release forms shall submit with the release form a filing fee of fifty dollars.

(B) The owner or operator shall submit an additional fee of fifteen dollars per release form filed, but not exceeding a total additional fee of five hundred dollars.

(C) The owner or operator of a facility who fails to submit a "Toxic Chemical Release Form" within thirty days after the applicable date prescribed in paragraph (F) of rule 3745-100-07 of the Administrative Code shall submit with the form a late filing fee of fifteen per cent of the total fees due under paragraphs (A) and (B) of this rule, in addition to the fees due under those paragraphs.

(D) Fees collected by the director as required under this rule shall be credited to the "Toxic Release Reporting Fund" created in the state treasury by Substitute Senate Bill 367 of the 117th General Assembly for the implementation, administration and operation of the program.

Effective: 01/16/2006

R.C. 119.032 review dates: 10/03/2005 and 01/16/2011

CERTIFIED ELECTRONICALLY
Certification

01/04/2006
Date

Promulgated Under: 119.03
Statutory Authority: R. C. Chapter 3751.02
Rule Amplifies: R. C. Chapter 3751.05
Prior Effective Dates: 6/22/1989.

3745-100-13 **Trade secret claims.**

[Comment: For dates of non-regulatory government publications, publications of recognized organizations and associations, federal rules, and federal statutory provisions referenced in this rule, see the "Incorporation by Reference" section at the end of rule 3745-100-01.]

The owner or operator of a facility subject to the reporting requirements that claims a trade secret shall conform to paragraphs (A) to (D) of this rule.

(A) A submitter making a trade secrecy claim under this rule shall submit to entities other than U.S. EPA (e.g., the Ohio EPA, local emergency planning committee and local fire department) only the sanitized or public copy of the submission and substantiation.

(B) Method of asserting claims of trade secrecy for information submitted under section 313 of the act.

(1) Submitters may claim as trade secret the specific chemical identity, including the chemical name and other specific identification, of any chemical subject to reporting under section 313.

(2) To make a claim, the submitter shall submit to U.S. EPA the following:

(a) An unsanitized copy of the toxic release inventory form under section 313 of the act with the information claimed as trade secret clearly identified. To do this, the submitter shall check the box on the form indicating that the chemical identity is being claimed as a trade secret. The submitter shall enter the generic class or category that is structurally descriptive of the chemical, as specified in paragraph (C) of this rule.

(b) A sanitized copy of the toxic release inventory form. This copy shall be identical to the document in paragraph (B)(1)(a) of this rule, except that the submitter shall delete the chemical identity claimed as a trade secret. This copy shall also be submitted to the state official or officials designated to receive this information.

(c) A sanitized and unsanitized substantiation in accordance with 40 CFR 350.7 for every chemical identity claimed as trade secret.

(3) If the submitter wishes to claim information in the substantiation as trade secret or business confidential, it shall do so in accordance with 40 CFR 350.7(d).

(4) Section 313 claims shall be sent to the address specified in 40 CFR 350.16.

(C) Method of choosing a generic class or category for section 313 of the act. A facility owner or operator claiming a chemical identity as a trade secret should choose a generic class or category for the chemical that is structurally descriptive of the chemical.

(D) If a specific chemical identity is submitted under Title III to U.S. EPA, or to a state emergency response commission, designated state agency, local emergency planning committee or local fire department, without asserting a trade secret claim, the chemical identity shall be considered to have been voluntarily disclosed, and a nontrade secret.

Effective: 01/16/2006

R.C. 119.032 review dates: 10/03/2005 and 01/16/2011

CERTIFIED ELECTRONICALLY
Certification

01/04/2006
Date

Promulgated Under: 119.03
Statutory Authority: R. C. Chapter 3751.02
Rule Amplifies: R. C. Chapter 3751.04
Prior Effective Dates: 6/22/1989.

3745-100-14 **Alternate threshold and certification.**

[Comment: For dates of non-regulatory government publications, publications of recognized organizations and associations, federal rules, and federal statutory provisions referenced in this rule, see the "Incorporation by Reference" paragraph at the end of rule 3745-100-01 of the Administrative Code.]

(A) Except as provided in paragraph (E) of this rule:

(1) General. With respect to the manufacture, process, or otherwise use of a toxic chemical, the owner or operator of a facility may apply an alternate threshold of one million pounds per year to that chemical if the owner or operator calculates that the facility would have:

(a) No more than two thousand pounds of total on-site and off-site disposal or other releases (including disposal or other releases that resulted from catastrophic events); and

(b) An annual reportable amount of that toxic chemical not exceeding five thousand pounds for the combined total quantities released at the facility; disposed within the facility; treated for destruction at the facility; recovered at the facility as a result of recycling operations; combusted for the purpose of energy recovery at the facility; transferred from the facility to off-site locations for the purpose of recycling, energy recovery, treatment, and/or disposal; and managed as a result of remedial actions, catastrophic events, or one-time events not associated with production processes during the reporting year. These volumes correspond to the sum of amounts reportable for data elements on USEPA Form R as part II column B or sections 8.1 (total quantity released), 8.2 (quantity used for energy recovery on-site), 8.3 (quantity used for energy recovery off-site), 8.4 (quantity recycled on-site), 8.5 (quantity recycled off-site), 8.6 (quantity treated on-site), 8.7 (quantity treated off-site), and 8.8 (quantity released to the environment as a result of remedial actions, catastrophic events, or one-time events not associated with production processes).

(2) Chemicals of special concern. With respect to the manufacture, process, or otherwise use of a toxic chemical, the owner or operator of a facility may apply an alternate threshold of one million pounds per year to that chemical if the owner or operator calculates that the facility would have:

(a) Zero on-site and off-site disposal or other releases (including disposal or other releases that resulted from catastrophic events); and

(b) An annual reportable amount of a chemical of special concern not exceeding five hundred pounds. The annual reportable amount of a chemical of special concern is the combined total of:

(i) Quantities treated for destruction at the facility;

(ii) Quantities recovered at the facility as a result of recycling operations;

(iii) Quantities combusted for the purpose of energy recovery at the facility;

(iv) Quantities combusted for the purpose of energy recovery at the facility;

(v) Quantities transferred from the facility to off-site locations for the purpose of recycling, energy recovery, and/or treatment; and

(vi) Quantities managed through recycling, energy recovery, or treatment for destruction that were the result of remedial actions, catastrophic events, or one-time events not associated with production processes during the reporting year.

(B) If an owner or operator of a facility determines that the owner or operator may apply the alternate reporting threshold specified in paragraph (A) of this rule for a specific toxic chemical, the owner or operator is not required to submit a report for that chemical under rule 3745-100-07 of the Administrative Code, but must submit a certification statement that contains the information required in rule 3745-100-15 of the Administrative Code. The owner or operator of the facility must also keep records as specified in paragraph (D) of rule 3745-100-03 of the Administrative Code.

(C) Threshold determination provisions of rule 3745-100-06 of the Administrative Code and exemptions pertaining to threshold determinations in rule 3745-100-08 of the Administrative Code are applicable to the determination of whether the alternate threshold has been met.

(D) Each certification statement under this section for activities involving a toxic chemical that occurred during a calendar year at a facility must be submitted to Ohio EPA on or before July first of the next year.

(E) The alternative thresholds described in paragraph (A) of this rule are limited by the following:

(1) The provisions of paragraph (A)(1) of this rule do not apply to any chemicals listed in rule 3745-100-16 of the Administrative Code.

(2) The provisions of paragraph (A)(2) of this rule apply only to chemicals listed in rule 3745-100-16 of the Administrative Code.

(3) Dioxins and dioxin-like compounds are not eligible for the alternate thresholds described in paragraph (A) of this rule.

Effective: 09/25/2008

R.C. 119.032 review dates: 01/16/2011

CERTIFIED ELECTRONICALLY
Certification

09/15/2008
Date

Promulgated Under: 119.03
Statutory Authority: 3751.02
Rule Amplifies: 3751.03
Prior Effective Dates: 5/07/2001, 01/16/2006

3745-100-15 **Alternate threshold certification and instructions.**

[Comment: For dates of non-regulatory government publications, publications of recognized organizations and associations, federal rules, and federal statutory provisions referenced in this rule, see the "Incorporation by Reference" paragraph at the end of rule 3745-100-01 of the Administrative Code.]

(A) Availability of the alternate threshold certification statement and instructions. Availability of the alternate threshold certification statement and instructions is the same as provided in rule 3745-100-11 of the Administrative Code for availability of the reporting form and instructions.

(B) Alternate threshold certification statement elements. The following information must be reported on an alternate threshold certification statement pursuant to rule 3745-100-14 of the Administrative Code:

(1) Reporting year.

(2) An indication of whether the chemical identified is being claimed as trade secret.

(3) Chemical name and chemical abstract number (CAS) (if applicable) of the chemical, or the category name.

(4) Signature of a senior management official certifying the following:

(a) "Pursuant to paragraph (A)(1) of rule 3745-100-14 of the Administrative Code, I hereby certify that to the best of my knowledge and belief for the toxic chemical(s) listed in this statement, for this reporting year, the annual reportable amount for each chemical, as defined in 40 CFR 372.27(a)(1), did not exceed five thousand pounds, which included no more than two thousand pounds of total disposal or other releases to the environment, and that the chemical was manufactured, or processed, or otherwise used in an amount not exceeding one million pounds during this reporting year"; and/or

(b) "Pursuant to paragraph (A)(2) of rule 3745-100-14 of the Administrative Code, I hereby certify that to the best of my knowledge and belief for the toxic chemical(s) of special concern listed in this statement, there were zero disposals or other releases to the environment (including disposals or other releases that resulted from catastrophic events) for this reporting year, the Annual Reportable Amount of a Chemical of Special Concern for each such chemical, as defined in paragraph (A)(2) of rule 3745-100-14 of the Administrative Code, did not exceed five hundred pounds for this reporting year, and that the chemical was manufactured, or processed, or otherwise

used in an amount not exceeding one million pounds during this reporting year."

(5) Date signed.

(6) Facility name and address.

(7) Mailing address of the facility if different than paragraph (B)(6) of this rule.

(8) Toxic chemical release inventory facility identification number if known.

(9) Name and telephone number of a technical contact.

(10) The four-digit SIC code(s) for the facility or establishments in the facility until the reporting year ending December 31, 2005, for which reporting forms are due July 1, 2006. Beginning with the reporting year ending December 31, 2006, for which reporting forms are due July 1, 2007, and for each subsequent reporting year, the six-digit NAICS code(s) for the facility or establishments in the facility.

(11) Dun and Bradstreet Number of the facility

(12) Name of the facility's parent company.

(13) Parent company's Dunn and Bradstreet number.

Effective: 09/25/2008

R.C. 119.032 review dates: 01/16/2011

CERTIFIED ELECTRONICALLY
Certification

09/15/2008
Date

Promulgated Under: 119.03
Statutory Authority: 3751.02
Rule Amplifies: 3751.03
Prior Effective Dates: 5/07/2001, 01/16/2006

3745-100-16 **Lower thresholds for chemicals of special concern.**

(A) Notwithstanding rule 3745-100-06 or 3745-100-14 of the Administrative Code, for the toxic chemicals set forth in this paragraph, the threshold amounts for manufacturing (including importing), processing, and otherwise using such toxic chemicals are as set forth in this rule.

(1) Chemicals listed in alphabetic order.

--

CHEMICAL NAME	CAS NUMBER	REPORTING THRESHOLD (POUNDS)
Aldrin	00309-00-2	100
Benzo(g,h,i)perylene	00191-24-2	10
Chlordane	00057-74-9	10
Heptachlor	00076-44-8	10
Hexachlorobenzene	00118-74-1	10
Isodrin	00465-73-6	10
Lead (this lower threshold does not apply to lead when contained in a stainless steel, brass or bronze alloy)	07439-97-1	100
Mercury	07439-97-6	10
Methoxychlor	00072-43-5	100
Octachlorostyrene	29082-74-4	10
Pendimethalin	40487-42-1	100
Pentachlorobenzene	00608-93-5	10
Polychlorinated biphenyl (PCBs)	01336-36-3	10
Tetrabromobisphenol A	00079-94-7	100
Toxaphene	08001-35-2	10
Trifluralin	01582-09-8	100

(2) Chemical categories in alphabetic order.

--

CHEMICAL NAME	CAS NUMBER	REPORTING THRESHOLD
Dioxin and dioxin-like compounds (Manufacturing; and the processing or otherwise use of dioxin and dioxin-like compounds if the dioxin and dioxin-like compounds are present as contaminants in a chemical and if they were created during the manufacturing of that chemical.) (This category includes only those chemicals listed below).		0.1 grams

1,2,3,4,6,7,8-Heptachlorodibenzofuran	67562-39-4	0.1 grams
1,2,3,4,7,8,9-Heptachlorodibenzofuran	55673-89-7	0.1 grams
1,2,3,4,7,8-Hexachlorodibenzofuran	70648-26-9	0.1 grams
1,2,3,6,7,8-Hexachlorodibenzofuran	55117-44-9	0.1 grams
1,2,3,7,8,9-Hexachlorodibenzofuran	72918-21-9	0.1 grams
2,3,4,6,7,8-Hexachlorodibenzofuran	60851-34-5	0.1 grams
1,2,3,4,7,8-Hexachlorodibenzo-P-dioxin	39227-28-6	0.1 grams
1,2,3,6,7,8-Hexachlorodibenzo-P-dioxin	57653-85-7	0.1 grams
1,2,3,7,8,9-Hexachlorodibenzo-P-dioxin	19408-74-3	0.1 grams
1,2,3,4,6,7,8-Hexachlorodibenzo-P-dioxin	35822-46-9	0.1 grams
1,2,3,4,6,7,8,9-Octachlorodibenzofuran	39001-02-0	0.1 grams
1,2,3,4,6,7,8,9-Octachlorodibenzo-P-dioxin	03268-87-9	0.1 grams
1,2,3,7,8-Pentachlorodibenzofuran	57117-41-6	0.1 grams
2,3,4,7,8-Pentachlorodibenzofuran	57117-31-4	0.1 grams
1,2,3,7,8-Pentachlorodibenzo-P-dioxin	40321-76-4	0.1 grams
2,3,7,8-Tetrachlorodibenzofuran	51207-31-9	0.1 grams
2,3,7,8-Tetrachlorodibenzo-P-dioxin	01746-01-6	0.1 grams
Lead Compounds		100 pounds
Mercury Compounds		10 pounds
Polycyclic aromatic compounds (PACs) (This category includes only those chemicals listed below.)		100 pounds
Benz(a)anthracene	00056-55-3	100 pounds
Benzo(b)fluoranthene	00205-99-2	100 pounds
Benzo(j)fluoranthene	00205-82-3	100 pounds
Benzo(k)fluoranthene	00207-08-9	100 pounds
Benzo(j,k)fluorene	00206-44-0	100 pounds
Benzo(r,s,t)pentaphene	00189-55-9	100 pounds
Benzo(a)phenanthrene	00218-01-9	100 pounds
Benzo(a)pyrene	00050-32-8	100 pounds
Dibenz(a,h)acridine	00226-36-8	100 pounds
Dibenz(a,j)acridine	00224-42-0	100 pounds
Dibenzo(a,h)anthracene	00053-70-3	100 pounds
7H-Dibenzo(c,g)carbazole	00194-59-2	100 pounds
Dibenzo(a,e)fluoranthene	05385-75-1	100 pounds
Dibenzo(a,e)pyrene	00192-65-4	100 pounds
Dibenzo(a,h)pyrene	00189-64-0	100 pounds
Dibenzo(a,l)pyrene	00191-30-0	100 pounds
7,12-Dimethylbenz(a)anthracene	00057-97-6	100 pounds
Indeno[1,2,3-cd]pyrene	00193-39-5	100 pounds
3-Methylcholanthrene	00056-49-5	100 pounds
5-Methylchrysene	03697-24-3	100 pounds
1-Nitropyrene	05522-43-0	100 pounds

(B) The threshold determination provisions under rule 3745-100-06 (C) to (H) of the Administrative Code and the exemptions under rule 3745-100-08 (B) to (H) of the

Administrative Code are applicable to the toxic chemicals listed in rule 3745-100-16 (A) of the Administrative Code.

Effective: 01/16/2006

R.C. 119.032 review dates: 10/03/2005 and 01/16/2011

CERTIFIED ELECTRONICALLY
Certification

01/04/2006
Date

Promulgated Under: 119.03
Statutory Authority: R. C. Chapter 3745.02
Rule Amplifies: R. C. Chapter 3745.03
Prior Effective Dates: 5/1/2003

3745-100-17 **SIC and NAICS codes to which this chapter applies.**

[Comment: For dates of non-regulatory government publications, publications of recognized organizations and associations, federal rules, and federal statutory provisions referenced in this rule, see the "Incorporation by Reference" paragraph at the end of rule 3745-100-01 of the Administrative Code.]

The requirements of this chapter apply to facilities in the following SIC and NAICS codes. This rule contains three listings: Paragraph (A) of this rule lists the SIC codes to which this chapter applies. Paragraph (B) of this rule lists the NAICS codes that correspond to SIC codes 20 to 39 to which this chapter applies. Paragraph (C) of this chapter lists the NAICS codes that correspond to SIC codes other than SIC codes 20 to 39 to which this chapter applies.

(A) SIC codes

--

Major group or industry code	Exceptions and/or limitations
10	Except 1011, 1081, and 1094.
12	Except 1241.
20 to 39	
4911, 4931, 4939	Limited to facilities that combust coal and/or oil for the purpose of generating power for distribution in commerce.
4953	Limited to facilities regulated under the Resource Conservation and Recovery Act.
5169	
5171	
7389	Limited to facilities primarily engaged in solvent recovery services on a contract or fee basis.

(B) NAICS codes that correspond to SIC codes 20 to 39

--

Subsector code or industry code	Exceptions and/or limitations
113310	
311	Except 311119-Exception is limited to facilities primarily engaged in Custom Grain Grinding for Animal Feed (previously classified under SIC 0723, Crop Preparation Services for Market, Except Cotton Ginning);
	Except 311330-Exception is limited to facilities primarily engaged in the retail sale of candy, nuts, popcorn and other confections not for immediate consumption made on the premises (previously classified

	under SIC 5441, Candy, Nut, and Confectionery Stores);
	Except 311340-Exception is limited to facilities primarily engaged in the retail sale of candy, nuts, popcorn and other confections not or immediate consumption made on the premises (previously classified under SIC 5441, Candy, Nut, and Confectionery Stores);
	Except 311811-Retail Bakeries (previously classified under SIC 5461, Retail Bakeries);
	Except 311611-Exception is limited to facilities primarily engaged in Custom Slaughtering for individuals (previously classified under SIC 0751, Livestock Services, Except Veterinary, Slaughtering, custom: for individuals);
	Except 311612-Exception is limited to facilities primarily engaged in the cutting up and resale of purchased fresh carcasses for the trade (including boxed beef), and in the wholesale distribution of fresh, cured, and processed (but not canned) meats and lard (previously classified under SIC 5147, Meats and Meat Products);
312	Except 312112-Exception is limited to facilities primarily engaged in bottling mineral or spring water (previously classified under SIC 5149, Groceries and Related Products, NEC);
	Except 312229-Exception is limited to facilities primarily engaged in providing Tobacco Sheeting Services (previously classified under SIC 7389, Business Services, NEC);
313	Except 313311-Exception is limited to facilities primarily engaged in converting broadwoven piece goods and broadwoven textiles, (previously classified under SIC 5131, Piece Goods Notions, and Other Dry Goods, broadwoven and non-broadwoven piece good converters), and facilities primarily engaged in sponging fabric for tailors and dressmakers (previously classified under SIC 7389, Business Services, NEC (Sponging fabric for tailors and dressmakers));
	Except 313312 Exception is limited to facilities primarily engaged in converting narrow woven Textiles, and narrow woven piece goods, (previously classified under SIC 5131, Piece Goods Notions, and Other Dry Goods, converters, except broadwoven fabric);
314	Except 314121-Exception is limited to facilities primarily engaged in making Custom drapery for retail sale (previously classified under SIC 5714, Drapery, Curtain, and Upholstery Stores);
	Except 314129 Exception is limited to facilities primarily engaged in making Custom slipcovers for retail sale (previously classified under SIC 5714, Drapery, Curtain, and Upholstery Stores);
	Except 314999-Exception is limited to facilities primarily engaged in Binding carpets and rugs for the trade, Carpet cutting and binding, and Embroidering on textile products (except apparel) for the trade (previously classified under SIC 7389, Business Services Not Elsewhere Classified, Embroidering of advertising on shirts and Rug binding for the trade);
315	Except 315222-Exception is limited to custom tailors primarily engaged in making and selling men's and boys' suits, cut and sewn from

	purchased fabric (previously classified under SIC 5699, Miscellaneous Apparel and Accessory Stores (custom tailors));
	Except 315223-Exception is limited to custom tailors primarily engaged in making and selling men's and boys' dress shirts, cut and sewn from purchased fabric (previously classified under SIC 5699, Miscellaneous Apparel and Accessory Stores (custom tailors));
	Except 315233-Exception is limited to custom tailors primarily engaged in making and selling bridal dresses or gowns, or women's, misses' and girls' dresses cut and sewn from purchased fabric (except apparel contractors)(custom dressmakers) (previously classified under SIC Code 5699, Miscellaneous Apparel and Accessory Stores);
316	
321	
322	
323	Except 323114-Exception is limited to facilities primarily engaged in reproducing text, drawings, plans, maps, or other copy, by blueprinting, photocopying, mimeographing, or other methods of duplication other than printing or microfilming (i.e., instant printing) (previously classified under SIC 7334, Photocopying and Duplicating Services, (instant printing));
324	
325	Except 325998-Exception is limited to facilities primarily engaged in Aerosol can filling on a job order or contract basis (previously classified under SIC 7389, Business Services, NEC (aerosol packaging));
326	Except 326212-Tire Retreading, (previously classified under SIC 7534, Tire Retreading and Repair Shops (rebuilding));
327	Except 327112-Exception is limited to facilities primarily engaged in manufacturing and selling pottery on site (previously classified under SIC 5719, Miscellaneous Homefurnishing Stores);
331	
332	
333	
334	Except 334611-Software Reproducing (previously classified under SIC 7372, Prepackaged Software, (reproduction of software));
	Except 334612-Exception is limited to facilities primarily engaged in mass reproducing pre-recorded Video cassettes, and mass reproducing Video tape or disk (previously classified under SIC 7819, Services Allied to Motion Picture Production (reproduction of Video));
335	Except 335312-Exception is limited to facilities primarily engaged in armature rewinding on a factory basis (previously classified under SIC 7694 (Armature Rewinding Shops (remanufacturing));
336	
337	Except 337110-Exception is limited to facilities primarily engaged in the retail sale of household furniture and that manufacture custom wood kitchen cabinets and counter tops (previously classified under SIC 5712, Furniture Stores (custom wood cabinets));
	Except 337121-Exception is limited to facilities primarily engaged in the

	retail sale of household furniture and that manufacture custom made upholstered household furniture (previously classified under SIC 5712, Furniture Stores (upholstered, custom made furniture));
	Except 337122-Exception is limited to facilities primarily engaged in the retail sale of household furniture and that manufacture nonupholstered, household type, custom wood furniture (previously classified under SIC 5712, Furniture Stores (custom made wood nonupholstered household furniture except cabinets));
339	Except 339113-Exception is limited to facilities primarily engaged in manufacturing orthopedic devices to prescription in a retail environment (previously classified under SIC 5999, Miscellaneous Retail Stores, NEC);
	Except 339115-Exception is limited to lens grinding facilities that are primarily engaged in the retail sale of eyeglasses and contact lenses to prescription for individuals (previously classified under SIC 5995, Optical Goods Stores (optical laboratories grinding of lenses to prescription));
	Except 339116-Dental Laboratories (previously classified under SIC 8072, Dental Laboratories);
111998	Limited to facilities primarily engaged in reducing maple sap to maple syrup (previously classified under SIC 2099, Food Preparations, NEC, Reducing Maple Sap to Maple Syrup);
211112	Limited to facilities that recover sulfur from natural gas (previously classified under SIC 2819, Industrial Inorganic chemicals, NEC (recovering sulfur from natural gas));
212324	Limited to facilities operating without a mine or quarry and that are primarily engaged in beneficiating kaolin and clay (previously classified under SIC 3295, Minerals and Earths, Ground or Otherwise Treated (grinding, washing, separating, etc. of minerals in SIC 1455));
212325	Limited to facilities operating without a mine or quarry and that are primarily engaged in beneficiating clay and ceramic and refractory minerals (previously classified under SIC 3295, Minerals and Earths, Ground or Otherwise Treated (grinding, washing, separating, etc. of minerals in SIC 1459));
212393	Limited to facilities operating without a mine or quarry and that are primarily engaged in beneficiating chemical or fertilizer mineral raw materials (previously classified under SIC 3295, Minerals and Earths, Ground or Otherwise Treated (grinding, washing, separating, etc. of minerals in SIC 1479));
212399	Limited to facilities operating without a mine or quarry and that are primarily engaged in beneficiating nonmetallic minerals (previously classified under SIC 3295, Minerals and Earths, Ground or Otherwise Treated (grinding, washing, separating, etc. of minerals in SIC 1499));
488390	Limited to facilities that are primarily engaged in providing routine repair and maintenance of ships and boats from floating drydocks (previously classified under SIC 3731, Shipbuilding and Repairing (floating drydocks not associated with a shipyard));

511110	
511120	
511130	
511140	Except facilities that are primarily engaged in furnishing services for direct mail advertising including Address list compilers, Address list publishers, Address list publishers and printing combined, Address list publishing , Business directory publishers, Catalog of collections publishers, Catalog of collections publishers and printing combined, Mailing list compilers, Directory compilers, and Mailing list compiling services (previously classified under SIC 7331, Direct Mail Advertising Services (mailing list compilers));
511191	
511199	
512220	
512230	Except facilities primarily engaged in Music copyright authorizing use, Music copyright buying and licensing, and Music publishers working on their own account (previously classified under SIC 8999, Services, NEC (music publishing));
519130	Limited to facilities primarily engaged in Internet newspaper publishing (previously classified under SIC 2711, Newspapers: Publishing, or Publishing and Printing), Internet periodical publishing (previously classified under SIC 2721, Periodicals: Publishing, or Publishing and Printing), Internet book publishing (previously classified under SIC 2731, Books: Publishing, or Publishing and Printing), Miscellaneous Internet publishing (previously classified under SIC 2741, Miscellaneous Publishing), Internet greeting card publishers (previously classified under SIC 2771, Greeting Cards); Except for facilities primarily engaged in web search portals;
541712	Limited to facilities that are primarily engaged in Guided missile and space vehicle engine research and development (previously classified under SIC 3764, Guided Missile and Space Vehicle Propulsion Units and Propulsion Unit Parts), and in Guided missile and space vehicle parts (except engines) research and development (previously classified under SIC 3769, Guided Missile and Space Vehicle Parts and Auxiliary Equipment, Not Elsewhere Classified);
811490	Limited to facilities that are primarily engaged in repairing and servicing pleasure and sail boats without retailing new boats (previously classified under SIC 3732, Boat Building and Repairing (pleasure boat building));

(C) NAICS codes that correspond to SIC codes other than SIC codes 20 to 39

--

Subsector or industry code	exceptions and/or limitations
212111	
212112	
212113	
212221	

212222	
212231	
212234	
212299	
221111	Limited to facilities that combust coal and/or oil for the purpose of generating power for distribution in commerce.
221112	Limited to facilities that combust coal and/or oil for the purpose of generating power for distribution in commerce.
221113	Limited to facilities that combust coal and/or oil for the purpose of generating power for distribution in commerce.
221119	Limited to facilities that combust coal and/or oil for the purpose of generating power for distribution in commerce.
221121	Limited to facilities that combust coal and/or oil for the purpose of generating power for distribution in commerce.
221122	Limited to facilities that combust coal and/or oil for the purpose of generating power for distribution in commerce.
221330	Limited to facilities engaged in providing combinations of electric, gas, and other services, not elsewhere classified (N.E.C.) (previously classified under SIC 4939, Combination Utility Services Not Elsewhere Classified.)
424690	
424710	
425110	Limited to facilities previously classified in SIC 5169, Chemicals and Allied Products, Not Elsewhere Classified.
425120	Limited to facilities previously classified in SIC 5169, Chemicals and Allied Products, Not Elsewhere Classified.
562112	Limited to facilities primarily engaged in solvent recovery services on a contract or fee basis (previously classified under SIC 7389, Business Services, NEC).
562211	Limited to facilities regulated under the Resource Conservation and Recovery Act.
562212	Limited to facilities regulated under the Resource Conservation and Recovery Act.
562213	Limited to facilities regulated under the Resource Conservation and Recovery Act.
562219	Limited to facilities regulated under the

	Resource Conservation and Recovery Act.
562920	Limited to facilities regulated under the Resource Conservation and Recovery Act.

Effective: 09/25/2008

R.C. 119.032 review dates: 09/25/2013

CERTIFIED ELECTRONICALLY
Certification

09/15/2008
Date

Promulgated Under: 119.03
Statutory Authority: 3751.02
Rule Amplifies: 3751.03

Chapter 3745-101: Transportation Conformity Rules

Contact: Paul Braun 614-644-3734
Paul.Braun@epa.ohio.gov

3745-101-01 **Purpose.**

[Comment: For dates of non-regulatory government publications, publications of recognized organizations and associations, federal rules, and federal statutory provisions referenced in this rule, see the last paragraph of rule 3745-101-02 of the Administrative Code titled "Incorporation by reference."]

The purpose of this chapter is to implement Section 176 (c) of the CAA the related requirements of 23 USC 109 (j), and regulations under 40 CFR Part 51, Subpart T, with respect to the conformity of transportation plans, programs, and projects which are developed, funded, or approved by the USDOT, by the Ohio DOT , and by metropolitan planning organizations or other recipients of funds under Title 23 of the United States Code or the Federal Transit Act contained in 49 USC 5303 . This chapter sets forth policy, criteria, and procedures for demonstrating and assuring conformity of such activities to this applicable implementation plan, developed and applicable pursuant to section 110 of the CAA and part D of Title I of the CAA.

Effective: 11/03/2006

R.C. 119.032 review dates: 08/16/2006 and 11/03/2011

CERTIFIED ELECTRONICALLY
Certification

10/24/2006
Date

Promulgated Under: 119.03
Statutory Authority: ORC 3704.03(E)
Rule Amplifies: ORC 3704.033, 3704.03(E)
Prior Effective Dates: 8/21/95

3745-101-02 **Definitions.**

[Comment: For dates of non-regulatory government publications, publications of recognized organizations and associations, federal rules, and federal statutory provisions referenced in this rule, see the "Incorporation by Reference" paragraph at the end of this rule.]

(A) Terms used but not defined in this chapter shall have the meaning given them by the CAA, Titles 23 and 49 of the United States Code, other USEPA regulations, other USDOT regulations, or other state or local air quality or transportation rules, in that order of priority. Except as otherwise provided in this rule, the definitions in rule 3745-15-01 of the Administrative Code shall apply to this chapter.

(B) As used in Chapter 3745-101 of the Administrative Code:

(1) "1-hour ozone NAAQS" means the one hour ozone national ambient air quality standard codified in 40 CFR 50.9.

(2) "8-hour ozone NAAQS" means the eight hour ozone national ambient air quality standard codified in 40 CFR 50.10.

(3) "Action scenario" means the future transportation system that would result from the implementation of the proposed transportation plan, program, and projects.

(4) "Applicable implementation plan" as defined in Section 302(q) of the CAA means the portion, or portions, of the state's implementation plan, or most recent revision thereof, which has been approved under Section 110 of the CAA, or promulgated under Section 110(c) of the CAA , or promulgated or approved pursuant to regulations promulgated under Section 301(d) of the CAA and which implements the relevant requirements of the CAA.

(5) "Baseline scenario" means the transportation system that would result from the continued implementation of current programs, as specified in 40 CFR 93.119.

(6) "CAA " means the Clean Air Act as amended November 15, 1990; 42 USC 7401 to 7671q. .

(7) "Cause or contribute to a new violation" for a project means:

(a) To cause or contribute to a new violation of a standard in the area substantially affected by the project or over a region which would otherwise not be in violation of the standard during the future period in question, if the project were not implemented, or

(b) To contribute to a new violation in a manner that would increase the frequency or severity of a new violation of a standard in such area.

(8) "CERCLA" means the Comprehensive Environmental Response, Compensation, and Liability Act, contained in 42 USC 9601 to 9675. .

(9) "Clean data" means air quality monitoring data determined by EPA to meet the requirements of 40 CFR Part 58 that indicate attainment of the national ambient air quality standard.

(10) "CO" means carbon monoxide.

(11) "Consultation" means that one party confers with another identified party, provides all appropriate information to that party needed for meaningful input, and prior to taking any action, considers the views of that party and, except with respect to those actions for which only notification is required and those actions subject to paragraph (C)(1)(f) of rule 3745-101-04 of the Administrative Code, responds to those views in a timely, substantive written manner prior to any final decision on such action.

(12) "Control strategy implementation plan revision" means the applicable implementation plan which contains specific strategies for controlling the emissions of and reducing ambient levels of pollutants in order to satisfy CAA requirements for demonstrations of reasonable further progress and attainment including implementation plan revisions submitted to satisfy 172(c), 182(b)(1), 182(c)(2)(A), 182(c)(2)(B), 187(a)(7), 187(g), 189(a)(1)(B), and 189(b)(1)(A) of the CAA ; and Sections 189(d), 192(a), and 192 (b) of the CAA, , for nitrogen dioxide; and any other applicable CAA provision requiring a demonstration of reasonable further progress or attainment).

(13) "Design concept" means the type of facility identified by the project, e.g., freeway, expressway, arterial highway, grade-separated highway, reserved right-of-way rail transit, mixed-traffic rail transit, exclusive busway, etc.

(14) "Design scope" means the design aspects of a facility which will affect the proposed facility's impact on regional emissions, usually as they relate to vehicle or person carrying capacity and control, e.g., number of lanes or tracks to be constructed or added, length of project, signalization, access control including approximate number and location of interchanges, preferential treatment for high occupancy vehicles, etc.

(15) "Donut areas" are geographic areas outside a metropolitan planning area boundary, but inside the boundary of a nonattainment or maintenance area that contains any part of a metropolitan area(s). These areas are not isolated rural nonattainment and maintenance areas.

(16) "EAC" means early action compact.

(17) "EMFAC" means a computer-based mathematical model used by the state of California to calculate motor vehicle emissions.

(18) "Facility" means any building, structure, roadway, installation, operation, or combination thereof.

(19) "FHWA" means the federal highway administration of USDOT.

(20) "FHWA/FTA project", for the purpose of this chapter, means any highway or transit project which is proposed to receive funding assistance and approval through the federal-aid highway program or the federal mass transit program or requires federal highway administration (FHWA) or federal transit administration (FTA) approval for some aspect of the project, such as connection to an interstate highway or deviation from applicable design standards on the interstate system.

(21) "FTA" means the federal transit administration of USDOT.

(22) "Fiscally constrained" means that full funding is reasonably anticipated to be available within the time period contemplated for completion of the projects in the transportation plan or in the transportation improvement plan in accordance with the metropolitan planning regulations at 23 CFR Part 450.

(23) "Forecast period" with respect to a transportation plan or the transportation improvement plan means the period covered by the transportation plan or the transportation improvement plan pursuant to 23 CFR Part 450.

(24) "Highway project" means an undertaking to implement or modify a highway facility or highway-related program. Such an undertaking consists of all required phases necessary for implementation. For analytical purposes, it shall be defined sufficiently to:

(a) Connect logical termini and be of sufficient length to address environmental matters on a broad scale;

(b) Have independent utility or significance, i.e., be usable and be a reasonable expenditure even if no additional transportation improvements in the area are made; and

(c) Not restrict consideration of alternatives for other reasonably foreseeable transportation improvements.

(25) "Horizon year" means a year for which the transportation plan or the transportation improvement plan describes the envisioned transportation system in accordance with 40 CFR 93.106.

(26) "Hot-spot analysis" means an estimation of likely future localized CO and PM_{10} pollutant concentrations and a comparison of those concentrations to the national ambient air quality standards. A hot-spot analysis assesses impacts on a scale smaller than the entire nonattainment or maintenance area, including, for example, congested roadway intersections and highways or transit terminals, and uses an air quality dispersion model to determine the effects of emissions on air quality.

(27) "HPMS" means highway performance monitoring system.

(28) "Incomplete data area" means any ozone nonattainment area which is classified by USEPA, as an incomplete data area, pursuant to 40 CFR Part 81.

(29) "Increase the frequency or severity" means to cause a location or region to exceed a standard more often or to cause a violation at a greater concentration than previously existed and/or would otherwise exist during the future period in question, if the project were not implemented.

(30) "Lapse" means that the conformity determination for a transportation plan or a transportation improvement plan has expired, and thus there is no currently conforming transportation plan and transportation improvement plan .

(31) "Lead agency" means the agency responsible for preparing the document, as referred to in paragraph (B)(2) of rule 3745-101-04 of the Administrative Code, unless otherwise provided by a memorandum of understanding or contract.

(32) "Isolated rural nonattainment and maintenance areas" are areas that do not contain or are not part of any metropolitan planning area as designated under the transportation planning regulations. Isolated rural areas do not have federally required metropolitan transportation plans or transportation improvement plans and do not have projects that are part of the emissions analysis of any metropolitan planning organization's metropolitan transportation plan or transportation improvement plan. Projects in such areas are instead included in statewide transportation improvement programs. These areas are not donut areas.

(33) "Level of service" is a qualitative measure describing operational conditions of traffic, generally described in terms of speed and travel time, freedom to maneuver, traffic interruptions, comfort, convenience, and safety. The following six levels of service define a facility's operating condition:

(a) Level of service A - free flow, no restrictions on operating speed.

(b) Level of service B - stable flow, few speed restrictions

(c) Level of service C - stable flow, higher volumes, some restricted speed and lane changing

(d) Level of service D - approaching unstable flow, little freedom to maneuver

(e) Level of service E - unstable flow, lower speed with some stops

(f) Level of service F - forced flow, low speed with many stops

(g) "Limited maintenance plan" is a maintenance plan that USEPA has determined meets USEPA's limited maintenance plan policy criteria for a given NAAQS and pollutant. To qualify for a limited maintenance plan, for example, an area must have a design value that is significantly below a given NAAQS, and it must be reasonable to expect that a NAAQS violation will not result from any level of future motor vehicle emissions growth.

(34) "Local air agency" means an agency that has been delegated air pollution control responsibilities by the director of the Ohio EPA pursuant to Section 3704.03 of the Revised Code.

(35) "Maintenance area" means any geographic region of the United States previously designated nonattainment pursuant to the CAA and subsequently redesignated to attainment subject to the requirement to develop a maintenance plan under Section 175 (a) of the CAA.

(36) "Maintenance plan" means an implementation plan under Section 175(a) of the CAA..

(37) "Memorandum of understanding" or "MOU" means an agreement among the agencies required to perform consultation under this chapter defining their respective responsibilities in air quality and transportation planning processes for each nonattainment area.

(38) "Metropolitan planning organization" or "MPO" means that organization designated as being responsible, together with the state, for conducting the continuing, cooperative, and comprehensive transportation planning process under 23 USC 134 and 49 USC 5303 within the MPO boundary as recognized by the governor of Ohio. It is the forum for cooperative transportation decision-making.

(39) "Milestone" has the meaning given in Sections 182(g)(1) and 189(c) of the CAA for serious and above ozone nonattainment areas and PM_{10} nonattainment areas, respectively. For all other nonattainment areas, a milestone consists of an

emissions level and the date on which that level is to be achieved as required by the applicable CAA provision for reasonable further progress towards attainment.

(40) "Motor vehicle emissions budget" means that portion of the total allowable emissions allocated by the applicable implementation plan to highway and transit vehicles. Such portion of the total allowable emissions is defined in a revision to the applicable implementation plan for a certain date for the purpose of meeting reasonable further progress milestones, or attainment or maintenance demonstrations, for any criteria pollutant or its precursors. Such portion can also be defined in an implementation plan revision which was endorsed by the governor or by the Ohio EPA, subject to a public hearing, and submitted to, but not yet approved by, the USEPA. The applicable implementation plan for an ozone nonattainment area may also designate a motor vehicle emissions budget for NOx for a reasonable further progress milestone year if the applicable implementation plan demonstrates that this NOx budget will be achieved with measures in the implementation plan (as an implementation plan shall do for VOC milestone requirements). The applicable implementation plan for an ozone nonattainment area includes a NOx budget if NOx reductions are being substituted for the reductions in VOC in milestone years which are required for reasonable further progress.

(41) "National ambient air quality standards" or "NAAQS" means those standards established pursuant to section 109 of the CAA.

(42) "NEPA" means the National Environmental Policy Act of 1969, contained in 42 USC 4321 to 4370(f).

(43) "NEPA process completion", for the purposes of this chapter, with respect to FHWA or FTA, means the point at which there is a specific action to make a formal final determination that a project is categorically excluded, to make a finding of no significant impact, or to issue a record of decision on a final environmental impact statement under NEPA.

(44) "NH_3" means ammonia.

(45) "Nonattainment area" means any geographic region of the United States which has been designated as nonattainment under Section 107 of the CAA for any pollutant for which a national ambient air quality standard exists.

(46) "Not classified area" means any carbon monoxide nonattainment area which USEPA has not classified as either moderate or serious.

(47) "NO_x" means oxides of nitrogen.

(48) "NO_2" means nitrogen dioxide.

(49) "Ohio DOT" means the Ohio department of transportation.

(50) "Ohio EPA" means the Ohio environmental protection agency.

(51) "PM_{10}" means particulate matter with an aerodynamic diameter less than or equal to ten microns.

(52) "$PM_{2.5}$" mean particulate matter with an aerodynamic diameter less than or equal to a nominal 2.5 microns.

(53) "Precursor for PM_{10}" means transportation-related emissions of volatile organic compounds and oxides of nitrogen.

(54) "Precursor for $PM_{2.5}$" means transportation-related emissions of sulfur oxides, ammonia, volatile organic compounds and oxides of nitrogen

(55) "Project" means a highway project or transit project.

(56) "Protective finding" means a determination by USEPA that the control strategy contained in a submitted control strategy implementation plan revision would have been considered approvable with respect to requirements for emissions reductions if all committed measures had been submitted in enforceable form as required by Section 110(a)(2)(A) of the CAA.

(57) "Recipient of funds designated under Title 23 of the United States Code or the Federal Transit Act" means any agency at any level of state, county, city or regional government that routinely receives Title 23 of the United States Code or Federal Transit Act funds to construct FHWA/FTA projects, operate FHWA/FTA projects or equipment, purchase equipment, or undertake other services or operations via contracts or agreements. This definition does not include private landowners or developers, or contractors or entities that are only paid for services or products created by their own employees.

(58) "Regionally significant project" means a transportation project, other than an exempt project, that is on a facility which serves regional transportation needs (such as access to and from the area outside of the region, major activity centers in the region, major planned developments such as new retail malls, sports complexes, etc., or transportation terminals as well as most terminals themselves) and would normally be included in the modeling of a metropolitan area's transportation network which shall include, at a minimum:

(a) All principal arterial highways,

(b) All fixed guideway transit facilities that offer an alternative to regional highway travel,

(c) Any project that Ohio EPA identifies as having the potential to affect air quality on a regional basis.

(59) "Rural area" means an area external to all metropolitan planning organization boundaries recognized by the governor of Ohio.

(60) "Safety margin" means the amount by which the total projected emissions from all sources of a given pollutant are less than the total emissions that would satisfy the applicable requirement for reasonable further progress, attainment, or maintenance.

(61) "SO_x" means sulfur oxides.

(62) "Standard" means a national ambient air quality standard.

(63) "State project" means any highway or transit project which is proposed to receive funding assistance or approval through any state or local transportation program.

(64) "Statewide transportation improvement program" or "STIP" means a staged, multi-year, intermodal program of transportation projects covering the state, or the nonattainment area, attainment area, or maintenance area, which is consistent with the statewide transportation plan and metropolitan transportation plans, and developed pursuant to 23 CFR Part 450.

(65) "Statewide transportation plan" means the official intermodal statewide transportation plan that is developed through the statewide planning process for the state, developed pursuant to 23 CFR Part 450.

(66) "Submarginal area" means any ozone nonattainment area which USEPA has classified as submarginal in 40 CFR Part 81.

(67) "TIP" means transportation improvement plan.

(68) "Title 23 USC" means Title 23 of the United States Code.

(69) "Transit" means mass transportation by bus, rail, or other conveyance which provides general or special service to the public on a regular and continuing basis. It does not include school buses or charter or sightseeing services.

(70) "Transit project" means an undertaking to implement or modify a transit facility or transit-related program, purchase transit vehicles or equipment, or provide financial assistance for transit operations. It does not include actions that are solely within the jurisdiction of local transit agencies, such as changes in routes,

schedules, or fares. It may consist of several phases. For analytical purposes, it shall be defined inclusively enough to:

(a) Connect logical termini and be of sufficient length to address environmental matters on a broad scope;

(b) Have independent utility or independent significance, i.e., be a reasonable expenditure even if no additional transportation improvements in the area are made; and

(c) Not restrict consideration of alternatives for other reasonably foreseeable transportation improvements.

(71) "Transitional area" means any ozone nonattainment area which USEPA has classified as transitional in 40 CFR Part 81.

(72) "Transportation control measure" or "TCM" means any measure that is specifically identified and committed to in the applicable implementation plan that is either one of the types listed in Section 08 of the CAA , or any other measure for the purpose of reducing emissions or concentrations of air pollutants from transportation sources by reducing vehicle use or changing traffic flow or congestion conditions. Notwithstanding the above, vehicle technology-based, fuel-based, and maintenance-based measures which control the emissions from vehicles under fixed traffic conditions are not TCMs for the purpose of this chapter.

(73) "Transportation improvement program" or "TIP" means a staged, multi-year, intermodal program of transportation projects covering a metropolitan planning area which is consistent with the metropolitan transportation plan, and developed pursuant to 23 CFR Part 450.

(74) "Transportation plan" means the official intermodal metropolitan transportation plan that is developed through the metropolitan planning process for the metropolitan planning area, developed pursuant to 23 CFR Part 450.

(75) "Transportation project" means a highway project or a transit project.

(76) "USDOT" means the United States department of transportation.

(77) "USEPA" means the United States environmental protection agency.

(78) "VMT" means total miles traveled by all vehicles on a given roadway.

(79) "VOC" means volatile organic compound as defined in paragraph (B)(6) of rule 3745-21-01 of the Administrative Code.

(80) "Written commitment" for the purposes of this chapter means a written commitment that includes a description of the action to be taken; a schedule for the completion of the action; a demonstration that funding necessary to implement the action has been authorized by the appropriating or authorizing body; and an acknowledgment that the commitment is an enforceable obligation under the applicable implementation plan.

(C) Incorporation by reference. This chapter includes references to certain matter or materials. The text of the incorporated materials is not included in the regulations contained in this chapter. The materials are hereby made a part of the regulations in this chapter. For materials subject to change, only the specific version specified in the regulation are incorporated. Material is incorporated as it exists on the effective date of this rule. Except for subsequent annual publication of existing (unmodified) Code of Federal Regulation compilations, any amendment or revision to a referenced document is not incorporated unless and until this rule has been amended to specify the new dates.

(1) Availability. The materials incorporated by reference are available as follows:

(a) Clean Air Act. Information and copies may be obtained by writing to: "Superintendent of Documents, Attn: New Orders, PO Box 371954, Pittsburgh, PA 15250-7954." The full text of the Act as amended in 1990 is also available in electronic format at www.epa.gov/oar/caa/. A copy of the Act is also available for inspection and copying at most public libraries and "The State Library of Ohio."

(b) Code of Federal Regulations. Information and copies may be obtained by writing to: "Superintendent of Documents, Attention: New Orders, PO Box 371954, Pittsburgh, PA 15250-7954." The full text of the CFR is also available in electronic format at www.access.gpo.gov/nara/cfr/. The CFR compilations are also available for inspection and copying at most public libraries and "The State Library of Ohio."

(c) Comprehensive Environmental Response, Compensation, and Liability Act. Information and copies may be obtained by writing to: "Superintendent of Documents, Attn: New Orders, PO Box 371954, Pittsburgh, PA 15250-7954." The full text of the Act as amended in 1980 is also available in electronic format at http://www4.law.cornell.edu/uscode/. A copy of the Act is also available for inspection and copying at most public libraries and "The State Library of Ohio."

(d) Federal Transit Act. Information and copies may be obtained by writing to: "Superintendent of Documents, Attn: New Orders, PO Box 371954, Pittsburgh, PA 15250-7954." The full text of the Act as amended in 1998 is also available in electronic format at http://www4.law.cornell.edu/uscode/.

A copy of the Act is also available for inspection and copying at most public libraries and "The State Library of Ohio."

(e) National Environmental Policy Act. Information and copies may be obtained by writing to: "Superintendent of Documents, Attn: New Orders, PO Box 371954, Pittsburgh, PA 15250-7954." A copy of the Act is also available for inspection and copying at most public libraries and "The State Library of Ohio."

(f) United States Code. Information and copies may be obtained by writing to: "Superintendent of Documents, Attn: New Orders, PO Box 371954, Pittsburgh, PA 15250-7954." The full text of the United States Code is also available in electronic format at http://www4.law.cornell.edu/uscode/. The USC compilations are also available for inspection and copying at most public libraries and "The State Library of Ohio."

(2) Incorporated materials

(a) 23 CFR Part 450; "Planning assistance and standards;" as published in the July 1, 2005 Code of Federal Regulations.

(b) 23 CFR 450.316(b); 58 FR 58064, Oct. 28, 1993, as amended at 61 FR 67175, Dec. 19, 1996.

(c) 23 CFR 450.322(c); 58 FR 58064, Oct. 28, 1993, as amended at 61 FR 67175, Dec. 19, 1996; 67 FR 62373, Oct. 7, 2002.

(d) 23 CFR 450.324(c); 58 FR 58064, Oct. 28, 1993, as amended at 61 FR 67175, Dec. 19, 1996.

(e) 23 USC 109; "Standards;" published January 19, 2004 in Supplement III of the 2000 Edition of the United States Code.

(f) 23 USC 134; "Metropolitan Planning;" published January 19, 2004 in Supplement III of the 2000 Edition of the United States Code.

(g) 40 CFR 50.9; "National 1-hour primary and secondary ambient air quality standards for ozone;" 62 FR 38894, July 18, 1997, as amended at 65 FR 45200, July 20, 2000; 68 FR 38163, June 26, 2003, 69 FR 23996, Apr. 30, 2004.

(h) 40 CFR 50.10; "National 8-hour primary and secondary ambient air quality standards for ozone;" 62 FR 38894, July 18, 1997.

(i) 40 CFR 51.390; "Implementation plan revision;" 62 FR 43801, Aug. 15, 1997.

(j) 40 CFR Part 51, Subpart T; "Conformity to State or Federal Implementation Plans of Transportation Plans, Programs, and Projects Developed, Funded or Approved Under Title 23 U.S.C. or the Federal Transit Laws;" 62 FR 43801, Aug. 15, 1997.

(k) 40 CFR Part 58; "Ambient Air Quality Surveillance;" as published in the July 1, 2005 Code of Federal Regulations.

(l) 40 CFR Part 81; "Designation of Areas for Air Quality Planning Purposes;" as published in the July 1, 2005 Code of Federal Regulations.

(m) 40 CFR 93.104; "Frequency of conformity determinations;" 62 FR 43801, Aug. 15, 1997, as amended at 67 FR 50817, Aug. 6, 2002; 69 FR 40072, July 1, 2004.

(n) 40 CFR 93.105; " Consultation;" 62 FR 43801, Aug. 15, 1997, as amended at 69 FR 40073, July 1, 2004; 70 FR 24291, May 6, 2005.

(o) 40 CFR 93.105(c)(1)(i); "Consultation;" 62 FR 43801, Aug. 15, 1997, as amended at 69 FR 40073, July 1, 2004; 70 FR 24291, May 6, 2005.

(p) 40 CFR 93.106; "Content of transportation plans;" 62 FR 43801, Aug. 15, 1997, as amended at 69 FR 40073, July 1, 2004.

(q) 40 CFR 93.108 "Fiscal constraints for transportation plans and TIPs;" 58 FR 62235, Nov. 24, 1993.

(r) 40 CFR 93.109(l)(2)(iii); "Criteria and procedures for determining conformity of transportation plans, programs, and projects: General" 62 FR 43801, Aug. 15, 1997, as amended at 69 FR 40093, July 1, 2004.

(s) 40 CFR 93.113(c)(1); "Criteria and procedures: Timely implementation of TCMs" 62 FR 43801, Aug. 15, 1997.

(t) 40 CFR 93.116; "Criteria and procedures: Localized CO and PM10 violations (hot spots);" 69 FR 40077, July 1, 2004.

(u) 40 CFR 93.118; "Criteria and procedures: Motor vehicle emissions budget;" 62 FR 43801, Aug. 15, 1997, as amended at 69 FR 40078, July 1, 2004.

(v) 40 CFR 93.119; "Criteria and procedures: Interim emissions in areas without motor vehicle emissions budgets;" 62 FR 43801, Aug. 15, 1997, as amended at 69 FR 40079, July 1, 2004; 70 FR 24291, May 6, 2005.

(w) 40 CFR 93.121; "Requirements for adoption or approval of projects by other recipients of funds designated under title 23 USC or the Federal Transit Laws;" 62 FR 43801, Aug. 15, 1997, as amended at 69 FR 40080, July 1, 2004.

(x) 40 CFR 93.122; "Procedures for determining regional transportation-related emissions;" 62 FR 43801, Aug. 15, 1997, as amended at 69 FR 40080, July 1, 2004.

(y) 40 CFR 93.123(b); "Procedures for determining localized CO and PM_{10} concentrations (hot-spot analysis)" 58 FR 62235, Nov. 24, 1993.

(z) 40 CFR 93.126; "Exempt projects;" 62 FR 43801, Aug. 15, 1997, as amended at 69 FR 40081, July 1, 2004.

(aa) 40 CFR 93.127; "Projects exempt from regional emissions analyses;" 62 FR 43801, Aug. 15, 1997.

(bb) 42 USC 4321 to 4370f; "National Environmental Policy"; published January 19, 2004 in Supplement III of the 2000 Edition of the United States Code.

(cc) 42 USC 7401 to 7671q; "The Public Health and Welfare-Air Pollution Prevention and Control;" published January 19, 2004 in Supplement III of the 2000 Edition of the United States Code.

(dd) "Comprehensive Environmental Response, Compensation, and Liability;" contained in 42 USC 9601 to 9675; published January 19, 2004 in Supplement III of the 2000 Edition of the United States Code.

(ee) 49 CFR 7.43; " Fee schedule;" Amdt. 1, 63 FR 38331, July 16, 1998.

(ff) 49 CFR Part 613; "Planning Assistance and Standards;" 58 FR 58079, Oct. 28, 1993; 41 FR 33443, Aug. 9, 1976.

(gg) 49 USC 5303; "Metropolitan Planning;" published January 19, 2004 in Supplement III of the 2000 Edition of the United States Code.

(hh) Federal Transit Act; contained in 49 USC 53; "Mass Transportation;" published January 19, 2004 in Supplement III of the 2000 Edition of the United States Code.

(ii) Part D of Title I of the Clean Air Act; contained in 42 USC 74501 to 76515 "The Public Health and Welfare-Air Pollution Prevention and Control;" published January 19, 2004 in Supplement III of the 2000 Edition of the United States Code.

(jj) Section 107 of the Clean Air Act; contained in 42 USC 7408; "Air quality criteria and control techniques;" published January 19, 2004 in Supplement III of the 2000 Edition of the United States Code.

(kk) Section 107(d) of the Clean Air Act; contained in 42 USC 7407; "Air quality control regions;" published January 19, 2004 in Supplement III of the 2000 Edition of the United States Code.

(ll) Section 108 of the Clean Air Act; contained in 42 USC 7408; "Air quality criteria and control techniques;" published January 6, 2003 in Supplement III of the 2000 Edition of the United States Code.

(mm) Section 109 of the Clean Air Act; contained in 42 USC 7409; "National ambient air quality standards;" published January 19, 2004 in Supplement III of the 2000 Edition of the United States Code.

(nn) Section 110 of the Clean Air Act; contained in 42 USC 7410; "Implementation plans;" published January 19, 2004 in Supplement III of the 2000 Edition of the United States Code.

(oo) Section 110(a)(2)(A) of the Clean Air Act; contained in 42 USC 7410; "Implementation plans;" published January 19, 2004 in Supplement III of the 2000 Edition of the United States Code.

(pp) Section 110(c) of the Clean Air Act; contained in 42 USC 7410; "Implementation plans;" published January 19, 2004 in Supplement III of the 2000 Edition of the United States Code

(qq) Section 172(c) of the Clean Air Act; contained in 42 USC 7502; "Nonattainment plan provisions;" published January 19, 2004 in Supplement III of the 2000 Edition of the United States Code.

(rr) Section 175A of the Clean Air Act; contained in 42 USC 7505a; "Maintenance plans;" published January 19, 2004 in Supplement III of the 2000 Edition of the United States Code.

(ss) Section 176(c) of the Clean Air Act; contained in 42 USC 7506; "Limitation on certain federal assistance;" published January 19, 2004 in Supplement III of the 2000 Edition of the United States Code.

(tt) Section 182(b)(1) of the Clean Air Act; contained in 42 USC 7511a; "Plan submissions and requirements;" published January 19, 2004 in Supplement II of the 2000 Edition of the United States Code.

(uu) Section 182(c)(2)(A) of the Clean Air Act; contained in 42 USC 7511a; "Plan submissions and requirements;" published January 19, 2004 in Supplement III of the 2000 Edition of the United States Code.

(vv) Section 182(c)(2)(B) of the Clean Air Act; contained in 42 USC 7511a; "Plan submissions and requirements;" published January 19, 2004 in Supplement III of the 2000 Edition of the United States Code.

(ww) Section 182(g)(1) of the Clean Air Act; contained in 42 USC 7511a; "Plan submissions and requirements;" published January 19, 2004 in Supplement III of the 2000 Edition of the United States Code.

(xx) Section 187(a)(7) of the Clean Air Act; contained in 42 USC 7512a; " Plan submissions and requirements;" published January 19, 2004 in Supplement III of the 2000 Edition of the United States Code.

(yy) Section 187(g) of the Clean Air Act; contained in 42 USC 7512a; "Plan submissions and requirements;" published January 19, 2004 in Supplement III of the 2000 Edition of the United States Code.

(zz) Section 189(a)(1)(B) of the Clean Air Act; contained in 42 USC 7513a; "Plan provisions and schedules for plan submissions;" published January 19, 2004 in Supplement III of the 2000 Edition of the United States Code.

(aaa) Section 189(b)(1)(A) of the Clean Air Act; contained in 42 USC 7513a; "Plan provisions and schedules for plan submissions;" published January 19, 2004 in Supplement III of the 2000 Edition of the United States Code.

(bbb) Section 189(c) of the Clean Air Act; contained in 42 USC 7513a; "Plan provisions and schedules for plan submissions;" published January 19, 2004 in Supplement III of the 2000 Edition of the United States Code.

(ccc) Section 189(d) of the Clean Air Act; contained in 42 USC 7513a; "Plan provisions and schedules for plan submissions;" published January 19, 2004 in Supplement III of the 2000 Edition of the United States Code.

(ddd) Section 192(a) of the Clean Air Act; contained in 42 USC 7514a; "Attainment dates;" published January 19, 2004 in Supplement III of the 2000 Edition of the United States Code.

(eee) Section 192(b) of the Clean Air Act; contained in 42 USC 7514a; "Attainment dates;" published January 19, 2004 in Supplement III of the 2000 Edition of the United States Code.

(fff) Section 301(d) of the Clean Air Act; contained in 42 USC 7601; "Administration;" published January 19, 2004 in Supplement III of the 2000 Edition of the United States Code.

(ggg) Section 302(q) of the Clean Air Act; contained in 42 USC 7602; "Definitions;" published January 19, 2004 in Supplement III of the 2000 Edition of the United States Code.

(hhh) Title 23 of the United States Code; "Highways;" published January 19, 2004 in Supplement III of the 2000 Edition of the United States Code; as amended June 9, 1998; Pub. L. 105-178, title V, §5101(1), , 112 Stat. 422, Sept. 9, 1966, Pub. L. 89-564, title I, §102(b)(3), , 80 Stat. 735.

(iii) Title 49 of the United States Code; "Transportation;" published January 19, 2004 in Supplement III of the 2000 Edition of the United States Code.

Effective: 11/03/2006

R.C. 119.032 review dates: 08/16/2006 and 11/03/2011

CERTIFIED ELECTRONICALLY
Certification

10/24/2006
Date

Promulgated Under: 119.03
Statutory Authority: ORC 3704.03(E)
Rule Amplifies: ORC 3704.033, 3704.03(E)
Prior Effective Dates: 8/21/95, 6/19/97, 2/16/99, 9/23/02.

3745-101-03 **Applicability, priority, and frequency of conformity determinations.**

[Comment: For dates of non-regulatory government publications, publications of recognized organizations and associations, federal rules, and federal statutory provisions referenced in this rule, see the last paragraph of rule 3745-101-02 of the Administrative Code titled "Incorporation by reference."]

(A) Except as provided for in paragraph (F) of this rule or in 40 CFR 93.126, conformity determinations are required for:

(1) The adoption, acceptance, approval or support of transportation plans and transportation plan amendments developed pursuant to 23 CFR Part 450 or 49 CFR Part 613 by an MPO or Ohio DOT;

(2) The adoption, acceptance, approval or support of TIPs and TIP amendments or the STIP developed pursuant to 23 CFR Part 450 or 49 CFR Part 613 by an MPO or Ohio DOT; and

(3) The approval, funding, or implementation of FHWA/FTA projects.

(B) Conformity determinations are not required under this chapter for individual projects which are not FHWA/FTA projects. However, 40 CFR 93.121 applies to such projects if they are regionally significant.

(C) The provisions of this chapter shall apply in all nonattainment and maintenance areas for transportation-related criteria pollutants for which the area is designated nonattainment or has a maintenance plan.

(1) The provisions of this chapter apply with respect to emissions of the following criteria pollutants: ozone, CO, NO_2, PM_{10} and $PM_{2.5}$.

(2) The provisions of this chapter also apply with respect to emissions of the following precursor pollutants:

(a) VOC and NO_x in ozone areas;

(b) NO_x in NO_2 areas;

(c) VOC and/or NO_x in PM_{10} areas if the USEPA regional administrator or the director has made a finding that transportation-related precursor emissions of one or both of these precusors within the nonattainment area are a significant contributor to the PM_{10} nonattainment problem and has so notified the MPO and Ohio DOT, or if the applicable implementation plan, or implementation plan submission, establishes an approved or adequate

budget for such emissions as part of the reasonable further progress, attainment or maintenance strategy;

(d) NO_x in $PM_{2.5}$ areas, unless both the USEPA regional administrator and the director have made a finding that transportation-related emissions of NO_x within the nonattainment area are not a significant contributor to the $PM_{2.5}$ nonattainment problem and has so notified the MPO and Ohio DOT, or the applicable implementation plan, or implementation plan submission does not establish an approved or adequate budget for such emissions as part of the reasonable further progress, attainment or maintenance strategy; and

(e) VOC, SO_x and/or NH_3 in $PM_{2.5}$ areas if either the USEPA regional administrator or the director has made a finding that transportation-related emissions of any of these precursors within the nonattainment area are a significant contributor to the $PM_{2.5}$ nonattainment problem and has so notified the MPO and Ohio DOT, or if the applicable implementation plan, or implementation plan submission establishes an approved or adequate budget for such emissions as part of the reasonable further progress, attainment or maintenance strategy.

(D) The provisions of this chapter apply to $PM_{2.5}$ nonattainment and maintenance areas with respect to $PM_{2.5}$ from re-entrained road dust if the USEPA regional administrator or the director has made a finding that re-entrained road dust emissions within the area are a significant contributor to the $PM_{2.5}$ nonattainment problem and has so notified the MPO and Ohio DOT, or if the applicable implementation plan, or implementation plan submission includes re-entrained road dust in the approved or adequate budge as part of the reasonable further progress, attainment or maintenance strategy. Re-entrained road dust emissions are produced by travel on paved and unpaved roads including emissions from anti-skid and deicing materials.

(E) The provisions of this chapter apply to maintenance areas for twenty years from the date USEPA approves the area's request under Section 107 (d) of the CAA for redesignation to attainment, unless the applicable implementation plan specifies that the provisions of this chapter shall apply for more than twenty years.

(F) The following limitations shall apply to conformity determinations:

(1) Projects subject to this chapter for which the NEPA process and a conformity determination have been completed by FHWA or FTA may proceed toward implementation without further conformity determinations if one of the following major steps has occurred within the most recent four year period: NEPA process completion; start of final design; acquisition of a significant portion of the right-of-way; or approval of the plans, specifications and estimates. All phases of such projects which were considered in the conformity determination are also included, if those phases were for the purpose of funding,

final design, right-of-way acquisition, construction, or any combination of these phases.

(2) A new conformity determination for the project will be required if there is a significant change in project design concept and scope, if a supplemental environmental document for air quality purposes is initiated, or if no major steps to advance the project have occurred within the most recent four year period.

(G) Grace period for new nonattainment areas. For areas or portions of areas which have been continuously designated attainment or not designated for any NAAQS for ozone, CO, PM_{10}, $PM_{2.5}$ or NO_2 since 1990 and are subsequently redesignated to nonattainment or designated nonattainment for any NAAQS for any of these pollutants, the provisions of this chapter shall not apply with respect to that NAAQS for twelve months following the effective date of final designation to nonattainment of each NAAQS for such pollutant.

(H) When assisting or approving any action with air quality-related consequences, FHWA and FTA shall give priority to the implementation of those transportation portions of an applicable implementation plan prepared to attain and maintain the NAAQS. This priority shall be consistent with statutory requirements for allocation of funds among states or other jurisdictions.

(I) Conformity determinations and conformity redeterminations for transportation plans, TIPs, and FHWA/FTA projects shall be made according to the requirements of this rule and the applicable implementation plan.

(J) Each new transportation plan shall be found to conform, before the transportation plan is approved by the MPO or accepted by USDOT.

(1) All transportation plan revisions shall be found to conform before the transportation plan revisions are approved by MPO or accepted by USDOT, unless the revision merely adds or deletes exempt projects listed in 40 CFR 93.126 or 40 CFR 93.127 and has been made in accordance with the notification provisions of paragraph (C)(1)(f) of rule 3745-101-04 of the Administrative Code. The conformity determination shall be based on the transportation plan and the revision taken as a whole.

(2) In any case, conformity determinations shall be made no less frequently than every four years, or the existing conformity determination will lapse.

(K)

(1) A new TIP shall be demonstrated to conform, before the TIP is approved by the MPO and approved by the governor or his designee or accepted by USDOT.

(2) A TIP amendment requires a new conformity determination for the entire TIP before the amendment is approved by the MPO and approved by the governor or his designee or accepted by USDOT, unless the amendment merely adds or deletes exempt projects listed in 40 CFR 93.126 or 40 CFR 93.127 and has been made in accordance with the notification provisions of paragraph (C)(1)(f) of rule 3745-101-04 of the Administrative Code.

(3) After an MPO adopts a new or revised transportation plan, conformity of the TIP shall be redetermined by the MPO and USDOT within six months, unless the new or revised plan merely adds or deletes exempt projects listed in 40 CFR 93.126 or 40 CFR 93.127 and has been made in accordance with the notification provisions of paragraph (C)(1)(f) of rule 3745-101-04 of the Administrative Code. Otherwise, the existing conformity determination for the TIP will lapse.

(4) In any case, conformity determinations shall be made no less frequently than every four years or the existing conformity determination will lapse.

(L) FHWA/FTA projects shall be found to conform by the FHWA and FTA before they are adopted, accepted, approved, or funded. Conformity shall be redetermined for any FHWA/FTA project if one of the following occurs: a significant change in the project's design concept and scope; three years elapse since the most recent major step to advance the project; or initiation of a supplemental environmental document for air quality purposes. Major steps include: NEPA process completion; start of final design; acquisition of a significant portion of the right-of-way; and, construction including federal approval of the plans, specifications and estimates.

Effective: 11/03/2006

R.C. 119.032 review dates: 08/16/2006 and 11/03/2011

CERTIFIED ELECTRONICALLY
Certification

10/24/2006
Date

Promulgated Under: 119.03
Statutory Authority: ORC 3704.03(E)
Rule Amplifies: ORC 3704.033, 3704.33(E)
Prior Effective Dates: 8/21/95, 6/19/97, 2/16/99.

3745-101-04 **Consultation.**

[Comment: For dates of non-regulatory government publications, publications of recognized organizations and associations, federal rules, and federal statutory provisions referenced in this rule, see the last paragraph of rule 3745-101-02 of the Administrative Code titled "Incorporation by reference."]

(A) This rule provides procedures for federal, state and local interagency consultation, and resolution of conflicts, and public consultation. Public consultation procedures will be developed in accordance with the requirements for public involvement in 23 CFR Part 450.

(1) Such consultation procedures shall be undertaken by MPOs, Ohio DOT, and USDOT with Ohio EPA and local air agencies and USEPA before making conformity determinations, and by Ohio EPA and local air agencies and USEPA with MPOs, the Ohio DOT, and USDOT in developing applicable implementation plans.

(2) Before this chapter is approved by USEPA, MPOs before making any conformity determinations shall provide reasonable opportunity for consultation with Ohio EPA, local air and transportation agencies, Ohio DOT, USDOT, and USEPA, including consultation on the issues described in paragraph (C)(1) of this rule.

(B) Interagency consultation procedures: general factors.

(1) Representatives of the MPOs, Ohio EPA, local air agencies, and Ohio DOT and local transportation agencies shall undertake an interagency consultation process in accordance with this rule with each other and with local or regional offices of USEPA, FHWA, and FTA on the development of the implementation plan, of the list of TCMs in the applicable implementation plan, of the transportation plan, of the TIP, of the STIP and of the statewide transportation plan, of any revisions to the preceding documents, and of all conformity determinations required by this chapter.

(2)

(a) Ohio EPA shall be the lead agency responsible for preparing the final document or decision and for assuring the adequacy of the interagency consultation process with respect to the development of applicable implementation plans and control strategy implementation plan revisions and the list of TCMs in the applicable implementation plan.

(b) The respective MPO shall be the lead agency responsible for preparing the final document or decision and for assuring the adequacy of the interagency consultation process with respect to the development of the transportation

plan, the TIP, and any amendments or revisions thereto. The respective MPO shall be the lead agency responsible for preparing the final document or decision and for assuring the adequacy of the interagency consultation process with respect to any determinations of conformity under this rule for which the MPO is responsible.

(c) In the case of non-metropolitan areas, Ohio DOT shall be the lead agency responsible for preparing the final document or decision and for assuring the adequacy of the interagency consultation process with respect to the development of the statewide transportation plan, the STIP, and any amendments or revisions thereto.

(3) In addition to the lead agencies identified in paragraphs (B)(2)(a) and (B)(2)(b) of this rule, other agencies entitled to participate in any interagency consultation process under this rule include Ohio DOT (headquarters and each affected regional or district office), each affected MPO, the FHWA regional office and state division, the FTA regional office, Ohio EPA, and local air agencies, and in interstate nonattainment areas and interstate maintenance areas the state and local transportation agencies and state and local air quality agencies from the states in the interstate nonattainment area and interstate maintenance area.

(4)

(a) It shall be the role and responsibility of each lead agency in an interagency consultation process, as specified in paragraphs (B)(2)(a) and (B)(2)(b) of this rule, to confer with all other agencies identified under paragraph (B)(3) of this rule with an interest in the document to be developed; provide all appropriate information to those agencies needed for meaningful input; solicit early and continuing input from those agencies; conduct the consultation process described in the applicable portions of paragraph (B) of this rule, where required; assure policy-level contact with those agencies; consider the views of each such agency and respond to those views in a timely, substantive written manner prior to any final decision on such document; and assure that such views and written response are made part of the record of any decision or action.

(b) It shall be the role and responsibility of each agency specified in paragraph (B)(3) of this rule, when not fulfilling the role and responsibilities of a lead agency, to confer with the lead agency and other participants in the consultation process; review and comment as appropriate (including comments in writing) on all proposed and final documents and decisions in a timely manner; attend consultation and decision meetings; assure policy-level contact with other participants; provide input on any area of substantive expertise or responsibility, including planning assumptions, modeling, information on status of TCM implementation, and interpretation of regulatory or other requirements; and provide technical assistance to the

lead agency or consultation process in accordance with this paragraph when requested.

(5) Specific roles and responsibilities of various participants in the interagency consultation process shall be as follows:

(a) Ohio EPA, unless another agency is identified via a MOU or contract with Ohio EPA, shall be responsible for developing:

(i) Emissions inventories,

(ii) Emissions budgets,

(iii) Air quality modeling,

(iv) Attainment demonstrations,

(v) Control strategy implementation plan revisions,

(vi) Regulatory TCMs, and

(vii) Updated motor vehicle emissions factors.

(b) The respective MPO shall be responsible for:

(i) Developing transportation plans and TIPs,

(ii) Evaluating TCM transportation impacts,

(iii) Developing transportation and socioeconomic data and planning assumptions for use in air quality analysis to determine conformity of transportation plans, TIPs, and projects, and providing such data and planning assumptions to other agencies for air quality analysis,

(iv) Monitoring regionally significant projects,

(v) Developing system- or facility-based or other programmatic (non-regulatory) TCMs,

(vi) Providing technical and policy input on emissions budgets,

(vii) Performing transportation modeling, regional emissions analyses and documentation of timely implementation of TCMs needed for conformity assessments, or providing Ohio DOT with the data for this purpose,

(viii) And making conformity determinations on transportation plans, TIPs, and projects.

(c) The Ohio DOT shall be responsible for:

(i) Developing the statewide transportation plan and STIP,

(ii) Performing transportation modeling for MPOs as agreed to by the MPO,

(iii) Providing technical input on proposed revisions to motor vehicle emissions factors,

(iv) Distributing draft and final project environmental documents to other agencies,

(v) Convening air quality technical review meetings on specific projects when requested by other agencies or as needed,

(vi) And coordinating the conformity process and making conformity determinations for rural nonattainment areas.

(d) FHWA and FTA shall be responsible for:

(i) Assuring timely action on final findings of conformity, after consultation with other agencies as provided in this rule and 40 CFR section 51.402,

(ii) Providing guidance on conformity and the transportation planning process to agencies in interagency consultation.

(e) USEPA shall be responsible for:

(i) Reviewing and approving updated motor vehicle emissions factors,

(ii) Providing guidance on conformity criteria and procedures to agencies in interagency consultation,

(iii) Reviewing conformity findings.

(6) It shall be the affirmative responsibility of the lead agency to initiate the process by preparing an initial draft of the document, together with necessary supporting information; notifying other potential participants in the consultation process; circulating the draft document to those expressing an interest in participating; and convening consultation meetings early in the process of decision on the final document. Such lead agency shall convene technical meetings as necessary, and assure that all relevant documents and information are supplied to all participants in the consultation process in a timely manner.

(a) Regular consultation on major activities such as the development of an implementation plan or any control strategy implementation plan revision, the development of a transportation plan, the development of a TIP, or any determination of conformity on transportation plans or TIPs, shall include meetings beginning no later than three months prior to the date a final document is required (or the date on which such agency begins its own work on such document, if later). Representatives at the policy level of each agency shall receive adequate notice of such meetings. In addition, technical meetings shall be convened as necessary.

(b) Each lead agency with the responsibility for preparing the final document subject to the interagency consultation process shall confer with all other agencies identified under paragraphs (B)(1) to (B)(5) of this rule with an interest in the document to be developed, provide all appropriate information to those agencies needed for meaningful input, and, prior to taking any action, consider the views of each such agency and respond to those views in a timely, substantive written manner prior to any final decision on such document. Such views and written response shall be made part of the record of any decision or action.

(7) Within sixty days of adopting or approving a document or making a determination, each lead agency subject to an interagency consultation process under this rule, including any federal agency, shall provide each final document that is the product of such consultation process, including applicable implementation plans or implementation plan revisions, transportation plans, TIPs, and determinations of conformity, together with all supporting information, to each other agency that has participated in the consultation process. Any such agency may supply a checklist of available supporting information, which such other participating agencies may use to request all or part of such supporting information, in lieu of generally distributing all supporting information.

(8) A meeting that is scheduled or required for another purpose may be used for the purposes of consultation if the conformity consultation purpose is identified in the public notice for the meeting.

(C) Interagency consultation procedures: specific processes.

(1) An interagency consultation process in accordance with paragraph (B) of this rule involving the MPO, Ohio EPA and local air agencies, Ohio DOT and local transportation agencies, USEPA, and USDOT shall be undertaken for the following:

(a) Evaluating and choosing each model, or models, and associated methods and assumptions to be used in hot-spot analyses and regional emissions

analyses, including VMT forecasting, to be initiated by the lead agency and conducted in accordance with paragraph (B)(6) of this rule;

(b) Determining which minor arterials and other transportation projects, in addition to those functionally classified as principal arterial or higher or fixed guideway systems or extensions that offer an alternative to regional highway travel, should be considered "regionally significant" for the purposes of regional emissions analysis, and which projects should be considered to have a significant change in design concept and scope from the transportation plan or TIP. This consultation process is to be initiated by the lead agency and conducted in accordance with paragraph (B)(6) of this rule;

(c) Evaluating whether projects otherwise exempted from meeting the requirements of this chapter, according to 40 CFR 93.126 and 40 CFR 93.127, should be treated as non-exempt in cases where potential adverse emissions impacts may exist for any reason. This consultation process is to be initiated by the lead agency and conducted in accordance with paragraph (B)(6) of this rule;

(d) Making a determination, as required by 40 CFR 93.113(c)(1), whether past obstacles to implementation of TCMs which are behind the schedule established in the applicable implementation plan have been identified and are being overcome, and whether state and local agencies with influence over approvals or funding for TCMs are giving maximum priority to approval or funding for TCMs. This consultation process is to be initiated by the lead agency and conducted in accordance with paragraph (B)(6) of this rule. This consultation process shall also consider whether delays in TCM implementation necessitate revisions to the applicable implementation plan to remove TCMs or substitute TCMs or other emission reduction measures;

(e) Identifying, as required by 40 CFR 93.123(b), projects located at sites in PM_{10} nonattainment areas with vehicle and roadway emission and dispersion characteristics which are essentially identical to those at sites with violations verified by monitoring, and which therefore require quantitative PM_{10} hot-spot analysis. This consultation process is to be initiated by the lead agency and conducted in accordance with paragraph (B)(6) of this rule;

(f) Receiving notification of transportation plan or TIP revisions or amendments which merely add or delete exempt projects listed in 40 CFR 93.126 or 40 CFR 93.127 , to be initiated by the lead agency and conducted in accordance with paragraph (B)(6) of this rule, other than the requirement that such notice be provided prior to final action;

(g) Choosing conformity tests and methodologies for isolated rural nonattainment and maintenance areas, as required by 40 CFR 93.109(l)(2)(iii).

(2) An interagency consultation process in accordance with paragraph (B) of this rule involving the MPO, Ohio EPA and local air agencies, Ohio DOT and local transportation agencies, shall be undertaken for the following:

(a) Evaluating events which will trigger new conformity determinations in addition to those triggering events established in 40 CFR 93.104. This consultation process is to be initiated by the lead agency and conducted in accordance with paragraph (B)(6) of this rule; and

(b) Consulting on emissions analysis for transportation activities which cross the borders of MPOs or nonattainment areas or air basins. This consultation process is to be initiated by the lead agency and conducted in accordance with paragraph (B)(6) of this rule.

(3) Where the metropolitan planning area does not include the entire nonattainment or maintenance area, an interagency consultation process in accordance with paragraph (B) of this rule involving the MPOs and Ohio DOT shall be undertaken for cooperative planning and analysis for purposes of determining conformity of all projects outside the metropolitan area and within the nonattainment or maintenance area. This consultation process is to be initiated by the lead agency and conducted in accordance with paragraph (B)(6) of this rule.

(4) A process involving all entities pursuing non-federally funded regionally significant projects (including local transportation agencies) to ensure that plans for construction of regionally significant projects which are not FHWA/FTA projects (including projects for which alternative locations, design concept and scope, or the no-build option are still being considered), including those by recipients of funds designated under Title 23 USC or the federal transit laws, are disclosed to the MPO on a regular basis, and to ensure that any changes to those plans are immediately disclosed.

(5) An interagency consultation process, in accordance with paragraph (B) of this rule, involving the MPO and other recipients of funds designated under Title 23 USC or the Federal Transit Act shall be undertaken for assuming the location and design concept and scope of projects which are disclosed to the MPO, as required by paragraph (C)(4) of this rule, but whose sponsors have not yet decided these features, in sufficient detail to perform the regional emissions analysis according to the requirements of 40 CFR 93.122. This consultation process is to be initiated by the lead agency and conducted in accordance with paragraph (B)(6) of this rule.

(6) An interagency consultation process, in accordance with paragraph (B) of this rule, involving the MPO, Ohio EPA and local air agencies, Ohio DOT and local transportation agencies, shall be undertaken for the design, schedule, and funding of research and data collection efforts and regional transportation model development by the MPO (e.g., household/travel transportation surveys). This consultation process is to be initiated by the lead agency and conducted in accordance with paragraph (B)(6) of this rule.

(7) A process for providing final documents (including applicable implementation plans and implementation plan revisions) and supporting information to each agency after approval or adoption. This process is applicable to all agencies described in paragraph (A)(1) of this rule, including federal agencies.

(D) Resolving conflicts.

(1) Any conflict concerning conformity process among state agencies or between state agencies and an MPO shall be submitted for resolution to the governor if the conflict cannot be resolved by the heads of the involved agencies. Before submittal to the governor, such agencies shall make every effort to resolve any differences, including personal meetings between the heads of such agencies or their policy-level representatives, to the extent possible.

(2) Ohio EPA has fourteen calendar days to appeal a proposed determination of conformity, or other policy decision under this chapter, to the governor after Ohio DOT or MPO has notified Ohio EPA of the resolution of all comments on such proposed determination of conformity or policy decision.

(a) Such fourteen day period shall commence when the MPO or Ohio DOT has confirmed receipt by the director of Ohio EPA of the resolution of the comments of Ohio EPA. If Ohio EPA appeals to the governor, the final conformity determination shall have the concurrence of the governor. Ohio EPA shall provide notice of any appeal under this paragraph to the MPO and Ohio DOT. If Ohio EPA does not appeal to the governor within fourteen days, the MPO or Ohio DOT may proceed with the final conformity determination.

(b) In the case of any comments with regard to findings of fiscal constraint under 40 CFR 93.108 or to the air quality effects of any proposed determination of conformity, Ohio DOT has fourteen calendar days to appeal a proposed determination of conformity, or other policy decision under this chapter, to the governor after the MPO has notified Ohio EPA or Ohio DOT of the resolution of all comments on such proposed determination of conformity or policy decision. Such fourteen day period shall commence when the MPO has confirmed receipt by the director of the Ohio EPA or Ohio DOT of the resolution of the comments of Ohio DOT. If Ohio DOT appeals to the governor, the final conformity determination

shall have the concurrence of the governor. Ohio DOT shall provide notice of any appeal under paragraph (D) of this rule to the MPO and Ohio EPA. If Ohio DOT does not appeal to the governor within fourteen days, the MPO may proceed with the final conformity determination.

(3) The governor may delegate the role of hearing any such appeal under paragraph (D) of this rule and of deciding whether to concur in the conformity determination to another official or agency within the state, but not to the head or staff of Ohio EPA or to any local air agency, to Ohio DOT, to a state transportation commission or board, to any agency that has responsibility for only one of these functions, or to an MPO.

(E) Public consultation procedures.

(1) Affected agencies making conformity determinations on transportation plans, programs, and projects shall establish and continuously implement a proactive public involvement process which provides opportunity for public review and comment and by, at a minimum, providing reasonable public access to technical and policy information considered by the agency at the beginning of the public comment period and prior to taking formal action on a conformity determination for all transportation plans and TIPs, consistent with the requirements of 23 CFR Part 450, including 23 CFR 450.316(b), 23 CFR 450.322(c), and 23 CFR 450.324(c) as in effect on the effective date of this chapter. Any charges imposed for public inspection and copying should be no more stringent than with the fee schedule contained in 49 CFR 7.43.

(2) In addition, any such agency shall specifically address in writing all public comments that known plans for a regionally significant project which is not receiving FHWA or FTA funding or approval have not been properly reflected in the emissions analysis supporting a proposed conformity finding for a transportation plan or TIP.

(3) Any such agency shall also provide opportunity for public involvement in conformity determinations for projects to the extent otherwise required by law, e.g. NEPA. The opportunity for public involvement provided under this paragraph shall include access to information, emissions data, analyses, models and modeling assumptions used to perform a conformity determination, and the obligation of any such agency to consider and respond to significant comments. No transportation plan, TIP, or project may be found to conform unless the conformity determination has been subject to a public involvement process in accordance with this paragraph, without regard to whether the USDOT has certified any process under 23 CFR Part 450.

Effective: 11/03/2006

R.C. 119.032 review dates: 08/16/2006 and 11/03/2011

CERTIFIED ELECTRONICALLY
Certification

10/24/2006
Date

Promulgated Under: 119.03
Statutory Authority: ORC 3704.03(E)
Rule Amplifies: ORC 3704.033, 3704.03(E)
Prior Effective Dates: 8/21/85, 6/19/97, 2/16/99

3745-101-05 **Procedures for determining regional transportation-related emissions.**

[Comment: For dates of non-regulatory government publications, publications of recognized organizations and associations, federal rules, and federal statutory provisions referenced in this rule, see the last paragraph of rule 3745-101-02 of the Administrative Code titled "Incorporation by reference."]

(A) General requirements.

(1) The regional emissions analysis required by 40 CFR 93.118 and 40 CFR 93.119 for the transportation plan, TIP, or project not from a conforming plan and TIP must include all regionally significant projects expected in the nonattainment or maintenance area. The analysis must include FHWA/FTA projects proposed in the transportation plan and TIP and all other regionally significant projects which the are disclosed to the MPO as required by 40 CFR 93.105. Projects which are not regionally significant are not required to be explicitly modeled, but vehicle miles traveled (VMT) from such projects must be estimated in accordance with reasonable professional practice. The effects of TCMs and similar projects that are not regionally significant may also be estimated in accordance with reasonable professional practice.

(2) The emissions analysis may not include for emissions reduction credit any TCMs or other measures in the applicable implementation plan which have been delayed beyond the scheduled date(s) until such time as their implementation has been assured. If the measure has been partially implemented and it can be demonstrated that it is providing quantifiable emission reduction benefits, the emissions analysis may include that emissions reduction credit.

(3) Emissions reduction credit from projects, programs, or activities which require a regulatory action in order to be implemented may not be included in the emissions analysis unless:

(a) The regulatory action is already adopted by the enforcing jurisdiction;

(b) The project, program, or activity is included in the applicable implementation plan;

(c) The control strategy implementation plan submission or maintenance plan submission that establishes the motor vehicle emissions budget(s) for the purposes of 40 CFR 93.118 contains a written commitment to the project, program, or activity by the agency with authority to implement it; or

(d) USEPA has approved an opt-in to a federally enforced program, USEPA has promulgated the program (if the control program is a federal responsibility,

such as vehicle tailpipe standards), or the CAA requires the program without need for individual state action and without any discretionary authority for USEPA to set its stringency, delay its effective date, or not implement the program.

(4) Emissions reduction credit from control measures that are not included in the transportation plan and TIP and that do not require a regulatory action in order to be implemented may not be included in the emissions analysis unless the conformity determination includes written commitments to implementation from the appropriate entities.

(a) Persons or entities voluntarily committing to control measures must comply with the obligations of such commitments.

(b) The conformity implementation plan revision required in 40 CFR 51.390 must provide that written commitments to control measures that are not included in the transportation plan and TIP must be obtained prior to a conformity determination and that such commitments must be fulfilled.

(5) A regional emissions analysis for the purpose of satisfying the requirements of 40 CFR 93.119 must make the same assumptions in both the "baseline" and "action" scenarios regarding control measures that are external to the transportation system itself, such as vehicle tailpipe or evaporative emission standards, limits on gasoline volatility, vehicle inspection and maintenance programs, and oxygenated or reformulated gasoline or diesel fuel.

(6) The ambient temperatures used for the regional emissions analysis must be consistent with those used to establish the emissions budget in the applicable implementation plan. All other factors, for example the fraction of travel in a hot stabilized engine mode, must be consistent with the applicable implementation plan, unless modified after interagency consultation according to 40 CFR 93.105(C)(1)(i) to incorporate additional or more geographically specific information or represent a logically estimated trend in such factors beyond the period considered in the applicable implementation plan.

(7) Reasonable methods must be used to estimate nonattainment or maintenance area VMT on off-network roadways within the urban transportation planning area, and on roadways outside the urban transportation planning area.

(B) Regional emissions analysis in serious, severe, and extreme ozone nonattainment areas and serious CO nonattainment areas must meet the requirements of paragraphs (B)(1) to (B)(3) of this rule if their metropolitan planning area contains an urbanized area population over two hundred thousand.

(1) Estimates of regional transportation-related emissions used to support conformity determinations must be made at a minimum using network-based travel models

according to procedures and methods that are available and in practice and supported by current and available documentation. These procedures, methods, and practices are available from DOT and will be updated periodically.

Agencies must discuss these modeling procedures and practices through the interagency consultation process, as required by 40 CFR 93.105. Network-based travel models must at a minimum satisfy the following requirements:

(a) Network-based travel models must be validated against observed counts (peak and off-peak, if possible) for a base year that is not more than ten years prior to the date of the conformity determination. Model forecasts must be analyzed for reasonableness and compared to historical trends and other factors, and the results must be documented;

(b) Land use, population, employment, and other network-based travel model assumptions must be documented and based on the best available information;

(c) Scenarios of land development and use must be consistent with the future transportation system alternatives for which emissions are being estimated. The distribution of employment and residences for different transportation options must be reasonable;

(d) A capacity-sensitive assignment methodology must be used, and emissions estimates must be based on a methodology which differentiates between peak and off-peak link volumes and speeds and uses speeds based on final assigned volumes;

(e) Zone-to-zone travel impedances used to distribute trips between origin and destination pairs must be in reasonable agreement with the travel times that are estimated from final assigned traffic volumes. Where use of transit currently is anticipated to be a significant factor in satisfying transportation demand, these times should also be used for modeling mode splits; and

(f) Network-based travel models must be reasonably sensitive to changes in the time(s), cost(s), and other factors affecting travel choices.

(2) Reasonable methods in accordance with good practice must be used to estimate traffic speeds and delays in a manner that is sensitive to the estimated volume of travel on each roadway segment represented in the network-based travel model.

(3) Highway performance monitoring system (HPMS) estimates of vehicle miles traveled (VMT) must be considered the primary measure of VMT within the portion of the nonattainment or maintenance area and for the functional classes of roadways included in HPMS, for urban areas which are sampled on a separate urban area basis. For areas with network-based travel models, a factor (or

factors) may be developed to reconcile and calibrate the network-based travel model estimates of VMT in the base year of its validation to the HPMS estimates for the same period. These factors may then be applied to model estimates of future VMT. In this factoring process, consideration will be given to differences between HPMS and network-based travel models, such as differences in the facility coverage of the HPMS and the modeled network description. Locally developed count- based programs and other departures from these procedures are permitted subject to the interagency consultation procedures of 40 CFR 93.105(c)(1)(i).

(C) Two-year grace period for regional emissions analysis requirements in certain ozone and CO areas. The requirements of paragraph (B) of this rule apply to such areas or portions of such areas that have not previously been required to meet these requirements for any existing NAAQS two years from the following:

(1) The effective date of USEPA's reclassification of an ozone or CO nonattainment area that has an urbanized area population greater than two hundred thousand to serious or above;

(2) The official notice by the United States census bureau that determines the urbanized area population of a serious or above ozone or CO nonattainment area to be greater than two hundred thousand; or

(3) The effective date of USEPA's action that classifies newly designated ozone or CO nonattainment area population greater than two hundred thousand as serious or above.

(D) In all areas not otherwise subject to paragraph (B) of this rule, regional emissions analyses must use those procedures described in paragraph (B) of this rule if the use of those procedures has been the previous practice of the MPO. Otherwise, areas not subject to paragraph (B) of this rule may estimate regional emissions using any appropriate methods that account for VMT growth by, for example, extrapolating historical VMT or projecting future VMT by considering growth in population and historical growth trends for VMT per person. These methods must also consider future economic activity, transit alternatives, and transportation system policies.

(E) PM_{10} from construction-related fugitive dust.

(1) For areas in which the implementation plan does not identify construction-related fugitive PM_{10} as a contributor to the nonattainment problem, the fugitive PM_{10} emissions associated with highway and transit project construction are not required to be considered in the regional emissions analysis.

(2) In PM_{10} nonattainment and maintenance areas with implementation plans which identify construction-related fugitive PM_{10} as a contributor to the nonattainment problem, the regional PM_{10} emissions analysis must consider construction-

related fugitive PM_{10} and must account for the level of construction activity, the fugitive PM_{10} control measures in the applicable implementation plan, and the dust-producing capacity of the proposed activities.

(F) $PM_{2.5}$ from construction-related fugitive dust.

(1) For $PM_{2.5}$ areas in which the implementation plan does not identify construction-related fugitive $PM_{2.5}$ as a significant contributor to the nonattainment problem, the fugitive $PM_{2.5}$ emissions associated with highway and transit project construction are not required to be considered in the regional emissions analysis.

(2) In $PM_{2.5}$ nonattainment and maintenance areas with implementation plans which identify construction-related fugitive $PM_{2.5}$ as a significant contributor to the nonattainment problem, the regional $PM_{2.5}$ emissions analysis shall consider construction-related fugitive $PM_{2.5}$ and shall account for the level of construction activity, the fugitive $PM_{2.5}$ control measures in the applicable implementation plan, and the dust-producing capacity of the proposed activities.

(G) Reliance on previous regional emissions analysis.

(1) Conformity determinations for a new transportation plan and/or TIP may be demonstrated to satisfy the requirements of 40 CFR 93.118 "Criteria and procedures: Motor vehicle emissions budget" or 40 CFR 93.119 "Criteria and procedures: Interim emissions in areas without motor vehicle emissions budgets" without new regional emissions analysis if the regional emissions analysis already performed for the plan also applies to the TIP. This requires a demonstration that:

(a) The new plan and/or TIP contain all projects which must be started in the plan and TIP's timeframes in order to achieve the highway and transit system envisioned by the transportation plan;

(b) All plan and TIP projects which are regionally significant are included in the transportation plan with design concept and scope adequate to determine their contribution to the transportation plan's regional emissions at the time of the transportation plan's conformity determination;

(c) The design concept and scope of each regionally significant project in the new plan and/or TIP are not significantly different from that described in the transportation plan; and

(d) The previous regional emissions analysis is consistent with the requirements of 40 CFR 93.118 (including that conformity to all currently applicable budgets is demonstrated) and/or 40 CFR 93.119 as applicable.

(2) A project which is not from a conforming transportation plan and a conforming TIP may be demonstrated to satisfy the requirements of 40 CFR 93.118 or 40 CFR 93.119 without additional regional emissions analysis if allocating funds to the project will not delay the implementation of projects in the transportation plan or TIP which are necessary to achieve the highway and transit system envisioned by the transportation plan, and if the project is either:

(a) Not regionally significant; or

(b) Included in the conforming transportation plan (even if it is not specifically included in the latest conforming TIP) with design concept and scope adequate to determine its contribution to the transportation plan's regional emissions at the time of the transportation plan's conformity determination, and the design concept and scope of the project is not significantly different from that described in the transportation plan.

(3) A conformity determination that relies on paragraph (G) of this rule does not satisfy the frequency requirements of paragraph (J) or (K) of rule 3745-101-03 of the Administrative Code.

Replaces: 3745-101-14

Effective: 11/03/2006

R.C. 119.032 review dates: 11/03/2011

CERTIFIED ELECTRONICALLY
Certification

10/24/2006
Date

Promulgated Under: 119.03
Statutory Authority: ORC 3704.03(E)
Rule Amplifies: ORC 3704.033, 3704.03(E)
Prior Effective Dates: 8/21/95, 2/16/99

3745-101-06 **Enforceability of design concept and scope and project-level mitigation and control measures.**

[Comment: For dates of non-regulatory government publications, publications of recognized organizations and associations, federal rules, and federal statutory provisions referenced in this rule, see the last paragraph of rule 3745-101-02 of the Administrative Code titled "Incorporation by reference."]

(A) Prior to determining that a transportation project is in conformity, the MPO, other recipient of funds designated under Title 23 USC or the Federal Transit Act, the FHWA, or FTA shall obtain, from the project sponsor or operator, enforceable written commitments to implement in the construction of the project and operation of the resulting facility or service, any project-level mitigation or control measures which are identified as conditions for NEPA process completion with respect to local PM_{10} or CO impacts. Before making conformity determinations, enforceable written commitments shall also be obtained for project-level mitigation or control measures which are conditions for making conformity determinations for a transportation plan or TIP and included in the project design concept and scope which is used in the regional emissions analysis required by 40 CFR 93.118 "Criteria and procedures: Motor vehicle emissions budget" and 40 CFR 93.119 "Criteria and procedures: Interim emissions in areas without motor vehicle emissions budgets" or used in the project-level hot-spot analysis required by 40 CFR 93.116.

(B) Project sponsors voluntarily committing to mitigation measures to facilitate positive conformity determinations shall provide enforceable written commitments and shall comply with the obligations of such commitments.

(C) Enforceable written commitments to mitigation or control measures shall be obtained prior to a positive conformity determination, and project sponsors shall comply with such commitments.

(D) If the MPO or project sponsor believes the mitigation or control measure is no longer necessary for conformity, then the project sponsor or operator may be relieved of its obligation to implement the mitigation or control measure if it can demonstrate that the applicable hot-spot requirements of 40 CFR 93.116, the emission budget requirements of 40 CFR 93.118, and emission reduction requirements of 40 CFR 93.119 are satisfied without the mitigation or control measure, and so notifies the agencies involved in the interagency consultation process required under rule 3745-101-04 of the Administrative Code. The MPO and USDOT shall confirm that the transportation plan and TIP still satisfy the requirements of 40 CFR 93.118 and/or 40 CFR 93.119, that the project still satisfies the requirements of 40 CFR 93.116, and that the conformity determinations for the transportation plan, TIP, and project are therefore still valid. This finding is subject to the applicable public consultation requirements in paragraph (E) of rule 3745-101-04 of the Administrative Code for conformity determinations for projects.

Replaces: 3745-101-17

Effective: 11/03/2006

R.C. 119.032 review dates: 11/03/2011

CERTIFIED ELECTRONICALLY
Certification

10/24/2006
Date

Promulgated Under: 119.03
Statutory Authority: ORC 3704.03(E)
Rule Amplifies: ORC 3704.033, 3704.03(E)
Prior Effective Dates: 8/21/95, 2/16/99

Chapter 3745-102: General Conformity Rules

Contact: Paul Braun 614-644-3734
Paul.Braun@epa.ohio.gov

3745-102-01 **Purpose.**

[Comment: For dates of non-regulatory government publications, publications of recognized organizations and associations, federal rules, and federal statutory provisions referenced in this rule, see the last paragraph of rule 3745-102-02 of the Administrative Code titled "Incorporation by reference."]

(A) The purpose of this chapter is to implement Section 176(c) of the CAA and regulations under 40 CFR Part 51, Subpart W, with respect to the conformity of general federal actions to the applicable implementation plan. Under those authorities, no department, agency or instrumentality of the federal government shall engage in, support in any way or provide financial assistance for, license or permit, or approve any activity which does not conform to an applicable implementation plan. This chapter sets forth policy, criteria, and procedures for demonstrating and assuring conformity of such actions to the applicable implementation plan.

(B) Under Section 176(c) of the CAA and 40 CFR Part 51, Subpart W, a federal agency shall make a determination that a federal action conforms to the applicable implementation plan in accordance with the requirements of this chapter before the action is taken.

(C) The preceding sentence does not include federal actions where either:

(1) A National Environmental Policy Act of 1969 analysis was completed as evidenced by a final environmental assessment, environmental impact statement, or finding of no significant impact that was prepared prior to January 31, 1994; or

(2)

(a) Prior to January 31, 1994, an environmental assessment was commenced or a contract was awarded to develop the specific environmental analysis;

(b) Sufficient environmental analysis is completed by March 15, 1994, so that a federal agency may determine that the federal action is in conformity with the specific requirements and the purposes of the applicable implementation plan pursuant to the agency's affirmative obligation under Section 176(c) of the CAA; and

(c) A written determination of conformity under Section 176(c) of the CAA has been made by the federal agency responsible for the federal action by March 15, 1994.

(D) Notwithstanding any provision of this chapter, a determination that an action is in conformity with the applicable implementation plan does not exempt the action from

any other requirements of the applicable implementation plan, the National Environmental Policy Act of 1969, or the CAA.

Effective: 11/03/2006

R.C. 119.032 review dates: 08/16/2006 and 11/03/2011

CERTIFIED ELECTRONICALLY
Certification

10/24/2006
Date

Promulgated Under: 119.03
Statutory Authority: ORC 3704.03(E)
Rule Amplifies: ORC 3704.033, 3704.03(E)
Prior Effective Dates: 8/21/95

3745-102-02 **Definitions.**

[Comment: For dates of non-regulatory government publications, publications of recognized organizations and associations, federal rules, and federal statutory provisions referenced in this rule, see the "Incorporation by Reference" paragraph at the end of this rule.]

(A) Terms used but not defined in this chapter shall have the meaning given them by the CAA and USEPA's regulations, in that order of priority. Except as otherwise provided in this rule, the definitions in rule 3745-15-01 of the Administrative Code shall apply to this chapter.

(B) As used in Chapter 3745-102 of the Administrative Code:

(1) "Affected federal land manager" means the federal agency or the federal official charged with direct responsibility for management of an area designated as Class I under 42 USC 7472 that is located within one hundred kilometers of the proposed federal action.

(2) "Applicable implementation plan" means the portion or portions of the state's implementation plan, or most recent revision thereof, which has been approved under Section 110 of the CAA , or promulgated under Section 110(c) of the CAA , or promulgated or approved pursuant to regulations promulgated under Section 301(d) of the CAA and which implements the relevant requirements of the CAA.

(3) "Areawide air quality modeling analysis" means an assessment on a scale that includes the entire nonattainment or maintenance area, which uses an air quality dispersion model to determine the effects of emissions on air quality.

(4) "CAA " means the Clean Air Act as amended November 15, 1990; 42 USC 7401 to 7671q. .

(5) "Cause or contribute to a new violation" means a federal action that:

(a) Causes a new violation of a national ambient air quality standard at a location in a nonattainment or maintenance area which would otherwise not be in violation of the standard during the future period in question if the federal action were not taken; or

(b) Contributes, in conjunction with other reasonably foreseeable actions, to a new violation of a national ambient air quality standard at a location in a nonattainment or maintenance area in a manner that would increase the frequency or severity of the new violation.

(6) "Caused by", as used in the terms "direct emissions" and "indirect emissions," means emissions that would not otherwise occur in the absence of the federal action.

(7) "CERCLA" means the Comprehensive Environmental Response, Compensation, and Liability Act, contained in 42 USC 9601 to 9675. .

(8) "CO" means carbon monoxide.

(9) "Criteria pollutant or standard" means any pollutant for which there is an established national ambient air quality standard at 40 CFR Part 50.

(10) "Direct emissions" means those emissions of a criteria pollutant or its precursors that are caused or initiated by the federal action and occur at the same time and place as the action.

(11) "Emergency" means a situation where extremely quick action on the part of the federal agencies involved is needed and where the timing of such federal activities makes it impractical to meet the requirements of this chapter, such as natural disasters like hurricanes or earthquakes, civil disturbances such as terrorist acts, and military mobilizations.

(12) "Emissions budgets" means those portions of the total allowable emissions defined in a USEPA-approved revision to the applicable implementation plan for a certain date for the purpose of meeting reasonable further progress milestones or attainment or maintenance demonstrations, for any criteria pollutant or its precursors, specifically allocated by the applicable implementation plan to mobile sources, to any stationary source or class of stationary sources, to any federal action or class of action, to any class of area sources, or to any subcategory of the emissions inventory. The allocation system shall be specific enough to assure meeting the criteria of Section 176(c)(1)(B) of the CAA. An emissions budget may be expressed in terms of an annual period, a daily period, or other period established in the applicable implementation plan.

(13) "Emission offsets" for the purposes of paragraph (B) of rule 3745-102-05 of the Administrative Code, means emissions reductions which are quantifiable, consistent with the applicable implementation plan attainment and reasonable further progress demonstrations, surplus to reductions required by and credited to other applicable implementation plan provisions, enforceable under both state and federal law, and permanent within the time frame specified by the program. Emissions reductions intended to be achieved as emissions offsets under this chapter shall be monitored and enforced in a manner equivalent to that under USEPA's new source review requirements.

(14) "Emissions that a federal agency has a continuing program responsibility for" means emissions that are specifically caused by an agency carrying out its authorities, and does not include emissions that occur due to subsequent activities, unless such activities are required by the federal agency. Where an agency, in performing its normal program responsibilities, takes actions itself or imposes conditions that result in air pollutant emissions by a non-federal entity taking subsequent actions, such emissions are covered by the meaning of a continuing program responsibility.

(15) "Facility" means any building, structure, roadway, installation, operation, or combination thereof.

(16) "Federal action" means any activity engaged in by a department, agency or instrumentality of the federal government, or any activity that a department, agency or instrumentality of the federal government supports in any way, provides financial assistance for, licenses, permits, or approves, other than activities related to transportation plans, programs, and projects developed, funded, or approved under Title 23 of the United States Code or the Federal Transit Act, contained in 49 USC 53. Where the federal action is a permit, license, or other approval for some aspect of a non-federal undertaking, the relevant activity is the part, portion, or phase of the non-federal undertaking that requires the federal permit, license, or approval.

(17) "Federal agency" means, for purposes of this chapter, a federal department, agency, or instrumentality of the federal government to the extent that it is engaging in, supporting in any way or providing financial assistance for, licensing or permitting, or approving an action in the state of Ohio.

(18) "Increase the frequency or severity of any existing violation of any standard in any area" means to cause a nonattainment area to exceed a standard more often, or to cause a violation at a greater concentration than previously existed or would otherwise exist during the future period in question if the project were not implemented.

(19) "Indirect emissions" means those emissions of a criteria pollutant or its precursors that:

(a) Are caused by the federal action, but may occur later in time or may be farther removed in distance from the action itself but are still reasonably foreseeable; and

(b) The federal agency can practicably control and will maintain control over due to a continuing program responsibility of the federal agency.

(20) "Local air agency" means an agency that has been delegated air pollution control responsibilities by the director pursuant to Section 3704.03 of the Revised Code.

(21) "Local air quality modeling analysis" means an assessment of localized impacts on a scale smaller than the entire nonattainment or maintenance area, including, for example, congested roadway intersections and highways or transit terminals, which uses an air quality dispersion model to determine the effects of emissions on air quality.

(22) "Maintenance area" means any geographic region of the United States previously designated nonattainment pursuant to the CAA and subsequently redesignated to attainment subject to the requirement to develop a maintenance plan under Section 175A of the CAA.

(23) "Maintenance plan" means a revision to the applicable implementation plan, meeting the requirements of Section 175A of the CAA.

(24) "Metropolitan planning organization" or "MPO" means that organization designated as being responsible, together with the state, for conducting the continuing, cooperative, and comprehensive planning process under 23 USC 134 and 49 USC 5303 within the MPO boundary as recognized by the governor of Ohio.

(25) "Milestone" has the meaning given in Sections 182(g)(1) and 189(c)(1) of the CAA. A milestone consists of an emissions level and the date on which it is required to be achieved.

(26) "National ambient air quality standards" or "NAAQS" means those standards established pursuant to Section 109 of the CAA and include standards for CO, Pb, NO_2, ozone, PM_{10} and SO_2 .

(27) "NEPA" means the National Environmental Policy Act of 1969, contained in 42 USC 4321 to 4370(f).

(28) "Nonattainment area" or "NAA" means any geographic area of the United States which has been designated as nonattainment under Section 107 of the CAA and described in 40 CFR Part 81.

(29) "NO_x" means oxides of nitrogen.

(30) "NO_2" means nitrogen dioxide.

(31) "Pb" means lead.

(32) "PM_{10}" means particulate matter with an aerodynamic diameter less than or equal to ten microns.

(33) "Precursors of a criteria pollutant" means:

(a) For ozone: NO_x, unless an area is exempted from NO_x requirements under Section 182(f) of the CAA, and volatile organic compounds (VOC); and

(b) For PM_{10}: those pollutants described in the PM_{10} nonattainment area applicable implementation plan as significant contributors to the PM_{10} levels.

(34) "Reasonably foreseeable emissions" means projected future indirect emissions that are identified at the time the conformity determination is made; the location of such emissions is known to the extent adequate to determine the impact of such emissions; and the emissions are quantifiable, as described and documented by the federal agency based on its own information and after reviewing any information presented to the federal agency.

(35) "Regionally significant action" means a federal action for which the direct and indirect emissions of any pollutant represent ten per cent or more of a nonattainment or maintenance area's emissions inventory for that pollutant.

(36) "Regional water or wastewater projects" include construction, operation, and maintenance of water or wastewater conveyances, water or wastewater treatment facilities, and water storage reservoirs which affect a large portion of a nonattainment or maintenance area.

(37) "Total of direct and indirect emissions" means the sum of direct and indirect emissions increases and decreases caused by the federal action; i.e., the "net" emissions considering all direct and indirect emissions. The portion of emissions which are exempt or presumed to conform under paragraph (C), (D), (E) or (F) of rule 3745-102-03 of the Administrative Code are not included in the "total of direct and indirect emissions" except as provided in paragraph (J) of rule 3745-102-03 of the Administrative Code. The "total of direct and indirect emissions" includes emissions of criteria pollutants and emissions of precursors of criteria pollutants. The segmentation of projects for conformity analyses when emissions are reasonably foreseeable is not permitted by this chapter.

(38) "USEPA" means the United States environmental protection agency.

(39) "VOC" means volatile organic compound as defined in paragraph (B)(6) of rule 3745-21-01 of the Administrative Code.

(C) Incorporation by reference. This chapter includes references to certain matter or materials. The text of the incorporated materials is not included in the regulations

contained in this chapter. The materials are hereby made a part of the regulations in this chapter. For materials subject to change, only the specific version specified in the regulation are incorporated. Material is incorporated as it exists on the effective date of this rule. Except for subsequent annual publication of existing (unmodified) Code of Federal Regulation compilations, any amendment or revision to a referenced document is not incorporated unless and until this rule has been amended to specify the new dates.

(1) Availability. The materials incorporated by reference are available as follows:

(a) Clean Air Act. Information and copies may be obtained by writing to: "Superintendent of Documents, Attn: New Orders, PO Box 371954, Pittsburgh, PA 15250-7954." The full text of the Act as amended in 1990 is also available in electronic format at www.epa.gov/oar/caa/. A copy of the Act is also available for inspection and copying at most public libraries and "The State Library of Ohio."

(b) Code of Federal Regulations. Information and copies may be obtained by writing to: "Superintendent of Documents, Attention: New Orders, PO Box 371954, Pittsburgh, PA 15250-7954." The full text of the CFR is also available in electronic format at www.access.gpo.gov/nara/cfr/. The CFR compilations are also available for inspection and copying at most public libraries and "The State Library of Ohio."

(c) Compilation of air pollutant emission factors, AP-42. Information and copies may be obtained by writing to: "Superintendent of Documents, Attn: New Orders, PO Box 371954, Pittsburgh, PA 15250-7954." The full text of the compilation of air pollutant emission factors, AP-42, is also available in electronic format at http://www.epa.gov/ttn/chief/ap42/index.html. The compilation of air pollutant emission factors, AP-42, are also available for inspection and copying at most public libraries and "The State Library of Ohio."

(d) Comprehensive Environmental Response, Compensation, and Liability Act. Information and copies may be obtained by writing to: "Superintendent of Documents, Attn: New Orders, PO Box 371954, Pittsburgh, PA 15250-7954." The full text of the Act as amended in 1980 is also available in electronic format at http://www4.law.cornell.edu/uscode/. A copy of the Act is also available for inspection and copying at most public libraries and "The State Library of Ohio."

(e) a.Federal Register. Information and copies may be obtained by writing to: "Superintendent of Documents, Attn: New Orders, PO Box 371954, Pittsburgh, PA 15250-7954." It is also available in electronic format at http://www.gpoaccess.gov/nara/index.html. A copy of the Register is also

available for inspection and copying at most public libraries and "The State Library of Ohio."

(f) Federal Transit Act. Information and copies may be obtained by writing to: "Superintendent of Documents, Attn: New Orders, PO Box 371954, Pittsburgh, PA 15250-7954." The full text of the Act as amended in 1998 is also available in electronic format at http://www4.law.cornell.edu/uscode/. A copy of the Act is also available for inspection and copying at most public libraries and "The State Library of Ohio."

(g) National Environmental Policy Act. Information and copies may be obtained by writing to: "Superintendent of Documents, Attn: New Orders, PO Box 371954, Pittsburgh, PA 15250-7954." A copy of the Act is also available for inspection and copying at most public libraries and "The State Library of Ohio."

(h) United States Code. Information and copies may be obtained by writing to: "Superintendent of Documents, Attn: New Orders, PO Box 371954, Pittsburgh, PA 15250-7954." The full text of the United States Code is also available in electronic format at http://www4.law.cornell.edu/uscode/. The USC compilations are also available for inspection and copying at most public libraries and "The State Library of Ohio."

(2) Incorporated materials

(a) 23 USC 134; "Metropolitan Planning;" published January 19, 2004 in Supplement III of the 2000 Edition of the United States Code; as amended August 10, 2005; Pub. L. 109-59, Sec. 6001(a), 119 Stat. 1839.

(b) 40 CFR Part 50; "National primary and secondary ambient air quality standards;" as published in the July 1, 2005 Code of Federal Regulations.

(c) 40 CFR Part 51, Appendix W; "Guideline on Air Quality Models;" 70 FR 68228, November 9, 2005.

(d) 40 CFR Part 51, Subpart W; "Determining Conformity of General Federal Actions to State or Federal Implementation Plans;" 58 FR 63247, Nov. 30, 1993.

(e) 40 CFR Part 81; "Designation of areas for air quality planning purposes;" as published in the July 1, 2005 Code of Federal Regulations.

(f) 40 CFR Part 93, Subpart A; "Conformity to State or Federal Implementation Plans of Transportation Plans, Programs, and Projects Developed, Funded or Approved Under Title 23 U.S.C. or the Federal Transit Laws;" as published in the July 1, 2005 Code of Federal Regulations.

(g) 42 USC 4321 to 4370f; "National environmental policy;" published January 19, 2004 in Supplement III of the 2000 Edition of the United States Code.

(h) 42 USC 7401 to 7671q; "Air Pollution Prevention and Control;" published January 19, 2004 in Supplement III of the 2000 Edition of the United States Code.

(i) 42 USC 7472; "Initial classifications;" published January 19, 2004 in Supplement III of the 2000 Edition of the United States Code.

(j) 49 USC 5303; "Metropolitan Planning;" published January 19, 2004 in Supplement III of the 2000 Edition of the United States Code; as amended August 10, 2005; Pub. L. 109-59, Sec. 6001(a), 119 Stat. 1839.

(k) "Comprehensive environmental response, compensation, and liability;" contained in 42 USC 9601 to 9675; published January 19, 2004 in Supplement III of the 2000 Edition of the United States Code.

(l) Federal Transit Act, contained in 49 USC 53; "Mass Transportation;" published January 19, 2004 in Supplement III of the 2000 Edition of the United States Code; as amended August 10, 2005, L. 109-59.

(m) National Environmental Policy Act of 1969; contained in 42 USC 55; "National Environmental Policy;" published January 19, 2004 in Supplement III of the 2000 Edition of the United States Code.

(n) Part C of Title I, of the Clean Air Act; contained in 42 USC 7470 to 7492 "Prevention of significant deterioration of air quality;" published January 19, 2004 in Supplement II of the 2000 Edition of United States Code.

(o) Part D of the Clean Air Act; contained in 42 USC 7501 to 7515; "Plan Requirements for Non Attainment Areas;" published January 19, 2004 in Supplement III of the 2000 Edition of the United States Code; as amended August 10, 2005, Pub. L. 109-59, sec. 6011(a)-(f), 119 Stat. 1878-1881.

(p) Section 107 of the Clean Air Act; contained in 42 USC 7408;" Air quality criteria and control techniques;" published January 19, 2004 in Supplement III of the 2000 Edition of the United States Code.

(q) Section 109 of the Clean Air Act; contained in 42 USC 7409;" National Ambient Air Quality Standards;" published January 19, 2004 in Supplement III of the 2000 Edition of the United States Code.

(r) Section 110 of the Clean Air Act; contained in 42 USC 7410;" Implementation plans;" published January 19, 2004 in Supplement III of the 2000 Edition of the United States Code.

(s) Section 110(c) of the Clean Air Act; contained in 42 USC 7410;" Implementation plans;" published January 19, 2004 in Supplement III of the 2000 Edition of the United States Code.

(t) Section 110(k)(5) of the Clean Air Act, contained in 42 USC 7410;" Implementation plans;" published January 19, 2004 in Supplement III of the 2000 Edition of the United States Code.

(u) Section 173 of the Clean Air Act; contained in 42 USC 7503;" Permit requirements;" published January 19, 2004 in Supplement III of the 2000 Edition of the United States Code.

(v) Section 174 of the Clean Air Act; contained in 42 USC 7504; " Planning procedures;" published January 19, 2004 in Supplement III of the 2000 Edition of the United States Code.

(w) Section 175A of the Clean Air Act; contained in 42 USC 7505a;" Maintenance plans;" published January 19, 2004 in Supplement III of the 2000 Edition of the United States Code.

(x) Section 176(c) of the Clean Air Act; contained in 42 USC 7506;" Limitation on certain federal assistance;" published January 19, 2004 in Supplement III of the 2000 Edition of the United States Code.

(y) Section 176(c)(1)(B) of the Clean Air Act; contained in 42 USC 7506;" Limitation on certain federal assistance;" published January 19, 2004 in Supplement III of the 2000 Edition of the United States Code.

(z) Section 182(g)(1) of the Clean Air Act; contained in 42 USC 7511a; "Plan submissions and requirements;" published January 19, 2004 in Supplement III of the 2000 Edition of the United States Code.

(aa) Section 182(f) of the Clean Air Act; contained in 42 USC 7511a; "Plan submissions and requirements;" published January 19, 2004 in Supplement III of the 2000 Edition of the United States Code.

(bb) Section 189(c)(1) of the Clean Air Act; contained in 42 USC 7513a;" Plan provisions and schedules for plan submissions;" published January 19, 2004 in Supplement III of the 2000 Edition of the United States Code.

(cc) Section 301(d) of the Clean Air Act; contained in 42 USC 7601;" Administration;" published January 19, 2004 in Supplement III of the 2000 Edition of the United States Code.

(dd) Title 23 of the United States Code; "Highways;" published January 19, 2004 in Supplement III of the 2000 Edition of the United States Code, as amended June 9, 1998; Pub. L. 105-178, title V, §5101(1), , 112 Stat. 422, Sept. 9, 1966, Pub. L. 89-564, title I, §102(b)(3), , 80 Stat. 735.

(ee) Title 49 of the United States Code; "Transportation;" published January 19, 2004 in Supplement III of the 2000 Edition of the United States Code.

Effective: 11/03/2006

R.C. 119.032 review dates: 08/16/2006 and 11/03/2011

CERTIFIED ELECTRONICALLY
Certification

10/24/2006
Date

Promulgated Under: 119.03
Statutory Authority: ORC 3704.03(E)
Rule Amplifies: ORC 3704.033, 3704.03(E)
Prior Effective Dates: 8/21/95

3745-102-03 **Applicability.**

[Comment: For dates of non-regulatory government publications, publications of recognized organizations and associations, federal rules, and federal statutory provisions referenced in this rule, see the last paragraph of rule 3745-102-02 of the Administrative Code titled "Incorporation by reference."]

(A) Conformity determinations for federal actions related to transportation plans, programs, and projects developed, funded, or approved under Title 23 of the United States Code or the Federal Transit Act, contained in 49 USC 5303 shall meet the procedures and criteria of Chapter 3745-101 of the Administrative Code, in lieu of the procedures set forth in this chapter.

(B) For federal actions not covered by paragraph (A) of this rule, a conformity determination by the federal agency taking the action for which the conformity determination is being made is required for each pollutant where the total of direct and indirect emissions in a nonattainment or maintenance area caused by a federal action would equal or exceed any of the rates in paragraph (B)(1) or (B)(2) of this rule.

(1) For purposes of paragraph (B) of this rule, the following rates apply in NAA's:

--

Pollutant	Tons/Year
Ozone (VOC or NO_x)	
Serious NAAs	50
Severe NAAs	25
Extreme NAAs	10
Other ozone NAAs outside an ozone transport region	100
Marginal and moderate NAAs inside an ozone transport region	
VOC	50
NO_x	100
Carbon monoxide	
All NAAs	100
SO_2 or NO_2	
All NAAs	100
PM_{10}	
Moderate NAAs	100
Serious NAAs	70
Pb	
All NAAs	25

(2) For purposes of paragraph (B) of this rule, the following rates apply in maintenance areas:

--

Pollutant	Tons/Year
Ozone (NO_x), SO_2 or NO_2	
All maintenance areas	100
Ozone (VOC)	
Maintenance areas inside an ozone transport region	50
Maintenance areas outside an ozone transport region	100
Carbon monoxide	
All maintenance areas	100
PM_{10}	
All maintenance areas	100
Pb	
All maintenance areas	25

(C) The requirements of this chapter shall not apply to:

(1) Actions where the total of direct and indirect emissions are below the emissions levels specified in paragraph (B) of this rule.

(2) The following actions which would result in no emissions increase or an increase in emissions that is clearly de minimis:

(a) Judicial and legislative proceedings.

(b) Continuing and recurring activities such as permit renewals where activities conducted will be similar in scope and operation to activities currently being conducted.

(c) Rulemaking and policy development and issuance;

(d) Routine maintenance and repair activities, including repair and maintenance of administrative sites, roads, trails, and facilities.

(e) Civil and criminal enforcement activities, such as investigations, audits, inspections, examinations, prosecutions, and the training of law enforcement personnel.

(f) Administrative actions such as personnel actions, organizational changes, debt management or collection, cash management, internal agency audits, program budget proposals, and matters relating to the administration and collection of taxes, duties and fees.

(g) The routine, recurring transportation of materiel and personnel.

(h) Routine movement of mobile assets, such as ships and aircraft, in home port reassignments and stations (when no new support facilities or personnel are required) to perform as operational groups or for repair or overhaul.

(i) Maintenance dredging and debris disposal where no new depths are required, applicable permits are secured, and disposal will be at an approved disposal site.

(j) With respect to existing structures, properties, facilities and lands where future activities conducted will be similar in scope and operation to activities currently being conducted at the existing structures, properties, facilities, and lands, actions such as relocation of personnel, disposition of federally-owned existing structures, properties, facilities, and lands, rent subsidies, operation and maintenance cost subsidies, the exercise of receivership or conservatorship authority, assistance in purchasing structures, and the production of coins and currency.

(k) The granting of leases, licenses such as for exports and trade, permits, and easements where activities conducted will be similar in scope and operation to activities currently being conducted.

(l) Planning, studies, and provision of technical assistance.

(m) Routine operation of facilities, mobile assets and equipment.

(n) Transfers of ownership, interests, and titles in land, facilities, and real and personal properties, regardless of the form or method of the transfer.

(o) The designation of empowerment zones, enterprise communities, or viticultural areas.

(p) Actions by any of the federal banking agencies or the federal reserve banks, including actions regarding charters, applications, notices, licenses, the supervision or examination of depository institutions or depository institution holding companies, access to the discount window, or the provision of financial services to banking organizations or to any department, agency or instrumentality of the United States.

(q) Actions by the board of governors of the federal reserve system or any federal reserve bank to effect monetary or exchange rate policy.

(r) Actions that implement a foreign affairs function of the United States.

(s) Actions, or portions thereof, associated with transfers of land, facilities, title, and real properties through an enforceable contract or lease agreement where the delivery of the deed is required to occur promptly after a specific, reasonable condition is met, such as promptly after the land is certified as meeting the requirements of CERCLA, and where the federal agency does not retain continuing authority to control emissions associated with the lands, facilities, title, or real properties.

(t) Transfers of real property, including land, facilities, and related personal property from a federal entity to another federal entity and assignments of real property, including land, facilities, and related personal property from a federal entity to another federal entity for subsequent deeding to eligible applicants.

(u) Actions by the department of the treasury to effect fiscal policy and to exercise the borrowing authority of the United States.

(3) The following actions where the emissions are not reasonably foreseeable:

(a) Initial outer continental shelf lease sales which are made on a broad scale and are followed by exploration and development plans on a project level.

(b) Electric power marketing activities that involve the acquisition, sale and transmission of electric energy.

(4) Individual actions which implement a decision to conduct or carry out a program that has been found to conform to the applicable implementation plan, such as prescribed burning actions which are consistent with a land management plan that has been found to conform to the applicable implementation plan. Such land management plan shall have been found to conform within the past five years.

(D) Notwithstanding the other requirements of this chapter, a conformity determination is not required for the following federal actions, or portion thereof:

(1) The portion of an action that includes major new or modified stationary sources that require a permit under the new source review program pursuant to Section 173 of the CAA or the prevention of significant deterioration program under Part C of Title I of the CAA.

(2) Actions in response to emergencies or natural disasters such as hurricanes, earthquakes, etc., which are commenced on the order of hours or days after the emergency or disaster and, if applicable, which meet the requirements of paragraph (E) of this rule.

(3) Research, investigations, studies, demonstrations, or training, other than those exempted under paragraph (C)(2) of this rule, where no environmental detriment

is incurred or the particular action furthers air quality research, as determined by the Ohio EPA, which is responsible for the applicable implementation plan.

(4) Alteration and additions of existing structures as specifically required by new or existing applicable environmental legislation or environmental regulations e.g., hush houses for aircraft engines and scrubbers for air emissions.

(5) Direct emissions from remedial and removal actions carried out under CERCLA and associated regulations to the extent such emissions either comply with the substantive requirements of the prevention of significant deterioration/new source review permitting program or are exempted from other environmental regulation under the provisions of CERCLA and applicable regulations issued under CERCLA.

(E) Federal actions which are part of a continuing response to an emergency or disaster under paragraph (D)(2) of this rule and which are to be taken more than six months after the commencement of the response to the emergency or disaster under paragraph (D)(2) of this rule are exempt from the requirements of this chapter only if:

(1) The federal agency taking the actions makes a written determination that, for a specified period not to exceed an additional six months, it is impractical to prepare the conformity analyses which would otherwise be required and the actions cannot be delayed due to overriding concerns for public health and welfare, national security interests and foreign policy commitments; or

(2) For actions which are to be taken after those actions covered by paragraph (E)(1) of this rule, the federal agency makes a new determination as provided in paragraph (E)(1) of this rule.

(F) Notwithstanding other requirements of this chapter, individual actions or classes of actions specified by individual federal agencies that have met the criteria set forth in either paragraph (G)(1) or (G)(2) of this rule and the procedures set forth in paragraph (H) of this rule are presumed to conform, except as provided in paragraph (J) of this rule.

(G) The federal agency shall meet the criteria for establishing activities that are presumed to conform by fulfilling the requirements set forth in either paragraph (G)(1) or (G)(2) of this rule:

(1) The federal agency shall clearly demonstrate, using methods consistent with this chapter, that the total of direct and indirect emissions from the type of activities which would be presumed to conform would not:

(a) Cause or contribute to any new violation of any standard in any area;

(b) Interfere with provisions in the applicable implementation plan for maintenance of any standard;

(c) Increase the frequency or severity of any existing violation of any standard in any area; or

(d) Delay timely attainment of any standard or any required interim emission reductions or other milestones in any area including, where applicable, emission levels specified in the applicable implementation plan for purposes of:

(i) A demonstration of reasonable further progress;

(ii) A demonstration of attainment; or

(iii) A maintenance plan; or

(2) The federal agency shall provide documentation that the total of direct and indirect emissions from such future actions would be below the emission rates for a conformity determination that are established in paragraph (B) of this rule, based, for example, on similar actions taken over recent years.

(H) In addition to meeting the criteria for establishing exemptions set forth in paragraph (G)(1) or (G)(2) of this rule, the following procedures shall also be complied with to presume that activities will conform:

(1) The federal agency shall identify through publication in the Federal Register its list of proposed activities that are presumed to conform and the basis for the presumptions;

(2) The federal agency shall notify the appropriate USEPA regional office(s), Ohio EPA and local air agencies and, where applicable, the agency designated under Section 174 of the CAA and the MPO and provide at least thirty days for the public to comment on the list of proposed activities presumed to conform;

(3) The federal agency shall document its response to all the comments received and make the comments, response, and final list of activities available to the public upon request; and

(4) The federal agency shall publish the final list of such activities in the Federal Register.

(I) Notwithstanding the other requirements of this chapter, when the total of direct and indirect emissions of any pollutant from a federal action does not equal or exceed the rates specified in paragraph (B) of this rule, but represents ten per cent or more of a nonattainment or maintenance area's total emissions of that pollutant, the action is

defined as a regionally significant action and the requirements of rule 3745-102-01 and of paragraph (B) of rule 3745-102-04 to rule 3745-102-06 of the Administrative Code shall apply for the federal action.

(J) Where an action presumed to be de minimis under paragraph (C)(1) or (C)(2) of this rule or otherwise presumed to conform under paragraph (F) of this rule is a regionally significant action or where an action otherwise presumed to conform under paragraph (F) of this rule does not in fact meet one of the criteria in paragraph (G)(1) of this rule, that action shall not be considered de minimis or presumed to conform and the requirements of rule 3745-102-01 and of paragraph (B) of rule 3745-102-04 to rule 3745-102-06 of the Administrative Code shall apply for the federal action.

(K) The provisions of this chapter shall apply in all nonattainment and maintenance areas.

Effective: 11/03/2006

R.C. 119.032 review dates: 08/16/2006 and 11/03/2011

CERTIFIED ELECTRONICALLY
Certification

10/24/2006
Date

Promulgated Under: 119.03
Statutory Authority: ORC 3704.03(E)
Rule Amplifies: ORC 3704.033, 3704.03(E)
Prior Effective Dates: 8/21/95

3745-102-04 **Conformity analysis, reporting requirements, public participation and consultation.**

[Comment: For dates of non-regulatory government publications, publications of recognized organizations and associations, federal rules, and federal statutory provisions referenced in this rule, see the last paragraph of rule 3745-102-02 of the Administrative Code titled "Incorporation by reference."]

(A) Any federal department, agency, or instrumentality of the federal government taking an action subject to 40 CFR Part 51, Subpart W and this chapter shall make its own conformity determination consistent with the requirements of this chapter. In making its conformity determination, a federal agency shall consider comments from any interested parties. Where multiple federal agencies have jurisdiction for various aspects of a project, a federal agency may choose to adopt the analysis of another federal agency, to the extent that the proposed action and impacts analyzed are the same as the project for which a conformity determination is required, or to develop its own analysis in order to make its conformity determination.

(B) A federal agency making a conformity determination under paragraph (B) of rule 3745-102-05 of the Administrative Code shall:

(1) Provide to the appropriate USEPA regional office(s), to Ohio EPA and local air agencies and, where applicable, to affected federal land managers, to the agency designated under Section 174 of the CAA, and to the MPO, a thirty-day notice which describes the proposed action and the federal agency's draft conformity determination on the action.

(2) Notify the appropriate USEPA regional office(s), Ohio EPA and local air agencies and, where applicable, affected federal land managers, the agency designated under Section 174 of the CAA, and the MPO, within thirty days after making a final conformity determination under paragraph (B) of rule 3745-102-05 of the Administrative Code.

(C) Upon request by any person regarding a specific federal action, a federal agency shall make available for review its draft conformity determination under paragraph (B) of rule 3745-102-05 of the Administrative Code with supporting materials which describe the analytical methods, assumptions, and conclusions relied upon in making the applicability analysis and draft conformity determination. In addition, a federal agency shall:

(1) Make public its draft conformity determination under paragraph (B) of rule 3745-102-05 of the Administrative Code by placing a notice by prominent advertisement in a daily newspaper of general circulation in the areas affected by the action, and by providing thirty days for written public comment prior to taking any formal action on the draft determination. This comment period may

be concurrent with any other public involvement, such as occurs in the NEPA process.

(2) Document its response to all the comments received on its draft conformity determination under paragraph (B) of rule 3745-102-05 of the Administrative Code and make the comments and responses available, upon request by any person regarding a specific federal action, within thirty days of the final conformity determination.

(3) Make public its final conformity determination under paragraph (B) of rule 3745-102-05 of the Administrative Code for a federal action by placing a notice by prominent advertisement in a daily newspaper of general circulation in the area affected by the action within thirty days of the final conformity determination.

Effective: 11/03/2006

R.C. 119.032 review dates: 08/16/2006 and 11/03/2011

CERTIFIED ELECTRONICALLY
Certification

10/24/2006
Date

Promulgated Under: 119.03
Statutory Authority: ORC 3704.03(E)
Rule Amplifies: ORC 3704.033, 3704.03(E)
Prior Effective Dates: 8/21/95

3745-102-05 **Conformity determinations.**

[Comment: For dates of non-regulatory government publications, publications of recognized organizations and associations, federal rules, and federal statutory provisions referenced in this rule, see the last paragraph of rule 3745-102-02 of the Administrative Code titled "Incorporation by reference."]

(A) Frequency of conformity determinations.

(1) The conformity status of a federal action automatically lapses five years from the date a final conformity determination is reported under paragraph (B) of rule 3745-102-04 of the Administrative Code, unless the federal action has been completed or a continuous program has been commenced to implement that federal action within a reasonable time.

(2) Ongoing federal activities at a given site showing continuous progress are not new actions and do not require periodic redeterminations so long as the emissions associated with such activities are within the scope of the final conformity determination reported under paragraph (B) of rule 3745-102-04 of the Administrative Code.

(3) If, after the conformity determination is made, the federal action is changed so that there is an increase in the total of direct and indirect emissions above the levels in paragraph (B) of rule 3745-102-03 of the Administrative Code, then a new conformity determination is required.

(B) Criteria for determining conformity of general federal actions.

(1) The areawide and local air quality modeling analyses shall:

(a) Meet the requirements in paragraph (C) of this rule; and

(b) Show that the action does not:

(i) Cause or contribute to any new violation of any standard in any area; or

(ii) Increase the frequency or severity of any existing violation of any standard in any area.

(2) Notwithstanding any other requirements of paragraph (B) of this rule, an action subject to this chapter shall not be determined to conform to the applicable implementation plan unless the total of direct and indirect emissions from the action is in compliance or is consistent with all relevant requirements and milestones contained in the applicable implementation plan, such as elements identified as part of the reasonable further progress schedules, assumptions

specified in the attainment or maintenance demonstration, prohibitions, numerical emission limits, and work practice requirements, and such action is otherwise in compliance with all relevant requirements of the applicable implementation plan.

(3) Any analyses required under paragraph (B) of this rule shall be completed, and any mitigation requirements necessary for a finding of conformity shall be identified in compliance with rule 3745-102-06 of the Administrative Code, before the determination of conformity is made.

(4) An action required under rule 3745-102-03 of the Administrative Code to have a conformity determination for a specific pollutant will be determined to conform to the applicable implementation plan if, for each pollutant that exceeds the rates in paragraph (B) of rule 3745-102-03 of the Administrative Code or otherwise requires a conformity determination due to the total of direct and indirect emissions from the action, the action meets the requirements of paragraph (B)(2) of this rule and meets any of the following requirements:

(a) For any criteria pollutant, the total of direct and indirect emissions from the action are specifically identified and accounted for in the applicable implementation plan's attainment or maintenance demonstration;

(b) For ozone or NO_2, the total of direct and indirect emissions from the action are fully offset within the same nonattainment or maintenance area through a revision to the applicable implementation plan or a measure similarly enforceable under state and federal law that effects emission reductions so that there is no net increase in emissions of that pollutant;

(c) For any criteria pollutant, except ozone and nitrogen dioxide, the total of direct and indirect emissions from the action meet the requirements:

(i) Specified in paragraph (B)(1) of this rule, based on areawide air quality modeling analysis and local air quality modeling analysis; or

(ii) Specified in paragraph (B)(4)(e) of this rule and, for local air quality modeling analysis, the requirement of paragraph (B)(1) of this rule;

(d) For CO or PM_{10}:

(i) Where Ohio EPA determines, in accordance with paragraphs (B) and (C) of rule 3745-102-04 of the Administrative Code and consistent with the applicable implementation plan, that an areawide air quality modeling analysis is not needed, the total of direct and indirect emissions from the action meet the requirements specified in paragraph (B)(1) of this rule, based on local air quality modeling analysis; or

(ii) Where Ohio EPA determines, in accordance with paragraphs (B) and (C) of rule 3745-102-04 of the Administrative Code and consistent with the applicable implementation plan, that an areawide air quality modeling analysis is appropriate and that a local air quality modeling analysis is not needed, the total of direct and indirect emissions from the action meet the requirements specified in paragraph (B)(1) of this rule, based on areawide modeling, or meet the requirements of paragraph (B)(4)(e) of this rule; or

(e) For ozone or nitrogen dioxide, and for purposes of paragraphs (B)(4)(c)(ii) and (B)(4)(d)(ii) of this rule, each portion of the action or the action as a whole meets any of the following requirements:

(i) Where USEPA has approved a revision to an area's attainment or maintenance demonstration after 1990 and the state makes a determination as provided in paragraph (B)(4)(e)(i)(a) of this rule or where the state makes a commitment as provided in paragraph (B)(4)(e)(i)(b) of this rule. Any such determination or commitment shall be made in compliance with paragraphs (B) and (C) of rule 3745-102-04 of the Administrative Code:

(a) The total of direct and indirect emissions from the action, or portion thereof, is determined and documented by Ohio EPA to result in a level of emissions which, together with all other emissions in the nonattainment or maintenance area, would not exceed the emissions budgets specified in the applicable implementation plan.

(b) The total of direct and indirect emissions from the action, or portion thereof, is determined by Ohio EPA to result in a level of emissions which, together with all other emissions in the nonattainment or maintenance area, would exceed an emissions budget specified in the applicable implementation plan and the governor or Ohio EPA makes a written commitment to USEPA which includes the following:

(i) A specific schedule for adoption and submittal of a revision to the applicable implementation plan which would achieve the needed emission reductions prior to the time that emissions from the federal action would occur;

(ii) Identification of specific measures for incorporation into the applicable implementation plan which would result in a level of emissions which, together with all other emissions in the nonattainment or maintenance area, would not exceed any emissions budget specified in the applicable implementation plan;

(iii) A demonstration that all existing applicable implementation plan requirements are being implemented in the area for the pollutants affected by the federal action, and that local authority to implement additional requirements has been fully pursued;

(iv) A determination that the responsible federal agencies have required all reasonable mitigation measures associated with their action;

(v) Written documentation including all air quality analyses supporting the conformity determination.

(c) Where a federal agency made a conformity determination based on a state commitment under paragraph (B)(4)(e)(i)(b) of this rule, such a state commitment is automatically deemed a call for an implementation plan revision by USEPA under Section 110 (k)(5) of the CAA , effective on the date of the federal conformity determination and requiring response within eighteen months or any shorter time within which the state commits to revise the applicable implementation plan;

(ii) The action, or portion thereof, as determined by the MPO, is specifically included in a current transportation plan and transportation improvement program which have been found to conform to the applicable implementation plan under Chapter 3745-101 of the Administrative Code or 40 CFR Part 93, Subpart A;

(iii) The action, or portion thereof, fully offsets its emissions within the same nonattainment or maintenance area through a revision to the applicable implementation plan or through an equally enforceable measure that effects emission reductions equal to or greater than the total of direct and indirect emissions from the action so that there is no net increase in emissions of that pollutant;

(iv) Where USEPA has not approved a revision to the applicable implementation plan attainment or maintenance demonstration since 1990, the total of direct and indirect emissions from the action for the future years (described in paragraph (C)(4) of this rule) do not increase emissions with respect to the baseline emissions, and:

(a) The baseline emissions reflect the historical activity levels that occurred in the geographic area affected by the proposed federal action during:

(i) Calendar year 1990,

(ii) The calendar year that is the basis for the classification (or, where the classification is based on multiple years, the year that is most representative in terms of the level of activity), if a classification is promulgated in 40 CFR Part 81; or

(iii) The year of the baseline inventory in the PM_{10} applicable implementation plan;

(b) The baseline emissions are the total of direct and indirect emissions calculated for the future years (described in paragraph (C)(4) of this rule) using the historic activity levels, which are described in paragraph (B)(4)(e)(iv)(a) of this rule, and appropriate emission factors for the future years; or

(v) Where the action involves regional water or wastewater projects, such projects are sized to meet only the needs of population projections that are in the applicable implementation plan, based on assumptions regarding per capita use that are developed or approved in accordance with paragraph (C)(1) of this rule.

(C) Procedures for conformity determinations of general federal actions.

(1) The analyses required under this chapter shall be based on the latest planning assumptions.

(a) All planning assumptions shall be derived from the estimates of current and future population, employment, travel, and congestion most recently developed by the MPO (including, but not limited to, assumptions regarding per capita water and sewer use, vehicle miles traveled per capita or per household, trip generation per household, vehicle occupancy, household size, vehicle fleet mix, vehicle ownership, wood stoves per household, and the geographic distribution of population growth). The conformity determination shall also be based on the latest assumptions about current and future background concentrations and other federal actions.

(b) Any revisions to these estimates used as part of the conformity determination, including projected shifts in geographic location or level of population, employment, travel, and congestion, shall be approved by the MPO or other agency authorized to make such estimates for the area.

(2) The analyses required under this chapter shall be based on the latest and most accurate emission estimation techniques available as described below, unless such techniques are inappropriate. If such techniques are inappropriate and written approval of the USEPA regional administrator is obtained for any

modification or substitution, then they may be modified or another technique substituted on a case-by-case basis or, where appropriate, on a generic basis for a specific federal agency program.

(a) For motor vehicle emissions, the most current version of the motor vehicle emissions model specified by USEPA for use in the preparation or revision of implementation plans in the state or area shall be used for the conformity analysis as specified below:

(i) The USEPA publishes in the Federal Register a notice of availability of any new motor vehicle emissions model; and

(ii) A grace period of three months shall apply during which the motor vehicle emissions model previously specified by USEPA as the most current version may be used. Conformity analyses for which the analysis was begun during the grace period or no more than three years before the Federal Register notice of availability of the latest emission model may continue to use the previous version of the model specified by USEPA, if a final determination as to conformity is made within three years of such analysis.

(b) For non-motor vehicle sources, including stationary and area source emissions, the latest emission factors specified by USEPA in the "Compilation of Air Pollutant Emission Factors (AP-42)" shall be used for the conformity analysis unless more accurate emission data are available, such as actual stack test data from stationary sources which are part of the conformity analysis.

(3) The air quality modeling analyses required under this chapter shall be based on the applicable air quality models, data bases, and other requirements specified in the most recent version of the "Guideline on Air Quality Models" contained in 40 CFR Part 51, Appendix W, unless:

(a) The guideline techniques are inappropriate, in which case the model may be modified or another model substituted on a case-by-case basis or, where appropriate, on a generic basis for a specific federal agency program; and

(b) Written approval of the USEPA regional administrator is obtained for any modification or substitution.

(4) The analyses required under this chapter shall be based on the total of direct and indirect emissions from the action and shall reflect emission scenarios that are expected to occur under each of the following cases:

(a) The CAA mandated attainment year or, if applicable, the farthest year for which emissions are projected in the maintenance plan;

(b) The year during which the total of direct and indirect emissions from the action for each pollutant analyzed is expected to be the greatest on an annual basis; and

(c) Any year for which the applicable implementation plan specifies an emissions budget.

Effective: 11/03/2006

R.C. 119.032 review dates: 08/16/2006 and 11/03/2011

CERTIFIED ELECTRONICALLY
Certification

10/24/2006
Date

Promulgated Under: 119.03
Statutory Authority: ORC 3704.03(E)
Rule Amplifies: ORC 3704.033, 3704.03(E)
Prior Effective Dates: 8/21/95

3745-102-06 **Mitigation of air quality impacts.**

(A) Any measures that are intended to mitigate air quality impacts shall be identified in the conformity determination, including the identification and quantification of all emission reductions claimed, and the process for implementation, including any necessary funding of such measures and tracking of such emission reductions, and enforcement of such measures shall be described, including an implementation schedule containing explicit timelines for implementation.

(B) Prior to determining that a federal action is in conformity, the federal agency making the conformity determination shall obtain written commitments from the appropriate persons or agencies to implement any mitigation measures which are identified as conditions for making conformity determinations. Such written commitment shall describe such mitigation measures and the nature of the commitment, in a manner consistent with paragraph (A) of this rule.

(C) Persons or agencies voluntarily committing to mitigation measures to facilitate positive conformity determinations shall comply with the obligations of such commitments.

(D) In instances where the federal agency is licensing, permitting or otherwise approving the action of another governmental or private entity, the federal agency shall condition its approval in the conformity determination on the other entity meeting the mitigation measures set forth in the conformity determination, as provided in paragraph (A) of this rule.

(E) When necessary because of changed circumstances, mitigation measures may be modified so long as the new mitigation measures continue to support the conformity determination in accordance with this rule and with paragraphs (B) and (C) of rule 3745-102-05 of the Administrative Code. Any proposed change in the mitigation measures is subject to the reporting requirements of paragraph (B) of rule 3745-102-04 of the Administrative Code and the public participation requirements of paragraph (C) of rule 3745-102-04 of the Administrative Code.

(F) The federal agency shall obtain written commitments that mitigation measures will be implemented before the federal agency makes a determination that the project conforms and that such commitments shall be fulfilled.

(G) After this implementation plan revision is approved by USEPA, any agreements, including mitigation measures, necessary for a conformity determination will be both state and federally enforceable. Enforceability through the applicable implementation plan will apply to all persons who agree to mitigate direct and indirect emissions associated with a federal action for a conformity determination.

Effective: 11/03/2006

R.C. 119.032 review dates: 08/16/2006 and 11/03/2011

CERTIFIED ELECTRONICALLY
Certification

10/24/2006
Date

Promulgated Under: 119.03
Statutory Authority: ORC 3704.03(E)
Rule Amplifies: ORC 3704.033, 3704.03(E)
Prior Effective Dates: 8/21/95

Chapter 3745-103: Acid Rain Permits and Compliance

Contact: Dana Thompson 614-644-3701
Dana.Thompson@epa.ohio.gov

3745-103-01 **Definitions and reference to materials.**

[Comment: For dates of non-regulatory government publications, publications of recognized organizations and associations, federal rules, and federal statutory provisions referenced in this rule, see paragraph (C) of this rule titled "Reference to materials."]

(A) Except as otherwise provided in this rule, the definitions in rule 3745-15-01 of the Administrative Code shall apply to this chapter.

(B) As used in this chapter:

(1) "Acid rain compliance option" means one of the methods of compliance used by an affected unit under the acid rain program as described in a compliance plan submitted and approved in accordance with rules 3745-103-09 and 3745-103-10 of the Administrative Code, rules 3745-103-22 to 3745-103-54 of the Administrative Code, and 40 CFR Part 76.

(2) "Acid rain emissions limitation" means:

(a) For the purposes of sulfur dioxide emissions:

(i) The tonnage equivalent of the allowances authorized to be allocated to the affected units at a source for use in a calendar year; under paragraphs (a)(1), (a)(3), and (h) of section 404 of the Clean Air Act, 42 USC 7401, or the basic phase II allowance allocations authorized to be allocated to an affected unit for use in a calendar year, or the allowances authorized to be allocated to an opt-in source under section 410 of the Clean Air Act for use in a calendar year;

(ii) As adjusted:

(a) By allowances allocated by the USEPA pursuant to section 403, section 405 paragraphs (a)(2), (a)(3), (b)(2), (c)(4), (d)(3), and (h)(2), and section 406 of the Clean Air Act;

(b) By allowances allocated by the USEPA pursuant to 40 CFR Part 72, Subpart D;

(c) By allowance transfers to or from the compliance account for that source that were recorded or properly submitted for recordation by the allowance transfer deadline as provided in 40 CFR 73.35, after deductions and other adjustments are made pursuant to 40 CFR 73.34(c).

(b) For purposes of nitrogen oxides emissions, the applicable limitation under 40 CFR Part 76.

(3) "Acid rain emissions reduction requirement" means a requirement under the acid rain program to reduce the emissions of sulfur dioxide or nitrogen oxides from a unit to a specified level or by a specified percentage.

(4) "Acid rain permit" or "permit" means the legally binding written document or portion of such document, including any permit revision, that is issued by the director under this chapter and specifies the acid rain program requirements applicable to an affected source and to the owners and operators and the designated representative of the affected source or the affected unit.

(5) "Acid rain program" means the national sulfur dioxide and nitrogen oxides air pollution control and emissions reduction program established in accordance with Title IV of the Clean Air Act, rules 3745-103-01 to 3745-103-67 of the Administrative Code, and 40 CFR Parts 73, 74, 75, 76, 77, and 78.

(6) "Actual SO_2 emissions rate" means the annual average sulfur dioxide emissions rate for the unit (expressed in pound per MMBtu), for the specified calendar year; provided that, if the unit is listed in the National Allowance Data Base (NADB), the "1985 actual SO_2 emissions rate" for the unit shall be the rate specified by the USEPA in the NADB under the data field "SO2RTE."

(7) "Affected source" means a source that includes one or more affected units.

(8) "Affected states" means all states:

(a) Whose air quality may be affected and that are contiguous to the state when a permit, permit modification or permit renewal is being proposed; or

(b) That are within fifty miles of the permitted source.

(9) "Affected unit" means a unit that is subject to any acid rain emissions reduction requirement or acid rain emissions limitation under rule 3745-103-02 or rules 3745-103-22 to 3745-103-54 of the Administrative Code.

(10) "Allowable SO_2 emissions rate" means the most stringent federally enforceable emissions limitation for sulfur dioxide (in pound per MMBtu) applicable to the unit or combustion source for the specified calendar year, or for such subsequent year as determined by the U.S. EPA where such a limitation does not exist for the specified year; provided that, if a phase I or phase II unit is listed in the NADB, the "1985 allowable SO_2 emission rate" for the phase I or phase II unit shall be the rate specified by the USEPA in the NADB under the data field "1985 annualized boiler SO_2 emission limit."

(11) “Allowance” means an authorization by the USEPA under the acid rain program to emit up to one ton of sulfur dioxide during or after a specified calendar year.

(12) “Allowance deduction,” or “deduct” when referring to allowances, means the permanent withdrawal of allowances by the USEPA from an allowance tracking system compliance account, to account for the number of tons of SO_2 emissions from the affected units at an affected source for the calendar year, for tonnage emissions estimates calculated for periods of missing data as provided in 40 CFR Part 75, or for any other allowance surrender obligations of the acid rain program.

(13) “Allowances held” or “hold allowances” means the allowances recorded by the USEPA, or submitted to the USEPA for recordation in accordance with 40 CFR 73.50, in an allowance tracking system account.

(14) “Allowance transfer deadline” means midnight of March first (or February twenty-ninth in any leap year) or, if such day is not a business day, midnight of the first business day thereafter and is the deadline by which allowances may be submitted for recordation in an affected source's compliance account for the purposes of meeting the source's acid rain emissions limitation requirements for sulfur dioxide for the previous calendar year.

(15) “Alternative contemporaneous annual emission limitation” means the maximum allowable NO_x emission rate (on a pound per MMBtu, annual average basis) assigned to an individual unit in a NO_x emissions averaging plan pursuant to rule 3745-103-63 of the Administrative Code.

(16) “Alternative technology” means a control technology for reducing NO_x emissions that is outside the scope of the definition of low NO_x burner technology. Alternative technology does not include overfire air as applied to wall-fired boilers or separated overfire air as applied to tangentially fired boilers.

(17) “Approved clean coal technology demonstration project” means a project using funds appropriated under the United States department of energy's “Clean Coal Technology Demonstration Program,” up to a total amount of two billion five hundred million dollars for commercial demonstration of clean coal technology, or similar projects funded through appropriations for USEPA. The federal contribution for a qualifying project shall be at least twenty per cent of the total cost of the demonstration project.

(18) “Arch-fired boiler” means a dry bottom boiler with circular burners, or coal and air pipes, oriented downward and mounted on waterwalls that are at an angle significantly different from the horizontal axis and the vertical axis. This definition shall include only the following units: Holtwood unit 17, Hunlock unit 6, and Sunbury units 1a, 1b, 2a, and 2b. This definition shall exclude dry bottom turbo fired boilers.

(19) "Authorized account representative" means a responsible natural person who is authorized, in accordance with 40 CFR Part 73, to transfer and otherwise dispose of allowances held in an allowance tracking system general account; or in the case of a compliance account, the designated representative of the owners or operators of the affected source and the affected units at the source.

(20) "Basic Phase II allowance allocations" means:

(a) For calendar years 2000 through 2009 inclusive, allocations of allowances made by the USEPA pursuant to section 403, and paragraphs (b)(1), (3), and (4); (c)(1), (2), (3), and (5); (d)(1), (2), (4), and (5); (e); (f); (g)(1), (2), (3), (4), and (5); (h)(1); (i); and (j) of section 405 of the Clean Air Act.

(b) For each calendar year beginning in 2010, allocations of allowances made by the U.S. EPA pursuant to section 403 and paragraphs (b)(1), (3), and (4); (c)(1), (2), (3), and (5); (d)(1), (2), (4), and (5); (e); (f); (g)(1), (2), (3), (4), and (5); (h)(1) and (3); (i); and (j) of section 405 of the Clean Air Act.

(21) "Boiler" means an enclosed fossil or other fuel-fired combustion device used to produce heat and to transfer heat to recirculating water, steam, or any other medium.

(22) "Btu" means British thermal unit.

(23) "Cell burner boiler" means a wall-fired boiler that utilizes two or three circular burners combined into a single vertically oriented assembly that results in a compact, intense flame. Any low NO_x retrofit of a cell burner boiler that reuses the existing cell burner, close-coupled wall opening configuration would not change the designation of the unit as a cell burner boiler.

(24) "CEMS" means continuous emission monitoring system.

(25) "Clean Air Act" means the Clean Air Act Amendments of 1990 contained in 42 USC 7401 to 7671q.

(26) "CO_2" means carbon dioxide.

(27) "Coal" means all solid fuels classified as anthracite, bituminous, subbituminous, or lignite by the American society for testing and materials designation ASTM D388-92 "Standard Classification of Coals by Rank."

(28) "Coal-derived fuel" means any fuel, whether in a solid, liquid, or gaseous state, produced by the mechanical, thermal, or chemical processing of coal (including, but not limited to, pulverized coal, coal refuse, liquefied or gasified coal, washed coal, chemically cleaned coal, coal-oil mixtures, and coke).

(29) "Coal-fired" means for all purposes under the acid rain program, except for purposes of applying rules 3745-103-55 to 3745-103-66 of the Administrative Code, the combustion of fuel consisting of coal or any coal-derived fuel (except a coal-derived gaseous fuel that meets the definition of very low sulfur fuel in this rule), alone or in combination with any other fuel, where a unit is coal-fired if it uses coal or coal-derived fuel as its primary fuel (expressed in MMBtu); provided that, if the unit is listed in the NADB, the primary fuel is the fuel listed in the NADB under the data field PRIMEFUEL.

(30) "Coal-fired utility unit" means a utility unit in which the combustion of coal (or any coal-derived fuel) on a Btu basis exceeds 50.0 per cent of its annual heat input during the following calendar year: for phase I units, in calendar year 1990; and, for phase II units, in calendar year 1995 or, for a phase II unit that did not combust any fuel that resulted in the generation of electricity in calendar year 1995, in any calendar year during the period 1990-1995. For purposes of applying rules 3745-103-55 to 3745-103-66 of the Administrative Code, this definition shall apply notwithstanding any other definition in this rule.

(31) "Combustion controls" means technology that minimizes NO_x formation by staging fuel and combustion air flows in a boiler. This definition shall include low NO_x burners, overfire air, or low NO_x burners with overfire air.

(32) "Combustion source" means a stationary fossil fuel-fired boiler, turbine, or internal combustion engine where the designated representative has submitted or intends to submit an opt-in permit application under rule 3745-103-28 of the Administrative Code to enter into the "opt-in program."

(33) "Cogeneration unit" means a unit that has equipment used to produce electric energy and forms of useful thermal energy (such as heat or steam) for industrial, commercial, heating, or cooling purposes, through sequential use of energy.

(34) "Commence commercial operation" means to have begun to generate electricity for sale, including the sale of electricity during testing.

(35) "Commence construction" means that an owner or operator has either undertaken a continuous program of construction or has entered into a contractual obligation to undertake and complete, within a reasonable time, a continuous program of construction.

(36) "Commence operation" means to have begun any mechanical, chemical, or electronic process, including start-up of an emissions control technology or emissions monitor or of a unit's combustion chamber.

(37) "Common stack" means the exhaust of emissions from two or more units through a single flue.

(38) “Compensating unit” means an affected unit that is not otherwise subject to acid rain emissions limitation or acid rain emissions reduction requirements during phase I and that is designated as a phase I unit in a reduced utilization plan under 40 CFR 72.43; provided that an opt-in source shall not be a compensating unit.

(39) “Compliance account” means an allowance tracking system account, established by the USEPA under 40 CFR 73.31(a), 40 CFR 73.31(b), or 40 CFR 74.40(a) for an affected source and for each affected unit at the source.

(40) “Compliance certification” means a submission to the USEPA or the director of Ohio environmental protection agency, as appropriate, that is required by this chapter or by 40 CFR Parts 72, 73, 74, 75, 76, 77, or 78, to report an affected source's or an affected unit's compliance or non-compliance with a provision of the acid rain program and that is signed and verified by the designated representative in accordance with rule 3745-103-06 of the Administrative Code, 40 CFR Part 72, Subpart B and Subpart I, and the acid rain program regulations.

(41) “Compliance plan” means the document submitted for an affected source in accordance with rules 3745-103-07 and 3745-103-08, or 3745-103-41 to 3745-103-51 of the Administrative Code, or 40 CFR Part 76, specifying the method(s) (including one or more acid rain compliance options as provided under rules 3745-103-09 and 3745-103-10 of the Administrative Code or rules 3745-103-41 to 3745-103-51 of the Administrative Code, or 40 CFR Part 76) by which each affected unit at the source will meet the applicable acid rain emissions limitation and acid rain emissions reduction requirements.

(42) “Compliance use date” means the first calendar year for which an allowance may be used for purposes of meeting a source's acid rain emissions limitation for sulfur dioxide.

(43) “Conditionally valid data” means data from a continuous monitoring system that are not quality assured, but which may become quality assured if certain conditions are met. Examples of data that may qualify as conditionally valid are:

(a) Data recorded by an uncertified monitoring system prior to its initial certification; or

(b) Data recorded by a certified monitoring system following a significant change to the system that may affect its ability to accurately measure and record emissions.

A monitoring system must pass a probationary calibration error test, in accordance with 40 CFR Part 75, Appendix B, Section 2.1.1, to initiate the conditionally valid data status. In order for conditionally valid emission data to become quality assured, one or more quality assurance tests or diagnostic tests

must be passed within a specified time period in accordance with paragraph (b)(3) of 40 CFR 75.20.

(44) "Construction" means fabrication, erection, or installation of a unit or any portion of a unit.

(45) "Customer" means a purchaser of electricity not for the purposes of retransmission or resale. For generating rural electric cooperatives, the customers of the distribution cooperatives served by the generating cooperative will be considered customers of the generating cooperative.

(46) "Demonstration period" means a period of time not less than fifteen months, approved under rule 3745-103-62 of the Administrative Code, for demonstrating that the affected unit cannot meet the applicable emission limitation under rule 3745-103-57, 3745-103-58, or 3745-103-59 of the Administrative Code and establishing the minimum NO_x emission rate that the unit can achieve during long-term load dispatch operation.

(47) "Designated representative" means a responsible natural person authorized by the owners and operators of an affected source and of all affected units at the source, as evidenced by a certificate of representation submitted in accordance with 40 CFR Part 72, Subpart B, to represent and legally bind each owner and operator, as a matter of federal law, in matters pertaining to the acid rain program. The term "designated representative" shall be construed to include the alternate designated representative, if any.

(48) "Diesel fuel" means a low sulfur fuel oil of grades 1-D or 2-D, as defined by the American society for testing and materials ASTM D975-91, "Standard Specification for Diesel Fuel Oils," grades 1-GT or 2-GT, as defined by ASTM D2880-90a, "Standard Specification for Gas Turbine Fuel Oils," or grade one or grade two, as defined by ASTM D396-90a, "Standard Specification for Fuel Oils."

(49) "Direct public utility ownership" means direct ownership of equipment and facilities by one or more corporations, the principal business of which is sale of electricity to the public at retail. Percentage ownership of such equipment and facilities shall be measured on the basis of book value.

(50) "Dry bottom" means a boiler has a furnace bottom temperature below the ash melting point and the bottom ash is removed as a solid.

(51) "Eligible Indian tribe" means any Indian tribe, band, or other organized group or community which is federally recognized as eligible for the special programs and services provided by the United States to Indians because of their status as Indians.

(52) “Emissions” means air pollutants exhausted from a unit or source into the atmosphere, as measured, recorded, and reported to the USEPA by the designated representative and as determined by the USEPA, in accordance with the emissions monitoring requirements of 40 CFR Part 75.

(53) “EPA protocol gas” means a calibration gas mixture prepared and analyzed according to section two of the “EPA Traceability Protocol for Assay and Certification of Gaseous Calibration Standards,” September 1997, as amended August 25, 1999, EPA-600/R97/121, or such revised procedure as approved by the administrator.

(54) “Excess emissions” means:

(a) Any tonnage of sulfur dioxide emitted by the affected units at an affected source during a calendar year that exceeds the acid rain emissions limitation for sulfur dioxide for the source; and

(b) Any tonnage of nitrogen oxide emitted by an affected unit during a calendar year that exceeds the annual tonnage equivalent of the acid rain emissions limitation for nitrogen oxides applicable to the affected unit taking into account the unit's heat input for the year.

(55) “Existing unit” means a unit (including a unit subject to section 111 of the Clean Air Act) that commenced commercial operation before November 15, 1990 and that on or after November 15, 1990 served a generator with a nameplate capacity of greater than twenty-five MWe. Existing unit does not include simple combustion turbines or any unit that on or after November 15, 1990 served only generators with a nameplate capacity of twenty-five MWe or less. Any existing unit that is modified, reconstructed, or repowered after November 15, 1990, shall continue to be an existing unit.

(56) “Fast-track modification” means that at the option of the designated representative, the permittee publicizes the proposed permit modifications in a newspaper of general circulation in the area where the source is located or in a state publication and gives notice to the interested parties. The public has thirty days to comment to the Ohio EPA. The permittee submits its proposed modifications to the Ohio EPA, and the agency has thirty days after the close of the comment period to rule on the proposed modifications.

(57) “Flue gas” means the combustion products arising from the combustion of fossil fuel in a utility boiler.

(58) “Fossil fuel” means natural gas, petroleum, coal, or any form of solid, liquid, or gaseous fuel derived from such material.

(59) “Fossil fuel-fired” means the combustion of fossil fuel or any derivative of fossil fuel, alone or in combination with any other fuel, independent of the percentage of fossil fuel consumed in any calendar year (expressed in MMBtu).

(60) “Fuel flowmeter quality assurance operating quarter” means a unit operating quarter in which the unit combusts the fuel measured by the fuel flowmeter for at least one hundred sixty-eight or more unit operating hours.

(61) “Fuel oil” means any petroleum-based fuel (including diesel fuel or petroleum derivatives such as oil tar) as defined by the American society for testing and materials in ASTM D396-90a, “Standard Specification for Fuel Oils,” and any recycled or blended petroleum products or petroleum by-products used as a fuel whether in a liquid, solid or gaseous state.

(62) “Gas-fired” means:

(a) For all purposes under the acid rain program, except for 40 CFR Part 75, the combustion of:

(i) Natural gas or other gaseous fuel (including coal-derived gaseous fuel), for at least 90.0 per cent of the unit's average annual heat input during the previous three calendar years and for at least 85.0 per cent of the annual heat input in each of those calendar years; and

(ii) Any fuel, except coal or solid or liquid coal-derived fuel, for the remaining heat input, if any.

(b) For purposes of 40 CFR Part 75, the combustion of:

(i) Natural gas or other gaseous fuel (including coal-derived fuel) for at least 90.0 per cent of the unit's average annual heat input during the previous three calendar years and for at least 85.0 per cent of the annual heat input in each of those calendar years; and

(ii) Fuel oil, for the remaining heat input, if any.

(c) For purposes of 40 CFR Part 75, a unit may initially qualify as gas-fired if the designated representative demonstrates to the satisfaction of the Ohio EPA that the requirements of paragraph (B)(62)(b) of this rule are met, or will in the future be met, through one of the following submissions:

(i) For a unit for which a monitoring plan has not been submitted under 40 CFR 75.62, the designated representative submits either:

(a) Fuel usage data for the unit for the three calendar years immediately preceding the date of initial submission of the monitoring for the unit under 40 CFR 75.62; or

(b) If a unit does not have fuel usage data for one or more of the three calendar years immediately preceding the date of initial submission of the monitoring for the unit under 40 CFR 75.62, the unit's designated fuel usage; all available fuel usage data (including the percentage of the unit's heat input derived from the combustion of gaseous fuels), beginning with the date on which the unit commenced commercial operation; and the unit's projected fuel usage.

(ii) For a unit for which a monitoring plan has already been submitted under 40 CFR 75.62, that has not qualified as gas-fired under paragraph (B)(62)(c)(i) of this rule, and whose fuel usage changes, the designated representative submits either:

(a) Three calendar years of data following a change in the unit's fuel usage, showing that no less than 90.0 per cent of the unit's average annual heat input during the previous three calendar years, and no less than 85.0 per cent of the unit's annual heat input during any one of the previous three calendar years, if from the combustion of gaseous fuels and the remaining heat input is from the combustion of fuel oil; or

(b) A minimum of seven hundred twenty hours of unit operating data following the change in the unit's fuel usage, showing that no less than 90.0 per cent of the unit's heat input is from the combustion of gaseous fuels and the remaining heat input is from the combustion of fuel oil, and a statement that this changed pattern of fuel usage is considered permanent and is projected to continue for the foreseeable future.

(iii) If a unit qualifies as gas-fired under paragraph (B)(62)(c)(i) or (B)(62)(c)(ii) of this rule, the unit is classified as gas-fired as of the date of the submission under such paragraph.

(d) For the purpose of 40 CFR Part 75, a unit that initially qualifies as gas-fired under paragraph (B)(62)(c)(i) or (B)(62)(c)(ii) of this rule must meet the criteria in paragraph (B)(62)(b) of this rule each year in order to continue to qualify as gas-fired. If such a unit combusts only gaseous fuel and fuel oil but fails to meet such criteria for a given year, the unit no longer qualifies as gas-fired starting the day after the first day for which the criteria are not met. If a unit failing to meet the criteria in paragraph (B)(62)(b) of this rule initially qualified as a gas-fired unit under paragraph (B)(62)(c) of this rule,

the unit may qualify as a gas-fired unit for a subsequent year only if the designated representative submits the data specified in paragraph (B)(62)(c)(ii)(a) of this rule.

(63) "Gas manufacturers intermediate standard (GMIS)" means a compressed gas calibration standard that has been assayed and certified by direct comparison to a standard reference material (SRM), an SRM-equivalent PRM, a NIST/EPA-approved certified reference material (CRM), or a NIST traceable reference material (NTRM) in accordance with section 2.1.2.1 of the "EPA Traceability Protocol for Assay and Certification of Gaseous Calibration Standards," EPA-600/R-97/121.

(64) "Generator" means a device that produces electricity and was or would have been required to be reported as a generating unit pursuant to the United States department of energy form 860 (1990 edition).

(65) "Generator output capacity" means the full-load continuous rating of a generator under specific conditions as designated by the manufacturer.

(66) "Group one boiler" means a tangentially fired boiler or a dry bottom wall-fired boiler (other than a unit applying cell burner technology).

(67) "Group two boiler" means a wet bottom wall-fired boiler, a cyclone boiler, a boiler applying cell burner technology, a vertically fired boiler, an arch-fired boiler, or any other type of utility boiler (such as a fluidized bed or stoker boiler) that is not a group one boiler.

(68) "Heat input" means the product (expressed in MMBtu per unit of time) of the gross calorific value of the fuel (expressed in Btu per pound) and the fuel feed rate into the combustion device (expressed in mass of fuel per unit of time) and does not include the heat derived from preheated combustion air, recirculated flue gases, or exhaust from other sources.

(69) "Independent power production facility" or "IPP" means a source that:

(a) Is nonrecourse project financed, as defined by the secretary of energy at 10 CFR Part 715;

(b) Is used for the generation of electricity, eighty per cent or more of which is sold at wholesale; and

(c) Is a new unit required to hold allowances under Title IV of the Clean Air Act; provided that direct public utility ownership of the equipment comprising the facility does not exceed fifty per cent.

(70) "Kacfm" means thousands of cubic feet per minute actual conditions.

(71) “Kscfh” means thousands of cubic feet per hour at standard conditions.

(72) “KWH” means kilowatt hour.

(73) “Life-of-the-unit, firm power contractual arrangement” means a unit participation power sales agreement under which a utility or industrial customer reserves, or is entitled to receive, a specified amount or percentage of nameplate capacity and associated energy generated by any specified generating unit and pays its proportional amount of such unit's total costs, pursuant to a contract:

(a) For the life of the unit;

(b) For a cumulative term of no less than thirty years, including contracts that permit an election for early termination; or

(c) For a period equal to or greater than twenty-five years or seventy per cent of the economic useful life of the unit, determined as of the time the unit was built, with option rights to purchase or release some portion of the nameplate capacity and associated energy generated by the unit at the end of the period.

(74) “Low NO_x burners” and “low NO_x burner technology” means commercially available combustion modification NO_x controls that minimize NO_x formation by introducing coal and its associated combustion air into a boiler such that initial combustion occurs in a manner that promotes rapid coal devolatilization in a fuel-rich (i.e., oxygen deficient) environment and introduces additional air to achieve a final fuel-lean (i.e., oxygen rich) environment to complete the combustion process. This definition shall include the staging of any portion of the combustion air using air nozzles or registers located inside any waterwall hole that includes a burner. This definition shall exclude the staging of any portion of the combustion air using air nozzles or ports located outside any waterwall hole that includes a burner (commonly referred to as NO_x ports or separated overfire air ports).

(75) “Maximum continuous steam flow at one hundred per cent of load” means the maximum capacity of a boiler as reported in item three (maximum continuous steam flow at one hundred per cent load in thousand pounds per hour), section C (design parameters), part iii (boiler information) of the United States department of energy's form EIA-767 for 1995.

(76) “MMBtu” means million Btu.

(77) “MWe” means megawatt electrical.

(78) “Nameplate capacity” means the maximum electrical generating output (expressed in MWe) that a generator can sustain over a specified period of time when not restricted by seasonal or other deratings, as listed in the NADB under the data field “NAMECAP” if the generator is listed in the NADB or as measured in accordance with the United States department of energy standards if the generator is not listed in the NADB.

(79) “National allowance data base” or “NADB” means the data base established under section 402 (4)(c) of the Clean Air Act.

(80) “Natural gas” means a naturally occurring fluid mixture of hydrocarbons (e.g., methane, ethane, or propane), produced in geological formations beneath the earth's surface, that maintains a gaseous state at standard atmospheric temperature and pressure, under ordinary conditions. Natural gas contains 20.0 grains or less of total sulfur per one hundred standard cubic feet. Additionally natural gas must either be composed of at least seventy per cent methane by volume or have a gross calorific value between nine hundred fifty and one thousand one hundred Btu per standard cubic foot. Natural gas does not include the following gaseous fuels: landfill gas, digester gas, refinery gas, sour gas, blast furnace gas, coal-derived gas, producer gas, coke oven gas, or any gaseous fuel produced in a process which might result in highly variable sulfur content or heating value.

(81) “New unit” means a unit that commences commercial operation on or after November 15, 1990, including any such unit that serves a generator with a nameplate capacity of twenty-five MWe or less or that is a simple combustion turbine.

(82) “NIST” means national institute of standards and technology.

(83) “NIST traceable reference material (NTRM)” means a calibration gas mixture tested by and certified by the NIST to have a certain specified concentration of gases. NTRMs may have different concentrations from those of standard reference materials.

(84) “Non-plug-in combustion controls” means the replacement, in a cell burner boiler, of the portions of the waterwalls containing the cell burners by new portions of the waterwalls containing low NO_x burners or low NO_x burners with overfire air.

(85) “Oil-fired” means:

(a) For all purposes under the acid rain program, except for 40 CFR Part 75 the combustion of:

(i) Fuel oil for more than ten per cent of the average annual heat input during the previous three calendar years or for more than fifteen per cent of the annual heat input in any one of those calendar years; and any solid, liquid, or gaseous fuel, other than coal or any other coal-derived fuel (except a coal-derived gaseous fuel with a sulfur content no greater than natural gas), for the remaining heat input, if any.

(ii) Any solid, liquid or gaseous fuel (including coal-derived gaseous fuel), other than coal or any other coal-derived gaseous fuel), for the remaining heat input, if any.

(b) For the purpose of 40 CFR Part 75, combustion of only fuel oil and gaseous fuels, provided that the unit involved does not meet the definition of gas fired.

(86) “Operating” when referring to a combustion or process source seeking entry into the “Opt-in Program,” means that the source had documented consumption of fuel input for more than eight hundred seventy-six hours in the six months immediately preceding the submission of a combustion source's opt-in application under paragraph (A) of rule 3745-103-29 of the Administrative Code.

(87) “Operating period” means a period of time of not less than three consecutive months and that occurs not more than one month prior to applying for an alternative emission limitation demonstration period under rule 3745-103-62 of the Administrative Code, during which the owner or operator of an affected unit that cannot meet the applicable emission limitation:

(a) Operates the installed NO_x emission controls in accordance with primary vendor specifications and procedures, with the unit operating under normal conditions; and

(b) Records and reports quality-assured continuous emission monitoring (CEM) and unit operating data according to the methods and procedures in 40 CFR Part 75.

(88) “Operating permit” means a permit issued under 40 CFR Part 70 and any other regulations implementing Title V of the Clean Air Act.

(89) “Opt-in” or “opt into” means to elect to become an affected unit under the acid rain program through the issuance of the final effective opt-in permit under rule 3745-103-28 of the Administrative Code.

(90) “Opt-in permit” means the legally binding written document that is contained within the acid rain permit and sets forth the requirements under rule 3745-103-29 of the Administrative Code for a combustion source or rule 3745-103-30 of

the Administrative Code for a process source that opts into the acid rain program.

(91) “Opt-in source” means a combustion source or process source that has elected to become an affected unit under the acid rain program and whose opt-in permit has been issued and is in effect.

(92) “Owner” means any of the following persons:

(a) Any holder of any portion of the legal or equitable title in an affected unit or in a combustion source or process source;

(b) Any holder of a leasehold interest in an affected unit or in a combustion source or process source; or

(c) Any purchaser of power from an affected unit or from a combustion source or process source under a life-of-the-unit, firm power contractual arrangement as the term is defined herein and used in section 408 (i) of the Clean Air Act. However, unless expressly provided for in a leasehold agreement, owner shall not include a passive lessor, or a person who has an equitable interest through such lessor, whose rental payments are not based, either directly or indirectly, upon the revenues or income from the affected unit; or

(d) With respect to any allowance tracking system general account, any person identified in the submission required by 40 CFR 73.31(c) that is subject to the binding agreement for the authorized account representative to represent that person's ownership interest with respect to allowances.

(93) “Operator” means any person who is an owner or who operates, controls, or supervises an affected unit or affected source and shall include, but not be limited to, any holding company, utility system, or plant manager of an affected unit or affected source, combustion source, or process source.

(94) “Ozone season” means the period of time beginning May first of a year and ending on September thirtieth of the same year, inclusive.

(95) “Peaking unit” means:

(a) A unit that has:

(i) An average capacity factor of no more than 10.0 per cent during the previous three calendar years; and

(ii) A capacity factor of no more than 20.0 per cent in each of those calendar years.

(b) For the purpose of 40 CFR Part 75, a unit may initially qualify as a peaking unit if the designated representative demonstrates to the satisfaction of the director that the requirements of paragraph (B)(95)(a) of this rule are met, or will in the future be met, through one of the following submissions:

(i) For a unit for which a monitoring plan has not been submitted under 40 CFR 75.62, the designated representative submits either:

(a) Capacity factor data for the unit for the three calendar years immediately preceding the date of initial submission of the monitoring plan for the unit under 40 CFR 75.62; or

(b) If unit does not have capacity factor data for one or more of the three years immediately preceding the date of initial submission of the monitoring plan for the unit under 40 CFR 75.62, all available capacity factor data, beginning with the date on which the unit commenced commercial operation; and projected capacity factor data.

(ii) For a unit for which a monitoring plan has already been submitted under 40 CFR 75.62, that has not qualified as a peaking unit under paragraph (B)(95)(b)(i) of this rule, and where the capacity factor changes, the designated representative submits either:

(a) Three calendar years of data following the change in the units capacity factor showing an average capacity factor of no more than 10.0 per cent during the three previous calendar years and a capacity factor of no more than 20.0 per cent for each of those years; or

(b) One calendar year of data following the change in the units capacity factor showing a capacity factor of no more than 10.0 per cent and a statement that this changed pattern of operation resulting in a capacity factor less than 10.0 per cent is considered permanent and is projected to continue for the foreseeable future.

(c) For the purpose of 40 CFR Part 75, a unit that initially qualifies as a peaking unit must meet the criteria in paragraph (B)(95)(a) of this rule each year in order to continue to qualify as a peaking unit. If such a unit fails to meet such criteria for a given year, the unit no longer qualifies as a peaking unit starting January first of the year after the year for which the criteria are not met. If a unit failing to meet the criteria in paragraph (B)(95)(a) of this rule initially qualified as a peaking unit under paragraph (B)(95)(b) of this rule, the unit may qualify as a peaking unit for a subsequent year only if the

designated representative submits the data specified in paragraph (B)(95)(b)(ii)(a) of this rule.

(d) A unit required to comply with the provisions of 40 CFR Part 75, Subpart H, under a State or Federal NO_x mass emissions reduction program, may, pursuant to 40 CFR 75.74(c)(11), qualify as a peaking unit on an ozone season basis rather than an annual basis, if the owner or operator reports NO_x mass emissions and heat input data only during the ozone season.

(96) "Permitting authority" means the Ohio EPA, local agency, other state agency, or other agency authorized by the director to administer acid rain permits under rule 3745-103-13 of the Administrative Code.

(97) "Permit revision" means a permit modification, fast track modification, administrative permit amendment, or automatic permit amendment, as provided in rules 3745-103-16 to 3745-103-19 of the Administrative Code.

(98) "Phase I" means the acid rain program beginning January 1, 1995 and ending December 31, 1999.

(99) "Phase I unit" means any affected unit, except an affected unit under rules 3745-103-22 to 3745-103-54 of the Administrative Code, that is subject to an acid rain emissions reduction requirement or acid rain emissions limitations beginning in phase I; or any unit exempt under rule 3745-103-04 of the Administrative Code that, but for such exemption, would be subject to an acid rain emissions limitation beginning in phase I.

(100) "Phase II" means the acid rain program period beginning January 1, 2000, and continuing into the future thereafter.

(101) "Phase II unit" means any affected unit, except an affected unit under rules 3745-103-22 to 3745-103-54 of the Administrative Code, that is subject to an acid rain emissions reduction requirement or acid rain emissions limitation during phase II only.

(102) "Pipeline natural gas" means a naturally occurring fluid mixture of hydrocarbons (e.g., methane, ethane, or propane) produced in geological formations beneath the Earth's surface that maintains a gaseous state at standard atmospheric temperature and pressure under ordinary conditions, and which is provided by a supplier through a pipeline. Pipeline natural gas contains 0.5 grains or less of total sulfur per one hundred standard cubic feet. Additionally, pipeline natural gas must either be composed of at least seventy per cent methane by volume or have a gross calorific value between nine hundred fifty and one thousand one hundred Btu per standard cubic foot.

(103) “Plug-in combustion controls” means the replacement, in a cell burner boiler, of existing cell burners by low NO_x burners or low NO_x burners with overfire air.

(104) “Potential electrical output capacity” means the MWe capacity rating for the units which shall be equal to thirty-three per cent of the maximum design heat input capacity of the steam generating unit, as calculated according to 40 CFR Part 72, Appendix D.

(105) “Power distribution system” means the portion of an electricity grid owned or operated by a utility that is dedicated to delivering electric energy to customers.

(106) “Power purchase commitment” means a commitment or obligation of a utility to purchase electric power from a facility pursuant to:

(a) A power sales agreement;

(b) A state regulatory authority order requiring a utility to:

(i) Enter into a power sales agreement with the facility;

(ii) Purchase from the facility; or

(iii) Enter into arbitration concerning the facility for the purpose of establishing terms and conditions of the utility's purchase of power;

(c) A letter of intent or similar instrument committing to purchase power (actual electrical output or generator output capacity) from the source at a previously offered or lower price and a power sales agreement applicable to the source is executed within the time frame established by the terms of the letter of intent, but no later than November 15, 1993 or, where the letter of intent does not specify a time frame, a power sales agreement applicable to the source is executed on or before November 15, 1993; or

(d) A utility competitive bid solicitation that resulted in the selection of the qualifying facility or independent power production facility as the winning bidder.

(107) “Power sales agreement” means a legally binding agreement between a QF, IPP, or firm associated with such facility and a regulated electric utility that establishes the terms and conditions for the sale of power from the facility to the utility.

(108) “Primary fuel” or “primary fuel supply” means the main fuel type (expressed in MMBtu) consumed by an affected unit for the applicable calendar year.

(109) "Primary vendor" means the vendor of the NO_x emission control system who has primary responsibility for providing the equipment, service, and technical expertise necessary for detailed design, installation, and operation of the controls, including process data, mechanical drawings, operating manuals, or any combination thereof.

(110) "Probationary calibration error test" means an on-line calibration error test performed in accordance with 40 CFR Part 75, Appendix B, Section 2.1.1, that is used to initiate a conditionally valid data period.

(111) "QA operating quarter" means a calendar quarter in which there are at least one hundred sixty-eight unit operating hours or, for a common stack or bypass stack or bypass stack, a calendar quarter in which there are at least one hundred sixty-eight stack operating hours.

(112) "Qualifying facility" or "QF" means a qualifying small power production facility within the meaning of section 3(17)(C) of the Federal Power Act or a qualifying cogeneration facility within the meaning of section 3(18)(B) of the Federal Power Act.

(113) "Qualifying power purchase commitment" means a power purchase commitment in effect as of November 15, 1990, without regard to changes to that
commitment so long as:

(a) The identity of the electric output purchaser, or the identity of the steam purchaser and the location of the facility, remain unchanged as of the date the facility commences commercial operation; and

(b) The terms and conditions of the power purchase commitment are not changed in such a way as to allow the costs of compliance with the acid rain program to be shifted to the purchaser.

(114) "Qualifying repowering technology" means replacement of an existing coal-fired boiler with one of the following clean coal technologies: atmospheric or pressurized fluidized bed combustion, integrated gasification combined cycle, magnetohydrodynamics, direct and indirect coal-fired turbines, integrated gasification fuel cells, or as determined by the USEPA, in consultation with the secretary of energy, a derivative of one or more of these technologies, and any other technology capable of controlling multiple combustion emissions simultaneously with improved boiler or generation efficiency and with significantly greater waste reduction relative to the performance of technology in widespread commercial use as of November 15, 1990.

(115) "RATA" means relative accuracy test audit.

(116) “Reburning” means reducing the coal and combustion air to the main burners and injecting a reburn fuel (such as gas or oil) to create a fuel-rich secondary combustion zone above the main burner zone and final combustion air to create a fuel-lean burnout zone. The formation of NO_x is inhibited in the main burner zone due to the reduced combustion intensity, and NO_x is destroyed in the fuel-rich secondary combustion zone by conversion to molecular nitrogen.

(117) “Reduced utilization” means a reduction, during any calendar year in phase I, in the heat input (expressed in MMBtu for the calendar year) at a phase I unit below the unit's baseline, where such reduction subjects the unit to the requirement to submit a reduced utilization plan under 40 CFR 72.43; or, in the case of an opt-in source, means a reduction in the average utilization, as specified in rule 3745-103-45 of the Administrative Code, of an opt-in source below the opt-in source's baseline.

(118) “Replacement unit” means an affected unit replacing the thermal energy provided by an opt-in source, where both the affected unit and the opt-in source are governed by a thermal energy plan.

(119) “Repowering extension” means owners or operators of certain affected units, which must have been operating in 1985 or before with 1985 SO_2 emission rates of 1.2 pounds per MMBtu or greater, may apply for additional phase II allowance allocations for up to four years (the extension period) in exchange for replacing existing boiler technology with new USEPA approved clean coal technology.

(120) “Research gas mixture (RGM)” means a calibration gas mixture developed by agreement of a requestor and NIST that NIST analyzes and certifies as “NIST traceable.” RGM may have concentrations different from those of standard reference materials.

(121) “Schedule of compliance” means an enforceable sequence of actions, measures, or operations designed to achieve or maintain compliance, or correct non-compliance, with an applicable requirement of the acid rain program, including any applicable acid rain permit requirement.

(122) “Selective catalytic reduction” means a noncombustion control technology that destroys NO_x by injecting a reducing agent (e.g., ammonia) into the flue gas that, in the presence of a catalyst (e.g., vanadium, titanium, or zeolite), converts NO_x into molecular nitrogen and water.

(123) “Selective noncatalytic reduction” means a noncombustion control technology that destroys NO_x by injecting a reducing agent (e.g., ammonia, urea, or cyanuric acid) into the flue gas, downstream of the combustion zone that converts NO_x to molecular nitrogen, water, and when urea or cyanuric acid are used, to carbon dioxide (CO_2).

(124) “Simple combustion turbine” means a unit that is a rotary engine driven by a gas under pressure that is created by the combustion of any fuel. This term includes combined cycle units without auxiliary firing. This term excludes combined cycle units with auxiliary firing, unless the unit did not use the auxiliary firing from 1985 through 1987 and does not use auxiliary firing at any time after November 15, 1990.

(125) “Solid waste incinerator” means a distinct operating unit of any facility which combusts any solid waste material from commercial or industrial establishments or the general public, including single and multiple residences, hotels, and motels.

(126) “SO2RTE” means a data field listed in the national allowance data base which represents the 1985 boiler SO_2 emission rate expressed in pounds per MMBtu.

(127) “SO_2“ means sulfur dioxide.

(128) “Source” means any governmental, institutional, commercial, or industrial structure, installation, plant, building, or facility that emits or has the potential to emit any regulated air pollutant under the Clean Air Act, provided that one or more combustion or process sources that have, under paragraph (C) of rule 3745-103-25 of the Administrative Code, a different designated representative than the designated representative for one or more affected utility units at a source shall be treated as being included in a separate source from the source that includes such utility units for purposes of 40 CFR Parts 72 to 78, but shall be treated as being included in the same source as the source that includes such utility units for purposes of section 502(c) of the Clean Air Act. For purposes of this rule, a “source,” including a “source” with multiple units, shall be considered a single “facility.”

(129) “Span” means the highest pollutant or diluent concentration or flow rate that a monitor component is required to be capable of measuring under 40 CFR Part 75.

(130) “Stack operating hour” means a clock hour during which flue gases flow through a particular stack or duct (either for the entire hour or for part of the hour) while the associated unit(s) are combusting fuel.

(131) “Standard reference material-equivalent compressed gas primary reference material (SRM-equivalent PRM)” means those gas mixtures listed in a declaration of equivalence in accordance with section 2.1.2 of the “EPA Traceability Protocol for Assay and Certification of Gaseous Calibration Standards,” EPA-600/R-97/121.

(132) "State" means one of the forty-eight contiguous states and the District of Columbia and includes any non-federal authorities, including local agencies, interstate associations, and state-wide agencies with approved state operating permit programs. The term "state" shall have its conventional meaning where such meaning is clear from the context.

(133) "State operating permit program" means an operating permit program that the USEPA has approved under 40 CFR Part 70.

(134) "Stationary gas turbine" means a turbine that is not self-propelled and that combusts natural gas, other gaseous fuel with a total sulfur content no greater than the total sulfur content of natural gas, or fuel oil in order to heat inlet combustion air and thereby turn a turbine in addition to or instead of producing steam or heating water.

(135) "Stoker boiler" means a boiler that burns solid fuel in a bed, on a stationary or moving grate, that is located at the bottom of the furnace.

(136) "Sulfur-free generation" means the generation of electricity by a process that does not have any emissions of sulfur dioxide, including hydroelectric, nuclear, solar, and wind generation.

(137) "Submit" or "serve" means to send or transmit a document, information, or correspondence to the person specified in accordance with the applicable regulations:

(a) In person;

(b) By United States postal service; or

(c) By other equivalent means of dispatch, or transmission, and delivery.

Compliance with any submission, service, or mailing deadline shall be determined by the date of dispatch, transmission, or mailing and not the date of receipt.

(138) "Sulfur-free generator" means a generator that produces such sulfur-free generation.

(139) "Tangentially fired boiler" means a boiler that has coal and air nozzles mounted in each corner of the furnace where the vertical furnace walls meet. Both pulverized coal and air are directed from the furnace corners along a line tangential to a circle lying in a horizontal plane of the furnace.

(140) “Thermal energy” means the thermal output produced by a combustion source used directly as part of a manufacturing process but not used to produce electricity.

(141) “Ton” or “tonnage” means any short ton (i.e., two thousand pounds). For the purpose of determining compliance with the acid rain emissions limitations and reduction requirements, total tons for a year shall be calculated as the sum of all recorded hourly emissions (or the tonnage equivalent of the recorded hourly emissions rates) in accordance with 40 CFR Part 75, with any remaining fraction of a ton equal to or greater than 0.50 ton deemed to equal one ton and any fraction of a ton less than 0.50 ton deemed not to equal a ton.

(142) “Total installed net output capacity” means the generator output capacity, excluding that portion of the electrical power actually used at the power production facility, as installed.

(143) “Total planned net output capacity” means the planned generator output capacity, excluding that portion of the electrical power which is designed to be used at the power production facility, as specified under one or more qualifying power purchase commitments or contemporaneous documents as of November 15, 1990.

(144) “Turbo-fired boiler” means a pulverized coal, wall-fired boiler with burners arranged on walls so that the individual flames extend down toward the furnace bottom and then turn back up through the center of the furnace.

(145) “Unit” means a fossil fuel-fired combustion device.

(146) “Unit operating hour” means a clock hour during which a unit combusts any fuel, either for part of the hour or for the entire hour.

(147) “USEPA” means the United States environmental protection agency.

(148) “Utility” means any person that sells electricity.

(149) “Utility competitive bid solicitation” is a public request from a regulated utility for offers to the utility for meeting future generating needs. A qualifying facility, independent power production facility, or new IPP may be regarded as having been selected in such solicitation if the utility has named the facility as a project with which the utility intends to negotiate a power sales agreement.

(150) “Utility system” means all interconnected units and generators operated by the same utility operating company as reported in the NADB under the data field “UTILNAME.”

(151) “Utility unit” means a unit owned or operated by a utility:

(a) That serves a generator in any state that produces electricity for sale; or

(b) That during 1985, served a generator in any state that produced electricity for sale.

(c) Notwithstanding paragraphs (B)(151)(a) and (B)(151)(b) of this rule, a unit that was in operation during 1985, but did not serve a generator that produced electricity for sale during 1985, and did not commence commercial operation on or after November 15, 1990 is not a utility unit for purposes of the acid rain program.

(d) Notwithstanding paragraphs (B)(151)(a) and (B)(151)(b) of this rule, a unit that cogenerates steam and electricity is not a utility unit for purposes of the acid rain program, unless the unit is constructed for the purpose of supplying, or commences construction after November 15, 1990 and supplies, more than one-third of its potential electrical output capacity and more than twenty-five MWe output to any power distribution system for sale.

(152) "Vertically fired boiler" means a dry bottom boiler with circular burners, or coal and air pipes, oriented downward and mounted on waterwalls that are horizontal or at an angle. This definition shall include dry bottom roof-fired boilers and dry bottom top-fired boilers, and shall exclude dry bottom arch-fired boilers and dry bottom turbo-fired boilers.

(153) "Very low sulfur fuel" means either:

(a) A fuel with a total sulfur content no greater than 0.05 per cent by weight;

(b) Natural gas or pipeline natural gas, as defined in this rule; or

(c) Any gaseous fuel with a total sulfur content no greater than twenty grains of sulfur per one hundred standard cubic feet.

(154) "Wall-fired boiler" means a boiler that has pulverized coal burners arranged on the walls of the furnace. The burners have discrete, individual flames that extend perpendicularly into the furnace area.

(155) "Wet bottom" means that the ash is removed from the furnace in a molten state.

(156) "Wet bottom boiler" shall include: wet bottom wall-fired boilers, including wet bottom turbo-fired boilers; and wet bottom boilers otherwise meeting the definition of vertically fired boilers, including wet bottom arch-fired boilers, wet

bottom roof-fired boilers, and wet bottom top-fired boilers. The term "wet bottom boiler" shall exclude cyclone boilers and tangentially fired boilers.

(157) "Zero air material" means either:

(a) A calibration gas certified by the gas vendor not to contain concentrations of SO_2, NO_x, or total hydrocarbons above one tenth part per million, a concentration of CO above one part per million, or a concentration of CO_2 above four hundred parts per million;

(b) Ambient air conditioned and purified by a CEMS for which the CEMS manufacturer or vendor certifies that the particular CEMS model produces conditioned gas that does not contain concentrations of SO_2, NOx, or total hydrocarbons above one tenth part per million, a concentration of CO above one part per million, or a concentration of CO_2 above four hundred parts per million.

(c) For dilution-type CEMS, conditioned and purified ambient air provided by a conditioning system concurrently supplying dilution air to the CEMS; or

(d) A multicomponent mixture certified by the supplier of the mixture that the concentration of the component being zeroed is less than or equal to the applicable concentration specified in paragraph (B)(157)(a) of this rule, and that the mixture's other components do not interfere with the CEMS readings.

(C) Reference to materials. This chapter includes references to certain matter or materials. The text of the referenced material is not included in the rules contained in this chapter. Information on the availability of the referenced materials as well as the date of, and/or the particular edition or version of the material is included in this rule. For materials subject to change, only the specific versions specified in this rule are referenced. Material is referenced as it exists on the effective date of this rule. Except for subsequent annual publication of existing (unmodified) Code of Federal Regulation compilations, any amendment or revision to a referenced document is not applicable unless and until this rule has been amended to specify the new dates.

(1) Availability. The referenced materials are available as follows:

(a) American Society for Testing and Materials. Information and copies may be obtained by writing to: "ASTM International, 100 Bar Harbor Drive, P.O. Box C700, West Conshohocken, Pennsylvania 19428-2959." These documents are available for purchase at www.astm.org. ASTM documents are also generally available at local public libraries and "The State Library of Ohio."

(b) The American Society of Mechanical Engineers. Information and copies may be obtained by writing to: "ASME International, Three Park Ave., New York, NY 10016." These documents are also available for purchase at www.asme.org. ASME documents are also generally available at local public libraries and "The State Library of Ohio."

(c) Clean Air Act. Information and copies may be obtained by writing to: "Superintendent of Documents, Attn: New Orders, PO Box 371954, Pittsburgh, PA 15250-7954." The full text of the Act as amended in 1990 is also available in electronic format at www.epa.gov/oar/caa/. A copy of the act is also available for inspection and copying at most public libraries and "The State Library of Ohio."

(d) Code of Federal Regulations. Information and copies may be obtained by writing to: "Superintendent of Documents, Attn: New Orders, PO Box 371954, Pittsburgh, PA 15250-7954." The full text of the CFR is also available in electronic format at www.gpo.gov/fdsys/. The CFR compilations are also available for inspection and copying at most public libraries and "The State Library of Ohio."

(e) EIA-767 (2004); "Steam-Electric Plant Operation and Design Report;" The form has been superseded by forms EIA-860 and EIA-923. Information and copies may be obtained by writing to: "Energy Information Administration, 1000 Independence Ave, SW, Washington, DC 20585." The forms are also available in electronic format at http://www.eia.gov/cneaf/electricity/2008forms/consolidate.html.

(f) EPA-600/R97/121; "EPA Traceability Protocol for Assay and Certification of Gaseous Calibration Standards;" Information and copies may be obtained by writing to: "Superintendent of Documents, Attn: New Orders, PO Box 371954, Pittsburgh, PA 15250-7954." The form is also available in electronic format at http://www.epa.gov/ttnemc01/news/sec2.pdf.

(g) Federal Power Act. Information and copies may be obtained by writing to: "Superintendent of Documents, Attn: New Orders, PO Box 371954, Pittsburgh, PA 15250-7954." The full text of the act is also available in electronic format at http://www.law.cornell.edu/uscode/html/uscode16/usc_sup_01_16_10_12_20_I.html. A copy of the act is also available for inspection and copying at most public libraries and "The State Library of Ohio."

(h) International Organization for Standardization. These documents are available for purchase at www.iso.org. ISO documents are also generally available at local public libraries and "The State Library of Ohio."

(i) USEPA Form 7610-16. Information and copies may be obtained by writing to: US EPA Clean Air Markets Division, 1310 L Street, NW Second Floor, Washington, DC 20005. It is also available in electronic format at http://www.epa.gov/airmarkets/business/docs/forms/ar_permit2010.pdf. Form 7610-16 can also be obtained for inspection and copying at most public libraries and "The State Library of Ohio."

(j) United States Code. Information and copies may be obtained by writing to: "Superintendent of Documents, Attn: New Orders, PO Box 371954, Pittsburgh, PA 15250-7954." The full text of the United States Code is also available in electronic format at http://www4.law.cornell.edu/uscode/. The USC compilations are also available for inspection and copying at most public libraries and "The State Library of Ohio."

(2) Referenced materials.

(a) 10 CFR Part 715; "Definition of non-recourse project-financed;" 56 FR 55064, Oct. 24, 1991.

(b) 18 USC 1001; "Statements or entries generally;" published January 19, 2004 in Supplement III of the 2000 Edition of the United States Code; as amended Dec. 17, 2004, Pub.L. 108-458, sec. 6703(a), 118 Stat. 3766; new note added Apr. 30, 2003, Pub.L. 108-21, sec. 607(a), 117 Stat. 689; new note added July 15, 2004, Pub.L. 108-275, sec. 1, 118 Stat. 831.

(c) 40 CFR 60.15; "Reconstruction;" 40 FR 58420, Dec. 16, 1975.

(d) 40 CFR 60.48a; "Compliance provisions;" 44 FR 33613, June 11, 1979, as amended at 54 FR 6664, Feb. 14, 1989; 63 FR 49454, Sept. 16, 1998; 66 FR 18552, Apr. 10, 2001; 66 FR 31178, June 11, 2001. Redesignated and amended at 70 FR 28653, 28654, May 18, 2005.

(e) 40 CFR 72.3; "Measurements, abbreviations, and acronyms;" 58 FR 3650, Jan. 11, 1993, as amended at 64 FR 28588, May 26, 1999.

(f) 40 CFR 72.4; "Federal authority;" 58 FR 3650, Jan. 11, 1993, as amended at 60 FR 17113, Apr. 4, 1995.

(g) 40 CFR 72.5; "State authority," 58 FR 3650, Jan. 11, 1993.

(h) 40 CFR 72.10; "Availability of information," 58 FR 3650, Jan. 11, 1993.

(i) 40 CFR 72.11; "Computation of time," 58 FR 3650, Jan. 11, 1993.

(j) 40 CFR 72.12; "Administrative appeals," 58 FR 3650, Jan. 11, 1993.

(k) 40 CFR 72.13; "Incorporation by reference," 58 FR 3650, Jan. 11, 1993, as amended at 60 FR 26526, May 17, 1995; 62 FR 55478, Oct. 24, 1997.

(l) 40 CFR 72.23; "Changing the designated representative, alternate designated representative; changes in the owners and operators," 58 FR 3650, Jan. 11, 1993.

(m) 40 CFR 72.24; "Certificate of representation;" 58FR 3650, Jan. 11, 1993, as amended at 62FR 55480, Oct. 24, 1997.

(n) 40 CFR 72.41; "Phase I substitution plans;" 58FR 3650, Jan. 11, 1993, as amended at 58FR 40747, July 30, 1993; 59 FR 60230, 60238, Nov. 22, 1994; 62FR 55481, Oct. 24, 1997.

(o) 40 CFR 72.43; "Phase I reduced utilization plans;" 58FR 3650, Jan. 11, 1993, as amended at 59FR 60230, Nov. 22, 1994; 60 FR 18470, Apr. 11, 1995; 62FR 55481, Oct. 24, 1997.

(p) 40 CFR 72.74; "Federal issuance of Phase II permits;" 62FR 55483, Oct. 24, 1997.

(q) 40 CFR 72.81; "Permit modifications;" 58FR 3650, Jan. 11, 1993, as amended at 60FR 17114, Apr. 4, 1995; 62FR 55485, Oct. 24, 1997.

(r) 40 CFR 72.91(b); "Confirmation report;" 58FR 3650, Jan. 11, 1993, as amended at 58FR 40747, July 30, 1993; 59FR 60231, Nov. 22, 1994; 60FR 18470, Apr. 11, 1995; 62FR 55485, Oct. 24, 1997.

(s) 40 CFR 73.10; "Initial allocations for phase I and phase II;" 58FR 3687, Jan. 11, 1993, as amended at 58FR 15650, Mar. 23, 1993; 58FR 33770, June 21, 1993; 58FR 40747, July 30, 1993; 62FR 55486, Oct. 24, 1997; 63FR 51714, Sept. 28, 1998.

(t) 40 CFR 73.31(a); "Existing affected units," 58 FR 3687, Jan. 11, 1993; 58 FR 40747, July 30, 1993.

(u) 40 CFR 73.31(b); "New units," 58 FR 3687, Jan. 11, 1993; 58 FR 40747, July 30, 1993.

(v) 40 CFR 73.34(c); "Recordation in subaccounts;" 58FR 3671, Jan. 11, 1993, as amended at 60FR 17114, Apr. 4, 1995; 63FR 68404, Dec. 11, 1998.

(w) 40 CFR 73.35; "Compliance;" 58FR 3691, Jan. 11, 1993, as amended at 60FR 17114, Apr. 4, 1995; 64FR 25842, May 13, 1999.

(x) 40 CFR 73.50; "Scope and submission of transfers;" 58FR 3694, Jan. 11, 1993, as amended at 63FR 68404, Dec. 11, 1998.

(y) 40 CFR 73.70; "Auctions;" 56FR 65601, Dec. 17, 1991, as amended at 61 FR 28763, June 6, 1996; 63FR 5735, Feb. 4, 1998; 63FR 51766, Sept. 28, 1998.

(z) 40 CFR 74.44; "Reduced utilization for combustion sources;" 60 FR 17115, Apr. 4, 1995, as amended at 63 FR 18841, Apr. 16, 1998.

(aa) 40 CFR 74.46; "Opt-in source permanent shutdown, reconstruction, or change in affected status;" 60 FR 17115, Apr. 4, 1995, as amended at 70 FR 25337, May 12, 2005.

(bb) 40 CFR 75.16; "Special provisions for monitoring emissions from common, bypass, and multiple stacks for SO2 emissions and heat input determinations;" 60 FR 26522, May 17, 1995, as amended at 61 FR 25582, May 22, 1996; 61 FR 59158, Nov. 20, 1996; 64 FR 28591, May 26, 1999; 67 FR 40423, June 12, 2002; 67 FR 53504, Aug. 16, 2002.

(cc) 40 CFR 75.17(a)(2)(i)(B); "Specific provisions for monitoring emissions from common, bypass, and multiple stacks for NO_x emission rate;" 58 FR 3701, Jan. 11, 1993, as amended at 60 FR 26523, May 17, 1995; 63 FR 57499, Oct. 27, 1998; 64 FR 28592, May 26, 1999; 67 FR 40424, June 12, 2002.

(dd) 40 CFR 75.18; "Specific provisions for monitoring emissions from common and by-pass stacks for opacity;" 58FR 3701, Jan. 11, 1993, as amended at 60FR 26524, May 17, 1995; 60FR 40296, Aug. 8, 1995; 61FR 59158, Nov. 20, 1996.

(ee) 40 CFR 75.20(b)(3); "Initial certification and recertification procedures;" 58 FR 3701, Jan. 11, 1993, as amended at 60 FR 26524, May 17, 1995; 60 FR 40296, Aug. 8, 1995; 61 FR 59158, Nov. 20, 1996; 63 FR 57506, Oct. 27, 1998; 64 FR 28592, May 26, 1999; 67 FR 40431, June 12, 2002.

(ff) 40 CFR 75.53; "Monitoring plan;" 58 FR 3701, Jan. 11, 1993, as amended at 60 FR 26532, 26568, May 17, 1995; 61 FR 59161, Nov. 20, 1996; 64 FR 28605, May 26, 1999.

(gg) 40 CFR 75.62; "Monitoring plan submittals;" 58 FR 3701, Jan. 11, 1993, as amended at 60 FR 26539, May 17, 1995; 64 FR 28621, May 26, 1999; 67 FR 40443, June 12, 2002.

(hh) 40 CFR 75.67; "Retired units petitions;" 60 FR 17131, Apr. 4, 1995, as amended at 60 FR 26541, May 17, 1995; 62 FR 55487, Oct. 24, 1997.

(ii) 40 CFR 75.74(c)(11); "Annual and ozone season monitoring and reporting requirements;" 63 FR 57507, Oct. 27, 1998, as amended at 64 FR 28627, May 26, 1999; 67 FR 40446, 40447, June 12, 2002; 67 FR 57274, Sept. 9, 2002.

(jj) 40 CFR 76.8; "Early election for Group 1, Phase II boilers;" 60 FR 18761, Apr. 13, 1995, as amended at 61 FR 67163, Dec. 19, 1996.

(kk) 40 CFR 76.13; "Compliance and excess emissions;" 60 FR 18761, Apr. 13, 1995.

(ll) 40 CFR 77.6; "Penalties for excess emissions of sulfur dioxide and nitrogen oxides;" 58 FR 3757, Jan. 11, 1993, as amended at 60 FR 17131, Apr. 4, 1995; 62 FR 55487, Oct. 24, 1997.

(mm) 40 CFR 78.3; "Petition for administrative review and request for evidentiary hearing;" 58 FR 3760, Jan. 11, 1993, as amended at 60 FR 17132, Apr. 4, 1995; 62 FR 55488, Oct. 24, 1997; 69 FR 21645, Apr. 21, 2004.

(nn) 40 CFR Part 60; "Standards of Performance for New Stationary Sources;" as published in the July 1, 2010 Code of Federal Regulations.

(oo) 40 CFR Part 60, Appendix A, Method 19; "Determination of Sulfur Dioxide Removal Efficiency and Particulate Matter, Sulfur Dioxide, and Nitrogen Oxide Emission Rates;" as published in the July 1, 2010 Code of Federal Regulations.

(pp) 40 CFR Part 70; "State operating permit programs;" 57 FR 32295, July 21, 1992, as amended at 61 FR 31448, June 20, 1996; 61 FR 56370, Oct. 31, 1996; 66 FR 27010, May 15, 2001; 66 FR 59166, Nov. 27, 2001; 69 FR 31505, June 3, 2004.

(qq) 40 CFR Part 71; "Federal operating permit programs;" 59 FR 59924, Nov. 21, 1994, as amended at 61 FR 34228, July 1, 1996; 62 FR 54947, Oct. 22, 1997; 64 FR 8262, Feb. 19, 1999; 64 FR 8263, Feb. 19, 1999; 66 FR 12876, Mar. 1, 2001; 66 FR 55885, Nov. 5, 2001; 67 FR 38330, June 3, 2002; 68 FR 38523, June 27, 2003; 69 FR 31505, June 2, 2004.

(rr) 40 CFR Part 72; "Permits regulation;" 58 FR 3650, Jan. 11, 1993, as amended at 58 FR 15647, Mar. 23, 1993; 58 FR 15648, Mar. 23, 1993; 58 FR 15649, Mar. 23, 1993; 58 FR 33770, June 21, 1993; 58 FR 40747, July 30, 1993; 59 FR 60230, 60238, Nov. 22, 1994; 59 FR 60231, Nov. 22, 1994; 60 FR 17111, 17113, 17114, Apr. 4, 1995; 60 FR 18468, 18470, Apr. 11, 1995; 60 FR 26514, 26526, May 17, 1995; 62 FR 55475-55478, 55480-

55485, Oct. 24, 1997; 62 FR 66279, Dec. 18, 1997; 63 FR 57498, Oct. 27, 1998; 63 FR 68404, Dec. 11, 1998; 64 FR 25842, May 13, 1999; 64 FR 28586, 28588, May 26, 1999; 66 FR 12978, Mar. 1, 2001; 67 FR 40420, June 12, 2002; 67 FR 53504, Aug. 16, 2002; 70 FR 25334, May 12, 2005; 70 FR 28677, May 18, 2005.

(ss) 40 CFR Part 72, Appendix D; "Calculation of potential electric output capacity;" 58 FR 15649, Mar. 23, 1993.

(tt) 40 CFR Part 72, Subpart A; "Acid rain program general provisions;" 58 FR 3650, Jan. 11, 1993, as amended at 58 FR 15647, 15648, Mar. 23, 1993; 58 FR 33770, June 21, 1993; 58 FR 40747, July 30, 1993; 60 FR 17111, 17113, Apr. 4, 1995; 60 FR 18468, Apr. 11, 1995; 60 FR 26514, 26526, May 17, 1995; 62 FR 55475-55478, Oct. 24, 1997; 62 FR 66279, Dec. 18, 1997; 63 FR 57498, Oct. 27, 1998; 63 FR 68404, Dec. 11, 1998; 64 FR 25842, May 13, 1999; 64 FR 28586, 28588, May 26, 1999; 66 FR 12978, Mar. 1, 2001; 67 FR 40420, June 12, 2002; 67 FR 53504, Aug. 16, 2002; 70 FR 25334, May 12, 2005; 70 FR 28677, May 18, 2005; 71 FR 25377, 25378, April 28, 2006.

(uu) 40 CFR Part 72, Subpart B; "Designated representative;" 58 FR 3650, Jan. 11, 1993, as amended at 60 FR 17113, Apr. 4, 1995; 62 FR 55480, Oct. 24, 1997; 70 FR 25334, May 12, 2005.

(vv) 40 CFR Part 72, Subpart D; "Acid rain compliance plan and compliance options;" 58 FR 3650, Jan. 11, 1993, as amended at 58 FR 15649, Mar. 23, 1993; 58 FR 40747, July 30, 1993; 59 FR 60230, 60238, Nov. 22, 1994; 60 FR 17113, Apr. 4, 1995; 60 FR 18470, Apr. 11, 1995; 62 FR 55481, Oct. 24, 1997; 64 FR 25842, May 13, 1999; 70 FR 25334, May 12, 2005.

(ww) 40 CFR Part 72, Subpart F; "Federal acid rain permit issuance procedures;" 58 FR 3650, Jan. 11, 1993, as amended at 62 FR 55481, Oct. 24, 1997; 62 FR 55482, Oct. 24, 1997.

(xx) 40 CFR Part 72, Subpart G; "Acid rain phase II implementation;" 58 FR 3650, Jan. 11, 1993, as amended at 60 FR 17113, Apr. 4, 1995; 62 FR 55482, Oct. 24, 1997; 66 FR 12978, Mar. 1, 2001; 70 FR 25334, May 12, 2005; 62 FR 55482, Oct. 24, 1997, as amended at 66 FR 12978, Mar. 1, 2001.

(yy) 40 CFR Part 72, Subpart H; "Permit revisions;" 58 FR 3650, Jan. 11, 1993, as amended at 60 FR 17114, Apr. 4, 1995; 62 FR 55484, 55485, Oct. 24, 1997; 66 FR 12978, Mar. 1, 2001.

(zz) 40 CFR Part 72, Subpart I; "Compliance certification;" 58 FR 3650, Jan. 11, 1993, as amended at 58 FR 40747, July 30, 1993; 59 FR 60231, Nov.

22, 1994; 60 FR 18470, Apr. 11, 1995; 62 FR 55485, Oct. 24, 1997; 64 FR 28588, May 26, 1999; 70 FR 25334, May 12, 2005.

(aaa) 40 CFR Part 73, Appendix A, Section 1; "Demand-side Measures Applicable for the Conservation and Renewable Energy Reserve Program or Reduced Utilization;" 58 FR 3695, Jan. 11, 1993.

(bbb) 40 CFR Part 73, Appendix A, Section 2.1; "Generation efficiency;" 58 FR 3695, Jan. 11, 1993.

(ccc) 40 CFR Part 73; "Sulfur dioxide allowance system;" 56 FR 65601, Dec. 17, 1991, as amended at 61 FR 28763, June 6, 1996; 63 FR 5735, Feb. 4, 1998; 63 FR 51766, Sept. 28, 1998; 58 FR 3687, Jan. 11, 1993, as amended at 58 FR 3694, 3695, Jan. 11, 1993; 58 FR 40747, July 30, 1993; 58 FR 15650, 15708, 15714, Mar. 23, 1993; 58 FR 33770, June 21, 1993; 58 FR 40747, July 30, 1993; 60 FR 17114, Apr. 4, 1995; 61 FR 28763, June 6, 1996; 63 FR 68404, Dec. 11, 1998; 62 FR 34150, June 24, 1997; 62 FR 55486, Oct. 24, 1997; 63 FR 51714, 51765, Sept. 28, 1998; 63 FR 68404, Dec. 11, 1998; 64 FR 25842, May 13, 1999; 70 FR 25335, 25336, May 12, 2005.

(ddd) 40 CFR Part 73, Subpart B; "Allowance allocations;" 58 FR 3687, Jan. 11, 1993, as amended at 58 FR 15650, 15708, 15710, 15711, 15713, 15714, Mar. 23, 1993; 58 FR 33770, June 21, 1993; 58 FR 40747, July 30, 1993; 62 FR 34150, June 24, 1997; 62 FR 55486, Oct. 24, 1997; 63 FR 51714, 51765, Sept. 28, 1998; 70 FR 25335, May 12, 2005.

(eee) 40 CFR Part 73, Subpart C; "Allowance tracking system;" 58 FR 3687, Jan. 11, 1993; as amended at 60 FR 17114, Apr. 4, 1995; 63 FR 68404, Dec. 11, 1998; 64 FR 25842, May 13, 1999; 70 FR 25335, May 12, 2005; 70 FR 25336, May 12, 2005; 58 FR 40747, July 30, 1993.

(fff) 40 CFR Part 73, Subpart D; "Allowance transfers;" 58 FR 3694, Jan. 11, 1993, as amended at 60 FR 17114, Apr. 4, 1995; 63 FR 68404, Dec. 11, 1998; 70 FR 25336, May 12, 2005.

(ggg) 40 CFR Part 74; "Sulfur dioxide opt-ins;" 60 FR 17115, Apr. 4, 1995, as amended at 62 FR 55487, Oct. 24, 1997; 63 FR 18841, 18842, Apr. 16, 1998; 66 FR 12978, Mar. 1, 2001; 70 FR 25336, 25337, May 12, 2005; 71 FR 25379, Apr. 28, 2006.

(hhh) 40 CFR Part 75; "Continuous emission monitoring;" as published in the July 1, 2010 Code of Federal Regulations.

(iii) 40 CFR Part 75, Appendix B; "Quality assurance and quality control procedures;" 58 FR 3701, Jan. 11, 1993, as amended at 60 FR 26546,

26571, May 17, 1995; 61 FR 59165, Nov. 20, 1996; 64 FR 28644, May 26, 1999; 64 FR 37582, July 12, 1999; 67 FR 40456, 40457, June 12, 2002; 67 FR 53505, Aug. 16, 2002; 67 FR 57274, Sept. 9, 2002; 70 FR 28693, May 18, 2005.

(jjj) 40 CFR Part 75, Appendix B, Section 2.1.1; "Calibration Error Test;" 58 FR 3701, Jan. 11, 1993, as amended at 60 FR 26546, 26571, May 17, 1995; 61 FR 59165, Nov. 20, 1996; 64 FR 28644, May 26, 1999; 64 FR 37582, July 12, 1999; 67 FR 40456, 40457, June 12, 2002; 67 FR 53505, Aug. 16, 2002; 67 FR 57274, Sept. 9, 2002; 70 FR 28693, May 18, 2005.

(kkk) 40 CFR Part 75, Appendix F; "Conversion procedures;" 58 FR 3701, Jan. 11, 1993; Redesignated and amended at 60 FR 26553-26556, 26571, May 17, 1995; 61 FR 25585, May 22, 1996; 61 FR 59166, Nov. 20, 1996; 63 FR 57513, Oct. 27, 1998; 64 FR 28666-28671, May 26, 1999; 64 FR 37582, July 12, 1999; 67 FR 40474, 40475, June 12, 2002; 67 FR 53505, Aug. 16, 2002; 70 FR 28695, May 18, 2005.

(lll) 40 CFR Part 75, Subpart H; "NOx mass emissions provisions;" 3 FR 57507, 57508, Oct. 27, 1998, as amended at 64 FR 28624, 28627, May 26, 1999; 67 FR 40444, 40445, 40446, 40447, June 12, 2002; 67 FR 53505, Aug. 16, 2002; 67 FR 57274, Sept. 9, 2002.

(mmm) 40 CFR Part 76; "Acid rain nitrogen oxides emission reduction program;" 60 FR 18761, Apr. 13, 1995, as amended at 61 FR 67162, Dec. 19, 1996; 61 FR 67163, Dec. 19, 1996; 62 FR 3464, Jan. 23, 1997; 62 FR 32040, June 12, 1997; 64 FR 55838, Oct. 15, 1999.

(nnn) 40 CFR Part 77; "Excess emissions;" 58 FR 3757, Jan. 11, 1993, as amended at 60 FR 17131, Apr. 4, 1995; 62 FR 55487, Oct. 24, 1997; 62 FR 66279, Dec. 18, 1997; 70 FR 25337, May 12, 2005.

(ooo) 40 CFR Part 78; "Appeal procedures for acid rain program;" 58 FR 3760, Jan. 11, 1993, as amended at 60 FR 17132, Apr. 4, 1995; 62 FR 55488, Oct. 24, 1997; 62 FR 66279, Dec. 18, 1997; 66 FR 12978, Mar. 1, 2001; 69 FR 21644, 21645, Apr. 21, 2004; 70 FR 25338, 25339, May 12, 2005.

(ppp) 42 USC 7401; "Congressional findings and declaration of purpose;" published January 5, 2010 in Supplement III of the 2006 Edition of the United States Code.

(qqq) 42 USC 7401 through 7671q; "The Public Health and Welfare -Air Pollution Prevention and Control;" published January 5, 2010 in Supplement III of the 2006 Edition of the United States Code.

(rrr) ASME performance test code 4.2 (1991), "Test Code for Coal Pulverizers;" 1991.

(sss) ASTM D388-92, "Standard Classifications of Coals by Rank;" 1992.

(ttt) ASTM D396-90a, "Standard Specification for Fuel Oils;" 1990.

(uuu) ASTM D975-91, "Standard Specification for Diesel Fuel Oils;" 1991.

(vvv) ASTM D2880-90a, "Standard Specification for Gas Turbine Fuel Oils;" 1990.

(www) ASTM D3172-89, "Standard Practice for Proximate Analysis of Coal and Coke;" 1989.

(xxx) ASTM D3176-89, "Standard Practice for Ultimate Analysis of Coal and Coke;" 1989.

(yyy) EIA-767 (2004); "Steam-Electric Plant Operation and Design Report;" OMB No. 1905-0129 (OMB approval expires 11/30/2007 for the 2004 form).

(zzz) EPA-600/R97/121; "EPA Traceability Protocol for Assay and Certification of Gaseous Calibration Standards;" September 1997, amended by procedure G2, August 25, 1999.

(aaaa) Federal Power Act; contained in 16 USC 791 to 828c; "Federal Regulation and Development of Power;" published January 5, 2010 in Supplement III of the 2006 Edition of the United States Code.

(bbbb) ISO 9931 (1991), "Coal - Sampling of Pulverized Coal Conveyed by Gases in Direct Fired Coal Systems, 1991."

(cccc) Section 3 of the Federal Power Act, contained in 16 USC 796; "Federal Regulation and Development of Power; Definitions" published January 5, 2010 in Supplement III of the 2006 Edition of the United States Code.

(dddd) Section 111 of the Clean Air Act, contained in 42 USC 7411; "Standards of performance for new stationary sources;" published January 5, 2010 in Supplement III of the 2006 Edition of the United States Code.

(eeee) Section 113 of the Clean Air Act, contained in 42 USC 7413; "Federal enforcement;" published January 5, 2010 in Supplement III of the 2006 Edition of the United States Code.

(ffff) Section 402 of the Clean Air Act, contained in 42 USC 7651a; "Definitions;" published January 5, 2010 in Supplement III of the 2006 Edition of the United States Code.

(gggg) Section 403 of the Clean Air Act, contained in 42 USC 7651b; "Sulfur dioxide allowance program for existing and new units;" published January 5, 2010 in Supplement III of the 2006 Edition of the United States Code.

(hhhh) Section 404 of the Clean Air Act, contained in 42 USC 7651c; "Phase I sulfur dioxide requirements;" published January 5, 2010 in Supplement III of the 2006 Edition of the United States Code.

(iiii) Section 405 of the Clean Air Act, contained in 42 USC 7651d; "Phase II sulfur dioxide requirements;" published January 5, 2010 in Supplement III of the 2006 Edition of the United States Code.

(jjjj) Section 406 of the Clean Air Act, contained in 42 USC 7651e; "Allowances for States with emissions rates at or below 0.80 lbs/mmBtu;" published January 5, 2010 in Supplement III of the 2006 Edition of the United States Code.

(kkkk) Section 407 of the Clean Air Act, contained in 42 USC 7651f; "Nitrogen oxides emission reduction program;" published January 5, 2010 in Supplement III of the 2006 Edition of the United States Code.

(llll) Section 409 of the Clean Air Act, contained in 42 USC 7651h; "Repowered sources;" published January 5, 2010 in Supplement III of the 2006 Edition of the United States Code.

(mmmm) Section 410 of the Clean Air Act, contained in 42 USC 7651i; "Election for additional sources;" published January 5, 2010 in Supplement III of the 2006 Edition of the United States Code.

(nnnn) Title I of the Clean Air Act, contained in 42 USC 7401-7431, 7470-7479, 7491, 7492, 7501-7509a, 7511-7515; "Provisions for attainment and maintenance of national ambient air quality standards;" published January 5, 2010 in Supplement III of the 2006 Edition of the United States Code.

(oooo) Title IV of the Clean Air Act, contained in 42 USC 7651 through 7651o; "Acid deposition control;" published January 5, 2010 in Supplement III of the 2006 Edition of the United States Code.

(pppp) Title V of the Clean Air Act, contained in 42 USC 7661 through 7661f; "Permits;" published January 5, 2010 in Supplement III of the 2006 Edition of the United States Code.

(qqqq) USEPA Form 7610-16; “Acid Rain Permit Application;” revised December, 2009.

Effective: 11/10/2011

R.C. 119.032 review dates: 08/24/2011 and 08/24/2016

CERTIFIED ELECTRONICALLY
Certification

10/31/2011
Date

Promulgated Under: 119.03
Statutory Authority: 3704.03(E)
Rule Amplifies: 3704.03(A), 3704.03(E)
Prior Effective Dates: 9/10/97, 6/27/02, 1/12/07

3745-103-02 **Applicability.**

[Comment: For dates of non-regulatory government publications, publications of recognized organizations and associations, federal rules, and federal statutory provisions referenced in this rule, see paragraph (C) of rule 3745-103-01 of the Administrative Code titled "Referenced materials."]

(A) Each of the following units shall be an affected unit, and any source that includes such a unit shall be an affected source, subject to the requirements of the acid rain program:

(1) A unit listed in Table 1 of 40 CFR 73.10(a).

(2) An existing unit that is identified in Table 2 or 3 of 40 CFR 73.10 and any other existing utility unit, except a unit under paragraph (B) of this rule.

(3) A utility unit, except a unit under paragraph (B) of this rule, that:

(a) Is a new unit; or

(b) Did not serve a generator with a nameplate capacity greater than twenty-five MWe on November 15, 1990 but serves such a generator after November 15, 1990.

(c) Was a simple combustion turbine on November 15, 1990 but adds or uses auxiliary firing after November 15, 1990;

(d) Was an exempt cogeneration facility under paragraph (B)(4) of this rule but during any three calendar year period after November 15, 1990 sold, to a utility power distribution system, an annual average of more than one-third of its potential electrical output capacity and more than two hundred nineteen thousand MWe-hrs electric output, on a gross basis;

(e) Was an exempt qualifying facility under paragraph (B)(5) of this rule but, at any time after the later of November 15, 1990 or the date the facility commences commercial operation, fails to meet the definition of qualifying facility;

(f) Was an exempt independent power production facility under paragraph (B)(6) of this rule but, at any time after the later of November 15, 1990 or the date the facility commences commercial operation, fails to meet the definition of independent power production facility; or

(g) Was an exempt solid waste incinerator under paragraph (B)(7) of this rule but during any three calendar year period after November 15, 1990 consumes twenty per cent or more (on a Btu basis) fossil fuel.

(B) The following types of units are not affected units subject to the requirements of the acid rain program:

(1) Any simple combustion turbine that commenced commercial operation before November 15, 1990.

(2) Any unit that commenced commercial operation before November 15, 1990 and that did not, as of November 15, 1990, and does not currently, serve a generator with a nameplate capacity of greater than twenty-five MWe.

(3) Any unit that, during 1985, did not serve a generator that produced electricity for sale and that did not, as of November 15, 1990, and does not currently, serve a generator that produces electricity for sale.

(4) Any cogeneration facility which:

(a) For a unit that commenced construction on or prior to November 15, 1990, was constructed for the purpose of supplying equal to or less than one-third its potential electrical output capacity equal or two hundred nineteen thousand MWe-hrs actual electric output on an annual basis to any utility power distribution system for sale (on a gross basis). If the purpose of construction is not known, it will be presumed to be consistent with the actual operation from 1985 through 1987. However, if in any three calendar year period after November 15, 1990, such unit sells to a utility power distribution system an annual average of more than one-third of its potential electrical output capacity and more than two hundred nineteen thousand MWe-hrs actual electric output (on a gross basis), that unit shall be an affected unit, subject to the requirements of the acid rain program; or

(b) For units that commenced construction after November 15, 1990, supplies equal to or less than one-third its potential electrical output capacity or equal to or less than two hundred nineteen thousand MWe-hrs actual electric output on an annual basis to any utility power distribution system for sale (on a gross basis). However, if in any three calendar year period after November 15, 1990, such unit sells to a utility power distribution system an annual average of more than one-third of its potential electrical output capacity and more than two hundred nineteen thousand MWe-hrs actual electric output (on a gross basis), that unit shall be an affected unit, subject to the requirements of the acid rain program.

(5) A qualifying facility that:

(a) Has, as of November 15, 1990, one or more qualifying power purchase commitments to sell at least fifteen per cent of its total planned net output capacity; and

(b) Consists of one or more units designated by the owner or operator with total installed net output capacity not exceeding one hundred thirty per cent of the total planned net output capacity. If the emissions rates of the units are not the same, the USEPA may exercise discretion to designate which units are exempt.

(6) An independent power production facility that:

(a) Has, as of November 15, 1990, one or more qualifying power purchase commitments to sell at least fifteen per cent of its total planned net output capacity; and

(b) Consists of one or more units designated by the owner or operator with total installed net output capacity not exceeding one hundred thirty per cent of its total planned net output capacity. If the emissions rates of the units are not the same, the USEPA may exercise discretion to designate which units are exempt.

(7) A solid waste incinerator, if more than eighty per cent (on a Btu basis) of the annual fuel consumed at such incinerator is other than fossil fuels. For solid waste incinerators which began operation before January 1, 1985, the average annual fuel consumption of non-fossil fuels for calendar years 1985 through 1987 must be greater than eighty per cent for such an incinerator to be exempt. For solid waste incinerators which began operation after January 1, 1985, the average annual fuel consumption of non-fossil fuels for the first three years of operation must be greater than eighty per cent for such an incinerator to be exempt. If, during any three calendar year period after November 15, 1990, such incinerator consume twenty per cent or more (on a Btu basis) fossil fuel, such incinerator will be an affected source under the acid rain program.

(8) A non-utility unit.

(9) A unit for which an exemption under rule 3745-103-03 or 3745-103-04 of the Administrative Code is in effect. Although such a unit is not an affected unit, the unit shall be subject to the requirements of rule 3745-103-03 or 3745-103-04, of the Administrative Code, as applicable to the exemption.

(C) A certifying official of an owner or operator of any unit may petition the USEPA for a determination of applicability under this rule.

(1) Petition content. The petition shall be in writing and include identification of the unit and relevant facts about the unit. In the petition, the certifying official shall

certify, by the official's signature, the statement set forth in paragraph (A)(2)(b) of rule 3745-103-06 of the Administrative Code. Within ten business days of receipt of any written determination by the USEPA covering the unit, the certifying official shall provide each owner or operator of the unit, facility, or source with a copy of the petition and a copy of the USEPA's response.

(2) Timing. The petition may be submitted to the USEPA at any time but, if possible, should be submitted prior to the issuance (including renewal) of a phase II acid rain permit for the unit.

Effective: 11/10/2011

R.C. 119.032 review dates: 08/24/2011 and 08/24/2016

CERTIFIED ELECTRONICALLY
Certification

10/31/2011
Date

Promulgated Under: 119.03
Statutory Authority: 3704.03(E)
Rule Amplifies: 3704.03(A), 3704.03(E)
Prior Effective Dates: 9/10/97, 6/27/02, 1/12/07

3745-103-03 **New units exemption.**

[Comment: For dates of non-regulatory government publications, publications of recognized organizations and associations, federal rules, and federal statutory provisions referenced in this rule, see paragraph (C) of rule 3745-103-01 of the Administrative Code titled "Referenced materials."]

(A) Applicability. This rule applies to any new utility unit that has not previously lost an exemption and:

(1) Serves during the entire year (except for any period before the unit commenced commercial operation) one or more generators with total nameplate capacity of twenty-five MWe or less;

(2) Burns fuel that does not include any coal or coal-derived fuel (except coal-derived gaseous fuel with a total sulfur content no greater than natural gas); and

(3) Burns gaseous fuel with an annual average sulfur content of 0.05 per cent or less by weight and nongaseous fuel with an annual average sulfur content of 0.05 per cent or less by weight (as determined under paragraph (D) of this rule).

(B) Exemption

(1) Any new utility unit that meets the requirements of paragraph (A) of this rule and that is not allocated any allowances under 40 CFR Part 73, Subpart B shall be exempt from the provisions of rules 3745-103-02 and 3745-103-06 of the Administrative Code.

(2) The exemption under paragraph (B)(1) of this rule shall be effective on January first of the first full calendar year for which the unit meets the requirements of paragraph (A) of this rule. By December thirty-first of the first year for which the unit is to be exempt under this rule, a statement signed by the designated representative (authorized in accordance with rule 3745-103-06 of the Administrative Code) or, if no designated representative has been authorized, a certifying official of each owner of the unit shall be submitted to the director and to the USEPA. The statement, which shall be in a format prescribed by the director and the USEPA, shall identify the unit, state the nameplate capacity of each generator served by the unit and the fuels currently burned or expected to be burned by the unit and their sulfur content by weight, and state that the owners and operators of the unit will comply with paragraph (F) of this rule.

(3) After receipt of the statement under paragraph (B)(2) of this rule, the director shall amend under rule 3745-103-18 of the Administrative Code the operating permit covering the source at which the unit is located, if the source has such a

permit, to add the provisions and requirements of the exemption under paragraphs (A), (B)(1), (D), and (F) of this rule.

(C) Further requirements

(1) Any new utility unit that meets the requirements of paragraph (A) of this rule and that is allocated one or more allowances under 40 CFR Part 73, Subpart B shall be exempt from the acid rain program, except for the provisions of rules 3745-103-02 and 3745-103-06 of the Administrative Code, if each of the following requirements are met:

(a) The designated representative (authorized in accordance with rule 3745-103-06 of the Administrative Code) or, if no designated representative has been authorized, a certifying official of each owner of the unit submits to the director as the person responsible for administering a phase II acid rain permit for the unit a statement (in a format prescribed by the director) that:

(i) Identifies the unit and states the nameplate capacity of each generator served by the unit, and the fuels currently burned or expected to be burned by the unit and their sulfur content by weight;

(ii) States that the owners or operators of the unit will comply with paragraph (F) of this rule;

(iii) Surrenders allowances equal in number to, and with the same or earlier compliance use date as, all of those allocated to the unit under 40 CFR Part 73, Subpart B for the first year that the unit is to be exempt under this rule and for each subsequent year; and

(iv) Surrenders any proceeds for allowances under paragraph (C)(1)(a)(ii) of this rule withheld for the unit under 40 CFR 73.10. A copy of the statement shall be submitted to the USEPA.

(b) The USEPA deducts from the compliance account of the source that includes the unit allowances under paragraph (C)(1)(a)(iii) of this rule and receives proceeds under paragraph (C)(1)(a)(iv) of this rule. Within five business days of receiving a statement in accordance with paragraph (C)(1)(a) of this rule, the USEPA shall either deduct the allowances under paragraph (C)(1)(a)(iii) of this rule or notify the owners and operators that there are insufficient allowances to make such deductions.

(2) The exemption under paragraph (C)(1) of this rule shall be effective on January first of the first full calendar year for which the requirements of paragraphs (A) and (C)(1) of this rule are met. After notification by the USEPA under the third sentence of paragraph (C)(1)(b) of this rule, the director shall amend under rule 3745-103-18 of the Administrative Code, the operating permit covering the

source at which the unit is located, if the source has such a permit, to add the provisions and requirements of the exemption under paragraphs (A), (C)(1), (D) and (F) of this rule.

(D) Compliance with the requirement that fuel burned during the year have an annual average sulfur content of 0.05 per cent by weight or less shall be determined as follows using a method of determining sulfur content that provides information with reasonable precision, reliability, accessibility, and timeliness:

(1) For gaseous fuel burned during the year, if natural gas is the only gaseous fuel burned, the requirement is assumed to be met;

(2) For gaseous fuel burned during the year where other gas in addition to or besides natural gas is burned, the requirement is met if the annual average sulfur content is equal to or less than 0.05 per cent by weight. The annual average sulfur content, as percentage by weight, for the gaseous fuel burned shall be calculated as follows:

$$\%S_{annual} = \frac{\sum_{n=1}^{last} \%S_n V_n d_n}{\sum_{n=1}^{last} V_n d_n}$$

where:

$\%S_{annual}$ = annual average sulfur content of the fuel burned during the year by the unit, as a percentage by weight;

$\%S_n$ = sulfur content of the nth sample of the fuel delivered during the year to the unit, as a percentage by weight;

V_n = volume of the fuel in a delivery during the year to the unit of which n^{th} sample is taken, in standard cubic feet; or, for fuel delivered during the year to the unit continuously by pipeline, volume of the fuel delivered starting from when the nth of such fuel is taken until the next sample of such fuel is taken, in standard cubic feet;

d_n = density of the nth sample of the fuel delivered during the year to the unit, in pounds per standard cubic foot; and

n = each sample taken of the fuel delivered during the year to the unit, taken at least once for each delivery; or, for fuel that is delivered during the year to the unit continuously by pipeline, at least once each quarter during which the fuel is delivered.

(3) For nongaseous fuel burned during the year, the requirement is met if the annual average sulfur content is equal to or less than 0.05 per cent by weight. The annual average sulfur content, as a percentage by weight, shall be calculated using the equation in paragraph (D)(2) of this rule. In lieu of the factor, volume times density ($V_n d_n$), in the equation, the factor, mass (M_n), may be used, where M_n is: mass of the nongaseous fuel in a delivery during the year to the unit of which the nth sample is taken, in pounds; or, for fuel delivered during the year to the unit continuously by pipeline, mass of the nongaseous fuel delivered starting from when the nth sample of such fuel is taken until the next sample of such fuel is taken, in pounds.

(E) Additional provisions

(1) A utility unit that was issued a written exemption under this rule and that meets the requirements of paragraph (A) of this rule shall be exempt from the acid rain program, except for the provisions of this rule and rules 3745-103-01 and 3745-103-02 of the Administrative Code and 40 CFR sections 72.3, 72.4, 72.5, 72.10, 72.11, 72.12 and 72.13 and shall be subject to the requirements of paragraphs (A), (D), (E)(2), and (F) of this rule in lieu of the requirements set forth in the written exemption. The director shall amend under rule 3745-103-18 of the Administrative Code the operating permit covering the source at which the unit is located, if the source has such a permit, to add the provisions and requirements of the exemption under this paragraph and paragraphs (A), (D), (E)(2), and (F) of this rule.

(2) If a utility unit under paragraph (E)(1) of this rule is allocated one or more allowances under 40 CFR Part 73, Subpart B, the designated representative (authorized in accordance with 40 CFR Part 72, Subpart B) or, if no designated representative has been authorized, a certifying official of each owner of the unit shall submit to the director, a statement (in a format prescribed by the director) meeting the requirements of paragraphs (C)(1)(a)(iii) and (C)(1)(a)(iv) of this rule. The statement shall be submitted by June 30, 1998. A copy shall be submitted to the USEPA.

(F) Special provisions

(1) The owners and operators and, to the extent applicable, the designated representative of a unit exempt under this rule shall:

(a) Comply with the requirements of paragraph (A) of this rule for all periods for which the unit is exempt under this rule; and

(b) Comply with the requirements of the acid rain program concerning all periods for which the exemption is not in effect, even if such requirements arise, or must be complied with, after the exemption takes effect.

(2) For any period for which the unit is exempt under this rule:

(a) For purposes of applying 40 CFR Parts 70 and 71, the unit shall not be treated as an affected unit under the acid rain program and shall continue to be subject to any other applicable requirements under 40 CFR Parts 70 and 71.

(b) The unit shall not be eligible to be an opt-in source under rules 3745-103-22 to 3745-103-54 of the Administrative Code.

(3) For a period of five years from the date the records are created, the owners and operators of a unit exempt under this rule shall retain at the source that includes the unit records demonstrating that the requirements of paragraph (A) of this rule are met. The five year period for keeping records may be extended for cause, at any time prior to the end of the period, in writing by the director.

(a) Such records shall include, for each delivery of fuel to the unit or for fuel delivered to the unit continuously by pipeline, the type of fuel, the sulfur content, and the sulfur content of each sample taken.

(b) The owners and operators bear the burden of proof that the requirements of paragraph (A) of this rule are met.

(4) Loss of exemption.

(a) On the earliest of the following dates, a unit exempt under paragraph (B), (C), or (E) of this rule shall lose its exemption and for purposes of applying 40 CFR Parts 70 and 71, shall be treated as an affected unit under the acid rain program:

(i) The date on which the unit first serves one or more generators with total nameplate capacity in excess of twenty-five MWe;

(ii) The date on which the unit burns any coal or coal-derived fuel except for coal-derived gaseous fuel with a total sulfur content no greater than natural gas; or

(iii) January first of the year following the year in which the annual average sulfur content for gaseous fuel burned at unit exceeds 0.05 per cent by weight (as determined under paragraph (D) of this rule) or for nongaseous fuel burned at the unit exceeds 0.05 per cent by weight (as determined under paragraph (D) of this rule).

(b) Notwithstanding paragraph (A) of rule 3745-103-07 of the Administrative Code, the designated representative for a unit that loses its exemption under

this rule shall submit a complete acid rain permit application on the later of January 1, 1998 or sixty days after the first date on which the unit is no longer exempt.

(c) For the purpose of applying monitoring requirements under 40 CFR Part 75, a unit that loses its exemption under this rule shall be treated as a new unit that commenced commercial operation on the first date on which the unit is no longer exempt.

Effective: 11/10/2011

R.C. 119.032 review dates: 08/24/2011 and 08/24/2016

CERTIFIED ELECTRONICALLY
Certification

10/31/2011
Date

Promulgated Under: 119.03
Statutory Authority: 3704.03(E)
Rule Amplifies: 3704.03(A), 3704.03(E)
Prior Effective Dates: 9/10/97, 6/27/02, 1/12/07

3745-103-04 **Retired units exemption.**

[Comment: For dates of non-regulatory government publications, publications of recognized organizations and associations, federal rules, and federal statutory provisions referenced in this rule, see paragraph (C) of rule 3745-103-01 of the Administrative Code titled "Referenced materials."]

(A) This rule applies to any affected unit (except for an opt-in source) that is permanently retired.

(B) Provisions

(1) Any affected unit (except for an opt-in source) that is permanently retired shall be exempt from the acid rain program, except for the provisions of rules 3745-103-01 and 3745-103-02 of the Administrative Code, and 40 CFR Part 73, Subpart B.

(2) The exemption under paragraph (B)(1) of this rule shall become effective on January first of the first full calendar year during which that the unit is permanently retired. By December thirty-first of the first year that the unit is to be exempt under this rule, the designated representative (authorized in accordance with rule 3745-103-06 of the Administrative Code), or, if no designated representative has been authorized, a certifying official of each owner of the unit shall submit a statement to the director. A copy of the statement shall be submitted to USEPA. The statement shall state (in a format prescribed by the USEPA) that the unit is permanently retired and will comply with the requirements of paragraph (D) of this rule.

(3) After receipt of the notice under paragraph (B)(2) of this rule, the director shall amend under rule 3745-103-18 of the Administrative Code the operating permit covering the source at which the unit is located, if the source has such a permit, to add the provisions and requirements of the exemption under paragraphs (B)(1) and (D) of this rule.

(C) A unit that was issued a written exemption under this rule and that is permanently retired shall be exempt from the acid rain program, except for the provisions of this rule, rules 3745-103-01 and 3745-103-02 of the Administrative Code, and subpart B of 40 CFR Part 73, and shall be subject to the requirements of paragraph (D) of this rule in lieu of the requirements set forth in the written exemption. The director shall amend under rule 3745-103-18 of the Administrative Code the operating permit covering the source at which the unit is located, if the source has such a permit, to add the provisions and requirements of the exemption under this paragraph and paragraph (D) of this rule.

(D) Special provisions.

(1) A unit exempted under this rule shall not emit any sulfur dioxide and nitrogen oxides starting on the date the exemption takes effect. The owners and operators of the unit will be allocated allowances in accordance with 40 CFR Part 73, Subpart B.

(2) A unit exempt under this rule shall not resume operation unless the designated representative of the source that includes the unit submits a complete acid rain permit application under rule 3745-103-07 of the Administrative Code for the unit not less than twenty-four months prior to the date on which the unit is to resume operation.

(3) The owners and operators and, to the extent applicable, the designated representative of a unit exempt under this rule shall comply with the requirements of the acid rain program concerning all periods for which the exemption is not in effect, even if such requirements arise, or must be complied with, after the exemption takes effect.

(4) For any period for which a unit is exempt under this rule:

(a) For purposes of applying 40 CFR Parts 70 and 71, the unit shall not be treated as an affected unit under the acid rain program and shall continue to be subject to any other applicable requirements under 40 CFR Parts 70 and 71.

(b) The unit shall not be eligible to be an opt-in source under rules 3745-103-22 to 3745-103-54 of the Administrative Code.

(5) For a period of five years from the date the records are created the owners and operators of a unit exempt under this rule shall retain at the source that includes the unit records demonstrating that the unit is permanently retired. The five year period for keeping records may be extended for cause, at any time prior to the end of the period, in writing by the director. The owners and operators bear the burden of proof that the unit is permanently retired.

(6) Loss of exemption.

(a) On the earlier of the following dates, a unit exempt under paragraph (B) or (C) of this rule shall lose its exemption under the acid rain program and 40 CFR Parts 70 and 71:

(i) The date on which the designated representative submits an acid rain permit application under paragraph (D)(2) of this rule; or

(ii) The date on which the designated representative is required under paragraph (D)(2) of this rule to submit an acid rain permit application.

(b) For the purpose of applying monitoring requirements under 40 CFR Part 75, a unit that loses its exemption under this rule shall be treated as a new unit that commenced commercial operation on the first date on which the unit resumes operation.

Effective: 11/10/2011

R.C. 119.032 review dates: 08/24/2011 and 08/24/2016

CERTIFIED ELECTRONICALLY
Certification

10/31/2011
Date

Promulgated Under: 119.03
Statutory Authority: 3704.03(E)
Rule Amplifies: 3704.03(A), 3704.03(E)
Prior Effective Dates: 9/10/97, 6/27/02, 1/12/07

3745-103-05 **Standard requirements.**

[Comment: For dates of non-regulatory government publications, publications of recognized organizations and associations, federal rules, and federal statutory provisions referenced in this rule, see paragraph (C) of rule 3745-103-01 of the Administrative Code titled "Referenced materials."]

(A) Permit requirements.

(1) The designated representative of each affected source and each affected unit at the source shall:

(a) Submit a complete acid rain permit application under this chapter in accordance with the deadlines specified in rule 3745-103-07 of the Administrative Code;

(b) Submit within thirty days after notification by the director any supplemental information that the director determines is necessary in order to review an acid rain permit application and issue or deny an acid rain permit.

(2) The owners and operators of each affected source and each affected unit at the source shall:

(a) Operate the unit in compliance with a complete acid rain permit application or a superseding acid rain permit issued by the director; and

(b) Have an acid rain permit.

(B) Monitoring requirements.

(1) The owners and operators and, to the extent applicable, designated representative of each affected source and each affected unit at the source shall comply with the monitoring requirements as provided in 40 CFR Part 75 and Section 407 of the Clean Air Act.

(2) The emissions measurements recorded and reported in accordance with 40 CFR Part 75 shall be used to determine compliance by the source or unit, as appropriate, with the acid rain emissions limitations and emissions reduction requirements for sulfur dioxide and nitrogen oxides under the acid rain program.

(3) The requirements of 40 CFR Part 75 shall not affect the responsibility of the owners and operators to monitor emissions of other pollutants or other emissions characteristics at the unit under other applicable requirements of the Clean Air Act and other provisions of the operating permit for the source.

(C) Sulfur dioxide requirements.

(1) The owners and operators of each source and each affected unit at the source shall:

(a) Hold allowances, as of the allowance transfer deadline, in the source's compliance account, after deductions under 40 CFR 73.34(C), not less than the total annual emissions of sulfur dioxide for the previous calendar year from the affected units at the source; and

(b) Comply with the applicable acid rain emissions limitation for sulfur dioxide.

(2) Each ton of sulfur dioxide emitted in excess of the acid rain emissions limitations for sulfur dioxide shall constitute a separate violation of this rule.

(3) An affected unit shall be subject to the requirements under paragraph (C)(1) of this rule as follows:

(a) Starting January 1, 2000, an affected unit under paragraph (A)(2) of rule 3745-103-02 of the Administrative Code; or

(b) Starting on the later of January 1, 2000 or the deadline for monitor certification under 40 CFR Part 75, an affected unit under paragraph (A)(3) of rule 3745-103-02 of the Administrative Code.

(4) Allowances shall be held in, deducted from, or transferred among allowance tracking system accounts in accordance with the acid rain program.

(5) An allowance shall not be deducted in order to comply with the requirements under paragraph (C)(1)(a) of this rule prior to the calendar year for which the allowance was allocated.

(6) An allowance allocated by the USEPA under the acid rain program is a limited authorization to emit sulfur dioxide in accordance with the acid rain program. No provision of the acid rain program, the acid rain permit application, the acid rain permit, or an exemption under rule 3745-103-03 or 3745-103-04 of the Administrative Code and no provision of law shall be construed to limit the authority of the United States to terminate or limit such authorization.

(7) An allowance allocated by the USEPA under the acid rain program does not constitute a property right.

(D) Nitrogen oxides requirements. The owners and operators of the source and each affected unit at the source shall comply with the applicable acid rain emissions limitation for nitrogen oxides.

(E) Excess emissions requirements.

(1) The designated representative of an affected source that has excess emissions in any calendar year shall submit a proposed offset plan to the USEPA, as required under 40 CFR Part 77, and submit a copy to the director.

(2) The owners and operators of an affected source that has excess emissions in any calendar year shall:

(a) Pay to the USEPA without demand the penalty required, and pay to the USEPA upon demand the interest on that penalty, as required by 40 CFR Part 77; and

(b) Comply with the terms of an approved offset plan, as required by 40 CFR Part 77.

(F) Recordkeeping and reporting requirements.

(1) Unless otherwise provided, the owners and operators of the source and each affected unit at the source shall keep on site at the source each of the following documents for a period of five years from the date the document is created. This period may be extended for cause, at any time prior to the end of five years, in writing by the Ohio EPA.

(a) The certificate of representation for the designated representative for the source and each affected unit at the source and all documents that demonstrate the truth of the statements in the certificate of representation, in accordance with 40 CFR 72.24; provided that the certificate and documents shall be retained on site at the source beyond such five year period until such documents are superseded because of the submission of a new certificate of representation changing the designated representative.

(b) All emissions monitoring information, in accordance with 40 CFR Part 75; provided to the extent that 40 CFR Part 75 provides for a three year period of recordkeeping, the three year period shall apply.

(c) Copies of all reports, compliance certifications, and other submissions and all records made or required under the acid rain program.

(d) Copies of all documents used to complete an acid rain permit application and any other submission under the acid rain program or to demonstrate compliance with the requirements of the acid rain program.

(2) The designated representative of an affected source and each affected unit at the source shall submit the reports and compliance certifications required under the acid rain program.

(G) Liability.

(1) Any person who knowingly violates any requirement or prohibition of the acid rain program, a complete acid rain permit application, an acid rain permit, or an exemption under rule 3745-103-03 or 3745-103-04 of the Administrative Code, including any requirement for the payment of any penalty owed to the United States, shall be subject to enforcement by the USEPA pursuant to section 113(C) of the Clean Air Act and by the Ohio EPA pursuant to Chapter 3704. of the Revised Code.

(2) Any person who knowingly makes a false, material statement in any record, submission, or report under the acid rain program shall be subject to criminal enforcement by the USEPA pursuant to section 113(c) of the Clean Air Act and 18 USC 1001 and by the director pursuant to Chapter 3704. of the Revised Code.

(3) No permit revision shall excuse any violation of the requirements of the acid rain program that occurs prior to the date that the revision takes effect.

(4) Each affected source and each affected unit shall meet the requirements of the acid rain program.

(5) Any provision of the acid rain program that applies to an affected source, including a provision applicable to the designated representative of an affected source, shall also apply to the owners and operators of such source and of the affected units at the source.

(6) Any provision of the acid rain program that applies to an affected unit, including a provision applicable to the designated representative of an affected unit, shall also apply to the owners and operators of such unit.

(7) Each violation of a provision of rules 3745-103-01 to 3745-103-66 of the Administrative Code and 40 CFR Parts 72, 73, 74, 75, 76, 77, and 78, by an affected source or affected unit, or by an owner or operator or designated representative of such source or unit, shall be a separate violation.

(H) Effect on other authorities. No provision of the acid rain program, an acid rain permit application, an acid rain permit, or an exemption under rule 3745-103-03 or 3745-103-04 of the Administrative Code shall be construed as:

(1) Except as expressly provided in Title IV of the Clean Air Act, exempting or excluding the owners and operators and, to the extent applicable, the designated representative of an affected source or affected unit from compliance with any other provision of the Clean Air Act, including the provisions of Title I of the

Clean Air Act relating to applicable national ambient air quality standards or state implementation plans;

(2) Limiting the number of allowances a source can hold; provided, that the number of allowances held by the source shall not affect the source's obligation to comply with any other provisions of the Clean Air Act;

(3) Requiring a change of any kind in any Ohio law regulating electric utility rates and charges, affecting any Ohio law regarding such Ohio regulation, or limiting such Ohio regulation, including any prudence review requirements under such Ohio law;

(4) Modifying the Federal Power Act or affecting the authority of the federal energy regulatory commission under the Federal Power Act; or

(5) Interfering with or impairing any program for competitive bidding for power supply in a state in which such program is established.

Effective: 11/10/2011

R.C. 119.032 review dates: 08/24/2011 and 08/24/2016

CERTIFIED ELECTRONICALLY
Certification

10/31/2011
Date

Promulgated Under: 119.03
Statutory Authority: 3704.03(E)
Rule Amplifies: 3704.03(A), 3704.03(E)
Prior Effective Dates: 9/10/97, 6/27/02, 1/12/07

3745-103-06 **Designated representative.**

[Comment: For dates of non-regulatory government publications, publications of recognized organizations and associations, federal rules, and federal statutory provisions referenced in this rule, see paragraph (C) of rule 3745-103-01 of the Administrative Code titled "Referenced materials."]

(A) Submissions.

(1) Each submission under the acid rain program shall be submitted, signed, and certified by the designated representative for all sources on behalf of which the submission is made.

(2) In each submission under the acid rain program, the designated representative shall certify, by the representative's signature:

(a) The following statement, which shall be included verbatim in such submission: "I am authorized to make this submission on behalf of the owners and operators of the source or units for which the submission is made."

(b) The following statement, which shall be included verbatim in such submission: "I certify under penalty of law that I have personally examined, and am familiar with, the statements and information submitted in this document and all its attachments. Based on my inquiry of those individuals with primary responsibility for obtaining the information, I certify that the statements and information are to the best of my knowledge and belief true, accurate, and complete. I am aware that there are significant penalties for submitting false statements and information or omitting required statements and information, including the possibility of fine or imprisonment."

(3) The director shall accept or act on a submission made on behalf of owners or operators of an affected source and an affected unit only if the submission has been made, signed, and certified in accordance with paragraphs (A)(1) and (A)(2) of this rule.

(4) The designated representative of a source shall serve notice on each owner and operator of the source and of an affected unit at the source:

(a) By the date of submission, of any acid rain program submissions by the designated representative;

(b) Within ten business days of receipt of a determination, of any written determination by the USEPA or the Ohio EPA; and

(c) Provided that the submission or determination covers the source or the unit.

(5) The designated representative of a source shall provide each owner and operator of an affected unit at the source a copy of any submission or determination under paragraph (A)(4) of this rule, unless the owner or operator expressly waives the right to receive such a copy.

(B) Objections.

(1) Except as provided in 40 CFR 72.23, no objection or other communication submitted to the USEPA or the director concerning the authorization, or any submission, action or inaction, of the designated representative shall affect any submission, action, or inaction of the designated representative, or the finality of any decision by the Ohio EPA, under the acid rain program. In the event of such communication, the director is not required to stay any submission or the effect of any action or inaction under the acid rain program.

(2) The director shall not adjudicate any private legal dispute concerning the authorization or any submission, action, or inaction of any designated representative, including private legal disputes concerning the proceeds of allowance transfers.

Effective: 11/10/2011

R.C. 119.032 review dates: 08/24/2011 and 08/24/2016

CERTIFIED ELECTRONICALLY
Certification

10/31/2011
Date

Promulgated Under: 119.03
Statutory Authority: 3704.03(E)
Rule Amplifies: 3704.03(A), 3704.03(E)
Prior Effective Dates: 9/10/97, 1/12/07

3745-103-07 **Acid rain permit applications.**

[Comment: For dates of non-regulatory government publications, publications of recognized organizations and associations, federal rules, and federal statutory provisions referenced in this rule, see paragraph (C) of rule 3745-103-01 of the Administrative Code titled "Referenced materials."]

(A) Requirement to apply.

(1) Duty to apply. The designated representative shall submit a complete acid rain permit application for each source with an affected unit at least six months prior to the expiration of an existing acid rain permit governing the unit during phase II or an opt-in permit governing an opt-in source or such longer time as approved by the director under Chapter 3745-77 of the Administrative Code that ensures that the term of the existing permit will not expire before the effective date of the permit for which the application is submitted.

(2) Deadlines.

(a) For any source with an existing unit described under paragraph (A)(2) of rule 3745-103-02 of the Administrative Code, the designated representative shall submit a complete acid rain permit application governing such unit to the director on or before January 1, 1996.

(b) For any source with a new unit described under paragraph (A)(3)(a) of rule 3745-103-02 of the Administrative Code, the designated representative shall submit a complete acid rain permit application governing such unit to the director at least twenty-four months before the later of January 1, 2000 or the date on which the unit commences operation.

(c) For any source with a unit described under paragraph (A)(3)(b) of rule 3745-103-02 of the Administrative Code, the designated representative shall submit a complete acid rain permit application governing such unit to the director at least twenty-four months before the later of January 1, 2000 or the date on which the unit begins to serve a generator with a nameplate capacity greater than twenty-five MWe.

(d) For any source with a unit described under paragraph (A)(3)(c) of rule 3745-103-02 of the Administrative Code the designated representative shall submit a complete acid rain permit application governing such unit to the director at least twenty-four months before the later of January 1, 2000 or the date on which the auxiliary firing commences operation.

(e) For any source with a unit described under paragraph (A)(3)(d) of rule 3745-103-02 of the Administrative Code, the designated representative shall

submit a complete acid rain permit application governing such unit to the director before the later of January 1, 1998 or March first of the year following the three calendar year period in which the unit sold to a utility power distribution system an annual average of more than one-third of its potential electrical output capacity and more than two hundred nineteen thousand MWe-hrs actual electric output on a gross basis.

(f) For any source with a unit described under paragraph (A)(3)(e) of rule 3745-103-02 of the Administrative Code, the designated representative shall submit a complete acid rain permit application governing such unit to the director before the later of January 1, 1998 or March first of the year following the calendar year in which the facility fails to meet the definition of a "qualifying facility."

(g) For any source with a unit described under paragraph (A)(3)(f) of rule 3745-103-02 of the Administrative Code, the designated representative shall submit a complete acid rain permit application governing such unit to the director before the later of January 1, 1998 or March first of the year following the calendar year in which the facility fails to meet the definition of an "independent power production facility."

(h) For any source with a unit described under paragraph (A)(3)(g) of rule 3745-103-02 of the Administrative Code, the designated representative shall submit a complete acid rain permit application governing such unit to the director before the later of January 1, 1998 or March first of the year following the three calendar year period in which the incinerator consumed twenty per cent or more fossil fuel (on a Btu basis).

(B) Acid rain permit application forms.

A complete acid rain permit application shall be submitted on USEPA form 7610-16.

(C) Where two or more affected units are located at a source, the director may, in the director's sole discretion, allow the designated representative of the source to submit, under paragraph (A)(1) of this rule, two or more acid rain permit applications covering the units at the source, provided that each affected unit is covered by only one application.

Effective: 11/10/2011

R.C. 119.032 review dates: 08/24/2011 and 08/24/2016

CERTIFIED ELECTRONICALLY
Certification

10/31/2011
Date

Promulgated Under: 119.03
Statutory Authority: 3704.03(E)
Rule Amplifies: 3704.03(A), 3704.03(E)
Prior Effective Dates: 9/10/97, 6/27/02, 1/12/07

3745-103-08 **Permit application shield and binding effect of permit application.**

[Comment: For dates of non-regulatory government publications, publications of recognized organizations and associations, federal rules, and federal statutory provisions referenced in this rule, see paragraph_(C) of rule 3745-103-01 of the Administrative Code titled "Referenced materials."]

(A) Once a designated representative submits a timely and complete acid rain permit application, the owners and operators of the affected source and the affected units covered by the permit application shall be deemed in compliance with the requirement to have an acid rain permit under paragraph (A)(2) of rule 3745-103-05 and paragraph (A)(1) of rule 3745-103-07 of the Administrative Code; provided that any delay in issuing an acid rain permit is not caused by the failure of the designated representative to submit in a complete and timely fashion supplemental information, as required by the director, necessary to issue a permit.

(B) Prior to the earlier of the date on which an acid rain permit is issued or denied, an affected unit governed by and operated in accordance with the terms and requirements of a timely and complete acid rain permit applications shall be deemed to be operating in compliance with the acid rain program.

(C) A complete acid rain permit application shall be binding on the owners and operators and the designated representative of the affected source and the affected units covered by the permit application and shall be enforceable as an acid rain permit from the date of submission of the complete permit application until the issuance or denial of such permit.

(D) If a permit is appealed under 40 CFR Part 78, issuance or denial of the permit shall occur when the USEPA takes final action subject to judicial review.

(E) 40 CFR Part 78 shall govern appeals of any final decision of the USEPA under 40 CFR Parts 72, 73, 74, 75, 76, and 77; provided that matters listed in paragraph (d) of 40 CFR 78.3 and preliminary, procedural, or intermediate decisions, such as draft acid rain permits, may not be appealed.

(F) Filing an appeal, and exhausting administrative remedies, under 40 CFR Part 78 shall be a prerequisite to seeking judicial review. Final USEPA action occurs only when a decision appealable under 40 CFR Part 78 is issued and the procedures for appealing the decision are exhausted.

Effective: 11/10/2011

R.C. 119.032 review dates: 08/24/2011 and 08/24/2016

CERTIFIED ELECTRONICALLY
Certification

10/31/2011
Date

Promulgated Under: 119.03
Statutory Authority: 3704.03(E)
Rule Amplifies: 3704.03(A), 3704.03(E)
Prior Effective Dates: 9/10/97, 6/27/02, 1/12/07

3745-103-09 **Acid rain compliance plan and compliance options.**

(A) The compliance plan may include a NO_x averaging plan under rule 3745-103-63 of the Administrative Code; and

(1) A plan for a compliance option that includes units at more than one affected source shall be complete only if:

(a) Such plan is signed and certified by the designated representative for each source with an affected unit governed by such plan; and

(b) A complete permit application is submitted covering each unit governed by such plan.

(2) The director's approval of a plan under paragraph (A)(1) of this rule that includes units in more than one state shall be final only after every permitting authority with jurisdiction over any such unit has approved the plan with the same modifications or conditions, if any.

(B) Conditional approval. In the compliance plan, the designated representative of an affected unit may propose, in accordance with rule 3745-103-09 of the Administrative Code, any acid rain compliance option for conditional approval; provided that an acid rain compliance option under rules 3745-103-55 to 3745-103-66 of the Administrative Code may be conditionally proposed only to the extent provided in rules 3745-103-55 to 3745-103-66 of the Administrative Code.

(1) To activate a conditionally approved acid rain compliance option, the designated representative shall notify the director in writing that the conditionally approved compliance option will actually be pursued beginning January first of a specified year. Such notification shall be subject to the limitations on activation under rules 3745-103-55 to 3745-103-66 of the Administrative Code. If the conditionally approved compliance option includes a plan described in paragraph (A)(1) of this rule, the designated representative of each source governed by the plan shall sign and certify the notification.

(2) The notification under paragraph (B)(1) of this rule shall specify the first calendar year and the last calendar year for which the conditionally approved acid rain compliance option is to be activated. A conditionally approved compliance option shall be activated, if at all, before the date of any enforceable milestone applicable to the compliance option. The date of activation of the compliance option shall not be a defense against failure to meet the requirements applicable to that compliance option during each calendar year for which the compliance option is activated.

(3) Upon submission of a notification meeting the requirements of paragraphs (B)(1) and (B)(2) of this rule, the conditionally approved acid rain compliance option becomes binding on the owners and operators and the designated representative of any unit governed by the conditionally approved compliance option.

(4) A notification meeting the requirements of paragraphs (B)(1) and (B)(2) of this rule will revise the unit's permit in accordance with rule 3745-103-18 of the Administrative Code.

(C) Termination of compliance option.

(1) The designated representative for a unit may terminate an acid rain compliance option by notifying the director in writing that an approved compliance option will be terminated beginning January first of a specified year. Such notification shall be subject to the limitations on termination under rules 3745-103-55 to 3745-103-66 of the Administrative Code. If the compliance option includes a plan described in paragraph (A)(1) of this rule, the designated representative for each source governed by the plan shall sign and certify the notification.

(2) The notification under paragraph (C)(1) of this rule shall specify the calendar year for which the termination will take effect.

(3) Upon submission of a notification meeting the requirements of paragraphs (C)(1) and (C)(2) of this rule, the termination becomes binding on the owners and operators and the designated representative of any unit governed by the acid rain compliance option to be terminated.

(4) A notification meeting the requirements of paragraphs (C)(1) and (C)(2) of this rule will revise the unit's permit in accordance with rule 3745-103-18 of the Administrative Code.

R.C. 119.032 review dates: 08/24/2011 and 08/24/2016

CERTIFIED ELECTRONICALLY
Certification

08/24/2011
Date

Promulgated Under: 119.03
Statutory Authority: 3704.03(E)
Rule Amplifies: 3704.03(A), 3704.03(E)
Prior Effective Dates: 9/10/97, 6/27/02, 1/12/07

Rule 3745-103-10 has been rescinded as of January 12, 2007

3745-103-11 **Acid rain permit.**

(A) Contents.

Each acid rain permit, including any draft or proposed acid rain permit, will contain the following elements:

(1) All elements required for a complete acid rain permit application under rule 3745-103-07 of the Administrative Code, as approved or adjusted by the director;

(2) The applicable acid rain emissions limitation for sulfur dioxide; and

(3) The applicable acid rain emissions limitation for nitrogen oxides.

(B) Each acid rain permit is deemed to incorporate the definitions of terms under rule 3745-103-01 of the Administrative Code.

R.C. 119.032 review dates: 08/24/2011 and 08/24/2016

CERTIFIED ELECTRONICALLY
Certification

08/24/2011
Date

Promulgated Under: 119.03
Statutory Authority: 3704.03(E)
Rule Amplifies: 3704.03(A), 3704.03(E)
Prior Effective Dates: 9/10/97, 1/12/07

3745-103-12 **Permit shield.**

[Comment: For dates of non-regulatory government publications, publications of recognized organizations and associations, federal rules, and federal statutory provisions referenced in this rule, see paragraph (C) of rule 3745-103-01 of the Administrative Code titled "Referenced materials."]

Each affected unit operated in accordance with the acid rain permit that governs the unit and that was issued in conjunction with Title IV of the Clean Air Act, as provided in rules 3745-103-01 to 3745-103-21 of the Administrative Code, and 40 CFR Parts 72, 73, 74, 75, 76, 77, and 78, shall be deemed to be operating in compliance with the acid rain program, except as provided in paragraph (G)(6) of rule 3745-103-05 of the Administrative Code.

Effective: 11/10/2011

R.C. 119.032 review dates: 08/24/2011 and 08/24/2016

CERTIFIED ELECTRONICALLY
Certification

10/31/2011
Date

Promulgated Under: 119.03
Statutory Authority: 3704.03(E)
Rule Amplifies: 3704.03(A), 3704.03(E)
Prior Effective Dates: 9/10/97, 6/27/02, 1/12/07

3745-103-13 **Issuance of acid rain permits.**

[Comment: For dates of non-regulatory government publications, publications of recognized organizations and associations, federal rules, and federal statutory provisions referenced in this rule, see paragraph (C) of rule 3745-103-01 of the Administrative Code titled "Referenced materials."]

(A) State permit issuance.

(1) The Ohio EPA shall be responsible for administering and enforcing acid rain permits effective in phase II for all affected sources:

(a) That are located in the geographic area covered by the operating permits program; and

(b) To the extent that the accepted state acid rain program is applicable.

(2) In administering and enforcing acid rain permits, the Ohio EPA shall comply with the procedures for issuance, revision, renewal, and appeal of acid rain permits under this rule and rules 3745-103-14 to 3745-103-20 of the Administrative Code.

(B) Permit issuance deadline.

(1) The Ohio EPA, to the extent that it is responsible under paragraph (A) of this rule as of December 31, 1997 (or such later date as the USEPA may establish) for administering and enforcing acid rain permits, shall:

(a) On or before December 31, 1997, issue an acid rain permit for phase II covering the affected units (other than opt-in sources) at each source in the geographic area for which the program is approved; provided that the designated representative of the source submitted a timely and complete acid rain permit application in accordance with rule 3745-103-06 of the Administrative Code.

(b) On or before January 1, 1999, for each unit subject to an acid rain NO_x emission limitation, amend the acid rain permit under rule 3745-103-18 of the Administrative Code and add any NO_x early election plan that was approved by the USEPA under rule 3745-103-60 of the Administrative Code and has not been terminated and reopen the acid rain permit and add any other acid rain program nitrogen oxides requirements; provided that the designated representative of the affected source submitted a timely and complete acid rain permit application for nitrogen oxides in accordance with rule 3745-103-06 of the Administrative Code.

(2) Each acid rain permit issued in accordance with this rule shall have a term of five years commencing on the effective date; provided that, at the discretion of the Ohio EPA, an acid rain permit for phase II issued to a source may have a term of less than five years where necessary to coordinate the term of such permit with the term of an operating permit to be issued to the source under a state operating permit program. Each acid rain permit issued in accordance with paragraph (B)(1) of this rule shall take effect by the later of January 1, 2000, or, where the permit governs a unit under paragraph (A)(3) of rule 3745-103-02 of the Administrative Code, the deadline for monitor certification under 40 CFR Part 75.

Effective: 11/10/2011

R.C. 119.032 review dates: 08/24/2011 and 08/24/2016

CERTIFIED ELECTRONICALLY
Certification

10/31/2011
Date

Promulgated Under: 119.03
Statutory Authority: 3704.03(E)
Rule Amplifies: 3704.03(A), 3704.03(E)
Prior Effective Dates: 9/10/97, 6/27/02, 1/12/07

3745-103-14 **Acid rain permit appeal procedures.**

[Comment: For dates of non-regulatory government publications, publications of recognized organizations and associations, federal rules, and federal statutory provisions referenced in this rule, see paragraph (C) of rule 3745-103-01 of the Administrative Code titled "Referenced materials."]

(A) The USEPA may intervene as a matter of right in any administrative appeal of an acid rain permit or denial of an acid rain permit.

(B) No administrative appeal concerning an acid rain requirement shall result in a stay of the following requirements:

(1) The allowance allocations for any year during which the appeal proceeding is pending or is being conducted;

(2) Any standard requirement under rule 3745-103-05 of the Administrative Code;

(3) The emissions monitoring and reporting requirements applicable to the affected units at an affected source under 40 CFR Part 75;

(4) Uncontested provisions of the decision on appeal; and

(5) The terms of a certificate of representation submitted by a designated representative under 40 CFR Part 72, Subpart B.

Effective: 11/10/2011

R.C. 119.032 review dates: 08/24/2011 and 08/24/2016

CERTIFIED ELECTRONICALLY
Certification

10/31/2011
Date

Promulgated Under: 119.03
Statutory Authority: 3704.03(E)
Rule Amplifies: 3704.03(A), 3704.03(E)
Prior Effective Dates: 9/10/97, 1/12/07

3745-103-15 **Permit revisions.**

[Comment: For dates of non-regulatory government publications, publications of recognized organizations and associations, federal rules, and federal statutory provisions referenced in this rule, see paragraph (C) of rule 3745-103-01 of the Administrative Code titled "Referenced materials."]

(A) This rule shall govern revisions to any acid rain permit issued by the director and the acid rain portion of any operating permit issued by the director.

(B) Notwithstanding the operating permit revision procedures specified in 40 CFR Parts 70 and 71 and rule 3745-77-08 of the Administrative Code, the provisions of this rule and rules 3745-103-14 and 3745-103-16 to 3745-103-20 of the Administrative Code shall govern revision of any acid rain program permit provision.

(C) The terms of the existing acid rain permit shall apply while the permit revision is pending, except as provided in rule 3745-103-18 of the Administrative Code for administrative permit amendments.

(D) The standard requirements of rule 3745-103-05 of the Administrative Code shall not be modified or voided by a permit revision.

(E) Any permit revision involving incorporation of a compliance option that was not submitted for approval and comment during the permit issuance process, or involving a change in a compliance option that was previously submitted, shall meet the requirements for applying for such compliance option under rules 3745-103-22 to 3745-103-66 of the Administrative Code.

(F) Any designated representative who fails to submit any relevant information or who has submitted incorrect information in a permit revision shall, upon becoming aware of such failure or incorrect submittal, promptly submit such supplementary information or corrected information to the director.

Effective: 11/10/2011

R.C. 119.032 review dates: 08/24/2011 and 08/24/2016

CERTIFIED ELECTRONICALLY
Certification

10/31/2011
Date

Promulgated Under: 119.03
Statutory Authority: 3704.03(E)
Rule Amplifies: 3704.03(A), 3704.03(E)
Prior Effective Dates: 9/10/97, 6/27/02, 1/12/07

3745-103-16 **Permit modifications.**

(A) Permit modifications shall:

(1) Follow the permit issuance requirements of rule 3745-103-13 of the Administrative Code and the Ohio EPA's permit regulations adopted under rule 3745-77-07 of the Administrative Code; and

(2) For purposes of applying paragraph (A)(1) of this rule, be treated as acid rain permit applications, to the extent consistent with paragraphs (B) and (C) of rule 3745-103-15 of the Administrative Code.

(B) The following permit revisions are permit modifications:

(1) Relaxation of an excess emission offset requirement after approval of the offset plan by the USEPA;

(2) Incorporation of a final nitrogen oxides alternative emission limitation following a demonstration period;

(3) At the option of the designated representative submitting the permit revision, the permit revisions listed in paragraph (B) of rule 3745-103-17 of the Administrative Code; and

(4) Changes in a thermal energy plan that result in any addition or subtraction of a replacement unit or any change affecting the number of allowances transferred for the replacement of thermal energy.

Effective: 11/10/2011

R.C. 119.032 review dates: 08/24/2011 and 08/24/2016

CERTIFIED ELECTRONICALLY
Certification

10/31/2011
Date

Promulgated Under: 119.03
Statutory Authority: 3704.03(E)
Rule Amplifies: 3704.03(A), 3704.03(E)
Prior Effective Dates: 9/10/97, 6/27/02, 1/12/07

3745-103-17 **Fast-track modifications.**

(A) Fast-track modifications shall follow the following procedures:

(1) The designated representative shall serve a copy of the fast-track modification on the USEPA, the director, and any person entitled to a written notice of a draft permit under the Ohio EPA's permit regulations adopted under rule 3745-77-08 of the Administrative Code. Within five business days of serving such copies, the designated representative shall also give public notice by publication in a newspaper of general circulation in the area where the source is located or in a state publication designed to give general public notice.

(2) The public shall have a period of thirty days, commencing on the date of publication of the notice, to comment on the fast-track modification. Comments shall be submitted in writing to the director and to the designated representative.

(3) The designated representative shall submit the fast-track modification to the director on or before commencement of the public comment period.

(4) Within ninety days of the close of the public comment period, the Ohio EPA shall consider the fast-track modification and the comments received and approve, in whole or in part or with changes or conditions as appropriate, or disapprove the modification. A fast-track modification shall be subject to the same provisions for review by the USEPA and the director as are applicable to a permit modification under rule 3745-103-16 of the Administrative Code.

(B) The following permit revisions are, at the option of the designated representative submitting the permit revision, either fast-track modifications under this rule or permit modifications under rule 3745-103-16 of the Administrative Code:

(1) Incorporation of a compliance option that the designated representative did not submit for approval and comment during the permit issuance process;

(2) Addition of a nitrogen oxides averaging plan to a permit; and

(3) Changes in a repowering plan, nitrogen oxides averaging plan, or nitrogen oxides compliance deadline extension.

R.C. 119.032 review dates: 08/24/2011 and 08/24/2016

CERTIFIED ELECTRONICALLY
Certification

08/24/2011
Date

Promulgated Under: 119.03
Statutory Authority: 3704.03(E)
Rule Amplifies: 3704.03(A), 3704.03(E)
Prior Effective Dates: 9/10/97, 6/27/02, 1/12/07

3745-103-18 **Administrative permit amendment.**

[Comment: For dates of non-regulatory government publications, publications of recognized organizations and associations, federal rules, and federal statutory provisions referenced in this rule, see paragraph_(C) of rule 3745-103-01 of the Administrative Code titled "Referenced materials."]

(A) Administrative amendments shall follow the procedures set forth under paragraph (B) of rule 3745-77-08 of the Administrative Code. The director will submit the revised portion of the permit to the USEPA within ten working days after the date of final action on the request for an administrative amendment.

(B) The following permit revisions are administrative amendments:

(1) Activation of a compliance option conditionally approved by the director; provided that all requirements for activation under paragraph (B) of rule 3745-103-09 of the Administrative Code are met;

(2) Changes in the designated representative or alternative designated representative; provided that a new certificate of representation is submitted to the USEPA and the director in accordance with 40 CFR Part 72, Subpart B;

(3) Correction of typographical errors;

(4) Changes in names, addresses, or telephone or facsimile numbers;

(5) Changes in the owners or operators; provided that a new certificate of representation is submitted within thirty days to the USEPA and the director in accordance with 40 CFR Part 72, Subpart B;

(6) Termination of a compliance option in the permit; provided that all requirements for termination under paragraph (C) of rule 3745-103-09 of the Administrative Code shall be met and this procedure shall not be used to terminate a repowering plan after December 31, 1999; for opt-in sources, termination of a compliance option in the permit; provided that all requirements for termination under rule 3745-103-48 of the Administrative Code are met.

(7) Changes in the date, specified in a new unit's acid rain permit, of commencement of operation or the deadline for monitor certification, provided that the changes are in accordance with rule 3745-103-05 of the Administrative Code;

(8) The addition of or change in a nitrogen oxides alternative emissions limitation demonstration period, provided that the requirements of rules 3745-103-55 to 3745-103-66 of the Administrative Code are met;

(9) Adoption of changes that the USEPA has determined to be similar to those in paragraphs (B)(1) to (B)(10) of this rule;

(10) Changes in a thermal energy plan that do not result in the addition or subtraction of a replacement unit or any change affecting the number of allowances transferred for the replacement of thermal energy;

(11) The addition of a NO_x early election plan that was approved by the USEPA under 40 CFR 76.8 and by the director under rule 3745-103-59 of the Administrative Code;

(12) The addition of an exemption for which the requirement have been met under rules 3745-103-03 and 3745-103-04 of the Administrative Code; and

(13) Adoption of changes that the director has determined to be similar to those in paragraphs (B)(1) to (B)(12) of this rule.

(C) Issuance of amendment

(1) The director shall take final action on an administrative permit amendment, or for the addition of an alternative emissions limitation demonstration period. The source may implement any changes in the administrative permit amendment immediately upon submission of the requested amendment, provided that the requirements of paragraph (B) of this rule are met.

(2) The director may, on the director's own motion, make an administrative permit amendment under paragraph (B)(3), (B)(4), (B)(11), or (B)(12) of this rule at least thirty days after providing notice to the designated representative of the amendment and without providing any other prior public comment.

(D) The director shall designate the permit revision under paragraph (B) of this rule as having been made as an administrative permit amendment. The director shall submit the revised portion of the permit to the USEPA.

(E) An administrative amendment shall not be subject to the provisions for review by the USEPA and affected states applicable to a permit modification under rule 3745-103-16 of the Administrative Code and 40 CFR 72.81.

Effective: 11/10/2011

R.C. 119.032 review dates: 08/24/2011 and 08/24/2016

CERTIFIED ELECTRONICALLY
Certification

10/31/2011
Date

Promulgated Under: 119.03
Statutory Authority: 3704.03(E)
Rule Amplifies: 3704.03(A), 3704.03(E)
Prior Effective Dates: 9/10/97, 6/27/02, 1/12/07

3745-103-19 **Automatic permit amendment.**

[Comment: For dates of non-regulatory government publications, publications of recognized organizations and associations, federal rules, and federal statutory provisions referenced in this rule, see paragraph_(C) of rule 3745-103-01 of the Administrative Code titled "Referenced materials."]

The following permit revisions shall be deemed to amend automatically, and become a part of the affected unit's acid rain permit by operation of law without any further review:

(A) Upon recordation by the USEPA under 40 CFR Part 73, all allowance allocations to, transfers to, and deductions from an affected unit's allowance tracking system account; and

(B) Incorporation of an offset plan that has been approved by the USEPA under 40 CFR Part 77.

Effective: 11/10/2011

R.C. 119.032 review dates: 08/24/2011 and 08/24/2016

CERTIFIED ELECTRONICALLY
Certification

10/31/2011
Date

Promulgated Under: 119.03
Statutory Authority: 3704.03(E)
Rule Amplifies: 3704.03(A), 3704.03(E)
Prior Effective Dates: 9/10/97, 1/12/07

3745-103-20 **Permit reopenings.**

[Comment: For dates of non-regulatory government publications, publications of recognized organizations and associations, federal rules, and federal statutory provisions referenced in this rule, see paragraph (C) of rule 3745-103-01 of the Administrative Code titled "Referenced materials."]

(A) The director shall reopen an acid rain permit for cause whenever:

(1) Any additional requirement under the acid rain program becomes applicable to any affected unit governed by the permit;

(2) The director determines that the permit contains a material mistake or that an inaccurate statement was made in establishing the emissions standards or other terms or conditions of the permit, unless the mistake or statement is corrected in accordance with rule 3745-103-18 of the Administrative Code; or

(3) The director determines that the permit must be revised or revoked to assure compliance with acid rain program requirements.

(B) In reopening an acid rain permit for cause, the director will issue a draft permit changing the provisions, or adding the requirements, for which the reopening was necessary. The draft permit shall be subject to the requirements of rules 3745-103-11 and 3745-103-13 of the Administrative Code.

(C) As provided in paragraph (B)(1) of rule 3745-103-13 of the Administrative Code and paragraph (c)(2) of 40 CFR 72.74, the director shall reopen an acid rain permit to incorporate nitrogen oxides requirements, consistent with rules 3745-103-55 to 3745-103-66 of the Administrative Code.

Effective: 11/10/2011

R.C. 119.032 review dates: 08/24/2011 and 08/24/2016

CERTIFIED ELECTRONICALLY
Certification

10/31/2011
Date

Promulgated Under: 119.03
Statutory Authority: 3704.03(E)
Rule Amplifies: 3704.03(A), 3704.03(E)
Prior Effective Dates: 9/10/97, 6/27/02, 1/12/07

3745-103-21 **Units with repowering extension plans.**

[Comment: For dates of non-regulatory government publications, publications of recognized organizations and associations, federal rules, and federal statutory provisions referenced in this rule, see paragraph (C) of rule 3745-103-01 of the Administrative Code titled "Referenced materials."]

(A) Removal from operation to repower. The designated representative of a unit governed by an approved repowering plan shall notify the USEPA and the Ohio EPA in writing at least sixty days in advance of the date on which the existing unit is to be removed from operation so that the qualified repowering technology can be installed, or is to be replaced by another unit with the qualified repowering technology, in accordance with the plan.

(B) Commencement of operation. Not later than sixty days after the units repowered under an approved repowering plan commences operation at full load, the designated representative of the unit shall submit a report to the USEPA and the Ohio EPA comparing the actual hourly emissions and per cent removal of each pollutant controlled at the unit to the actual hourly emissions and per cent removal at the existing unit under the plan prior to repowering, determined in accordance with 40 CFR Part 75.

(C) Decision to terminate. If at any time before the end of the repowering extension and before completion of construction and start-up testing, the owners and operators decide to terminate good faith efforts to design, construct, and test the qualified repowering technology on the unit to be repowered under an approved repowering plan, then the designated representative shall submit a notice to the USEPA and the Ohio EPA by the earlier of the end of the repowering extension or a date within thirty days of such decision, stating the date on which the decision was made.

Effective: 11/10/2011

R.C. 119.032 review dates: 08/24/2011 and 08/24/2016

CERTIFIED ELECTRONICALLY
Certification

10/31/2011
Date

Promulgated Under: 119.03
Statutory Authority: 3704.03(E)
Rule Amplifies: 3704.03(A), 3704.03(E)
Prior Effective Dates: 9/10/97, 1/12/07

3745-103-22 **Opt-in purpose and scope.**

[Comment: For dates of non-regulatory government publications, publications of recognized organizations and associations, federal rules, and federal statutory provisions referenced in this rule, see paragraph (C) of rule 3745-103-01 of the Administrative Code titled "Referenced materials."]

The purpose of rules 3745-103-22 to 3745-103-54 of the Administrative Code is to establish the requirements and procedures for:

(A) The election of a combustion or process source that emits sulfur dioxide to become an affected unit under the acid rain program, pursuant to section 410 of the Clean Air Act; and

(B) Issuing and modifying operating permits; certifying monitors; and allocating, tracking, transferring, surrendering and deducting allowances for combustion or process sources electing to become affected units.

Effective: 11/10/2011

R.C. 119.032 review dates: 08/24/2011 and 08/24/2016

CERTIFIED ELECTRONICALLY
Certification

10/31/2011
Date

Promulgated Under: 119.03
Statutory Authority: 3704.03(E)
Rule Amplifies: 3704.03(A), 3704.03(E)
Prior Effective Dates: 9/10/97, 6/27/02, 1/12/07

3745-103-23 **Opt-in applicability.**

Combustion or process sources that are not affected units under rule 3745-103-02 of the Administrative Code and that operate and are located in the state of Ohio may submit an opt-in permit application to become opt-in sources upon issuance of an opt-in permit. Units for which an exemption under rule 3745-103-03 or 3745-103-04 of the Administrative Code is in effect and combustion or process sources that are not operating are not eligible to submit an opt-in permit application to become opt-in sources.

R.C. 119.032 review dates: 08/24/2011 and 08/24/2016

CERTIFIED ELECTRONICALLY
Certification

08/24/2011
Date

Promulgated Under: 119.03
Statutory Authority: 3704.03(E)
Rule Amplifies: 3704.03(A), 3704.03(E)
Prior Effective Dates: 9/10/97, 6/27/02, 1/12/07

3745-103-24 **Opt-in relationship to the acid rain program requirements.**

[Comment: For dates of non-regulatory government publications, publications of recognized organizations and associations, federal rules, and federal statutory provisions referenced in this rule, see paragraph (C) of rule 3745-103-01 of the Administrative Code titled "Referenced materials."]

(A) General.

(1) For purposes of applying 40 CFR Parts 72, 73, 75, 77 and 78, each opt-in source shall be treated as an affected unit.

(2) 40 CFR Part 72 Subparts A, B, G, and H, and rules 3745-103-01, 3745-103-02, 3745-103-03, 3745-103-04, and 3745-103-05 of the Administrative Code, shall apply to this rule.

(B) Permits. The director shall act in accordance with this rule and rules 3745-77-08 and 3745-103-13 of the Administrative Code, and 40 CFR Part 71 in issuing or denying an opt-in permit and incorporating it into a combustion or process source's operating permit. To the extent that any requirement of this rule, 40 CFR Part 72, 40 CFR Part 78, and rule 3745-103-13 of the Administrative Code, are inconsistent with the requirements of rule 3745-77-08 of the Administrative Code, 40 CFR Part 71, the requirements of this rule, 40 CFR Part 72, 40 CFR Part 78, rule 3745-103-13 of the Administrative Code, and section 3745.04 of the Revised Code, shall take precedence and shall govern the issuance, denials, revision, reopening, renewal, and appeal of the opt-in permit.

(C) Appeals.

(1) The procedures for appeals of decisions of the director under this rule are contained in section 3745.04 of the Revised Code.

(2) The procedures for appeals of decisions of the USEPA under this rule are contained in 40 CFR Part 78.

(D) Allowances. A combustion or process source that becomes an affected unit under this rule shall be subject to all the requirements of 40 CFR Part 73, Subparts C and D, consistent with rules 3745-103-41 to 3745-103-51 of the Administrative Code.

(E) Excess emissions. A combustion or process source that becomes an affected unit under this rule shall be subject to the requirements of 40 CFR Part 77 applicable to excess emissions of sulfur dioxide and shall not be subject to the requirements of 40 CFR Part 77 applicable to excess emissions of nitrogen oxides.

(F) Monitoring. A combustion or process source that becomes an affected unit under this rule shall be subject to all the requirements of 40 CFR Part 75, consistent with rules 3745-103-52 and 3745-103-53 of the Administrative Code.

Effective: 11/10/2011

R.C. 119.032 review dates: 08/24/2011 and 08/24/2016

CERTIFIED ELECTRONICALLY
Certification

10/31/2011
Date

Promulgated Under: 119.03
Statutory Authority: 3704.03(E)
Rule Amplifies: 3704.03(A), 3704.03(E)
Prior Effective Dates: 9/10/97, 6/27/02, 1/12/07

3745-103-25 **Opt-in designated representative.**

(A) The provisions of rule 3745-103-06 of the Administrative Code shall apply to the designated representative of an opt-in source.

(B) If a combustion or process source is located at the same facility as one or more affected units, the combustion or process source shall have the same designated representative as the other affected units at the facility.

Effective: 11/10/2011

R.C. 119.032 review dates: 08/24/2011 and 08/24/2016

CERTIFIED ELECTRONICALLY
Certification

10/31/2011
Date

Promulgated Under: 119.03
Statutory Authority: 3704.03(E)
Rule Amplifies: 3704.03(A), 3704.03(E)
Prior Effective Dates: 9/10/97, 6/27/02, 1/12/07

3745-103-26 **Roles - USEPA and director.**

(A) USEPA responsibilities. The USEPA shall be responsible for the following activities under the opt-in provisions of the acid rain program:

(1) Calculating the baseline or alternative baseline and allowance allocation, and allocating allowances for combustion or process sources that become affected units under this rule;

(2) Certifying or recertifying monitoring systems for combustion or process sources as provided under rules 3745-103-52 to 3745-103-54 of the Administrative Code;

(3) Establishing allowance accounts, tracking allowances, assessing end-of-year compliance, determining reduced utilization, approving thermal energy transfer and accounting for the replacement of thermal energy, closing accounts for opt-in sources that shut down, are reconstructed, become affected under rule 3745-103-02 of the Administrative Code, or fail to renew their opt-in permit, and deducting allowances as provided under rules 3745-103-41 to 3745-103-51 of the Administrative Code; and

(4) Ensuring that the opt-in source meets all withdrawal conditions prior to withdrawal from the acid rain program as provided in rule 3745-103-31 of the Administrative Code; and

(5) Approving and disapproving the request to withdraw from the acid rain program.

(B) Director responsibilities. The director shall be responsible for the following activities:

(1) Issuing the draft and final opt-in permit;

(2) Revising and renewing the opt-in permit; and

(3) Terminating the opt-in permit for an opt-in source as provided in rules 3745-103-31, 3745-103-47, and 3745-103-51 of the Administrative Code.

R.C. 119.032 review dates: 08/24/2011 and 08/24/2016

CERTIFIED ELECTRONICALLY
Certification

08/24/2011
Date

Promulgated Under: 119.03
Statutory Authority: 3704.03(E)
Rule Amplifies: 3704.03(A), 3704.03(E)
Prior Effective Dates: 9/10/97, 1/12/07

3745-103-27 **Opt-in permit contents.**

[Comment: For dates of non-regulatory government publications, publications of recognized organizations and associations, federal rules, and federal statutory provisions referenced in this rule, see paragraph (C) of rule 3745-103-01 of the Administrative Code titled "Referenced materials."]

(A) The opt-in permit shall be included in the acid rain permit.

(B) Scope. The opt-in permit provisions shall apply only to the opt-in source and not to any other affected units.

(C) Contents. Each opt-in permit, including any draft or proposed opt-in permit, shall contain the following elements in a format specified by the USEPA:

(1) All elements required for a complete opt-in permit application as provided in rule 3745-103-29 of the Administrative Code for combustion sources or in rule 3745-103-30 of the Administrative Code for process sources or, if applicable, all elements required for a complete opt-in permit renewal application as provided in rule 3745-103-32 of the Administrative Code for combustion sources or rule 3745-103-30 of the Administrative Code for process sources;

(2) The allowance allocation for the opt-in source as determined by the USEPA under rules 3745-103-33 to 3745-103-39 of the Administrative Code for combustion sources or under rules 3745-103-40 to 3745-103-51 of the Administrative Code for process sources;

(3) The standard permit requirements as provided under rule 3745-103-05 of the Administrative Code, except that the provisions in paragraph (D) of rule 3745-103-05 of the Administrative Code shall not be included in the opt-in permit; and

(4) Termination. The provision that participation of a combustion or process source in the acid rain program may be terminated only in accordance with rules 3745-103-31, 3745-103-47, and 3745-103-51 of the Administrative Code.

(D) Each opt-in permit is deemed to incorporate the definitions of terms under rule 3745-103-01 of the Administrative Code.

(E) Permit shield. Each opt-in source operated in accordance with the opt-in permit that governs the opt-in source and that was issued in compliance with Title IV of the Clean Air Act, as provided in 40 CFR Parts 72, 73, 74, 75, 77, and 78, shall be deemed to be operating in compliance with the acid rain program, except as provided in paragraph (G)(6) of rule 3745-103-05 of the Administrative Code.

(F) Term of opt-in permit. An opt-in permit shall be issued for a period of five years and may be renewed in accordance with rule 3745-103-32 of the Administrative Code; provided:

(1) If an opt-in permit is issued prior to January 1, 2000, then the opt-in permit may, at the option of the director expire on December 31, 1999; and

(2) If an affected unit with an acid rain permit is located at the same source as the combustion source, the combustion source's opt-in permit may, at the option of the director, expire on the same date as the affected unit's acid rain permit expires.

Effective: 11/10/2011

R.C. 119.032 review dates: 08/24/2011 and 08/24/2016

CERTIFIED ELECTRONICALLY
Certification

10/31/2011
Date

Promulgated Under: 119.03
Statutory Authority: 3704.03(E)
Rule Amplifies: 3704.03(A), 3704.03(E)
Prior Effective Dates: 9/10/97, 6/27/02, 1/12/07

3745-103-28 **Opt-in permit process.**

[Comment: For dates of non-regulatory government publications, publications of recognized organizations and associations, federal rules, and federal statutory provisions referenced in this rule, see paragraph (C) of rule 3745-103-01 of the Administrative Code titled "Referenced materials."]

(A) Submission. The designated representative of a combustion or process source may submit an opt-in permit application and a monitoring plan to the director and a copy to the USEPA at any time for any combustion or process source that is operating.

(B) Issuance or denial of opt-in permits. The director shall issue or deny opt-in permits or revisions of opt-in permits in accordance with the procedures in rule 3745-77-02 of the Administrative Code, 40 CFR Part 71, and 40 CFR Part 72, Subparts F and G, except as provided in this rule.

(1) Supplemental information. Regardless of whether the opt-in permit application is complete, the USEPA or the director may request submission of any additional information that the USEPA or the director determines to be necessary in order to review the opt-in permit application or to issue an opt-in permit.

(2) Interim review of monitoring plan. The USEPA will determine, on an interim basis, the sufficiency of the monitoring plan, accompanying the opt-in permit application. A monitoring plan is sufficient, for purposes of interim review, if the plan appears to contain information demonstrating that all SO_2 emissions, NO_X emissions, CO_2 emissions, and opacity of the combustion or process source are monitored and reported in accordance with 40 CFR Part 75. This interim review of sufficiency shall not be construed as the approval or disapproval of the combustion or process source's monitoring system.

(3) Issuance of draft opt-in permit. After the USEPA determines whether the combustion or process source's monitoring plan is sufficient under paragraph (B) of this rule, the director shall serve the draft opt-in permit or the denial of a draft permit or the draft opt-in permit revisions or the denial of draft opt-in permit revisions on the designated representative of the combustion or process source submitting an opt-in permit application. A draft permit or draft opt-in permit revision shall not be served or issued if the monitoring plan is determined not to be sufficient.

(4) Confirmation by source of intention to opt-in. Within twenty-one calendar days from the date of service of the draft opt-in permit or the denial of the draft opt-in permit, the designated representative of a combustion or process source submitting an opt-in permit application must submit to the USEPA and the director, in writing, a confirmation or recision of the source's intention to become an opt-in source under this rule. The USEPA shall treat the failure to

make a timely submission as a recision of the source's intention to become an opt-in source and as a withdrawal of the opt-in permit application.

(5) Issuance of draft opt-in permit. If the designated representative confirms the combustion or process source's intention to opt in under paragraph (B) of this rule, the director will give notice of the draft opt-in permit or denial of the draft opt-in permit and an opportunity for public comment, as provided in accordance with rule 3745-77-08 of the Administrative Code with regard to a draft permit or the denial of a draft permit.

(6) Permit decision deadlines. The director will issue or deny an opt-in permit within eighteen months of receipt of a complete opt-in permit application or such lesser time approved for operating permits under rule 3745-77-08 of the Administrative Code.

(7) Withdrawal of opt-in permit application. A combustion or process source may withdraw its opt-in permit application at any time prior to the issuance of the final opt-in permit. Once a combustion or process source withdraws its application, in order to re-apply, the designated representative must submit a new opt-in permit application in accordance with rule 3745-103-29 of the Administrative Code for combustion sources or rule 3745-103-30 of the Administrative Code for process sources.

(C) (Reserved)

(D) Entry into the acid rain program.

(1) Effective date. The effective date of the opt-in permit shall be either January first, April first, July first, or October first for a combustion or process source providing monthly data under rule 3745-103-33 of the Administrative Code, or January first for a combustion or process source providing annual data under rule 3745-103-33 of the Administrative Code, following the later of the issuance of the opt-in permit by the director or the completion of monitoring system certification, as provided in rules 3745-103-52 and 3745-103-53 of the Administrative Code for combustion sources or rule 3745-103-54 of the Administrative Code for process sources. The combustion or process source shall become an opt-in source and an affected unit as of the effective date of the opt-in permit.

(2) Allowance allocation. After the opt-in permit becomes effective, the USEPA will allocate allowances to the opt-in source as provided in rule 3745-103-41 of the Administrative Code. If the effective date of the opt-in permit is not January first, allowances for the first year shall be prorated as provided in rule 3745-103-39 of the Administrative Code.

(E) Expiration of opt-in permit. An opt-in permit that is issued before the completion of monitoring system certification under rules 3745-103-52 and 3745-103-53 of the Administrative Code for combustion sources or under rule 3745-103-54 of the Administrative Code for process sources shall expire one hundred eighty days after the director serves the opt-in permit on the designated representative of the combustion or process source governed by the opt-in permit, unless such monitoring system certification is complete. The designated representative may petition the USEPA and the director to extend this time period in which an opt-in permit expires and must explain in the petition why such an extension should be granted. The designated representative of a combustion source governed by an expired opt-in permit that seeks to become an opt-in source must submit a new opt-in permit application.

Effective: 11/10/2011

R.C. 119.032 review dates: 08/24/2011 and 08/24/2016

CERTIFIED ELECTRONICALLY
Certification

10/31/2011
Date

Promulgated Under: 119.03
Statutory Authority: 3704.03(E)
Rule Amplifies: 3704.03(A), 3704.03(E)
Prior Effective Dates: 9/10/97, 6/27/02, 1/12/07

3745-103-29 **Opt-in application requirements for combustion sources.**

(A) Opt-in permit application. Each complete opt-in permit application for a combustion source shall contain the following elements in a format prescribed by the USEPA:

(1) Identification of the combustion source, including company name, plant name, plant site address, mailing address, description of the combustion source, and information and diagrams on the combustion source's configuration;

(2) Identification of the designated representative, including name, address, telephone number, and facsimile number;

(3) The year and month the combustion source commenced operation;

(4) The number of hours the combustion source operated in the six months preceding the opt-in permit application and supporting documentation;

(5) The baseline or alternative baseline data under rule 3745-103-33 of the Administrative Code;

(6) The actual SO_2 emissions rate under rule 3745-103-34 of the Administrative Code;

(7) The allowable 1985 SO_2 emissions rate under rule 3745-103-35 of the Administrative Code;

(8) The current allowable SO_2 emissions rate under rule 3745-103-36 of the Administrative Code;

(9) The current promulgated SO_2 emissions rate under rule 3745-103-37 of the Administrative Code;

(10) If the combustion source seeks to qualify for a transfer of allowances from the replacement of thermal energy, a thermal energy plan as provided in rule 3745-103-48 of the Administrative Code for combustion sources; and

(11) A statement whether the combustion source was previously an affected unit under this rule;

(12) A statement that the combustion source is not an affected unit under rule 3745-103-02 of the Administrative Code and does not have an exemption under rule 3745-103-03 or 3745-103-04 of the Administrative Code;

(13) A complete compliance plan for SO_2 under rule 3745-103-09 of the Administrative Code; and

(14) The following statement signed by the designated representative of the combustion source: "I certify that the data submitted under rules 3745-103-33 to 3745-103-39 of the Administrative Code reflects actual operations of the combustion source and has not been adjusted in any way."

(B) Accompanying documents. The designated representative of the combustion source shall submit a monitoring plan in accordance with rule 3745-103-53 of the Administrative Code.

R.C. 119.032 review dates: 08/24/2011 and 08/24/2016

CERTIFIED ELECTRONICALLY
Certification

08/24/2011
Date

Promulgated Under: 119.03
Statutory Authority: 3704.03(E)
Rule Amplifies: 3704.03(A), 3704.03(E)
Prior Effective Dates: 9/10/97, 6/27/02, 1/12/07

3745-103-30 **Application requirements for process sources.**

[Reserved].

Effective: 01/12/2007

R.C. 119.032 review dates: Exempt

CERTIFIED ELECTRONICALLY
Certification

12/29/2006
Date

Promulgated Under: 119.03
Statutory Authority: 3704.03(E)
Rule Amplifies: 3704.03(A), 3704.03(E)
Prior Effective Dates: 9/10/1997

3745-103-31 **Opt-in withdrawal.**

[Comment: For dates of non-regulatory government publications, publications of recognized organizations and associations, federal rules, and federal statutory provisions referenced in this rule, see paragraph (C) of rule 3745-103-01 of the Administrative Code titled "Referenced materials."]

(A) Withdrawal through administrative amendment. An opt-in source may request to withdraw from the acid rain program by submitting an administrative amendment under rule 3745-103-18 of the Administrative Code; provided that the amendment will be treated as received by the director upon issuance of the notification of the acceptance of the request to withdraw under paragraph (F)(1) of this rule.

(B) Requesting withdrawal. To withdraw from the acid rain program, the designated representative of an opt-in source shall submit to the USEPA and the director a request to withdraw effective January first of the year after the year in which the submission is made. The submission shall be made no later than December first of the calendar year preceding the effective date of withdrawal.

(C) Conditions for withdrawal. In order for an opt-in source to withdraw, the following conditions must be met:

(1) By no later than January thirtieth of the first calendar year in which the withdrawal is to be effective, the designated representative must submit to the USEPA an annual compliance certification report pursuant to rule 3745-103-44 of the Administrative Code.

(2) If the opt-in source has excess emissions in the calendar year before the year for which the withdrawal is to be in effect, the designated representative must submit an offset plan for excess emissions, pursuant to 40 CFR Part 77, that provides for immediate deduction of allowances.

(D) USEPA's action on withdrawal. After the opt-in source meets the requirements for withdrawal under paragraphs (B) and (C) of this rule, the USEPA will deduct allowances required to be deducted under 40 CFR 73.35 and 40 CFR Part 77 and allowance equal in number to and with the same or earlier compliance use date as those allocated under rule 3745-103-41 of the Administrative Code for the first year for which the withdrawal is to be effective and all subsequent years.

(E) Opt-in source's prior violations. An opt-in source that withdraws from the acid rain program shall comply with all requirements under the acid rain program concerning all years for which the opt-in source was an affected unit, even if such requirements arise, or must be complied with after the withdrawal takes effect.

(F) Notification.

(1) After the requirements for withdrawal under paragraphs (B) and (C) of this rule are met and after the USEPA's action on withdrawal under paragraph (D) of this rule is complete, the USEPA will issue a notification to the director and the designated representative of the opt-in source of the acceptance of the opt-in source's request to withdraw.

(2) If the requirements for withdrawal under paragraphs (B) and (C) of this rule are not met or the USEPA's action under paragraph (D) of this rule cannot be completed, the USEPA will issue a notification to the director and the designated representative of the opt-in source that the opt-in source's request to withdraw is denied. If the opt-in source's request to withdraw is denied, the opt-in source shall remain in the opt-in program and shall remain subject to the requirements for opt-in sources contained in this rule.

(G) Permit amendment.

(1) After the USEPA issues a notification under paragraph (F)(1) of this rule that the requirements for withdrawal have been met (including the deduction of the full amount of allowances as required under paragraph (D) of this rule), the director shall amend, in accordance with rules 3745-103-15 and 3745-103-18 of the Administrative Code, the opt-in source's acid rain permit to terminate the opt-in permit, not later than sixty days from the issuance of the notification under paragraph (F) of this rule.

(2) The termination of the opt-in permit under paragraph (G)(1) of this rule will be effective of January first of the year for which the withdrawal is requested. An opt-in source shall continue to be an affected unit until the effective date of the termination.

(H) Reapplication upon failure to meet conditions of withdrawal. If the USEPA denies the opt-in source's request to withdraw, the designated representative may submit another request to withdraw in accordance with paragraphs (B) and (C) of this rule.

(I) Ability to return to the acid rain program. Once a combustion or process source withdraws from the acid rain program and its opt-in permit is terminated, a new opt-in permit application for the combustion or process source may not be submitted prior to the date that is four years after the date on which the opt-in permit became effective.

Effective: 11/10/2011

R.C. 119.032 review dates: 08/24/2011 and 08/24/2016

CERTIFIED ELECTRONICALLY
Certification

10/31/2011
Date

Promulgated Under: 119.03
Statutory Authority: 3704.03(E)
Rule Amplifies: 3704.03(A), 3704.03(E)
Prior Effective Dates: 9/10/97, 6/27/02, 1/12/07

3745-103-32 **Revision and renewal of opt-in permit.**

[Comment: For dates of non-regulatory government publications, publications of recognized organizations and associations, federal rules, and federal statutory provisions referenced in this rule, see paragraph_(C) of rule 3745-103-01 of the Administrative Code titled "Referenced materials."]

(A) The designated representative of an opt-in source may submit revisions to its opt-in permit in accordance with rules 3745-103-16 to 3745-103-20 of the Administrative Code.

(B) The designated representative of an opt-in source may renew its opt-in permit by meeting the following requirements:

(1) In order to renew an opt-in permit if the director is the permitting authority for the renewed permit, the designated representative of an opt-in source must submit to the director an opt-in permit application at least eighteen months prior to the expiration of an existing opt-in permit or such shorter time as may be approved for operating permits under rule 3745-77-08 of the Administrative Code.

(2) Each complete opt-in permit application submitted to renew an opt-in permit shall contain the following elements in a format prescribed by the USEPA:

(a) Elements contained in the opt-in source's initial opt-in permit application as specified under paragraphs (A)(1), (A)(2), (A)(10), (A)(12), and (A)(13) of rule 3745-103-29 of the Administrative Code.

(b) An updated monitoring plan, if applicable under 40 CFR 75.53(b).

(C)

(1) Upon receipt of an opt-in permit application submitted to renew an opt-in permit, the director shall issue or deny an opt-in permit in accordance with the requirements under rules 3745-103-26 to 3745-103-32 of the Administrative Code, except as provided in paragraph (C)(2) of this rule.

(2) When issuing a renewed opt-in permit, the director shall not alter an opt-in source's allowance allocation, as established under rule 3745-103-26 to 3745-103-39 of the Administrative Code for combustion sources and under rules 3745-103-26 to 3745-103-32 of the Administrative Code and rule 3745-103-40 of the Administrative Code for process sources, in the opt-in permit that is being renewed.

Effective: 11/10/2011

R.C. 119.032 review dates: 08/24/2011 and 08/24/2016

CERTIFIED ELECTRONICALLY
Certification

10/31/2011
Date

Promulgated Under: 119.03
Statutory Authority: 3704.03(E)
Rule Amplifies: 3704.03(A), 3704.03(E)
Prior Effective Dates: 9/10/97, 1/12/07

3745-103-33 **Opt-in data for baseline and alternative baseline.**

(A) Acceptable data.

(1) The designated representative of a combustion source shall submit either the baseline data specified in this paragraph or alternative baseline data under paragraph (C) of this rule. The designated representative shall also submit the calculations under this rule based on such data.

(2) The following baseline data shall be submitted for the combustion source for the calendar year(s) under paragraph (A)(3) of this rule:

(a) Monthly or annual quantity of each type of fuel consumed, expressed in thousands of tons for coal, thousands of barrels for oil, and million standard cubic feet for natural gas. If other fuels are used, the combustion source must specify units of measure.

(b) Monthly or annual heat content of fuel consumed for each type of fuel consumed, expressed in Btu per pound for coal, Btu per barrel for oil, and Btu per standard cubic foot for natural gas. If other fuels are used, the combustion source must specify units of measure.

(c) Monthly or annual sulfur content of fuel consumed for each type of fuel consumed, expressed as a percentage by weight.

(3) Calendar years.

(a) For combustion sources that commenced operating prior to January 1, 1985, data under this rule shall be submitted for calendar years 1985, 1986, and 1987.

(b) For combustion sources that commenced operation after January 1, 1985, the data under this rule shall be submitted for the first three consecutive calendar years during which the combustion source operated after December 31, 1985.

(B) Calculation of baseline and alternative baseline.

(1) For combustion sources that commenced operation prior to January 1, 1985, the baseline is the average annual quantity of fuel consumed during calendar years 1985, 1986, and 1987, expressed in million British thermal units. The baseline shall be calculated as follows:

$$\text{Baseline} = \frac{\sum_{\text{Year} = 1985}^{1987} \text{Annual Fuel Consumption}}{3}$$

Where,

(a) For a combustion source submitting monthly data,

$$\text{Annual Fuel Consumption} = \sum_{\text{MONTHS} = \text{Jan}}^{\text{Dec}} \sum_{\text{Fuel Types}} \left[\begin{array}{c} \text{Quantity Of Fuel Consumed} \\ \text{x Heat Content x Unit Conversion} \end{array} \right]$$

--

And unit conversion = 2 for coal
= 0.001 for oil
= 1 for gas

For other fuels, the combustion source must specify unit conversion; or

(b) For a combustion source submitting annual data,

--

And unit conversion = 2 for coal
= 0.001 for oil
= 1 for gas

For other fuels, the combustion source must specify unit conversion.

(2) For combustion sources that commenced operation after January 1, 1985, the alternative baseline is the average annual quantity of fuel consumed in the first three consecutive calendar years during which the combustion source operated after December 31, 1985, expressed in MMBtu. The alternative baseline shall be calculated as follows:

$$\text{Alternative Baseline} = \frac{\sum_{\text{First 3 Consecutive Years}} \text{Annual Fuel Consumption}}{3}$$

Where,

"Annual fuel consumption" is as defined under paragraph (B)(1)(a) or (B)(1)(b) of this rule.

(C) Alternative data.

(1) For combustion sources for which any of the data under paragraph (B) of this rule is not available due solely to a natural catastrophe, data as set forth in paragraph (A)(2) of this rule for the first three consecutive calendar years for which data is available after December 31, 1985, may be submitted. The alternative baseline for these combustion sources shall be calculated using the equation for alternative baseline in paragraph (B)(2) of this rule and the definition of annual fuel consumption in paragraph (B)(1)(a) or (B)(1)(b) of this rule.

(2) Except as provided in paragraph (C)(1) of this rule, no alternative data may be submitted. A combustion source that cannot submit all required data, in accordance with this rule, shall not be eligible to submit an opt-in permit application.

(D) USEPA's action. The USEPA may accept in whole or in part or with changes as appropriate, request additional information, or reject data or alternative data submitted for a combustion source's baseline or alternative baseline.

R.C. 119.032 review dates: 08/24/2011 and 08/24/2016

CERTIFIED ELECTRONICALLY
Certification

08/24/2011
Date

Promulgated Under: 119.03
Statutory Authority: 3704.03(E)
Rule Amplifies: 3704.03(A), 3704.03(E)
Prior Effective Dates: 9/10/97, 6/27/02, 1/12/07

3745-103-34 **Actual SO_2 emissions rate.**

[Comment: For dates of non-regulatory government publications, publications of recognized organizations and associations, federal rules, and federal statutory provisions referenced in this rule, see paragraph_(C) of rule 3745-103-01 of the Administrative Code titled "Referenced materials."]

(A) Data requirements. The designated representative of a combustion source shall submit the calculations under this rule based on data submitted under rule 3745-103-33 of the Administrative Code for the following calendar year:

(1) For combustion sources that commenced operation prior to January 1, 1985, the calendar year for calculating the actual SO_2 emissions rate shall be 1985.

(2) For combustion sources that commenced operation after January 1, 1985, the calendar year for calculating the actual SO_2 emissions rate shall be the first year of the three consecutive calendar years of the alternative baseline under paragraph (B)(2) of rule 3745-103-33 of the Administrative Code.

(3) For combustion sources meeting the requirements of paragraph (C) of rule 3745-103-33 of the Administrative Code, the calendar year for calculating the actual SO_2 emissions rate shall be the first year of the three consecutive calendar years to be used as alternative data under paragraph (C) of rule 3745-103-33 of the Administrative Code.

(B) SO_2 emissions factor calculation. The SO_2 emissions factor for each type of fuel consumed during the specified year, expressed in pounds per thousand tons for coal, pounds per thousand barrels for oil and pounds per million cubic feet at standard conditions for gas, shall be calculated as follows:

SO_2 emissions factor = (Average percent of sulfur by weight) x (K), where,

Average per cent of sulfur by weight

= Annual average, for a combustion source submitting annual data

= Monthly average, for a combustion source submitting monthly data

K = 39,000 for bituminous coal or anthracite

= 35,000 for subbituminous coal

= 30,000 for lignite

= 5,964 for distillate (light) oil

= 6,594 for residual (heavy) oil

= 0.6 for natural gas

For other fuels, the combustion source must specify the SO_2 emissions factor.

(C) Annual SO_2 emissions calculation. Annual SO_2 emissions for the specified calendar year, expressed in pounds, shall be calculated as follows:

(1) For a combustion source submitting monthly data,

$$\text{Annual } SO_2 \text{ Emissions} = \sum_{\text{Month = Jan}}^{\text{Dec}} \sum_{\text{Fuel TYPES}} \left[\begin{array}{c} \text{Quantity Of Fuel Consumed} \\ \text{x } SO_2 \text{ Emissions Factor} \\ \text{x (1 - Control System Efficiency)} \\ \text{x (1 - Fuel Pre-Treatment Efficiency)} \end{array} \right]$$

(2) For a combustion source submitting annual data:

$$\text{Annual } SO_2 \text{ Emissions} = \sum_{\text{Fuel Types}} \left[\begin{array}{c} \text{Quantity Of Fuel Consumed} \\ \text{x } SO_2 \text{ Emissions Factor} \\ \text{x (1 - Control System Efficiency)} \\ \text{x (1 - Fuel Pre-Treatment Efficiency)} \end{array} \right]$$

Where,

"Quantity of fuel consumed" is as defined under paragraph (A)(2)(a) of rule 3745-103-33 of the Administrative Code; "SO_2 emissions factor" is as defined under paragraph (B) of this rule; "control system efficiency" is as defined under 40 CFR 60.48a and 40 CFR Part 60, Appendix A, Method 19, if applicable; and "fuel pre-treatment efficiency" is as defined under 40 CFR 60.48a and 40 CFR Part 60, Appendix A, Method 19, if applicable.

(D) Annual fuel consumption calculation. Annual fuel consumption for the specified calendar year, expressed in MMBtu, shall be calculated as defined under paragraph (B)(1) or (B)(2) of rule 3745-103-33 of the Administrative Code.

(E) Actual SO_2 emissions rate calculation. The actual SO_2 emissions rate for the specified calendar year, expressed in pounds per MMBtu, shall be calculated as follows:

$$\text{Actual } SO_2 \text{ Emissions Rate} = \frac{\text{Annual } SO_2 \text{ Emissions}}{\text{Annual Fuel Consumption}}$$

Effective: 11/10/2011

R.C. 119.032 review dates: 08/24/2011 and 08/24/2016

CERTIFIED ELECTRONICALLY
Certification

10/31/2011
Date

Promulgated Under: 119.03

Statutory Authority: 3704.03(E)
Rule Amplifies: 3704.03(A), 3704.03(E)
Prior Effective Dates: 9/10/97, 1/12/07

3745-103-35 **1985 allowable SO_2 emissions rate.**

(A) Data requirements. The designated representative of the combustion source shall submit the following data and the calculations under paragraph (B) of this rule based on the submitted data:

(1) Allowable SO_2 emissions rate of the combustion source expressed in pounds per MMBtu as defined under rule 3745-103-01 of the Administrative Code for the calendar year specified in paragraph (A)(2) of this rule. If the allowable SO_2 emissions rate is not expressed in pounds per MMBtu, the allowable emissions rate shall be converted to pounds per MMBtu by multiplying the emissions rate by the appropriate factor as specified in Table 1 of this rule.

Table 1: Factors to convert emission limits to pounds of SO_2/MMBtu

--

Unit Measurement	Bituminous Coal	Subbituminous Coal	Lignite Coal	Oil
lbs sulfur/MMBtu	2.0	2.0	2.0	2.0
% sulfur in fuel	1.66	2.22	2.86	1.07
PPM SO_2	0.00287	0.00384		0.00167
PPM sulfur in fuel	--	--	--	0.00334
Tons SO_2/hour	2 X 8760 /(annual fuel consumption for specified year[1] * 10^3)			
lbs SO_2/hour	8760 /(annual fuel consumption for specified year[1] * 10^6)			

[1] Annual fuel consumption as defined under paragraph (B)(1) or (B)(2) of rule 3745-103-33 of the Administrative Code or; specified calendar year as defined under paragraph (A)(2) of rule 3745-103-35 of the Administrative Code.

(2) Citation of statute, regulations, and any other authority under which the allowable emissions rate under paragraph (A)(1) of this rule is established as applicable to the combustion source.

(3) Averaging time associated with the allowable emissions rate under paragraph (A)(1) of this rule.

(4) The annualization factor for the combustion source, based on the type of combustion source and the associated averaging time of the allowable emissions rate of the combustion source, as set forth in the Table 2 of this rule:

Table 2: Annualization factors for SO_2 emission rates

--

Type of Combustion Source	Annualization Factor for Scrubbed Unit	Annualization Factor for Unscrubbed Unit

Unit combusting oil, gas, or some combination	1.00	1.00
Coal unit with averaging time < = 1 day	0.93	0.89
Coal unit with averaging time = 1 week	0.97	0.92
Coal unit with averaging time = 30 days	1.00	0.96
Coal unit with averaging time = 90 days	1.00	1.00
Coal unit with averaging time = 1 year	1.00	1.00
Coal unit with federal limit, but averaging time not specified	0.93	0.89

(B) Calendar year.

(1) For combustion sources that commenced operation prior to January 1, 1985, the calendar year for the allowable SO_2 emissions rate shall be 1985.

(2) For combustion sources that commenced operation after January 1, 1985, the calendar year for the allowable SO_2 emissions rate shall be the first year of the three consecutive calendar years of the alternative baseline under paragraph (B)(2) of rule 3745-103-33 of the Administrative Code.

(3) For combustion sources meeting the requirements of paragraph (C) of rule 3745-103-33 of the Administrative Code, the calendar year for calculating the allowable SO_2 emissions rate shall be the first year of the three consecutive calendar years to be used as alternative data under paragraph (C) of rule 3745-103-33 of the Administrative Code.

(C) 1985 allowable SO_2 emissions rate calculation. The allowable SO_2 emissions rate for the specified calendar year shall be calculated as follows:

1985 allowable SO_2 emissions rate = (allowable SO_2 emissions rate) x (annualization factor)

Effective: 11/10/2011

R.C. 119.032 review dates: 08/24/2011 and 08/24/2016

CERTIFIED ELECTRONICALLY
Certification

10/31/2011
Date

Promulgated Under: 119.03
Statutory Authority: 3704.03(E)
Rule Amplifies: 3704.03(A), 3704.03(E)
Prior Effective Dates: 9/10/97, 1/12/07

3745-103-36 **Current allowable SO_2 emissions rate.**

The designated representative shall submit the following data:

(A) Current allowable SO_2 emissions rate of the combustion source, expressed in pounds per MMBtu, which shall be the most stringent federally enforceable emissions limit in effect as of the date of submission of the opt-in application. If the allowable SO_2 emissions rate is not expressed in pounds per MMBtu, the allowable emissions rate shall be converted to pounds per MMBtu by multiplying the allowable rate by the appropriate factor as specified in Table 1 of rule 3745-103-35 of the Administrative Code.

(B) Citations of statute, regulation, and any other authority under which the allowable emissions rate under paragraph (A) of this rule is established as applicable to the combustion source.

(C) Averaging time associated with the allowable emissions rate under paragraph (A) of this rule.

R.C. 119.032 review dates: 08/24/2011 and 08/24/2016

CERTIFIED ELECTRONICALLY
Certification

08/24/2011
Date

Promulgated Under: 119.03
Statutory Authority: 3704.03(E)
Rule Amplifies: 3704.03(A), 3704.03(E)
Prior Effective Dates: 9/10/97, 1/12/07

3745-103-37 **Current promulgated SO_2 emissions limit.**

The designated representative shall submit the following data:

(A) Current promulgated SO_2 emissions limit of the combustion source, expressed in pounds per MMBtu, which shall be the most stringent federally enforceable emissions limit that has been promulgated as of the date of submission of the opt-in permit application and that either is in effect on that date or will take effect after that date. If the promulgated SO_2 emissions limit is not expressed in pounds per MMBtu, the limit shall be converted to pounds per MMBtu by multiplying the limit by the appropriate factor as specified in Table 1 of rule 3745-103-35 of the Administrative Code.

(B) Citations of statute, regulation and any other authority under which the emissions limit under paragraph (A) of this rule is established as applicable to the combustion source.

(C) Averaging time associated with the emissions limit under paragraph (A) of this rule.

(D) Effective date of the emissions limit under paragraph (A) of this rule.

R.C. 119.032 review dates: 08/24/2011 and 08/24/2016

CERTIFIED ELECTRONICALLY
Certification

08/24/2011
Date

Promulgated Under: 119.03
Statutory Authority: 3704.03(E)
Rule Amplifies: 3704.03(A), 3704.03(E)
Prior Effective Dates: 9/10/97, 1/12/07

3745-103-38 **Opt-in allocation formula.**

The USEPA will calculate the annual allowance allocation for a combustion source based on the data, corrected as necessary, under rules 3745-103-33 to 3745-103-37 of the Administrative Code as follows:

(A) For combustion sources for which the current promulgated SO_2 emissions limit under rule 3745-103-37 of the Administrative Code is greater than or equal to the current allowable SO_2 emissions rate under rule 3745-103-36 of the Administrative Code, the number of allowances allocated for each year equals:

$$\text{Allowances} = \frac{\begin{bmatrix}\text{Baseline}\\ \text{Or}\\ \text{Alternative Baseline}\end{bmatrix} \times \text{The Lesser Of} \begin{bmatrix}\text{The Actual } SO_2 \text{ Emissions Rate}\\ \text{Or}\\ \text{The 1985 Allowable } SO_2 \text{ Emissions Rate}\\ \text{Or}\\ \text{The Current Allowable } SO_2 \text{ Emissions Rate}\end{bmatrix}}{2000}$$

(B) For combustion sources for which the current promulgated SO_2 emissions limit under rule 3745-103-37 of the Administrative Code is less than the current allowable SO_2 emissions rate under rule 3745-103-36 of the Administrative Code,

(1) The number of allowances for each year ending prior to the effective date of the promulgated SO_2 emissions limit equals:

$$\text{Allowances} = \frac{\begin{bmatrix}\text{Baseline}\\ \text{Or}\\ \text{Alternative Baseline}\end{bmatrix} \times \text{The Lesser Of} \begin{bmatrix}\text{The Actual } SO_2 \text{ Emissions Rate}\\ \text{Or}\\ \text{The 1985 Allowable } SO_2 \text{ Emissions Rate}\\ \text{Or}\\ \text{The Current Allowable } SO_2 \text{ Emissions Rate}\end{bmatrix}}{2000}$$

(2) The number of allowances for the year that includes the effective date of the promulgated SO_2 emissions limit and for each year thereafter equals:

$$\text{Allowances} = \frac{\begin{bmatrix}\text{Baseline}\\ \text{Or}\\ \text{Alternative Baseline}\end{bmatrix} \times \text{The Lesser Of} \begin{bmatrix}\text{The Actual } SO_2 \text{ Emissions Rate}\\ \text{Or}\\ \text{The 1985 Allowable } SO_2 \text{ Emissions Rate}\\ \text{Or}\\ \text{The Current Promulgated } SO_2 \text{ Emissions Rate}\end{bmatrix}}{2000}$$

R.C. 119.032 review dates: 08/24/2011 and 08/24/2016

CERTIFIED ELECTRONICALLY
Certification

08/24/2011
Date

Promulgated Under: 119.03
Statutory Authority: 3704.03(E)
Rule Amplifies: 3704.03(A), 3704.03(E)
Prior Effective Dates: 9/10/97, 6/27/02, 1/12/07

3745-103-39 **Allowance allocation for combustion sources becoming opt-in sources on a date other than January first.**

(A) Date of entry.

(1) If an opt-in source provided monthly data under rule 3745-103-33 of the Administrative Code, the opt-in source's opt-in permit may become effective at the beginning of a calendar quarter as of January first, April first, July first, or October first.

(2) If an opt-in source provided annual data under rule 3745-103-33 of the Administrative Code, the opt-in source's opt-in permit must become effective on January first.

(B) Prorating by calendar quarter. Where a combustion source's opt-in permit becomes effective on April first, July first, or October first of a given year, the USEPA will prorate the allowance allocation for that first year by the calendar quarters remaining in the year as follows:

Allowances for the first year

$$= \left(\frac{\text{First Year Partial Baseline}}{\text{Baseline Or Alternative Baseline}} \right) \times \text{Annual Allocation Of Allowances For The First Year}$$

(1) For combustion sources that commenced operations before January 1, 1985,

$$\text{First Year Partial Baseline} = \frac{\sum_{\text{Year} = 1985}^{1987} \text{Fuel Consumption For Remaining Calendar Quarters}}{3}$$

(2) For combustion sources that commenced operations after January 1, 1985,

$$\text{First Year Partial Baseline} = \sum_{\text{First 3 Consecutive Years}} \frac{\text{Fuel Consumption For The Remaining Calendar Quarters}}{3}$$

(3) Under paragraphs (B)(1) and (B)(2) of this rule,

(a) "Remaining calendar quarters" shall be the calendar quarters in the first year for which the opt-in permit will be effective.

(b) Fuel consumption for remaining calendar quarters =

$$\sum_{\text{Months} = \text{Apr., Jul., Or Oct.}}^{\text{Dec}} \sum_{\text{Fuel Types}} \text{Quantity Of Fuel Consumed} \times \text{Heat Content} \times \text{Unit Conversion}$$

Where unit conversion = 2 for coal

= 0.001 for oil

= 1 for gas

For other fuels, the combustion source must specify unit conversion;

And where starting month = April, if effective date is April first;

= July, if effective date is July first

= October, if effective date is October first

R.C. 119.032 review dates: 08/24/2011 and 08/24/2016

CERTIFIED ELECTRONICALLY
Certification

08/24/2011
Date

Promulgated Under: 119.03
Statutory Authority: 3704.03(E)
Rule Amplifies: 3704.03(A), 3704.03(E)
Prior Effective Dates: 9/10/97, 1/12/07

3745-103-40 **Allowance calculation for process sources.**

[Reserved]

Effective: 01/12/2007

R.C. 119.032 review dates: Exempt

CERTIFIED ELECTRONICALLY
Certification

12/29/2006
Date

Promulgated Under: 119.03
Statutory Authority: 3704.03(E)
Rule Amplifies: 3704.03(A), 3704.03(E)
Prior Effective Dates: 9/10/1997

3745-103-41 **Establishment of opt-in source allowance accounts.**

(A) Establishing accounts. Not earlier than the date on which a combustion or process source becomes an affected unit under this chapter and upon receipt of a request for a compliance account under paragraph (B) of this rule, the USEPA will establish a compliance account (unless the source that includes the opt-in source already has a compliance account or the opt-in source has, under paragraph (C) of rule 3745-103-25 of the Administrative Code, a different designated representative than the designated representative for the source) and allocate allowances in accordance with rules 3745-103-33 to 3745-103-39 of the Administrative Code for combustion sources or rule 3745-103-40 of the Administrative Code for process sources.

(B) Request for opt-in account. The designated representative of the opt-in source shall, on or after the effective date of the opt-in permit as specified in paragraph (D) of rule 3745-103-28 of the Administrative Code, submit a letter requesting the opening of a compliance account (unless the source that includes the opt-in source already has a compliance account or the opt-in has, under paragraph (C) of rule 3745-103-25 of the Administrative Code, a different designated representative than the designated representative for the source) in the allowance tracking system to the USEPA.

R.C. 119.032 review dates: 08/24/2011 and 08/24/2016

CERTIFIED ELECTRONICALLY
Certification

08/24/2011
Date

Promulgated Under: 119.03
Statutory Authority: 3704.03(E)
Rule Amplifies: 3704.03(A), 3704.03(E)
Prior Effective Dates: 9/10/97, 1/12/07

3745-103-42 **Identifying allowances.**

[Comment: For dates of non-regulatory government publications, publications of recognized organizations and associations, federal rules, and federal statutory provisions referenced in this rule, see paragraph (C) of rule 3745-103-01 of the Administrative Code titled "Referenced materials."]

(A) Identifying allowances. Allowances allocated to an opt-in source will be assigned a serial number that identifies the allowances as being allocated under an opt-in permit.

(B) Submittal of opt-in allowances for auction.

(1) An authorized account representative may offer for sale in the spot auction under 40 CFR 73.70 allowances that are allocated to opt-in sources, if the allowances have a compliance use date earlier than the year in which the spot auction is to be held and if the USEPA has completed the deductions for compliance under 40 CFR 73.35(b) for the compliance year corresponding to the compliance use date of the offered allowances.

(2) Authorized account representatives may not offer for sale in the advance auctions under 40 CFR 73.70 allowances allocated to opt-in sources.

Effective: 11/10/2011

R.C. 119.032 review dates: 08/24/2011 and 08/24/2016

CERTIFIED ELECTRONICALLY
Certification

10/31/2011
Date

Promulgated Under: 119.03
Statutory Authority: 3704.03(E)
Rule Amplifies: 3704.03(A), 3704.03(E)
Prior Effective Dates: 9/10/97, 1/12/07

3745-103-43 **Prohibition on future year transfers.**

(A) With regard to a transfer request submitted for recordation during the period starting January first and ending with the allowance transfer deadline in the same year, the USEPA will not record a transfer of an opt-in allowance that is allocated to an opt-in source for the year in which the transfer request is submitted or a subsequent year.

(B) With regard to a transfer request during the period starting with the day after an allowance transfer deadline and ending December thirty-first in the same year, the USEPA will not record a transfer of an opt-in allowance that is allocated to an opt-in source for a year after the year in which the transfer request is submitted.

R.C. 119.032 review dates: 08/24/2011 and 08/24/2016

CERTIFIED ELECTRONICALLY
Certification

08/24/2011
Date

Promulgated Under: 119.03
Statutory Authority: 3704.03(E)
Rule Amplifies: 3704.03(A), 3704.03(E)
Prior Effective Dates: 9/10/97, 1/12/07

3745-103-44 **Annual compliance certification report.**

[Comment: For dates of non-regulatory government publications, publications of recognized organizations and associations, federal rules, and federal statutory provisions referenced in this rule, see paragraph (C) of rule 3745-103-01 of the Administrative Code titled "Referenced materials."]

(A) Applicability and deadline. For each calendar year in which an opt-in source is subject to the acid rain emissions limitations, the designated representative of the opt-in source shall submit to the USEPA, no later than sixty days after the end of the calendar year, an annual compliance certification report for the opt-in source.

(B) Contents of report. The designated representative shall include in the annual compliance certification report the following elements, in a format prescribed by the USEPA, concerning the opt-in source and the calendar year covered by the report:

(1) Identification of the opt-in source;

(2) An opt-in utilization report in accordance with rule 3745-103-45 of the Administrative Code for combustion sources;

(3) A thermal energy compliance report in accordance with rule 3745-103-48 of the Administrative Code for combustion sources, if applicable;

(4) Shutdown or reconstruction information in accordance with rule 3745-103-47 of the Administrative Code, if applicable;

(5) A statement that the opt-in source has not become an affected unit under rule 3745-103-02 of the Administrative Code;

(6) At the designated representative's option, the total number of allowances to be deducted for the year, using the formula in rule 3745-103-50 of the Administrative Code, and the serial numbers of the allowances that are to be deducted; and

(7) In an annual compliance certification report for a year during 1995 through 2005, at the designated representative's option, for opt-in sources that share a common stack and whose emissions of sulfur dioxide are not monitored separately or apportioned in accordance with 40 CFR Part 75, the percentage of the total number of allowances under paragraph (B)(6) of this rule for all such affected units that is to be deducted from each affected unit's compliance subaccount; and

(8) In an annual compliance certification report for a year during 1995 through 2005, the compliance certification under paragraph (C) of this rule.

(C) Annual compliance certification. In the annual compliance certification report under paragraph (A) of this rule, the designated representative shall certify, based on reasonable inquiry of those persons with primary responsibility for operating the opt-in source in compliance with the acid rain program, whether the opt-in source was operated during the calendar year covered by the report in compliance with the requirements of the acid rain program applicable to the opt-in source, including:

(1) Whether the opt-in source was operated in compliance with applicable acid rain emissions limitations, including whether the opt-in source held allowances, as of the allowance transfer deadline, in its compliance subaccount after accounting for any allowance deductions or other adjustments under 40 CFR 73.34(c) not less than the opt-in source's total sulfur dioxide emissions during the calendar year covered by the annual report;

(2) Whether the monitoring plan that governs the opt-in source has been maintained to reflect the actual operation and monitoring of the opt-in source and contains all information necessary to attribute monitored emissions to the opt-in source;

(3) Whether all the emissions from the opt-in source or group of affected units (including the opt-in source) using a common stack were monitored or accounted for through the missing data procedures and reported in the quarterly monitoring reports in accordance with 40 CFR Part 75;

(4) Whether the facts that form the basis for certification of each monitor at the opt-in source or group of affected units (including the opt-in source) using a common stack or of an opt-in source's qualifications for using an acid rain program accepted monitoring method or approved alternative monitoring method, if any, have changed;

(5) If a change is required to be reported under paragraph (C)(4) of this rule, specify the nature of the change, the reason for the change, when the change occurred, and how the unit's compliance status was determined subsequent to the change, including what method was used to determine emissions when a change mandated the need for monitoring recertification; and

(6) When applicable, whether the opt-in source was operating in compliance with its thermal energy plan as provided in rule 3745-103-48 of the Administrative Code for combustion sources and rule 3745-103-49 of the Administrative Code for process sources.

Effective: 11/10/2011

R.C. 119.032 review dates: 08/24/2011 and 08/24/2016

CERTIFIED ELECTRONICALLY
Certification

10/31/2011
Date

Promulgated Under: 119.03
Statutory Authority: 3704.03(E)
Rule Amplifies: 3704.03(A), 3704.03(E)
Prior Effective Dates: 9/10/97, 1/12/07

3745-103-45 **Reduced utilization for combustion sources.**

[Comment: For dates of non-regulatory government publications, publications of recognized organizations and associations, federal rules, and federal statutory provisions referenced in this rule, see paragraph_(C) of rule 3745-103-01 of the Administrative Code titled "Referenced materials."]

(A) Calculation of utilization.

(1) Annual utilization.

(a) Except as provided in paragraph (A)(1)(b) of this rule, annual utilization for the calendar year shall be calculated as follows:

Annual utilization = actual heat input + reduction from improved efficiency

Where,

(i) "Actual heat input" shall be the actual annual heat input (in MMBtu) of the opt-in source for the calendar year determined in accordance with appendix F of 40 CFR Part 75.

(ii) "Reduction from improved efficiency" shall be the sum of the following four elements:

(a) Reduction from demand side measures that improve the efficiency of electricity consumption;

(b) Reduction from demand side measures that improve the efficiency of steam consumption;

(c) Reduction from improvements in the heat rate at the opt-in source; and

(d) Reduction from improvement in the efficiency of steam production at the opt-in source. Qualified demand side measures applicable to the calculation of utilization for opt-in sources are listed in appendix A, section 1 of 40 CFR Part 73.

(iii) "Reduction from demand side measures that improve the efficiency of electricity consumption" shall be a good faith estimate of the expected kilowatt hour savings during the calendar year for such measures and the corresponding reduction in heat input (in MMBtu) resulting from those measures. The demand side measures shall be implemented at the opt-in source, in the residence or facility to which the opt-in source

delivers electricity for consumption or in the residence or facility of a customer to whom the opt-in source's utility system sells electricity. The verified amount of such reduction shall be submitted in accordance with paragraph (C)(2) of this rule.

(iv) "Reduction from demand side measures that improve the efficiency of steam consumption" shall be a good faith estimate of the expected steam savings (in MMBtu) from such measures during the calendar year and the corresponding reduction in heat input (in MMBtu) at the opt-in source as a result of those measures. The demand side measures shall be implemented at the opt-in source or in the facility to which the opt-in source delivers steam for consumption. The verified amount of such reduction shall be submitted in accordance with paragraph (C)(2) of this rule.

(v) "Reduction from improvements in heat rate" shall be a good faith estimate of the expected reduction in heat rate during the calendar year and the corresponding reduction in heat input (in MMBtu) at the opt-in source as a result of all improved unit efficiency measures at the opt-in source and may include supply-side measures listed in appendix A, section 2.1 of 40 CFR Part 73. The verified amount of such reduction shall be submitted in accordance with paragraph (C)(2) of this rule.

(vi) "Reduction from improvement in the efficiency of steam production at the opt-in source" shall be a good faith estimate of the expected improvement in the efficiency of steam production at the opt-in source during the calendar year and the corresponding reduction in heat input (in MMBtu) at the opt-in source as a result of all improved steam production efficiency measures. In order to claim improvements in the efficiency of steam production, the designated representative of the opt-in source must demonstrate to the satisfaction of the USEPA that the heat rate of the opt-in source has not increased. The verified amount of such reduction shall be submitted in accordance with paragraph (C)(2) of this rule.

(vii) Notwithstanding paragraph (A)(1)(a)(ii) of this rule, where two or more opt-in sources, or two or more opt-in sources and phase I units, include in their annual compliance certification reports their good faith estimate of kilowatt hour savings or steam savings from the same specific measures:

(a) The designated representatives of all such opt-in sources and phase I units shall submit with their annual compliance certification reports a certification signed by all such designated representatives. The certification shall apportion the total kilowatt

hour savings or steam savings among such opt-in sources and phase I units.

(b) Each designated representative shall include in their annual compliance certification report only their share of kilowatt hour savings or steam savings.

(b) For an opt-in source whose opt-in permit becomes effective on a date other than January first,

Annual utilization for the first year shall be calculated as follows:

--

Annual Utilization	=	Actual Heat Input For The Remaining Calendar Quarters	+	Reduction From Improved Efficiency for The Remaining Calendar Quarters

Where "actual heat input" and "reduction from improved efficiency" are defined as set forth in paragraph (A)(1)(a) of this rule but are restricted to data or estimates for the "remaining calendar quarters", which are the calendar quarters that begin on or after the date the opt-in permit becomes effective.

(2) Average utilization. Average utilization for the calendar year shall be defined as the average of the annual utilization calculated as follows:

(a) For the first two calendar years after the effective date of an opt-in permit taking effect on January first, average utilization will be calculated as follows:

(i) Average utilization for the first year = annual utilization$_{\text{year 1}}$

Where "annual utilization$_{\text{year1}}$" is as calculated under paragraph (A)(1)(a) of this rule.

(ii) Average utilization for the second year

$$= \left(\frac{\textit{Revised Annual Utilization}_{\textit{Year 1}} + \textit{Annual Utilization}_{\textit{Year 2}}}{2} \right)$$

Where,

"Revised annual utilization$_{\text{year 1}}$" is as submitted for the year under paragraph (C)(2)(a)(ii) of this rule and adjusted under paragraph

(C)(2)(c) of this rule; "annual utilization$_{year\ 2}$" is as calculated under paragraph (A)(1)(a) of this rule.

(b) For the first three calendar years after the effective date of the opt-in permit taking effect on a date other than January first, average utilization will be calculated as follows:

(i) Average utilization for the first year after opt-in = annual utilization$_{year\ 1}$ where "annual utilization$_{year\ 1}$" is as calculated under paragraph (A)(1)(b) of this rule.

(ii) Average utilization for the second year after opt-in

$$= \left(\frac{\textit{Revised Annual Utilization}_{Year\ 1} + \textit{Annual Utilization}_{Year\ 2}}{\left(\begin{array}{c} \textit{Number Of Months} \\ \textit{In Year 1 And Year 2 For Which} \\ \textit{The Opt-In Permit Is Effective} \end{array} \right)} \right) x\ 12$$

Where,

"Revised annual utilization$_{year\ 1}$" is as submitted for the year under paragraph (C)(2)(a)(ii) of this rule and adjusted under paragraph (C)(2)(c) of this rule; and "annual utilization$_{year\ 2}$" is as calculated under paragraph (A)(1)(b) of this rule.

(iii) Average utilization for the third year after opt-in

$$= \left(\frac{\textit{Revised Annual Utilzation}_{Year\ 1} + \textit{Revised Annual Utilization}_{Year\ 2} + \textit{Annual Utilization}_{Year\ 3}}{\left(\begin{array}{c} \textit{Number Of Months} \\ \textit{In Year 1, Year 2, And Year 3} \\ \textit{For Which The Opt-In Permit Is Effective} \end{array} \right)} \right) x\ 12$$

Where,

"Revised annual utilization$_{year\ 1}$" is as submitted for the year under paragraph (C)(2)(a)(ii) of this rule and adjusted under paragraph (C)(2)(c) of this rule; and "revised annual utilization$_{year\ 2}$" is as submitted for the year under paragraph (C)(2)(a)(ii) of this rule; and "annual utilization$_{year\ 3}$" is as calculated under paragraph (A)(1)(b) of this rule.

(c) Except as provided in paragraphs (A)(2)(a) and (A)(2)(b) of this rule, average utilization shall be the sum of annual utilization for the calendar year and the revised annual utilization, submitted under paragraph (C)(2)(a)(ii) of this rule and adjusted by the USEPA under paragraph

(C)(2)(c) of this rule, for the two immediately preceding calendar years divided by three.

(B) Determination of reduced utilization and calculation of allowances.

(1) Determination of reduced utilization. For a year during which its opt-in permit is effective, an opt-in source has reduced utilization if the opt-in source's average utilization for the calendar year, as calculated under paragraph (A) of this rule, is less than its baseline.

(2) Calculation of allowances deducted for reduced utilization. If the USEPA determines that an opt-in source has reduced utilization for a calendar year during which the opt-in source's opt-in permit is in effect, the USEPA will deduct allowances, as calculated under paragraph (B)(2)(a) of this rule, from the compliance subaccount of the opt-in source's allowance tracking system account.

(a) Allowances deducted for reduced utilization =

$$\textit{Number Of Allowances Allocated For The Calendar Year} \; x \left(1 - \left(\frac{\textit{Average Utilization}_{\textit{Calendar Year}}}{\textit{Baseline}}\right)\right)$$

(b) The allowances deducted shall have the same or an earlier compliance use date as those allocated under rules 3745-103-33 to 3745-103-39 of the Administrative Code for the calendar year for which the opt-in source has reduced utilization.

(C) Compliance.

(1) Opt-in utilization report. The designated representative for each opt-in source shall submit an opt-in utilization report for the calendar year, as part of its annual compliance certification report under rule 3745-103-44 of the Administrative Code, that shall include the following elements in a format prescribed by the USEPA:

(a) The name, authorized account representative identification number, and telephone number of the designated representative of the opt-in source;

(b) The account identification number in the allowance tracking system of the source that includes the opt-in source;

(c) The opt-in source's annual utilization for the calendar year, as defined under paragraph (A)(1) of this rule, and the revised annual utilization, submitted under paragraph (C)(2)(a)(ii) of this rule and adjusted under paragraph (C)(2)(c) of this rule, for the two immediately preceding calendar years;

(d) The opt-in source's average utilization for the calendar year, as defined under paragraph (A)(2) of this rule.

(e) The difference between the opt-in source's average utilization and its baseline;

(f) The number of allowances that shall be deducted, if any, using the formula in paragraph (B)(2)(a) of this rule and the supporting calculations.

(2) Confirmation report.

(a) If the annual compliance certification report for an opt-in source includes estimates of any reduction in heat input resulting from improved efficiency as defined under paragraph (A)(1)(a) of this rule, the designated representative shall submit, by July first of the year in which the annual compliance certification report was submitted, a confirmation report, concerning the calendar year covered by the annual compliance certification report. The USEPA may grant, for good cause shown, an extension of the time to file the confirmation report. The confirmation report shall include the following elements in a format prescribed by the USEPA:

(i) Verified reduction in heat input. Any verified KWH savings or any verified steam savings from demand side measures that improve the efficiency of electricity or steam consumption, any verified reduction in the heat rate at the opt-in source, or any verified improvement in the efficiency of steam production at the opt-in source achieved and the verified corresponding reduction in heat input for the calendar year that resulted.

(ii) Revised annual utilization. The opt-in source's annual utilization for the calendar year as provided under paragraph (C)(1)(c) of this rule, recalculated using the verified reduction in heat input for the calendar year under paragraph (C)(2)(c)(v) of this rule.

(iii) Revised average utilization. The opt-in source's average utilization as provided under paragraph (C)(1)(d) of this rule, recalculated using the verified reduction in heat input for the calendar year under paragraph (C)(2)(a)(i) of this rule.

(iv) Recalculation of reduced utilization. The difference between the opt-in source's recalculated average utilization and its baseline.

(v) Allowance adjustment. The number of allowances that should be credited or deducted using the formulas in paragraphs (C)(2)(c)(iii) and (C)(2)(c)(iv) of this rule and the supporting calculations; and the

number of adjusted allowances remaining using the formula in paragraph (C)(2)(a)(i) of this rule and the supporting calculations.

(b) Documentation.

(i) For all figures under paragraph (C)(2)(a)(i) of this rule, the opt-in source must provide as part of the confirmation report, documentation (which may follow the USEPA conservation verification protocol) verifying the figures to the satisfaction of the USEPA.

(ii) Notwithstanding paragraph (C)(2)(a)(i) of this rule, where two or more opt-in sources and phase I units, or two or more opt-in sources and phase I units include in the confirmation report under paragraph (C)(2) of this rule or 40 CFR 72.91(b) the verified kilowatt hour savings or steam savings defined under paragraph (C)(2)(a)(i) of this rule for the calendar year, from the same specific measures:

(a) The designated representatives of all such opt-in sources and phase I units shall submit with their confirmation reports a certification signed by all such designated representatives. The certification shall apportion the total kilowatt hour savings or steam savings as defined under paragraph (C)(2)(a)(i) of this rule for the calendar year among such opt-in sources.

(b) Each designated representative shall include in the opt-in source's confirmation report only its share of the verified reduction in heat input as defined under paragraph (C)(2)(a)(i) of this rule for the calendar year under the certification under paragraph (C)(2)(b)(ii)(a) of this rule.

(c) Determination of reduced utilization based on confirmation report.

(i) If an opt-in source must submit a confirmation report as specified under paragraph (C)(2) of this rule, the USEPA, upon such submittal, will adjust its determination of reduced utilization for the calendar year for the opt-in source. Such adjustment will include the recalculation of both annual utilization and average utilization, using verified reduction in heat input as defined under paragraph (C)(2)(a)(i) of this rule for the calendar year instead of the previously estimated values.

(ii) Estimates confirmed. If the total, included in the confirmation report, of the amounts of verified reduction in the opt-in source's heat input equals the total estimated in the opt-in source's annual compliance certification report for the calendar year, then the designated representative shall include in the confirmation report a statement indicating that it is true.

(iii) Underestimate. If the total, included in the confirmation report, of the amounts of verified reduction in the opt-in source's heat input is greater than the total estimated in the opt-in source's annual compliance certification report for the calendar year, then the designated representative shall include in the confirmation report the number of allowances to be credited to the compliance account of the source that includes the opt-in source calculated using the following formula:

Allowances credited for the calendar year in which the reduced utilization occurred =

$$\textit{Number Of Allowances Allocated For The Calendar Year } x \left[\frac{\textit{Average Utilization}_{\textit{Verified}} - \textit{Average Utilization}_{\textit{Estimate}}}{\textit{Baseline}} \right]$$

Where,

Average $\text{utilization}_{\text{estimate}}$ = the average utilization of the opt-in source as defined under paragraph (A)(2) of this rule, calculated using the estimated reduction in the opt-in source's heat input under paragraph (A)(1) of this rule, and submitted in the annual compliance certification report for the calendar year. Average $\text{utilization}_{\text{verified}}$ = The average utilization of the opt-in source as defined under paragraph (A)(2) of this rule, calculated using the verified reduction in the opt-in source's heat input as submitted under paragraph (C)(2)(a)(i) of this rule by the designated representative in the confirmation report.

(iv) Overestimate. If the total of the amounts of verified reduction in the opt-in source's heat input included in the confirmation report is less than the total estimated in the opt-in source's annual compliance certification report for the calendar year, then the designated representative shall include in the confirmation report the number of allowances to be deducted from the compliance account of the source that includes the opt-in source, which equals the absolute value of the result of the formula for allowances credited under paragraph (C)(2)(c)(iii) of this rule.

(v) Adjusted allowances remaining. Unless paragraph (C)(2)(c)(ii) of this rule applies, the designated representative shall include in the confirmation report the adjusted amount of allowances that would have been held in the opt-in source's compliance subaccount if the deductions made under 40 CFR 73.35(b) had been based on the verified, rather than the estimated, reduction in the opt-in source's heat input, calculated as follows:

--

Adjusted Amount Of Allowances	=	Allowances Held After Deduction - Excess Emissions + Allowances Credited - Allowances Deducted

Where:

"Allowances held after deduction" shall be the amount of allowances held in the opt-in source's compliance subaccount after deduction of allowances was made under 40 CFR 73.35(b) based on the annual compliance certification report. "Excess emissions" shall be the amount, if any, of excess emissions determined under 40 CFR 73.35(d) for the calendar year based on the annual compliance certification report. "Allowances credited" shall be the amount of allowances calculated under paragraph (C)(2)(c)(iii) of this rule. "Allowances deducted" shall be the amount of allowances calculated under paragraph (C)(2)(c)(iv) of this rule.

(a) If the result of the formula for "adjusted amount of allowances" is negative, the absolute value of the result constitutes excess emissions of sulfur dioxide. If the result is positive, there are no excess emissions of sulfur dioxide.

(b) If the amount of excess emissions of sulfur dioxide calculated under "adjusted amount of allowances" differs from the amount of excess emissions of sulfur dioxide determined under 40 CFR 73.35 based on the annual compliance certification report, then the designated representative shall include in the confirmation report a demonstration of:

(i) The number of allowances that should be deducted to offset any increase in excess emissions or returned to the account for any decrease in excess emissions; and

(ii) The amount of the excess emissions penalty, excluding interest, that should be paid or returned to the account for the change in excess emissions.

(c) The USEPA will deduct immediately from the compliance account of the source that includes the opt-in source the amount of allowances that USEPA or Ohio EPA determines is necessary to offset any increase in excess emissions or will return immediately to the opt-in source's compliance subaccount the amount of allowances that is determined necessary to account for any decrease in excess emissions.

(d) The designated representative may identify the serial numbers of the allowances to be deducted or returned. In the absence of such identification, the deduction will be on a first-in, first-out basis under 40 CFR 73.35(c)(2) and the identification of allowances returned will be at the USEPA's discretion.

(e) If the designated representative of an opt-in source fails to submit on a timely basis a confirmation report, in accordance with paragraph (C)(2) of this rule, with regard to the estimate of reductions in heat input as defined under paragraph (C)(2)(a)(i) of this rule, then the USEPA will reject such estimate and correct it to equal zero in the opt-in source's annual compliance certification report that includes that estimate. The USEPA will deduct immediately, on a first-in, first-out basis under 40 CFR 73.35(c)(2), the amount of allowances that it determines is necessary to offset any increase in excess emissions of sulfur dioxide that results from the correction and will require the owners and operators of the opt-in source to pay an excess emission penalty in accordance with 40 CFR Part 77.

(f) If the opt-in source is governed by an approved thermal energy plan under rule 3745-103-48 of the Administrative Code and if the opt-in source must submit a confirmation report as specified under paragraph (C)(2) of this rule, the adjusted amount of allowances that should remain in the compliance account of the source that includes the opt-in source shall be calculated as follows:

Adjusted amount of allowances =

Allowances Allocated or Acquired - Tons Emitted - The Larger Of [Allowances Transferred To All Replacement Units Or Allowances Deducted For Reduced Utilization]

Where, "allowances allocated or acquired" shall be the number of allowances held in the compliance account of the source that includes the opt-in source at the allowance transfer deadline plus the number of allowances transferred for the previous calendar year to all replacement units under an approved thermal energy plan in accordance with paragraph (A)(6) of rule 3745-103-48 of the Administrative Code. "Tons emitted" shall be the total tons of sulfur dioxide emitted by the opt-in source during the calendar year, as reported in accordance with rules 3745-103-52 and 3745-103-53 of the Administrative Code for combustion sources. "Allowances transferred to all replacement units" shall be the sum of allowances transferred to all replacement units under an approved thermal energy plan in accordance with rule 3745-103-

48 of the Administrative Code and adjusted by the USEPA in accordance with paragraph (D)(2) of rule 3745-103-48 of the Administrative Code. "Allowances deducted for reduced utilization" shall be the total number of allowances deducted for reduced utilization as calculated in accordance with this rule including any adjustments required under paragraph (C)(2)(c)(v) of this rule.

Effective: 11/10/2011

R.C. 119.032 review dates: 08/24/2011 and 08/24/2016

CERTIFIED ELECTRONICALLY
Certification

10/31/2011
Date

Promulgated Under: 119.03
Statutory Authority: 3704.03(E)
Rule Amplifies: 3704.03(A), 3704.03(E)
Prior Effective Dates: 9/10/97, 6/27/02, 1/12/07

3745-103-46 **Reduced utilization for process sources.**

[Reserved]

Effective: 01/12/2007

R.C. 119.032 review dates: Exempt

CERTIFIED ELECTRONICALLY
Certification

12/29/2006
Date

Promulgated Under: 119.03
Statutory Authority: 3704.03(E)
Rule Amplifies: 3704.03(A), 3704.03(E)
Prior Effective Dates: 9/10/1997

3745-103-47 **Opt-in source permanent shutdown, reconstruction, or change in affected status.**

[Comment: For dates of non-regulatory government publications, publications of recognized organizations and associations, federal rules, and federal statutory provisions referenced in this rule, see paragraph_(C) of rule 3745-103-01 of the Administrative Code titled "Referenced materials."

(A) Notification.

(1) When an opt-in source has permanently shutdown during the calendar year, the designated representative shall notify the USEPA and Ohio EPA of the date of shutdown, within thirty days of such shutdown.

(2) When an opt-in source has undergone a modification that qualifies as a reconstruction as defined in 40 CFR 60.15, the designated representative shall notify the USEPA of the date of completion of the reconstruction, within thirty days of such completion.

(3) When an opt-in source becomes an affected unit under rule 3745-103-02 of the Administrative Code, the designated representative shall notify the USEPA and Ohio EPA of such change in the opt-in source's affected status within thirty days of such change.

(B) USEPA's action.

(1) The USEPA will terminate the opt-in source's opt-in permit and deduct allowances as provided below in the following circumstances:

(a) When an opt-in source has permanently shutdown. The USEPA shall deduct allowances equal in number to and with the same or earlier compliance use date as those allocated to the opt-in source under rule 3745-103-41 of the Administrative Code for the calendar year in which the shut down occurs and for all future years following the year in which the shut down occurs; or

(b) When an opt-in source has undergone a modification that qualifies as a reconstruction as defined in 40 CFR 60.15. The USEPA shall deduct allowances equal in number to and with the same or earlier compliance use date as those allocated to the opt-in source under rule 3745-103-41 of the Administrative Code for the calendar year in which the reconstruction is completed and all future years following the year in which the reconstruction is completed; or

(c) When an opt-in source becomes an affected unit under rule 3745-103-02 of the Administrative Code. The USEPA shall deduct allowances equal in

number to and with the same or earlier compliance use date as those allocated to the opt-in source under rule 3745-103-41 of the Administrative Code the calendar year in which the opt-in source becomes affected under rule 3745-103-02 of the Administrative Code and all future years following the calendar year in which the opt-in source becomes affected under rule 3745-103-02 of the Administrative Code; or

(d) When an opt-in source does not renew its opt-in permit. The USEPA shall deduct allowances equal in number to and with the same or earlier compliance use date as those allocated to the opt-in source under rule 3745-103-41 of the Administrative Code for the calendar year in which the opt-in source's opt-in permit expires and all future years following the year in which the opt-in source's opt-in permit expires.

Effective: 11/10/2011

R.C. 119.032 review dates: 08/24/2011 and 08/24/2016

CERTIFIED ELECTRONICALLY
Certification

10/31/2011
Date

Promulgated Under: 119.03
Statutory Authority: 3704.03(E)
Rule Amplifies: 3704.03(A), 3704.03(E)
Prior Effective Dates: 9/10/97, 1/12/07

3745-103-48 **Transfer of allowances from the replacement of thermal energy; combustion sources.**

[Comment: For dates of non-regulatory government publications, publications of recognized organizations and associations, federal rules, and federal statutory provisions referenced in this rule, see paragraph (C) of rule 3745-103-01 of the Administrative Code titled "Referenced materials."]

(A) Thermal energy plan.

(1) General provisions. The designated representative of an opt-in source that seeks to qualify for the transfer of allowances based on the replacement of thermal energy by a replacement unit shall submit a thermal energy plan subject to the requirements of paragraph (A) of rule 3745-103-09 of the Administrative Code for multi-unit compliance options and this rule. The effective period of the thermal energy plan shall begin at the beginning of the calendar quarter (either January first, April first, July first, or October first) for which the plan is approved and end December thirty-first of the last full calendar year for which the opt-in permit containing the plan is in effect.

(2) Applicability. This section shall apply to any designated representative of an opt-in source and any designated representative of each replacement unit seeking to transfer allowances based on the replacement of thermal energy.

(3) Contents. Each thermal energy plan shall contain the following elements in a format prescribed by the USEPA:

(a) The calendar year and quarter that the thermal energy plan takes effect, which shall be the first year and quarter the replacement unit(s) will replace thermal energy of the opt-in source;

(b) The name, authorized account representative identification number, and telephone number of the designated representative of the opt-in source;

(c) The name, authorized account representative identification number, and telephone number of the designated representative of each replacement unit;

(d) The account identification number in the allowance tracking system of the source that includes the opt-in source;

(e) The account identification number in the allowance tracking system of each source that includes a replacement unit;

(f) The type of fuel used by each replacement unit;

(g) The allowable SO_2 emissions rate, expressed in pounds of SO_2 per MMBtu, of each replacement unit for the calendar year for which the plan will take effect. When a thermal energy plan is renewed in accordance with paragraph (A)(9) of this rule, the allowable SO_2 emission rate at each replacement unit will be the most stringent federally enforceable allowable SO_2 emissions rate applicable at the time of renewal for the calendar year for which the renewal will take effect. This rate will not be annualized;

(h) The estimated annual amount of total thermal energy to be reduced at the opt-in source, including all energy flows (steam, gas, or hot water) used for any process or in any heating or cooling application, and, for a plan starting April first, July first, or October first such estimated amount of total thermal energy to be reduced starting April first, July first or October first respectively and ending on December thirty-first;

(i) The estimated amount of total thermal energy at each replacement unit for the calendar year prior to the year for which the plan is to take effect, including all energy flows (steam, gas, or hot water) used for any process or in any heating or cooling application, and, for a plan starting April first, July first, or October first, such estimated amount of total thermal energy for the portion of such calendar year starting April first, July first, or October first respectively and ending on December thirty-first;

(j) The estimated annual amount of total thermal energy at each replacement unit after replacing thermal energy at the opt-in source, including all energy flows (steam, gas, or hot water) used for any process or in any heating or cooling application, and, for a plan starting April first, July first, or October first, such estimated amount of total thermal energy at each replacement unit after replacing thermal energy at the opt-in source starting April first, July first, or October first respectively and ending December thirty-first;

(k) The estimated annual amount of thermal energy at each replacement unit, including all energy flows (steam, gas, or hot water) used for any process or in any heating or cooling application, replacing the thermal energy at the opt-in source, and, for a plan starting April first, July first, or October first, such estimated amount of thermal energy replacing thermal energy at the opt-in source starting April first, July first, or October first respectively and ending December thirty-first;

(l) The estimated total annual fuel input at each replacement unit after replacing thermal energy at the opt-in source, and, for a plan starting April first, July first, or October first, such estimated total fuel input after replacing thermal energy at the opt-in source starting April first, July first, or October first respectively and ending December thirty-first;

(m) The number of allowances calculated under paragraph (B) of this rule that the opt-in source will transfer to each replacement unit represented in the thermal energy plan;

(n) The estimated number of allowances to be deducted for reduced utilization under rule 3745-103-45 of the Administrative Code;

(o) Certification that each replacement unit has entered into a legally binding steam sales agreement to provide the thermal energy, as calculated under paragraph (A)(3)(k) of this rule, that it is replacing for the opt-in source. The designated representative of each replacement unit shall maintain and make available, at the USEPA or the director's request, copies of documents demonstrating that the replacement unit is replacing the thermal energy at the opt-in source.

(4) Submission. The designated representative of the opt-in source seeking to qualify for the transfer of allowances based on the replacement of thermal energy shall submit a thermal energy plan to the director by no later than six months prior to the first calendar year for which the plan is to be in effect. The thermal energy plan shall be signed and certified by the designated representative of the opt-in source and each replacement unit covered by the plan.

(5) Retirement of opt-in source upon enactment of plan.

(a) If the opt-in source will be permanently retired as of the effective date of the thermal energy plan, the opt-in source shall not be required to monitor its emissions upon retirement, consistent with 40 CFR 75.67, provided that the following requirements are met:

(i) The designated representative of the opt-in source shall include in the plan a request for an exemption from the requirements of 40 CFR Part 75 in accordance with 40 CFR 75.67 and shall submit the following statement: "I certify that the opt-in source "is" or "will be", as applicable permanently retired on the date specified in this plan and will not emit any sulfur dioxide or nitrogen oxides after such date."

(ii) The opt-in source shall not emit any sulfur dioxide or nitrogen oxides after the date specified in the plan.

(b) Notwithstanding the monitoring exemption discussed in paragraph (A)(5)(a) of this rule, the designated representative for the opt-in source shall submit the annual compliance certification report provided under paragraph (D) of this rule.

(6) USEPA's action. If the director approves a thermal energy plan, the USEPA will annually transfer allowances to the compliance account of each source that includes a replacement unit, as provided in the approved plan.

(7) Incorporation, modification and renewal of a thermal energy plan.

(a) An approved thermal energy plan, including any revised or renewed plan that is approved, shall be incorporated into both the opt-in permit for the opt-in source and the acid rain permit for each replacement unit governed by the plan. Upon approval, the thermal energy plan shall be incorporated into the acid rain permit for each replacement unit pursuant to the requirements for administrative permit amendments under rule 3745-103-18 of the Administrative Code.

(b) In order to revise an opt-in permit to add an approved thermal energy plan or to change an approved thermal energy plan, the designated representative of the opt-in source shall submit a plan or a revised plan under paragraph (A)(4) of this rule and meet the requirements for permit revisions under rule 3745-103-15 of the Administrative Code and either rule 3745-103-16 or 3745-103-17 of the Administrative Code.

(8) Termination of plan.

(a) A thermal energy plan shall be in effect until the earlier of the expiration of the opt-in permit for the opt-in source or the year for which a termination of the plan takes effect under paragraph (A)(8)(b) of this rule.

(b) Termination of plan by opt-in source and replacement units. A notification to terminate a thermal energy plan in accordance with paragraph (C) of rule 3745-103-09 of the Administrative Code shall be submitted no later than December first of the calendar year for which the termination is to take effect.

(c) If the requirements of paragraph (A)(8)(b) of this rule are met and upon revision of the opt-in permit of the opt-in source and the acid rain permit of each replacement unit governed by the thermal energy plan to terminate the plan pursuant to rule 3745-103-18 of the Administrative Code, the USEPA will adjust the allowances for the opt-in source and the replacement units to reflect the transfer back to the opt-in source of the allowances transferred from the opt-in source under the plan for the year for which the termination of the plan takes effect.

(9) Renewal of thermal energy plan. The designated representative of an opt-in source may renew the thermal energy plan as part of its opt-in permit renewal in accordance with rule 3745-103-32 of the Administrative Code.

(B) Calculation of transferable allowances.

(1) Qualifying thermal energy. The amount of thermal energy credited towards the transfer of allowances based on the replacement of thermal energy shall equal the qualifying thermal energy and shall be calculated for each replacement unit as follows:

--

Qualifying thermal energy = The estimated thermal energy at the replacement unit under paragraph (A)(3)(k) of this rule

(2) Fuel associated with qualifying thermal energy. The fuel associated with the qualifying thermal energy at each replacement unit shall be calculated as follows:

$$\text{Fuel associated with qualifying thermal energy} = \frac{\text{Qualifying thermal energy}}{\text{Efficiency constant}}$$

Where,

"Qualifying thermal energy" for the replacement is as defined in paragraph (B)(1) of this rule; "efficiency constant" for the replacement unit equals 0.85, where the replacement unit is a boiler, and equals 0.80, where the replacement unit is a cogenerator.

(3) Allowances transferable from the opt-in source to each replacement unit. The number of allowances transferable from the opt-in source to each replacement unit for the replacement of thermal energy is calculated as follows:

$$\text{Transferable allowances for the replacement unit} = \frac{\text{Fuel associated with Qualifying thermal energy} \times \text{Allowable } SO_2 \text{ emission Rate}_{\text{replacement unit}} \text{ (in lb/mmBtu)}}{2000}$$

Where, "allowable SO_2 emission rate" for the replacement unit is as defined in paragraph (A)(3)(g) of this rule; "fuel associated with qualifying thermal energy" is as defined in paragraph (B)(2) of this rule;

(C) Transfer prohibition. The allowances transferred from the opt-in source to each replacement unit shall not be transferred from the compliance account of the source that includes the replacement unit to any other allowance tracking system account.

(D) Compliance

(1) Annual compliance certification report.

(a) As required for all opt-in sources, the designated representative of the opt-in source covered by a thermal energy plan shall submit an opt-in utilization

report for the calendar year as part of its annual compliance certification report under paragraph (C)(1) of rule 3745-103-45 of the Administrative Code.

(b) The designated representative of an opt-in source shall submit a thermal energy compliance report for the calendar year as part of the annual compliance certification report, which must include the following elements in a format prescribed by the USEPA:

(i) The name, authorized account representative identification number, and telephone number of the designated representative of the opt-in source;

(ii) The name, authorized account representative identification number, and telephone number of the designated representative of each replacement unit;

(iii) The account identification number in the allowance tracking system of the source that includes the opt-in source;

(iv) The account identification number in the allowance tracking system of each source that includes a replacement unit;

(v) The actual amount of total thermal energy reduced at the opt-in source during the calendar year, including all energy flows (steam, gas, or hot water) used for any process or in any heating or cooling application;

(vi) The actual amount of thermal energy at each replacement unit, including all energy flows (steam, gas, or hot water) used for any process or in any heating or cooling application, replacing the thermal energy at the opt-in source;

(vii) The actual amount of total thermal energy at each replacement unit after replacing thermal energy at the opt-in source, including all energy flows (steam, gas, or hot water) used for any process or in any heating or cooling application;

(viii) The actual total fuel input at each replacement unit as determined in accordance with 40 CFR Part 75;

(ix) The calculations of allowance adjustments to be performed by the USEPA in accordance with paragraph (D)(2) of this rule.

(2) Allowance adjustments by USEPA.

(a) The USEPA will adjust the number of allowances in the compliance account for each source that includes the opt-in source or a replacement unit to

reflect any changes between the estimated values submitted in the thermal energy plan pursuant to paragraph (A) of this rule and the actual values submitted in the thermal energy compliance report pursuant to paragraph (D) of this rule. The values to be considered for this adjustment include:

(i) The number of allowances transferable by the opt-in source to each replacement unit, calculated in paragraph (B) of this rule using the actual, rather than estimated, thermal energy at the replacement unit replacing thermal energy at the opt-in source.

(ii) The number of allowances deducted from the compliance account of the source that includes the opt-in source, calculated under paragraph (B)(2) of rule 3745-103-45 of the Administrative Code.

(b) If the opt-in source includes in the opt-in utilization report under rule 3745-103-45 of the Administrative Code estimates for reductions in heat input, then the USEPA will adjust the number of allowances in the compliance account for each source that includes the opt-in source or a replacement unit to reflect any differences between the estimated values submitted in the opt-in utilization report and the actual values submitted in the confirmation report pursuant to paragraph (C)(2) of rule 3745-103-45 of the Administrative Code.

(3) Liability. The owners and operators of an opt-in source or a replacement unit governed by an approved thermal energy plan shall be liable for any violation of the plan or this rule at that opt-in source or replacement unit that is governed by the thermal energy plan, including liability for fulfilling the obligations specified in 40 CFR Part 77 and section 411 of the Clean Air Act.

Effective: 11/10/2011

R.C. 119.032 review dates: 08/24/2011 and 08/24/2016

CERTIFIED ELECTRONICALLY
Certification

10/31/2011
Date

Promulgated Under: 119.03
Statutory Authority: 3704.03(E)
Rule Amplifies: 3704.03(A), 3704.03(E)
Prior Effective Dates: 9/10/97, 6/27/02, 1/12/07

3745-103-49 **Transfer of allowances from the replacement of thermal energy -- process sources.**

[Reserved]

Effective: 01/12/2007

R.C. 119.032 review dates: Exempt

CERTIFIED ELECTRONICALLY
Certification

12/29/2006
Date

Promulgated Under: 119.03
Statutory Authority: 3704.03(E)
Rule Amplifies: 3704.03(A), 3704.03(E)
Prior Effective Dates: 9/10/1997

3745-103-50 **Calculation for deducting allowances.**

(A) Allowance deduction formula. The following formula shall be used to determine the total number of allowances to be deducted for the calendar year from the allowances held in the compliance account of a source that includes an opt-in source as of the allowance transfer deadline applicable to that year:

Total allowances deducted = tons emitted + allowances deducted for reduced utilization, where:

(1) Except as provided in paragraph (A)(2) of this rule, "tons emitted" shall be the total tons of sulfur dioxide emitted by the opt-in source during the calendar year, as reported in accordance with rules 3745-103-52 and 3745-103-53 of the Administrative Code for combustion sources or rule 3745-103-54 of the Administrative Code for process sources.

(2) If the effective date of the opt-in source's permit took effect on a date other than January first, "tons emitted" for the first calendar year shall be the total tons of sulfur dioxide emitted by the opt-in source during the calendar quarters for which the opt-in source's opt-in permit is effective, as reported in accordance with rule 3745-103-52 and 3745-103-53 of the Administrative Code for combustion sources.

(B) "Allowances deducted for reduced utilization" shall be the total number of allowances deducted for reduced utilization as calculated in accordance with rule 3745-103-45 of the Administrative Code for combustion sources or rule 3745-103-46 of the Administrative Code for process sources.

R.C. 119.032 review dates: 08/24/2011 and 08/24/2016

CERTIFIED ELECTRONICALLY
Certification

08/24/2011
Date

Promulgated Under: 119.03
Statutory Authority: 3704.03(E)
Rule Amplifies: 3704.03(A), 3704.03(E)
Prior Effective Dates: 9/10/97, 1/12/07

3745-103-51 **Deducting opt-in source allowances from allowance tracking system accounts.**

[Comment: For dates of non-regulatory government publications, publications of recognized organizations and associations, federal rules, and federal statutory provisions referenced in this rule, see paragraph (C) of rule 3745-103-01 of the Administrative Code titled "Referenced materials."]

(A) Deduction of allowances.

(1) The USEPA may deduct any allowances that were allocated to an opt-in source under rule 3745-103-41 of the Administrative Code by removing, from any allowance tracking system accounts in which they are held, the allowances in an amount specified in paragraph (D) of this rule, under the following circumstances:

(a) When the opt-in source has permanently shut down; or

(b) When the opt-in source has been reconstructed; or

(c) When the opt-in source becomes an affected unit under rule 3745-103-02 of the Administrative Code; or

(d) When the opt-in source fails to renew its opt-in permit.

(2) An opt-in allowance may not be deducted under paragraph (A)(1) of this rule from any allowance tracking system account other than the account of the source that includes the opt-in source allocated such allowance:

(a) After the USEPA has completed the process of recordation as set forth in paragraph (a) of 40 CFR 73.34 following the deduction of allowances from the compliance account of the source that includes the opt-in source for the year for which such allowance may first be used; or

(b) If the opt-in source includes in the annual compliance certification report estimates of any reduction in heat input resulting from improved efficiency under paragraph (A)(1)(a) of rule 3745-103-45 of the Administrative Code, after the USEPA has completed action on the confirmation report concerning such estimated reduction pursuant to paragraphs (C)(2)(c)(v)(c), (C)(2)(c)(v)(d), and (C)(2)(c)(v)(e) of rule 3745-103-45 of the Administrative Code for the year for which such allowance may first be used.

(B) Method of deduction. The USEPA will deduct allowances beginning with those allowances with the latest recorded date of transfer out of the compliance account of the source that includes the opt-in source.

(C) Notification of deduction. When allowances are deducted, the USEPA will send a written notification to the authorized account representative of each allowance tracking system account from which allowances were deducted. The notification will state:

(1) The serial numbers of all allowances deducted from the account,

(2) The reason for deducting the allowances, and

(3) The date of deduction of the allowances.

(D) Amount of deduction. The USEPA may deduct allowances in accordance with paragraph (A) of this rule in an amount required to offset any excess emissions in accordance with 40 CFR Part 77 and when the source that includes the opt-in source does not hold allowances equal in number to and with the same or earlier compliance use date for the calendar years specified under paragraphs (B)(1)(a) to (B)(1)(d) of rule 3745-103-47 of the Administrative Code in an amount required to be deducted under paragraphs (B)(1)(a) to (B)(1)(d) of rule 3745-103-47 of the Administrative Code.

Effective: 11/10/2011

R.C. 119.032 review dates: 08/24/2011 and 08/24/2016

CERTIFIED ELECTRONICALLY
Certification

10/31/2011
Date

Promulgated Under: 119.03
Statutory Authority: 3704.03(E)
Rule Amplifies: 3704.03(A), 3704.03(E)
Prior Effective Dates: 9/10/97, 6/27/02, 1/12/07

3745-103-52 **Monitoring requirements.**

[Comment: For dates of non-regulatory government publications, publications of recognized organizations and associations, federal rules, and federal statutory provisions referenced in this rule, see paragraph (C) of rule 3745-103-01 of the Administrative Code titled "Referenced materials."]

(A) Monitoring requirements for combustion sources. The owner or operator of each combustion source shall meet all of the requirements specified in 40 CFR Part 75 for the owners and operators of an affected unit to install, certify, operate, and maintain a continuous emission monitoring system, an excepted monitoring system, or an approved alternative monitoring system in accordance with 40 CFR Part 75.

(B) Monitoring requirements for opt-in sources. The owner or operator of each opt-in source shall install, certify, operate, and maintain a continuous emission monitoring system, an excepted monitoring system, or an approved alternative monitoring system in accordance with 40 CFR Part 75.

Effective: 11/10/2011

R.C. 119.032 review dates: 08/24/2011 and 08/24/2016

CERTIFIED ELECTRONICALLY
Certification

10/31/2011
Date

Promulgated Under: 119.03
Statutory Authority: 3704.03(E)
Rule Amplifies: 3704.03(A), 3704.03(E)
Prior Effective Dates: 9/10/97, 1/12/07

3745-103-53 **Monitoring plan.**

[Comment: For dates of non-regulatory government publications, publications of recognized organizations and associations, federal rules, and federal statutory provisions referenced in this rule, see paragraph (C) of rule 3745-103-01 of the Administrative Code titled "Referenced materials."]

Monitoring plan. The designated representative of a combustion source shall meet all of the requirements specified under 40 CFR Part 75 for a designated representative of an affected unit to submit to the USEPA a monitoring plan that includes the information required in a monitoring plan under 40 CFR 75.53. This monitoring plan shall be submitted as part of the combustion sources opt-in permit application under rule 3745-103-28 of the Administrative Code.

Effective: 11/10/2011

R.C. 119.032 review dates: 08/24/2016

CERTIFIED ELECTRONICALLY
Certification

10/31/2011
Date

Promulgated Under: 119.03
Statutory Authority: 3704.03(E)
Rule Amplifies: 3704.03(A), 3704.03(E)
Prior Effective Dates: 9/10/97, 1/12/07

3745-103-54 **Monitoring emissions; process sources.**

[Reserved]

Effective: 01/12/2007

R.C. 119.032 review dates: Exempt

CERTIFIED ELECTRONICALLY
Certification

12/29/2006
Date

Promulgated Under: 119.03
Statutory Authority: 3704.03(E)
Rule Amplifies: 3704.03(A), 3704.03(E)
Prior Effective Dates: 9/10/1997

3745-103-55 **NO_x applicability.**

[Comment: For dates of non-regulatory government publications, publications of recognized organizations and associations, federal rules, and federal statutory provisions referenced in this rule, see paragraph (C) of rule 3745-103-01 of the Administrative Code titled "Referenced materials."]

(A) Except as provided in paragraphs (B) to (D) of this rule, the provisions apply to each coal-fired utility unit that is subject to an acid rain emissions limitation or reduction requirement for SO_2 under phase I or phase II pursuant to Sections 404, 405, or 409 of the Clean Air Act.

(B) The emission limitations for NO_x under rules 3745-103-55 to 3745-103-67 of the Administrative Code apply to each affected coal-fired utility unit subject to Section 404(d) or 409(b) of the Clean Air Act on the date the unit is required to meet the acid rain emissions reduction requirement for SO_2.

(C) The provisions of rules 3745-103-55 to 3745-103-67 of the Administrative Code apply to each coal-fired substitution unit or compensating unit, designated and approved by USEPA as a phase I unit pursuant to 40 CFR 72.41 or 40 CFR 72.43 as follows:

(1) A coal-fired substitution unit that is designated in a substitution plan that is approved by USEPA and active as of January 1, 1995 shall be treated as a phase I coal-fired utility unit for purposes of this rule. In the event the designation of such unit as a substitution unit is terminated after December 31, 1995, pursuant to 40 CFR 72.41 and the unit is no longer required to meet phase I SO_2 emissions limitations, the provisions of this part will continue to apply.

(2) A coal-fired substitution unit that is designated in a substitution plan that is not approved by USEPA or not active as of January 1, 1995, or a coal-fired compensating unit, shall be treated as a phase II coal-fired utility unit for purposes of this rule.

(D) The provisions of rules 3745-103-55 to 3745-103-67 of the Administrative Code for phase I units apply to each coal-fired transfer unit governed by a phase I extension plan, approved pursuant to 40 CFR 72.42, on January 1, 1997. Notwithstanding the preceding sentence, a coal-fired transfer unit shall be subject to the acid rain emissions limitations for nitrogen oxides beginning on January 1, 1996 if, for that year, a transfer unit is allocated fewer phase I extension reserve allowances than the maximum amount that the designated representative could have requested in accordance with 40 CFR 72.42(c)(5) (as adjusted under 40 CFR 72.42(d)) unless the transfer unit is the last unit allocated phase I extension reserve allowances under the plan.

Effective: 11/10/2011

R.C. 119.032 review dates: 08/24/2011 and 08/24/2016

CERTIFIED ELECTRONICALLY
Certification

10/31/2011
Date

Promulgated Under: 119.03
Statutory Authority: 3704.03(E)
Rule Amplifies: 3704.03(A), 3704.03(E)
Prior Effective Dates: 6/27/02, 1/12/07

3745-103-56 **General acid rain program provisions.**

(A) The following provisions of this chapter shall apply to rules 3745-103-55 and 3745-103-57 to 3745-103-66 of the Administrative Code:

(1) Rule 3745-103-01 of the Administrative Code (Definitions and incorporation by reference);

(2) Rule 3745-103-02 of the Administrative Code (Applicability);

(3) Rule 3745-103-04 of the Administrative Code (Retired units exemption);

(4) Rule 3745-103-05 of the Administrative Code (Standard requirements).

(B) In addition, the procedures for appeals of decisions under rules 3745-103-55 and 3745-103-57 to 3745-103-66 of the Administrative Code are contained in section 3745.04 of the Revised Code.

Effective: 11/10/2011

R.C. 119.032 review dates: 08/24/2011 and 08/24/2016

CERTIFIED ELECTRONICALLY
Certification

10/31/2011
Date

Promulgated Under: 119.03
Statutory Authority: 3704.03(E)
Rule Amplifies: 3704.03(A), 3704.03(E)
Prior Effective Dates: 6/27/02, 1/12/07

3745-103-57 **NO_x emission limitations for group one phase I boilers.**

[Comment: For dates of non-regulatory government publications, publications of recognized organizations and associations, federal rules, and federal statutory provisions referenced in this rule, see paragraph (C) of rule 3745-103-01 of the Administrative Code titled "Referenced materials."]

(A) Beginning January 1, 1996, or for a unit subject to section 404(D) of the Clean Air Act, the date on which the unit is required to meet acid rain emission reduction requirements for SO_2, the owner or operator of a phase I coal-fired utility unit with a tangentially fired boiler or a dry bottom wall-fired boiler (other than units applying cell burner technology) shall not discharge, or allow to be discharged, emissions of NO_x to the atmosphere in excess of the following limits, except as provided in paragraph (C) or (E) of this rule or in rule 3745-103-62 or 3745-103-63 of the Administrative Code:

(1) Forty-five hundredths pound per MMBtu of heat input on an annual average basis for tangentially fired boilers.

(2) Fifty hundredths pound per MMBtu of heat input on an annual average basis for dry bottom wall-fired boilers (other than units applying cell burner technology).

(B) The owner or operator shall determine the annual average NO_x emission rate, in pound per MMBtu, using the methods and procedures specified in 40 CFR Part 75.

(C) Unless the unit meets the early election requirement of rule 3745-103-60 of the Administrative Code the owner or operator of a coal-fired substitution unit with a tangentially fired boiler or a dry bottom wall-fired boiler (other than units applying cell burner technology) that satisfies the requirements of paragraph (C)(2) of rule 3745-103-55 of the Administrative Code, shall comply with the NO_x emission limitations that apply to group one, phase II boilers.

(D) The owner or operator of a phase I unit with a cell burner boiler that converts to a conventional wall-fired boiler on or before January 1, 1995 or, for a unit subject to Section 404(d) of the Clean Air Act, the date the unit is required to meet acid rain emissions reduction requirements for SO_2 shall comply, by such respective date or January 1, 1996, whichever is later, with the NO_x emissions limitation applicable to dry bottom wall-fired boilers under paragraph (A) of this rule, except as provided in paragraph (C) or (E) of this rule or in rule 3745-103-62 or 3745-103-63 of the Administrative Code.

(E) The owner or operator of a phase I unit with a group one boiler that converts to a fluidized bed or other type of utility boiler not included in group one boilers on or before January 1, 1995 or, a unit subject to Section 404(d) of the Clean Air Act, the date the unit is required to meet acid rain emissions reduction requirements for SO_2

is exempt from the NO_x emissions limitations specified in paragraph (A) of this rule, but shall comply with the NO_x emission limitations for group two boilers under rule 3745-103-58 of the Administrative Code.

(F) Except as provided in rule 3745-103-60 of the Administrative Code and in paragraph (C) of this rule, each unit subject to the requirements of this rule is not subject to the requirements of rule 3745-103-59 of the Administrative Code.

Effective: 11/10/2011

R.C. 119.032 review dates: 08/24/2011 and 08/24/2016

CERTIFIED ELECTRONICALLY
Certification

10/31/2011
Date

Promulgated Under: 119.03
Statutory Authority: 3704.03(E)
Rule Amplifies: 3704.03(A), 3704.03(E)
Prior Effective Dates: 6/27/02, 1/12/07

3745-103-58 **NO_x emission limitations for group two boilers.**

[Comment: For dates of non-regulatory government publications, publications of recognized organizations and associations, federal rules, and federal statutory provisions referenced in this rule, see paragraph (C) of rule 3745-103-01 of the Administrative Code titled "Referenced materials."]

(A) Beginning January 1, 2000 or, for a unit subject to Section 409(b) of the Clean Air Act, the date on which the unit is required to meet acid rain emission reduction requirements for SO_2, the owner or operator of a group two coal-fired boiler with a cell burner boiler, cyclone boiler, a wet bottom boiler, or a vertically fired boiler shall not discharge, or allow to be discharged, emissions of NO_x to the atmosphere in excess of the following limits, except as provided in rule 3745-103-62 or 3745-103-63 of the Administrative Code:

(1) Sixty-eight hundredths pound per MMBtu of heat input on an annual average basis for cell burner boilers. The NO_x emission control technology on which the emission limitation is based is plug-in combustion controls or non-plug-in combustion controls. Except as provided in paragraph (D) of rule 3745-103-57 of the Administrative Code, the owner or operator of a unit with a cell burner boiler that installs non-plug-in combustion controls shall comply with the emission limitation applicable to cell burner boilers.

(2) Eighty-six hundredths pound per MMBtu of heat input on an annual average basis for cyclone boilers with a maximum continuous steam flow at one hundred per cent of load of greater than one thousand sixty, in thousands of pounds per hour. The NO_x emission control technology on which the emission limitation is based is natural gas reburning or selective catalytic reduction.

(3) Eighty four hundredths pound per MMBtu of heat input on an annual average basis for wet bottom boilers, with a maximum continuous steam flow at one hundred per cent of load of greater than four hundred fifty, in thousands of pounds per hour. The NO_x emission control technology on which the emission limitation is based is natural gas reburning or selective catalytic reduction.

(4) Eighty hundredths pound per MMBtu of heat input on an annual average basis for vertically fired boilers. The NO_x emission control technology on which the emission limitation is based is combustion controls.

(B) The owner or operator shall determine the annual average NO_x emission rate, in pound per MMBtu, using the methods and procedures specified in 40 CFR Part 75.

Effective: 11/10/2011

R.C. 119.032 review dates: 08/24/2011 and 08/24/2016

CERTIFIED ELECTRONICALLY
Certification

10/31/2011
Date

Promulgated Under: 119.03
Statutory Authority: 3704.03(E)
Rule Amplifies: 3704.03(A), 3704.03(E)
Prior Effective Dates: 6/27/02, 1/12/07

3745-103-59 **NO_x emission limitations for group one, phase II boilers.**

[Comment: For dates of non-regulatory government publications, publications of recognized organizations and associations, federal rules, and federal statutory provisions referenced in this rule, see paragraph (C) of rule 3745-103-01 of the Administrative Code titled "Referenced materials."]

(A) Beginning January 1, 2000, the owner or operator of a group one, phase II coal-fired utility unit with a tangentially fired boiler or a dry bottom wall-fired boiler shall not discharge, or allow to be discharged, emissions of NO_x to the atmosphere in excess of the following limits, except as provided in rule 3745-103-60, 3745-103-62, or 3745-103-63 of the Administrative Code:

(1) Forty hundredths pound per MMBtu of heat input on an annual average basis for tangentially fired boilers.

(2) Forty six hundredths pound per MMBtu of heat input on an annual average basis for dry bottom wall-fired boilers other than units applying cell burner technology.

(B) The owner or operator shall determine the annual average NO_x emission rate, in pound per MMBtu, using the methods and procedures specified in 40 CFR Part 75.

Effective: 11/10/2011

R.C. 119.032 review dates: 08/24/2011 and 08/24/2016

CERTIFIED ELECTRONICALLY
Certification

10/31/2011
Date

Promulgated Under: 119.03
Statutory Authority: 3704.03(E)
Rule Amplifies: 3704.03(A), 3704.03(E)
Prior Effective Dates: 6/27/02, 1/12/07

3745-103-60 **Early election for group one, phase II boilers.**

[Comment: For dates of non-regulatory government publications, publications of recognized organizations and associations, federal rules, and federal statutory provisions referenced in this rule, see paragraph (C) of rule 3745-103-01 of the Administrative Code titled "Referenced materials."]

(A) General provisions.

(1) The owner or operator of a phase II coal-fired utility unit with a group one boiler may elect to have the unit become subject to the applicable emissions limitation for NO_x under rule 3745-103-57 of the Administrative Code, starting no later than January 1, 1997.

(2) The owner or operator of a phase II coal-fired utility unit with a group one boiler that elects to become subject to the applicable emission limitation under rule 3745-103-57 of the Administrative Code shall not be subject to rule 3745-103-59 of the Administrative Code until January 2008, provided the designated representative demonstrates that the unit is in compliance with the limitation under rule 3745-103-57 of the Administrative Code, using the methods and procedures specified in 40 CFR Part 75, for the period beginning January first of the year in which the early election takes effect (but not later than January 1, 1997) and ending December 31, 2007.

(3) The owner or operator of any phase II unit with a cell burner boiler that converts to conventional burner technology may elect to become subject to the applicable emissions limitation under rule 3745-103-57 of the Administrative Code for dry bottom wall-fired boilers, provided the owner or operator complies with the provisions in paragraph (A)(2) of this rule.

(4) The owner or operator of a phase II unit approved for early election shall not submit an application for an alternative emissions limitation demonstration period under rule 3745-103-62 of the Administrative Code until the earlier of:

(a) January 1, 2008; or

(b) Early election is terminated pursuant to paragraph (D)(3) of this rule.

(5) The owner or operator of a phase II unit approved for early election may not incorporate the unit into an averaging plan prior to January 1, 2000. On or after January 1, 2000, for purposes of the averaging plan, the early election unit will be treated as subject to the applicable emissions limitation for NO_x for phase II units with group one boilers under rule 3745-103-59 of the Administrative Code.

(B) Designated representative. In order to obtain early election status, the designated representative of a phase II unit with a group one boiler must have submitted an early election plan to USEPA by January 1, 1997, and USEPA must have approved such plan.

(C) Ohio EPA's action. Beginning January 1, 2000, the director will approve any early election plan previously approved by USEPA during phase I, unless the plan is terminated pursuant to paragraph (D)(3) of this rule.

(D) Special provisions.

(1) Nitrogen oxides. A unit that is governed by an approved early election plan shall be subject to an emissions limitation for NO_x as provided under paragraph (A)(2) of this rule except as provided under paragraph (D)(3)(b)(i) of this rule.

(2) Liability. The owners and operators of a unit governed by an approved early election plan shall be liable for any violation of the plan or this rule at that unit. The owners and operators shall be liable, beginning January 1, 2000, for fulfilling the obligations specified in 40 CFR Part 77.

(3) Termination. An approved early election plan shall be in effect only until the earlier of January 1, 2008 or January first of the calendar year for which a termination of the plan takes effect.

(a) If the designated representative of the unit under an approved early election plan fails to demonstrate compliance with the applicable emissions limitation under rule 3745-103-57 of the Administrative Code for any year during the period beginning January first of the first year the early election plan takes effect and ending December 31, 2007, the director shall terminate the plan. The termination will take effect beginning January first of the year after the year for which there is a failure to demonstrate compliance. The designated representative may not submit a new early election plan.

(b) The designated representative of the unit under an approved early election plan may terminate the plan any year prior to 2008 but may not submit a new early election plan. In order to terminate the plan, the designated representative must submit a notice under paragraph (C) of rule 3745-103-09 of the Administrative Code by January first of the year for which the termination is to take effect.

(i) If an early election plan is terminated any year prior to 2000, the unit shall meet, beginning January 1, 2000, the applicable emissions limitation for NO_x for phase II units with group one boilers under rule 3745-103-59 of the Administrative Code.

(ii) If an early election plan is terminated in or after 2000, the unit shall meet, beginning on the effective date of the termination, the applicable emissions limitation for NO_x for phase II units with group one boilers under rule 3745-103-59 of the Administrative Code.

Effective: 11/10/2011

R.C. 119.032 review dates: 08/24/2011 and 08/24/2016

CERTIFIED ELECTRONICALLY
Certification

10/31/2011
Date

Promulgated Under: 119.03
Statutory Authority: 3704.03(E)
Rule Amplifies: 3704.03(A), 3704.03(E)
Prior Effective Dates: 6/27/02, 1/12/07

3745-103-61 **Permit application and compliance plans.**

(A) Duty to apply.

(1) The designated representative of any source with an affected unit subject to this rule shall submit, by the applicable deadline under paragraph (B) of this rule, a complete acid rain permit application (or, if the unit is covered by an acid rain permit, a complete permit revision) that includes a complete compliance plan for NO_x emissions covering the unit.

(2) The original and three copies of the permit application and compliance plan for NO_x emissions for phase II shall be submitted to the director, and one copy of the compliance plan for NO_x emissions submitted to USEPA headquarters, acid rain division.

(B) Deadlines. For a phase I or phase II unit with a group one or group two boiler, the designated representative shall have submitted a complete permit application and compliance plan for NO_x emissions covering the unit in phase II to the director and USEPA not later than January 1, 1998, except that early election units shall also submit an application to USEPA not later than January 1, 1997.

(C) Information requirements for NO_x compliance plans. A complete compliance plan for NO_x shall, for each affected unit included in the permit application and subject to this rule, either certify that the unit will comply with the applicable emissions limitation under rule 3745-103-57, 3745-103-58, or 3745-103-59 of the Administrative Code or specify one or more other acid rain compliance options for NO_x in accordance with the requirements of this rule. A complete compliance plan for NO_x for a source shall include the following elements in a format prescribed by the director:

(1) Identification of the source;

(2) Identification of each affected unit that is at the source and is subject to this rule;

(3) Identification of the boiler type of each unit;

(4) Identification of the compliance option proposed for each unit (i.e., meeting the applicable emissions limitation under rule 3745-103-57 (NO_x emission limitation for group one, phase I boilers); 3745-103-58 (NO_x emission limitation for group two boilers); or 3745-103-59 (NO_x emission limitation for group one, phase II boilers); 3745-103-60 (early election); 3745-103-62 (alternative emission limitation); or 3745-103-63 (NO_x emissions averaging) of the Administrative Code; and any additional information required for the appropriate option in accordance with this rule;

(5) Reference to the standard requirements in rule 3745-103-05 of the Administrative Code; and

(6) The requirement of paragraph (A) of rule 3745-103-06 of the Administrative Code.

(D) Duty to reapply. The designated representative of any source with an affected unit subject to this rule shall submit a complete acid rain permit application, including a complete compliance plan for NO_x emissions covering the unit, in accordance with the deadlines in paragraph (A)(1) of rule 3745-103-07 of the Administrative Code.

R.C. 119.032 review dates: 08/24/2011 and 08/24/2016

CERTIFIED ELECTRONICALLY
Certification

08/24/2011
Date

Promulgated Under: 119.03
Statutory Authority: 3704.03(E)
Rule Amplifies: 3704.03(A), 3704.03(E)
Prior Effective Dates: 6/27/02, 1/12/07

3745-103-62 **Alternative emission limitations.**

[Comment: For dates of non-regulatory government publications, publications of recognized organizations and associations, federal rules, and federal statutory provisions referenced in this rule, see paragraph (C) of rule 3745-103-01 of the Administrative Code titled "Referenced materials."]

(A) General provisions.

(1) The designated representative of an affected unit that is not an early election unit pursuant to rule 3745-103-60 of the Administrative Code and cannot meet the applicable emission limitation in rule 3745-103-57, 3745-103-58, or 3745-103-59 of the Administrative Code using, for group one boilers, either low NO_x burner technology or an alternative technology in accordance with paragraph (E)(11) of this rule, or, for tangentially fired boilers, separated overfire air, or, for group two boilers, the technology on which the applicable emission limitation is based may petition the permitting authority for an alternative emission limitation less stringent than the applicable emission limitation.

(2) In order for the unit to qualify for an alternative emission limitation, the designated representative shall demonstrate that the affected unit cannot meet the applicable emission limitation in rule 3745-103-57, 3745-103-58, or 3745-103-59 of the Administrative Code based on a showing, to the satisfaction of the director and the USEPA that:

(a) For a tangentially fired boiler, the owner or operator has either properly installed low NO_x burner technology or properly installed separated overfire air; or

(b) For a dry bottom wall-fired boiler (other than a unit applying cell burner technology), the owner or operator has properly installed low NO_x burner technology; or

(c) For a group one boiler, the owner or operator has properly installed an alternative technology (including but not limited to reburning, selective noncatalytic reduction, or selective catalytic reduction) that achieves NO_x emission reductions demonstrated in accordance with paragraph (E)(11) of this rule; or

(d) For a group two boiler, the owner or operator has properly installed the appropriate NO_x emission control technology on which the applicable emission limitation in rule 3745-103-58 of the Administrative Code is based; and

(i) The installed NO_x emission control system has been designed to meet the applicable emission limitation in rule 3745-103-57, 3745-103-58, or 3745-103-59 of the Administrative Code; and

(ii) For a demonstration period of at least fifteen months or other period of time, as provided in paragraph (F)(1) of this rule:

(a) The NO_x emission control system has been properly installed and properly operated according to specifications and procedures designed to minimize the emissions of NO_x to the atmosphere;

(b) Unit operating data as specified in this rule show that the unit and NO_x emission control system were operated in accordance with the bid and design specifications on which the design of the NO_x emission control system was based; and

(c) Unit operating data as specified in this rule, continuous emission monitoring data obtained pursuant to 40 CFR Part 75, and the test data specific to the NO_x emission control system show that the unit could not meet the applicable emission limitation in rule 3745-103-57, 3745-103-58, or 3745-103-59 of the Administrative Code.

(B) Petitioning process. The petitioning process for an alternative emission limitation shall consist of the following steps:

(1) Operation during a period of at least three months, following the installation of the NO_x emission control system, that shows that the specific unit and the NO_x emission control system was unable to meet the applicable emissions limitation under rule 3745-103-57, 3745-103-58, or 3745-103-59 of the Administrative Code and was operated in accordance with the operating conditions upon which the design of the NO_x emission control system was based and with vendor specifications and procedures;

(2) Submission of a petition for an alternative emission limitation demonstration period as specified in paragraph (D) of this rule;

(3) Operation during a demonstration period of at least fifteen months, or other period of time as provided in paragraph (F)(1) of this rule, that demonstrates the inability of the specific unit to meet the applicable emissions limitation under rule 3745-103-57, 3745-103-58, or 3745-103-59 of the Administrative Code and the minimum NO_x emissions rate that the specific unit can achieve during long-term load dispatch operation; and

(4) Submission of a petition for a final alternative emission limitation as specified in paragraph (E) of this rule.

(C) Deadlines.

(1) Petition for an alternative emission limitation demonstration period. The designated representative of the unit shall submit a petition for an alternative emission limitation demonstration period to the director after the unit has been operated for at least three months after installation of the NO_x emission control system required under paragraph (A)(2) of this rule and by the deadline of one hundred twenty days after January first of the first calendar year for which the demonstration period is sought to apply, or one hundred twenty days after startup of the NO_x emission control system if the unit is not operating at the beginning of that calendar year.

(2) Petition for a final alternative emission limitation. Not later than ninety days after the end of an approved alternative emission limitation demonstration period for the unit, the designated representative of the unit may submit a petition for an alternative emission limitation to the director.

(3) Renewal of an alternative emission limitation. In order to request continuation of an alternative emission limitation, the designated representative must submit a petition to renew the alternative emission limitation on the date that the application for renewal of the sources acid rain permit containing the alternative emission limitation is due.

(D) Contents of petition for an alternative emission limitation demonstration period. The designated representative of an affected unit that has met the minimum criteria under paragraph (A) of this rule and that has been operated for a period of at least three months following the installation of the required NO_x emission control system may submit to the director a petition for an alternative emission limitation demonstration period. In the petition, the designated representative shall provide the following information in a format prescribed by the director and the USEPA:

(1) Identification of the unit;

(2) The type of NO_x control technology installed (e.g., low NO_x burner technology, selective noncatalytic reduction, selective catalytic reduction, reburning);

(3) If an alternative technology is installed, the time period (not less than six consecutive months) prior to installation of the technology to be used for the demonstration required in paragraph (E)(11) of this rule;

(4) Documentation as set forth in paragraph (A)(1) of rule 3745-103-65 of the Administrative Code showing that the installed NO_x emission control system has been designed to meet the applicable emission limitation in rule 3745-103-57, 3745-103-58, or 3745-103-59 of the Administrative Code and that the system has been properly installed according to procedures and specifications designed to minimize the emissions of NO_x to the atmosphere;

(5) The date the unit commenced operation following the installation of the NO_x emission control system or the date the specific unit became subject to the emission limitations of rule 3745-103-57, 3745-103-58, or 3745-103-59 of the Administrative Code, whichever is later;

(6) The dates of the operating period (which must be at least three months long);

(7) Certification by the designated representative that the owner(s) or operator operated the unit and the NO_x emission control system during the operating period in accordance with: specifications and procedures designed to achieve the maximum NO_x reduction possible with the installed NO_x emission control system or the applicable emission limitation in rule 3745-103-57, 3745-103-58, or 3745-103-59 of the Administrative Code; the operating conditions upon which the design of the NO_x emission control system was based; and vendor specifications and procedures;

(8) A brief statement describing the reason(s) why the unit cannot achieve the applicable emission limitation of rule 3745-103-56, 3745-103-57, or 3745-103-58 of the Administrative Code;

(9) A demonstration period plan, as set forth in paragraph (A)(2) of rule 3745-103-65 of the Administrative Code;

(10) Unit operating data and quality-assured continuous emission monitoring data (including the specific data items listed in paragraph (A)(3) of rule 3745-103-65 of the Administrative Code collected in accordance with 40 CFR Part 75 during the operating period) and demonstrating the inability of the specific unit to meet the applicable emission limitation in rule 3745-103-57, 3745-103-58, or 3745-103-59 of the Administrative Code on an annual average basis while operating as certified under paragraph (D)(7) of this rule;

(11) An interim alternative emission limitation, in pound per MMBtu, that the unit can achieve during a demonstration period of at least fifteen months. The interim alternative emission limitation shall be derived from the data specified in paragraph (D)(10) of this rule using methods and procedures satisfactory to USEPA;

(12) The proposed dates of the demonstration period (which must be at least fifteen months long);

(13) A report that outlines the testing and procedures to be used during the demonstration period in order to determine the maximum NO_x emission reduction obtainable with the installed system. The report shall include the reasons for the NO_x emission control system's failure to meet the applicable emission limitation, and the tests and procedures that will be followed to

optimize the NO_x emission control system's performance. Such tests and procedures may include those identified in rule 3745-103-66 of the Administrative Code as appropriate.

(14) The special provisions at paragraph (G)(1) of this rule.

(E) Contents of petition for a final alternative emission limitation. After the approved demonstration period, the designated representative of the unit may petition the director and the USEPA for an alternative emission limitation. The petition shall include the following elements in a format prescribed by the director and the USEPA:

(1) Identification of the unit;

(2) Certification that the owner(s) or operator operated the affected unit and the NO_x emission control system during the demonstration period in accordance with: specifications and procedures designed to achieve the maximum NO_x reduction possible with the installed NO_x emission control system or the applicable emissions limitation in rule 3745-103-57, 3745-103-58, or 3745-103-59 of the Administrative Code; the operating conditions (including load dispatch conditions) upon which the design of the NO_x emission control system was based; and vendor specifications and procedures;

(3) Certification that the owner(s) or operator have installed in the affected unit all NO_x emission control systems, made any operational modifications, and completed any planned upgrades and/or maintenance to equipment specified in the approved demonstration period plan for optimizing NO_x emission reduction performance, consistent with the demonstration period plan and the proper operation of the installed NO_x emission control system. Such certification shall explain any differences between the installed NO_x emission control system and the equipment configuration described in the approved demonstration period plan;

(4) A clear description of each step taken or modification made during the demonstration period to improve or optimize the performance of the installed NO_x emission control system;

(5) Engineering design calculations and drawings that show the technical specifications for installation of any additional operational or emission control modifications installed during the demonstration period;

(6) Unit operating and quality-assured continuous emission monitoring data (including the specific data listed in paragraph (B) of rule 3745-103-65 of the Administrative Code) collected in accordance with 40 CFR Part 75 during the demonstration period and demonstrating the inability of the specific unit to meet the applicable emission limitation in rule 3745-103-57, 3745-103-58, or 3745-

103-59 of the Administrative Code on an annual average basis while operating in accordance with the certification under paragraph (E)(2) of this rule;

(7) A report (based on the parametric test requirements set forth in the approved demonstration period plan as identified in paragraph (D)(13) of this rule) that demonstrates the unit was operated in accordance with the operating conditions upon which the design of the NO_x emission control system was based and describes the reason(s) for the failure of the installed NO_x emission control system to meet the applicable emission limitation in rule 3745-103-57, 3745-103-58, or 3745-103-59 of the Administrative Code on an annual average basis;

(8) The minimum NO_x emission rate, in pound per MMBtu, that the affected unit can achieve on an annual average basis with the installed NO_x emission control system. This value, which shall be the requested alternative emission limitation, shall be derived from the data specified in this rule using methods and procedures satisfactory to USEPA and shall be the lowest annual emission rate the unit can achieve with the installed NO_x emission control system;

(9) All supporting data and calculations documenting the determination of the requested alternative emission limitation and its conformance with the methods and procedures satisfactory to the director and the USEPA;

(10) The special provisions in paragraph (G)(2) of this rule; and

(11) In addition to the other requirements of this rule, the owner or operator of an affected unit with a group one boiler that has installed an alternative technology in addition to or in lieu of low NO_x burner technology and cannot meet the applicable emission limitation in rule 3745-103-57 of the Administrative Code shall demonstrate, to the satisfaction of the director and the USEPA, that the actual percentage reduction in NO_x emissions (pound per MMBtu), on an annual average basis is greater than sixty-five per cent of the average annual NO_x emissions prior to the installation of the NO_x emission control system. The percentage reduction in NO_x emissions shall be determined using continuous emissions monitoring data for NO_x taken during the time period (under paragraph (D)(3) of this rule) prior to the installation of the NO_x emission control system and during long-term load dispatch operation of the specific boiler.

(F) Ohio EPAs action.

(1) Alternative emission limitation demonstration period.

(a) The director may approve an alternative emission limitation demonstration period and demonstration period plan, provided that the requirements of this rule are met to the satisfaction of the director. The director shall disapprove

a demonstration period if the requirements of paragraph (A) of this rule were not met during the operating period.

(b) The demonstration period as approved by the director will include, as part of the demonstration period, the four month period prior to submission of the alternative emission limitation application in the demonstration period.

(c) The alternative emission limitation demonstration period will authorize the affected unit to emit at a rate not greater than the interim alternative emission limitation during the demonstration period on or after the applicable date established in rule 3745-103-58 or 3745-103-59 of the Administrative Code and until the date that the director and the USEPA approve or deny a final alternative emission limitation.

(d) If the designated representative petitions for an extension of an approved alternative emission limitation demonstration period in accordance with paragraph (G)(1)(b) of this rule, the director may extend the demonstration period by administrative amendment to the acid rain permit under rule 3745-103-18 of the Administrative Code.

(e) The director shall deny the demonstration period if the designated representative cannot demonstrate that the unit met the requirements of paragraph (A)(2) of this rule. In such cases, the director shall require that the owner or operator operate the unit in compliance with the applicable emission limitation in rule 3745-103-57, 3745-103-58, or 3745-103-59 of the Administrative Code for the period preceding the submission of the application for an alternative emission limitation demonstration period, including the operating period, if such periods are after the date on which the unit is subject to the standard limit under rule 3745-103-57, 3745-103-58, or 3745-103-59 of the Administrative Code.

(2) Alternative emission limitation.

(a) If the director and the USEPA determine that the requirements in this rule are met, the director and the USEPA shall approve an alternative emission limitation and the director shall issue or revise an acid rain permit to apply the approved limitation, in accordance with rule 3745-103-13 of the Administrative Code. The permit will authorize the unit to emit at a rate not greater than the approved alternative emission limitation, beginning on the effective date the director revises the applicable acid rain permit to approve the alternative emission limitation.

(b) If Ohio EPA or the USEPA disapproves an alternative emission limitation under paragraph (A)(2) of this rule, the owner or operator shall operate the affected unit in compliance with the applicable emission limitation in rule 3745-103-57, 3745-103-58, or 3745-103-59 of the Administrative Code

(unless the unit is participating in an approved averaging plan under rule 3745-103-63 of the Administrative Code) beginning on the date the director revises an acid rain permit to disapprove an alternative emission limitation.

(3) Alternative emission limitation renewal.

(a) If, upon review of a petition to renew an approved alternative emission limitation, the director determines that no changes have been made to the control technology, its operation, the operating conditions on which the alternative emission limitation was based, or the actual NO_x emission rate, the alternative emission limitation shall be renewed.

(b) If the director determines that changes have been made to either the control technology, its operation, the fuel quality, or the operating conditions on which the alternative emission limitation was based, the designated representative shall submit, in order to renew the alternative emission limitation or to obtain a new alternative emission limitation, a petition for an alternative emission limitation demonstration period that meets the requirements of paragraph (D) of this rule using a new demonstration period, and the director shall approve or deny the petition in accordance with paragraph (F) of this rule.

(G) Special provisions.

(1) Alternative emission limitation demonstration period.

(a) Emission limitations.

(i) Each unit with an approved alternative emission limitation demonstration period shall comply with the interim emission limitation specified in the unit's permit beginning on the effective date of the demonstration period specified in the permit and, if a timely petition for a final alternative emission limitation is submitted, extending until the date on which the director issues or revises an acid rain permit to approve or disapprove an alternative emission limitation. If a timely petition is not submitted, then the unit shall comply with the standard emission limit under rule 3745-103-57, 3745-103-58, or 3745-103-59 of the Administrative Code beginning on the date the petition was required to be submitted under paragraph (C)(2) of this rule.

(ii) During the demonstration period, when the owner or operator identifies, boiler operating or NO_x emission control system modifications or upgrades that would produce further NO_x emission reductions, enabling the affected unit to comply with or bring its emission rate closer to the applicable emissions limitation under rule 3745-103-57, 3745-103-58, or 3745-103-59 of the Administrative Code, the designated

representative may submit a request and the director may grant, an extension of the demonstration period for such period of time (not to exceed twelve months) as may be necessary to implement such modifications or upgrades, by administrative amendment under rule 3745-103-18 of the Administrative Code.

(iii) If the approved interim alternative emission limitation applies to a unit for part, but not all, of a calendar year, the unit shall determine compliance for the calendar year in accordance with the procedures in 40 CFR 76.13(a).

(b) Operating requirements.

(i) A unit with an approved alternative emission limitation demonstration period shall be operated under load dispatch conditions consistent with the operating conditions upon which the design of the NO_x emission control system and performance guarantee were based, and in accordance with the demonstration period plan.

(ii) A unit with an approved alternative emission limitation demonstration period shall install all NO_x emission control systems, make any operational modifications, and complete any upgrades and maintenance to equipment specified in the approved demonstration period plan for optimizing NO_x emission reduction performance.

(iii) When the owner or operator identifies boiler or NO_x emission control system operating modifications that would produce higher NO_x emission reductions, enabling the affected unit to comply with, or bring its emission rate closer to, the applicable emission limitation under rule 3745-103-57, 3745-103-58 or 3745-103-59 of the Administrative Code, the designated representative shall submit an administrative amendment under rule 3745-103-18 of the Administrative Code to revise the unit's acid rain permit and demonstration period plan to include such modifications.

(c) Testing requirements. A unit with an approved alternative emission limitation demonstration period shall monitor in accordance with 40 CFR Part 75 and shall conduct all tests required under the approved demonstration period plan.

(2) Final alternative emission limitation.

(a) Emission limitations.

(i) Each unit with an approved alternative emission limitation shall comply with the alternative emission limitation specified in the unit's permit

beginning on the date specified in the permit as issued or revised by the director to apply the final alternative emission limitation.

(ii) If the approved interim or final alternative emission limitation applies to a unit for part, but not all, of a calendar year, the unit shall determine compliance for the calendar year in accordance with the procedures in 40 CFR 76.13(a).

Effective: 11/10/2011

R.C. 119.032 review dates: 08/24/2011 and 08/24/2016

CERTIFIED ELECTRONICALLY
Certification

10/31/2011
Date

Promulgated Under: 119.03
Statutory Authority: 3704.03(E)
Rule Amplifies: 3704.03(A), 3704.03(E)
Prior Effective Dates: 6/27/02, 1/12/07

3745-103-63 **Emissions averaging.**

[Comment: For dates of non-regulatory government publications, publications of recognized organizations and associations, federal rules, and federal statutory provisions referenced in this rule, see paragraph (C) of rule 3745-103-01 of the Administrative Code titled "Referenced materials."]

(A) General provisions. In lieu of complying with the applicable emission limitation in rule 3745-103-57, 3745-103-58, or 3745-103-59 of the Administrative Code, any affected units subject to such emission limitation, under control of the same owner or operator, and having the same designated representative may average their NO_x emissions under an averaging plan approved under this rule.

(1) Each affected unit included in an averaging plan for phase II shall be a boiler subject to an emission limitation in rule 3745-103-57, 3745-103-58, or 3745-103-59 of the Administrative Code for all years for which the unit is included in the plan.

(2) Each unit included in an averaging plan shall have an alternative contemporaneous annual emission limitation (pound per MMBtu) and can only be included in one averaging plan.

(3) Each unit included in an averaging plan shall have a minimum allowable annual heat input value (MMBtu), if it has an alternative contemporaneous annual emission limitation more stringent than that unit's applicable emission limitation under rule 3745-103-57, 3745-103-58, or 3745-103-59 of the Administrative Code, and a maximum allowable annual heat input value, if it has an alternative contemporaneous annual emission limitation less stringent than that unit's applicable emission limitation under rule 3745-103-57, 3745-103-58, or 3745-103-59 of the Administrative Code.

(4) The Btu-weighted annual average emission rate for the units in an averaging plan shall be less than or equal to the Btu-weighted annual average emission rate for the same units had they each been operated, during the same period of time, in compliance with the applicable emission limitations in rule 3745-103-57, 3745-103-58, or 3745-103-59 of the Administrative Code.

(5) In order to demonstrate that the proposed plan is consistent with paragraph (A)(4) of this rule, the alternative contemporaneous annual emission limitations and annual heat input values assigned to the units in the proposed averaging plan shall meet the following requirement:

$$\frac{\sum_{i=1}^{n}(R_{Li} \times HI_i)}{\sum_{i=1}^{n} HI_i} \leq \frac{\sum_{i=1}^{n}(R_{li} \times HI_i)}{\sum_{i=1}^{n} HI_i} \qquad \text{(Equation 1)}$$

where:

R_{Li} = alternative contemporaneous annual emission limitation for unit i, in pound per MMBtu, as specified in the averaging plan;

R_{li} = applicable emission limitation for unit i, in pound per MMBtu, as specified in rule 3745-103-57, 3745-103-58, or 3745-103-59 of the Administrative Code except that for early election units, which may be included in an averaging plan only on or after January 1, 2000, R_{li} shall equal the most stringent applicable emission limitation under rule 3745-103-57 or 3745-103-59 of the Administrative Code;

HI_i = annual heat input for unit i, in MMBtu, as specified in the averaging plan;

n = number of units in the averaging plan.

(6) For units with an alternative emission limitation, R_{Li} shall equal the applicable emissions limitation under rule 3745-103-57, 3745-103-58, or 3745-103-59 of the Administrative Code, not the alternative emissions limitation.

(7) No unit may be included in more than one averaging plan.

(B) Submission requirements.

(1) The designated representative of a unit meeting the requirements of paragraphs (A)(1) and (A)(7) of this rule may submit an averaging plan (or a revision to an approved averaging plan) to the director and any other applicable permitting authority(ies) at any time up to and including January first (or July first, if the plan is restricted to only units located within Ohio EPA's jurisdiction) of the calendar year for which the averaging plan is to become effective.

(2) The designated representative shall submit a copy of the same averaging plan (or the same revision to an approved averaging plan) to any other permitting authority with jurisdiction over a unit in the plan, and to USEPA.

(3) When an averaging plan (or a revision to an approved averaging plan) is not approved, the owner or operator of each unit in the plan shall operate the unit in compliance with the emission limitation that would apply in the absence of the averaging plan (or revision to a plan).

(C) Contents of NO_x averaging plan. A complete NO_x averaging plan shall include the following elements in a format prescribed by the director and the USEPA:

(1) Identification of each unit in the plan;

(2) Each unit's applicable emission limitation as determined by rule 3745-103-04, 3745-103-05, or 3745-103-06 of the Administrative Code;

(3) The alternative contemporaneous annual emission limitation for each unit (in pound per MMBtu). If any of the units identified in the NO_x averaging plan utilize a common stack pursuant to 40 CFR 75.17(a)(2)(i)(b), the same alternative contemporaneous emission limitation shall be assigned to each such unit but different heat input limits may be assigned;

(4) The annual heat input limit for each unit (in MMBtu);

(5) The calculation for equation 1 in paragraph (A)(5) of this rule;

(6) The calendar years for which the plan will be in effect; and

(7) The special provisions pursuant to paragraph (D)(1) of this rule.

(D) Special provisions.

(1) Emission limitations. Each affected unit in an approved averaging plan is in compliance with the acid rain emission limitation for NO_x under the plan only if the following requirements are met:

(a) For each unit, the unit's actual annual average emission rate for the calendar year, in pound per MMBtu, is less than or equal to its alternative contemporaneous annual emission limitation in the averaging plan; and

(i) For each unit with an alternative contemporaneous emission limitation less stringent than the applicable emission limitation in rule 3745-103-57, 3745-103-58, or 3745-103-59 of the Administrative Code, the actual annual heat input for the calendar year does not exceed the annual heat input limit in the averaging plan;

(ii) For each unit with an alternative contemporaneous annual emission limitation more stringent than the applicable emission limitation in rule 3745-103-57, 3745-103-58, or 3745-103-59 of the Administrative

Code, the actual annual heat input for the calendar year is not less than the annual heat input limit in the averaging plan; or

(b) If one or more of the units does not meet the requirements under paragraph (D)(1)(a)(i) of this rule, the designated representative shall demonstrate, in accordance with paragraph (D)(1)(b)(i) of this rule (equation 2) that the actual Btu-weighted annual average emission rate for the units in the plan is less than or equal to the Btu-weighted annual average rate for the same units had they each been operated, during the same period of time, in compliance with the applicable emission limitations in rule 3745-103-57, 3745-103-58, or 3745-104-59 of the Administrative Code.

(i) A group showing of compliance shall be made based on the following equation:

$$\frac{\sum_{i=1}^{n} (R_{ai} \times HI_{ai})}{\sum_{i=1}^{n} HI_{ai}} \leq \frac{\sum_{i=1}^{n} (R_{li} \times HI_{ai})}{\sum_{i=1}^{n} HI_{ai}} \qquad \text{(Equation 2)}$$

where,

R_{ai} = actual annual average emission rate for unit i, in pound per MMBtu, as determined using the procedures in 40 CFR Part 75. For units in an averaging plan utilizing a common stack pursuant to 40 CFR 75.17(a)(2)(i)(B), use the same NO_x emission rate value for each unit utilizing the common stack, and calculate this value in accordance with appendix F of 40 CFR Part 75;

R_{li} = applicable annual emission limitation for unit i, in pound per MMBtu, as specified in rule 3745-103-57, 3745-103-58, or 3745-103-59 of the Administrative Code, except that for early election units, which may be included in an averaging plan only on or after January 1, 2000, R_{li} shall equal the most stringent applicable emission limitation under rule 3745-103-04 or 3745-103-06 of the Administrative Code;

HI_{ai} = actual annual heat input for unit i, in MMBtu, as determined using the procedures in 40 CFR Part 75;

n = number of units in the averaging plan.

(ii) For units with an alternative emission limitation, R_{li} shall equal the applicable emission limitation under rule 3745-103-57, 3745-103-58, or 3745-103-59 of the Administrative Code, not the alternative emission limitation.

(c) If there is a successful group showing of compliance under paragraph (D)(1)(b)(i) of this rule for a calendar year, then all units in the averaging plan shall be deemed to be in compliance for that year with their alternative contemporaneous emission limitations and annual heat input limits under paragraph (D)(1)(a) of this rule.

(2) Liability. The owners and operators of a unit governed by an approved averaging plan shall be liable for any violation of the plan or this rule at that unit or any other unit in the plan, including liability for fulfilling the obligations specified in 40 CFR Part 77 and sections 113 and 411 of the Clean Air Act.

(3) Withdrawal or termination. The designated representative may submit a notification to terminate an approved averaging plan in accordance with paragraph (C) of rule 3745-103-09 of the Administrative Code, no later than October first of the calendar year for which the plan is to be withdrawn or terminated.

Effective: 11/10/2011

R.C. 119.032 review dates: 08/24/2011 and 08/24/2016

CERTIFIED ELECTRONICALLY
Certification

10/31/2011
Date

Promulgated Under: 119.03
Statutory Authority: 3704.03(E)
Rule Amplifies: 3704.03(A), 3704.03(E)
Prior Effective Dates: 6/27/02, 1/12/07

Rule 3745-103-64 has been rescinded as of January 12, 2007

3745-103-65 **Monitoring, recordkeeping, and reporting.**

[Comment: For dates of non-regulatory government publications, publications of recognized organizations and associations, federal rules, and federal statutory provisions referenced in this rule, see paragraph (C) of rule 3745-103-01 of the Administrative Code titled "Referenced materials."]

(A) A petition for an alternative emission limitation demonstration period under paragraph (D) of rule 3745-103-62 of the Administrative Code shall include the following information:

(1) In accordance with paragraph (D)(4) of rule 3745-103-62 of the Administrative Code, the following information:

(a) Documentation that the owner or operator solicited bids for a NO_x emission control system designed for application to the specific boiler and designed to achieve the applicable emission limitation in rule 3745-103-57, 3745-103-58, or 3745-103-59 of the Administrative Code on an annual average basis. This documentation must include a copy of all bid specifications;

(b) A copy of the performance guarantee submitted by the vendor of the installed NO_x emission control system to the owner or operator showing that such system was designed to meet the applicable emission limitation in rule 3745-103-57, 3745-103-58, or 3745-103-59 of the Administrative Code on an annual average basis;

(c) Documentation describing the operational and combustion conditions that are the basis of the performance guarantee;

(d) Certification by the primary vendor of the NO_x emission control system that such equipment and associated auxiliary equipment was properly installed according to the modifications and procedures specified by the vendor; and

(e) Certification by the designated representative that the owner(s) or operator installed technology that meets the requirements of paragraph (A)(2) of rule 3745-103-62 of the Administrative Code.

(2) In accordance with paragraph (D)(9) of rule 3745-103-62 of the Administrative Code, the following information:

(a) The operating conditions of the NO_x emission control system including load range, oxygen range, coal volatile matter range, and, for tangentially fired boilers, distribution of combustion air within the NO_x emission control system;

(b) Certification by the designated representative that the owner(s) or operator have achieved and are following the operating conditions, boiler modifications, and upgrades that formed the basis for the system design and performance guarantee;

(c) Any planned equipment modifications and upgrades for the purpose of achieving the maximum NO_x reduction performance of the NO_x emission control system that were not included in the design specifications and performance guarantee, but that were achieved prior to submission of this application and are being followed;

(d) A list of any modifications or replacements of equipment that are to be done prior to the completion of the demonstration period for the purpose of reducing emissions of NO_x; and

(e) The parametric testing that will be conducted to determine the reason or reasons if the unit fails to achieve the applicable emission limitation and to verify the proper operation of the installed NO_x emission control system during the demonstration period. The tests shall include tests in rule 3745-103-66 of the Administrative Code, which may be modified as follows:

(i) The owner or operator of the unit may add tests to those listed in rule 3745-103-66 of the Administrative Code, if such additions provide data relevant to the failure of the installed NO_x emission control system to meet the applicable emissions limitation in rule 3745-103-57, 3745-103-58, or 3745-103-59 of the Administrative Code; or

(ii) The owner or operator of the unit may remove tests listed in rule 3745-103-66 of the Administrative Code that are shown, to the satisfaction of the director, not to be relevant to NO_x emissions from the affected unit; and

(iii) In the event the performance guarantee or the NO_x emission control system specifications require additional tests not listed in rule 3745-103-66 of the Administrative Code, or specify operating conditions not verified by tests listed in rule 3745-103-66 of the Administrative Code, the owner or operator of the unit shall include such additional tests.

(3) In accordance with paragraph (D)(10) of rule 3745-103-62 of the Administrative Code, the following information for the operating period:

(a) The average NO_x emission rate (in pound per MMBtu) of the specific unit;

(b) The highest hourly NO_x emission rate (in pound per MMBtu) of the specific unit;

(c) Hourly NO_x emission rate (in pound per MMBtu), calculated in accordance with 40 CFR Part 75;

(d) Total heat input (in MMBtu) for the unit for each hour of operation, calculated in accordance with the requirements of 40 CFR Part 75; and

(e) Total integrated hourly unit load (in MWe-hrs), on a gross basis.

(B) A petition for an alternative emission limitation shall include the following information in accordance with paragraph (E)(6) of rule 3745-103-62 of the Administrative Code.

(1) Total heat input (in MMBtu) for the unit for each hour of operation, calculated in accordance with the requirements of 40 CFR Part 75;

(2) Hourly NO_x emission rate (in pound per MMBtu), calculated in accordance with the requirements of 40 CFR Part 75; and

(3) Total integrated hourly unit load (in MWe-hrs), on a gross basis.

Effective: 11/10/2011

R.C. 119.032 review dates: 08/24/2011 and 08/24/2016

CERTIFIED ELECTRONICALLY
Certification

10/31/2011
Date

Promulgated Under: 119.03
Statutory Authority: 3704.03(E)
Rule Amplifies: 3704.03(A), 3704.03(E)
Prior Effective Dates: 6/27/02, 1/12/07

3745-103-66 **Test methods and procedures.**

[Comment: For dates of non-regulatory government publications, publications of recognized organizations and associations, federal rules, and federal statutory provisions referenced in this rule, see paragraph (C) of rule 3745-103-01 of the Administrative Code titled "Referenced materials."]

(A) The owner or operator may use the following tests as a basis for the report required by paragraph (E)(7) of rule 3745-103-62 of the Administrative Code:

(1) An ultimate analysis of coal using ASTM D3176-89, "Standard Practice for Ultimate Analysis of Coal and Coke;"

(2) A proximate analysis of coal using ASTM D3172-89, "Standard Practice for Proximate Analysis of Coal and Coke;" and

(3) Measure the coal mass flow rate to each individual burner using ASME performance test code 4.2, "Test Code for Coal Pulverizers"or ISO 9931, "Coal - Sampling of Pulverized Coal Conveyed by Gases in Direct Fired Coal Systems."

(B) The owner or operator may measure and record the actual NO_x emission rate in accordance with the requirements of this part while varying the following parameters where possible to determine their effects on the emissions of NO_x from the affected boiler:

(1) Excess air levels;

(2) Settings of burners or coal and air nozzles, including tilt and yaw, or swirl;

(3) For tangentially fired boilers, distribution of combustion air within the NO_x emission control system;

(4) Coal mass flow rates to each individual burner;

(5) Coal-to-primary air ratio (based on pound per hour) for each burner, the average coal-to-primary air ratio for all burners, and the deviations of individual burners' coal-to-primary air ratios from the average value; and

(6) If the boiler uses varying types of coal, the type of coal. Provide the results of proximate and ultimate analyses of each type of as-fired coal.

(C) In performing the tests specified in paragraph (A) of this rule, the owner or operator shall begin the tests using the equipment settings for which the NO_x emission control system was designed to meet the NO_x emission rate guaranteed by the primary NO_x

emission control system vendor. These results constitute the baseline controlled condition.

(D) After establishing the baseline controlled condition under paragraph (C) of this rule, the owner or operator may:

(1) Change excess air levels plus or minus five per cent from the baseline controlled condition to determine the effects on emissions of NO_x, by providing a minimum of three readings (e.g., with a baseline reading of twenty per cent excess air, excess air levels may be changed to nineteen per cent and twenty-one per cent);

(2) For tangentially fired boilers, change the distribution of combustion air within the NO_x emission control system to determine the effects on NO_x emissions by providing a minimum of three readings, one with the minimum, one with the baseline, and one with the maximum amounts of staged combustion air; and

(3) Show that the combustion process within the boiler is optimized (e.g., that the burners are balanced).

Effective: 11/10/2011

R.C. 119.032 review dates: 08/24/2011 and 08/24/2016

CERTIFIED ELECTRONICALLY
Certification

10/31/2011
Date

Promulgated Under: 119.03
Statutory Authority: 3704.03(E)
Rule Amplifies: 3704.03(A), 3704.03(E)
Prior Effective Dates: 6/27/02, 1/12/07

Rule 3745-103-67 has been rescinded as of January 12, 2007.

Chapter 3745-104: Accidental Releases Prevention Program

Contact: Sherri Swihart 614-644-3594
Sherri.swihart@epa.ohio.gov

3745-104-01 **Definitions.**

[Comment: For dates of non-regulatory government publications, publications of recognized organizations and associations, federal rules, and federal statutory provisions referenced in this rule, see the "Referenced Materials" paragraph at the end of this rule.]

(A) Except as otherwise provided in this rule, the definitions in rule 3745-15-01 of the Administrative Code shall apply to this chapter.

(B) As used in Chapter 3745-104 of the Administrative Code:

(1) "Accidental release" means an unanticipated emission of a regulated substance into the ambient air from a stationary source.

(2) "Administrative controls" means written procedural mechanisms used for hazard control.

(3) "AIChE/CCPS" means the American institute of chemical engineers/center for chemical process safety.

(4) "API" means the American petroleum institute.

(5) "Article" means a manufactured item, as defined under 29 CFR 1910.1200(b), that is formed to a specific shape or design during manufacture, that has end use functions dependent in whole or in part upon the shape or design during end use, and that does not release or otherwise result in exposure to a regulated substance under normal conditions of processing and use.

(6) "ASME" means the American society of mechanical engineers.

(7) "CAS" means the chemical abstracts service.

(8) "Catastrophic release" means a major uncontrolled emission, fire, or explosion, involving one or more regulated substances that presents imminent and substantial endangerment to public health and the environment.

(9) "Clean Air Act Amendments" means the Clean Air Act Amendments of 1990 contained in 42 USC 7401 to 7671q, and regulations adopted under it.

(10) "Condensate" means hydrocarbon liquid separated from natural gas that condenses due to changes in temperature, pressure, or both, and remains liquid at standard conditions.

(11) "Covered process" means a process that has a regulated substance present in an amount that is in excess of the threshold quantity established in rule 3745-104-02 of the Administrative Code.

(12) "Crude oil" means any naturally occurring, unrefined petroleum liquid.

(13) "DOT" means the United States department of transportation.

(14) "Environmental receptor" means natural areas such as national or state parks, forests, or monuments; federally designated or state-designated wildlife sanctuaries, preserves, refuges, or areas; and federal wilderness areas, that could be exposed at any time to toxic concentrations, radiant heat, or overpressure greater than or equal to the endpoints prescribed in rule 3745-104-10 of the Administrative Code, as a result of an accidental release and that can be identified on United States geological survey maps.

(15) "Field gas" means gas extracted from a production well before the gas enters a natural gas processing plant.

(16) "Hot work" means work involving electric or gas welding, cutting, brazing, or similar flame or spark-producing operations.

(17) "Injury" means any effect on a human that requires medical treatment or hospitalization and that results from either:

(a) The direct exposure to toxic concentrations, radiant heat, or overpressures resulting from an accidental release; or

(b) The direct consequences of a vapor cloud explosion (such as flying glass, debris, and other projectiles) from an accidental release.

(18) "Major change" means introduction of a new process, process equipment, or regulated substance, an alteration of process chemistry that results in any change to safe operating limits, or other alteration that introduces a new hazard.

(19) "Mechanical integrity" means the process of ensuring that process equipment is fabricated from the proper materials of construction and is properly installed, maintained, and replaced to prevent failures and accidental releases.

(20) "Medical treatment" means treatment, other than first aid, administered by a physician or registered professional personnel under standing orders from a physician.

(21) "Mitigation" or "mitigation system" means specific activities, technologies, or equipment designed or deployed to capture or control substances upon loss of containment to minimize exposure of the public or the environment. Passive

mitigation means equipment, devices, or technologies that function without human, mechanical, or other energy input. Active mitigation means equipment, devices, or technologies that need human, mechanical, or other energy input to function.

(22) "NAICS" means North American industry classification system.

(23) "Natural gas processing plant (gas plant)" means any processing site engaged in the extraction of natural gas liquids from field gas, fractionation of mixed natural gas liquids to natural gas products, or both, classified as North American industrial classification system (NAICS) code 211112 (previously standard industrial classification (SIC) code 1321).

(24) "NFPA" means the national fire protection association.

(25) "Offsite" means areas beyond the property boundary of the stationary source, and areas within the property boundary to which the public has routine and unrestricted access during or outside business hours.

(26) "OSHA" means the United States occupational safety and health administration.

(27) "Owner or operator" means any person who owns, leases, operates, controls, or supervises a stationary source.

(28) "Petroleum refining process unit" means a process unit used in an establishment primarily engaged in petroleum refining as defined in NAICS code 32411 for petroleum refining (formerly SIC code 2911) and used for the following: producing transportation fuels (such as gasoline, diesel fuels, and jet fuels), heating fuels (such as kerosene, fuel gas distillate, and fuel oils), or lubrications; separating petroleum, or separating, cracking, reacting, or reforming intermediate petroleum streams. Examples of such units include, but are not limited to, petroleum based solvent units, alkylation units, catalytic hydrotreating, catalytic hydrorefining, catalytic hydrocracking, catalytic reforming, catalytic cracking, crude distillation, lube oil process processing.

(29) "Population" means the public.

(30) "Process" means any activity involving a regulated substance, including any use, storage, manufacturing, handling, or on-site movement of the substance or any combination of these activities. Any group of vessels that are interconnected, or separate vessels that are located in such a manner that a regulated substance potentially could be involved in a release, shall be considered a single process.

(31) "Produced water" means water extracted from the earth from an oil or natural gas production well, or that is separated from oil or natural gas after extraction.

(32) "Public" means any person except employees or contractors at the stationary source.

(33) "Public receptor" means off-site residences, institutions such as schools or hospitals, industrial, commercial, and office building, parks, or recreational areas inhabited or occupied by the public at any time without restriction by the stationary source where members of the public could be exposed to toxic concentrations, radiant heat, or overpressure as a result of an accidental release.

(34) "Regulated substance" means a toxic or flammable substance listed in rule 3745-104-04 of the Administrative Code.

(35) "Replacement in kind" means a replacement that satisfies the design specifications.

(36) "Retail facility" means a stationary source at which more than one-half of the income is obtained from direct sales to end users or at which more than one-half of the fuel sold, by volume, is sold through a cylinder exchange program.

(37) "Risk management plan " or "RMP" means a risk management plan required in rule 3745-104-38 of the Administrative Code.

(38) "Stationary source" means any buildings, structures, equipment, installations, or substance-emitting stationary activities that belong to the same industrial group as described in the standard industrial classification manual, 1987, that are located on one or more contiguous properties under the control of the same person or persons (or persons under common control), and from which an accidental release may occur. Properties shall not be considered contiguous solely because of a railroad or pipeline right-of-way.

(a) "Stationary source" includes transportation containers that are used for storage not incident to transportation and transportation containers that are connected to equipment at a stationary source for loading and unloading. "Stationary source" does not include the transportation, including storage incident to transportation, of any regulated substance under this chapter. "Stationary source" does not include naturally occurring hydrocarbon reservoirs.

(b) "Transportation" includes, but is not limited to, transportation that is subject to oversight or regulation under 49 CFR Part 192, 193, or 195, or to a state natural gas or hazardous liquid program for which the state has in effect a certification to the United States department of transportation under 49 USC 60105.

(39) "Threshold quantity" means the quantity established for a regulated substance in rule 3745-104-02 of the Administrative Code that, if exceeded, subject an owner or operator to compliance with this chapter and rules adopted under it.

(40) "Vessel" means any reactor, tank, drum, barrel, cylinder, vat, kettle, boiler, pipe, hose, or other container.

(41) "Worst-case release" means the release of the largest quantity of a regulated substance from a vessel or process line failure that results in the greatest distance to an endpoint defined in rule 3745-104-09 of the Administrative Code.

(C) Referenced materials. This chapter includes references to certain subject matter or materials. The text of the referenced materials is not included in the rules contained in this chapter. Information on the availability of the referenced materials as well as the date of, and/or the particular edition or version of the material is included in this rule. For materials subject to change, only the specific versions specified in this rule are referenced. Material is referenced as it exists on the effective date of this rule. Except for subsequent annual publication of existing (unmodified) Code of Federal Regulation compilations, any amendment or revision to a reference document is not applicable unless and until this rule has been amended to specify the new dates.

(1) Availability. The referenced materials are available as follows:

(a) Chemical Abstract Service (CAS). Information can be obtained by writing to: "Chemical Abstract Service, 2540 Olentangy River Road, Columbus, OH 43202," or by visiting their web site at www.cas.org.

(b) Clean Air Act as defined in this rule. Information and copies may be obtained by writing to: "Superintendent of Documents, Attn: New Orders, PO Box 371954, Pittsburgh, PA 15250-7954." The full text of the Act as amended in 1990 is also available in electronic format at www.epa.gov/oar/caa/. A copy of the Act is also available for inspection and copying at most public libraries and "The State Library of Ohio."

(c) Code of Federal Regulations. Information and copies may be obtained by writing to: "Superintendent of Documents, Attn: New Orders, PO Box 371954, Pittsburgh, PA 15250-7954." The full text of the CFR is also available in electronic format at www.access.gpo.gov/nara/cfr/. The CFR compilations are also available for inspection and copying at most public libraries and "The State Library of Ohio."

(d) North American industry classification system. Information and copies may be obtained by contacting the National Technical Information Service at 1-800-553-6847. The codes are also available in electronic format at www.census.gov/epcd/www/naics.html.

(e) National Fire Protection Association. Information on the National Fire Protection Association codes may be obtained by contacting the association at 1 Batterymarch Park, Quincy, Massachusetts 02169-7471, 617-770-3000. Codes may be ordered on line at www.nfpa.org/catalog/home/index.asp. Copies of the code are available at most public libraries and "The State Library of Ohio."

(f) Risk Management Plan Offsite Consequence Analysis Guidance. The guidance may be obtained by contacting the USEPA hotline at 1-800-424-9346. The full documentation may be obtained in electronic format at http//www.epa.gov/emergencies/guidance.htm#rmp. The guidance may also be obtained and copied at most public libraries and "The State Library of Ohio."

(g) United States Code. Information and copies may be obtained by writing to: "Superintendent of Documents, Attn: New Orders, PO Box 371954, Pittsburgh, PA 15250-7954." The full text of the United States Code is also available in electronic format at http//www.gpoaccess.gov/uscode/. USC compilations are also available for inspection and copying at most public libraries and "The State Library of Ohio."

(2) Referenced materials.

(a) 15 USC 632; "Commerce and Trade, Aid to Small Business, Small Business Concern;" as published January 3, 2007 in the 2006 edition of the United States Code.

(b) 29 CFR 1910.119; "Process Safety Management of Highly Hazardous Chemicals;" 57 FR 6403, Feb. 24, 1992; 57 FR 7847, Mar. 4, 1992, as amended at 61 FR 9238, Mar. 7, 1996; 67 FR 67964, Nov. 7, 2002.

(c) 29 CFR 1910.252; "Subpart Q - Welding, Cutting, and Brazing;" 39 FR 23502, June 27, 1974, as amended at 40 FR 23073, May 28, 1975; 43 FR 49750, Oct. 24, 1978; 49 FR 5323, Feb. 10, 1984; 51 FR 34562, Sept. 29, 1986; 54 FR 24334, June 7, 1989; 55 FR 13696, Apr. 11, 1990; 61 FR 9227, March 7, 1996; 63 FR 1152, Jan. 8, 1998.

(d) 29 CFR 1920.1200; "Toxic and Hazardous Substances;" 59 FR 6170, Feb. 9, 1994, as amended at 59 FR 17479, Apr. 13, 1994; 59 FR 65948, Dec. 22, 1994; 61 FR 9245, Mar. 7, 1996.

(e) 40 CFR 71.7; "Federal Operating Permit Programs, Permit issuance, renewal, reopenings, and revisions;" 61 FR 34228, July 1, 1996, as amended at 64 FR 8263, Feb. 19, 1999.

(f) 40 CFR Part 51, Appendix W, section 8.2.8; "Guideline on Air Quality Models;" 59 FR 16715, Apr. 7, 1994, 70 FR 68228, Nov. 9, 2005.

(g) 40 CFR Part 68; "Accidental Release Prevention Requirements Under Clean Air Act Section 112(r)(7);" as published in the July 1, 2009 Code of Federal Regulations.

(h) 40 CFR Part 71; "Federal Operating Permit Programs;" as published in the July 1, 2009 Code of Federal Regulations.

(i) 40 CFR Part 355; "Emergency Planning and Notification;" as published in the in the July 1, 2009 Code of Federal Regulations.

(j) 42 USC 7401 to 7671q; "The Public Health and Welfare-Air Pollution Prevention and Control;" Pub. L. 101-549, title I-IX, Sec 101-901, Nov. 15, 1990, 104 Stat. 2399; as amended Pub. L. 103-437, Sec 15(s), Nov. 2, 1994, 108 Stat. 4594; Pub. L. 104-264, title IV, Sec. 406(b), Oct. 9, 1996, 110 Stat. 3257; Pub. L. 105-277, div. A, Sec. 101(a)(title VII, Sec. 764), Oct 21, 1998, 112 Stat. 2681, 2681-36 Pub. L. 105-362, title XV, Sec. 1501(b), Nov. 10, 1998, 112 Stat. 3294.

(k) 42 USC 11003; "Title 42-The Public Health and Welfare Chapter 116-Emergency Planning and Community Right-to-Know Subchapter I - Emergency Planning and Notification;" published January 3, 2007 in the 2006 Edition of the United States Code.

(l) 49 CFR Part 192; "Transportation of Hazardous Liquids by Pipeline;" as published in the July 1, 2009 Code of Federal Regulations.

(m) 49 CFR Part 193; "Transportation of Hazardous Liquids by Pipeline;" as published in the July 1, 2009 Code of Federal Regulations.

(n) 49 CFR Part 195; "Transportation of Hazardous Liquids by Pipeline;" as published in the July 1, 2009 Code of Federal Regulations.

(o) 49 USC section 60105; "Transportation: Subtitle VIII - Pipelines;" as published January 3, 2007 in the 2006 Edition of the United States Code.

(p) NFPA 704; "Standard System for the Identification of the Hazards of Materials for Emergency Response;" 2007 Edition.

(q) "Risk Management Plan Offsite Consequence Analysis"; April 1999.

(r) Section 112(r) of the Clean Air Act; contained in 42 USC Section 7412(r); "Hazardous Air Pollutants, Prevention of Accidental Releases;" July 14, 1955, ch. 360, title I, Sec. 112; as added Pub. L. 91-604, Sec. 4(a), Dec. 31,

1970, 84 Stat. 1685; amended Pub. L. 95-95, title I, Sec. 109(d)(2), 110, title IV, Sec. 401(c), Aug. 7, 1977, 91 Stat. 701, 703, 791; Pub. L. 95-623, Sec. 13(b), Nov. 9, 1978, 92 Stat. 3458; Pub. L. 101-549, title III, Sec. 301, Nov. 15, 1990, 104 Stat. 2531 Pub. L. 102-187, Dec. 4, 1991, 105 Stat. 1285; Pub. L. 105-362, title IV, Sec. 402(b), Nov. 10, 1998, 112 Stat. 3283; Pub. L. 106-40, Sec. 2, 3(a), Aug. 5, 1999, 113 Stat. 207, 208.

Effective: 01/08/2010

R.C. 119.032 review dates: 10/22/2009 and 10/23/2014

CERTIFIED ELECTRONICALLY
Certification

12/29/2009
Date

Promulgated Under: 119.03
Statutory Authority: 3753.02
Rule Amplifies: 3753
Prior Effective Dates: 8/13/99, 3/09/01, 7/01/05

3745-104-02 **Threshold determination.**

[Comment: For dates of non-regulatory government publications, publications of recognized organizations and associations, federal rules, and federal statutory provisions references in this rule, see paragraph (C) of rule 3745-104-01 of the Administrative Code titled "Referenced materials."]

(A) A threshold quantity of a regulated substance listed in rule 3745-104-04 of the Administrative Code is present at a stationary source if the total quantity of the regulated substance contained in a process exceeds the threshold.

(B) For the purposes of determining whether more than a threshold quantity of a regulated substance is present at the stationary source, the following exemptions apply:

(1) Concentrations of a regulated toxic substance in a mixture. If a regulated substance is present in a mixture and the concentration of the regulated substance is below one per cent by weight of the mixture, the amount of the substance in the mixture need not be considered when determining whether more than a threshold quantity is present at the stationary source. Except for oleum, toluene, 2,4-diisocyanate, toluene 2,6-diisocyanate, and toluene diisocyanate (unspecified isomer), if the concentration of the regulated substance in the mixture is one per cent or greater by weight, but the owner or operator can demonstrate that the partial pressure of the regulated substance in the mixture (solution) under handling or storage conditions in any portion of the process is less than ten millimeters of mercury, the amount of the regulated substance in the mixture in that portion of the process need not be considered when determining whether more than a threshold quantity is present at the stationary source. The owner or operator shall document this partial pressure measurement or estimate.

(2) Concentrations of a regulated flammable substance in a mixture.

(a) If a regulated substance is present in a mixture and the concentration of the regulated substance is below one per cent by weight of the mixture, the mixture need not be considered when determining whether more than a threshold quantity of the regulated substance is present at the stationary source. Except as provided in paragraphs (B)(2)(b) and (B)(2)(c) of this rule, if the concentration of the regulated substance is one per cent or greater by weight of the mixture, then, for purposes of determining whether a threshold quantity is present at the stationary source, the entire weight of the mixture shall be treated as the regulated substance unless the owner or operator can demonstrate that the mixture itself does not have a national fire protection association flammability hazard rating of four. The demonstration shall be in accordance with the definition of flammability

hazard rating four in the NFPA 704 The owner or operator shall document the national fire protection association flammability hazard rating.

(b) Gasoline. Regulated substances in gasoline, when in distribution or related storage for use as fuel for internal combustion engines, need not be considered when determining whether more than a threshold quantity is present at a stationary source.

(c) Naturally occurring hydrocarbon mixtures. Prior to entry into a natural gas processing plant or a petroleum refining process unit, regulated substances in naturally occurring hydrocarbon mixtures need not be considered when determining whether more than a threshold quantity is present at a stationary source. Naturally occurring hydrocarbon mixtures include any combination of the following: condensate, crude oil, field gas, and produced water, each as defined in rule 3745-104-01 of the Administrative Code.

(3) Articles. Regulated substances contained in articles need not be considered when determining whether more than a threshold quantity is present at the stationary source.

(4) Uses. Regulated substances, when in use for the following purposes, need not be included in determining whether more than a threshold quantity is present at the stationary source:

(a) Use as a structural component of the stationary source;

(b) Use of products for routine janitorial maintenance;

(c) Use of employees of foods, drugs, cosmetics, or other personal items containing the regulated substance; and

(d) Use of regulated substances present in process water or non-contact cooling water as drawn from the environment or municipal sources, or use of regulated substances present in air used either as compressed air or as part of combustion.

(5) Activities in laboratories. If a regulated substance is manufactured, processed, or used in a laboratory at a stationary source under the supervision of a technically qualified individual, the quantity of the substance need not be considered in determining whether a threshold quantity is present. This exemption does not apply to:

(a) Speciality chemical production;

(b) Manufacture, processing, or use of regulated substances in pilot plant scale operations; and

(c) Activities conducted outside the laboratory.

Effective: 01/08/2010

R.C. 119.032 review dates: 10/22/2009 and 10/23/2014

CERTIFIED ELECTRONICALLY
Certification

12/29/2009
Date

Promulgated Under: 119.03
Statutory Authority: 3753.02
Rule Amplifies: 3753
Prior Effective Dates: 8/13/99, 7/1/05

3745-104-03 **Exemptions.**

(A) Agricultural nutrients. Ammonia used as an agricultural nutrient, when held by farmers, is exempt from all provisions of this chapter.

(B) Flammable substances used as fuel or held for sale as fuel at retail facilities. A flammable substance listed in tables 3 and 4 of the appendix to rule 3745-104-04 of the Administrative Code are exempt from all provisions of this chapter when the substance is used as a fuel or held for sale as a fuel at a retail facility.

Effective: 01/08/2010

R.C. 119.032 review dates: 10/22/2009 and 10/23/2014

CERTIFIED ELECTRONICALLY
Certification

12/29/2009
Date

Promulgated Under: 119.03
Statutory Authority: 3753.02
Rule Amplifies: 3753
Prior Effective Dates: 8/13/99, 3/09/01

3745-104-04 **List of substances.**

[Comment: For dates of non-regulatory government publications, publications of recognized organizations and associations, federal rules, and federal statutory provisions referenced in this rule, see paragraph (C) of rule 3745-104-01 of the Administrative Code titled "Referenced materials."]

(A) Regulated toxic and flammable substances under section 112(r) of the Clean Air Act are the substances listed in the appendix to this rule. Threshold quantities for listed toxic and flammable substances are specified in the tables.

(B) The basis for placing toxic and flammable substances on the list of regulated substances are explained in the notes to the list.

Effective: 01/08/2010

R.C. 119.032 review dates: 10/22/2009 and 10/23/2014

CERTIFIED ELECTRONICALLY
Certification

12/29/2009
Date

Promulgated Under: 119.03
Statutory Authority: 3753.02
Rule Amplifies: 3753
Prior Effective Dates: 08/13/99, 03/09/01, 07/01/05

3745-104-04 Appendix

TABLE 1 TO '68.130 - LIST OF REGULATED TOXIC SUBSTANCES AND THRESHOLD QUANTITIES FOR ACCIDENTAL RELEASE PREVENTION
[ALPHABETICAL ORDER - 77 SUBSTANCES]

Chemical Name	CAS No	Threshold Quantity (lbs)	Basis for Listing
Acrolein [2-Propenal]	107-02-8	5,000	b
Acrylonitrile [2-Propenenitrile]	107-13-1	20,000	b
Acrylyl chloride [2-Propenoyl chloride]	814-68-6	5,000	b
Allyl alcohol [2-Propen-1-ol]	107-18-6	15,000	b
Allylamine [2-Propen-1-amine]	107-11-9	10,000	b
Ammonia (anhydrous)	7664-41-7	10,000	a, b
Ammonia (conc 20% or greater)	7664-41-7	20,000	a, b
Arsenous trichloride	7784-34-1	15,000	b
Arsine	7784-42-1	1,000	b
Boron trichloride [Borane, trichloro-]	10294-34-5	5,000	b
Boron trifluoride [Borane, trifluoro-]	7637-07-2	5,000	b
Boron trifluoride compound with methyl ether (1:1) [Boron, trifluoro[oxybis[metane]]-, T-4-	353-42-4	15,000	b
Bromine	7726-95-6	10,000	a, b
Carbon disulfide	75-15-0	20,000	b
Chlorine	7782-50-5	2,500	a, b
Chlorine dioxide [Chlorine oxide (ClO2)]	10049-04-4	1,000	c
Chloroform [Methane, trichloro-]	67-66-3	20,000	b
Chloromethyl ether [Methane, oxybis[chloro-]	542-88-1	1,000	b
Chloromethyl methyl ether [Methane, chloromethoxy-]	107-30-2	5,000	b
Crotonaldehyde [2-Butenal]	4170-30-3	20,000	b

Chemical Name	CAS No	Threshold Quantity (lbs)	Basis for Listing
Crotonaldehyde, (E)- [2-Butenal, (E)-]	123-73-9	20,000	b
Cyanogen chloride	506-77-4	10,000	c
Cyclohexylamine [Cyclohexanamine]	108-91-8	15,000	b
Diborane	19287-45-7	2,500	b
Dimethyldichlorosilane [Silane, dichlorodimethyl-]	75-78-5	5,000	b
1,1-Dimethylhydrazine [Hydrazine, 1,1-dimethyl-]	57-14-7	15,000	b
Epichlorohydrin [Oxirane, (chloromethyl)-]	106-89-8	20,000	b
Ethylenediamine [1,2-Ethanediamine]	107-15-3	20,000	b
Ethyleneimine [Aziridine]	151-56-4	10,000	b
Ethylene oxide [Oxirane]	75-21-8	10,000	a, b
Fluorine	7782-41-4	1,000	b
Formaldehyde (solution)	50-00-0	15,000	b
Furan	110-00-9	5,000	b
Hydrazine	302-01-2	15,000	b
Hydrochloric acid (conc 37% or greater)	7647-01-0	15,000	d
Hydrocyanic acid	74-90-8	2,500	a, b
Hydrogen chloride (anhydrous) [Hydrochloric acid]	7647-01-0	5,000	a
Hydrogen fluoride/Hydrofluoric acid (conc 50% or greater) [Hydrofluoric acid]	7664-39-3	1,000	a, b
Hydrogen selenide	7783-07-5	500	b
Hydrogen sulfide	7783-06-4	10,000	a, b
Iron, pentacarbonyl- [Iron carbonyl (Fe(CO)5), (TB-5-11)-]	13463-40-6	2,500	b
Isobutyronitrile [Propanenitrile, 2-methyl-]	78-82-0	20,000	b
Isopropyl chloroformate [Carbonochloridic acid, 1-methylethyl ester]	108-23-6	15,000	b
Methacrylonitrile [2-Propenenitrile, 2-methyl-]	126-98-7	10,000	b
Methyl chloride [Methane, chloro-]	74-87-3	10,000	a
Methyl chloroformate [Carbonochloridic acid, methylester]	79-22-1	5,000	b

Chemical Name	CAS No	Threshold Quantity (lbs)	Basis for Listing
Methyl hydrazine [Hydrazine, methyl-]	60-34-4	15,000	b
Methyl isocyanate [Methane, isocyanato-]	624-83-9	10,000	a, b
Methyl mercaptan [Methanethiol]	74-93-1	10,000	b
Methyl thiocyanate [Thiocyanic acid, methyl ester]	556-64-9	20,000	b
Methyltrichlorosilane [Silane, trichloromethyl-]	75-79-6	5,000	b
Nickel carbonyl	13463-39-3	1,000	b
Nitric acid (conc 80% or greater)	7697-37-2	15,000	b
Nitric oxide [Nitrogen oxide (NO)]	10102-43-9	10,000	b
Oleum (Fuming Sulfuric acid) [Sulfuric acid, mixture with sulfur trioxide][1]	8014-95-7	10,000	e
Peracetic acid [Ethaneperoxoic acid]	79-21-0	10,000	b
Perchloromethylmercaptan [Methanesulfenyl chloride, trichloro-]	594-42-3	10,000	b
Phosgene [Carbonic dichloride]	75-44-5	500	a, b
Phosphine	7803-51-2	5,000	b
Phosphorus oxychloride [Phosphoryl chloride]	10025-87-3	5,000	b
Phosphorus trichloride [Phosphorous trichloride]	7719-12-2	15,000	b
Piperidine	110-89-4	15,000	b
Propionitrile [Propanenitrile]	107-12-0	10,000	b
Propyl chloroformate [Carbonochloridic acid, propylester]	109-61-5	15,000	b
Propyleneimine [Aziridine, 2-methyl-]	75-55-8	10,000	b
Propylene oxide [Oxirane, methyl-]	75-56-9	10,000	b
Sulfur dioxide (anhydrous)	7446-09-5	5,000	a, b
Sulfur tetrafluoride [Sulfur fluoride (SF4), (T-4)-]	7783-60-0	2,500	b
Sulfur trioxide	7446-11-9	10,000	a, b
Tetramethyllead [Plumbane, tetramethyl-]	75-74-1	10,000	b
Tetranitromethane [Methane, tetranitro-]	509-14-8	10,000	b
Titanium tetrachloride [Titanium chloride (TiCl4) (T-4)-]	7550-45-0	2,500	b
Toluene 2,4-diisocyanate [Benzene,	584-84-9	10,000	a

Chemical Name	CAS No	Threshold Quantity (lbs)	Basis for Listing
2,4-diisocyanato-1-methyl-][1]			
Toluene 2,6-diisocyanate [Benzene, 1,3-diisocyanato-2-methyl-][1]	91-08-7	10,000	a
Toluene diisocyanate (unspecified isomer) [Benzene, 1,3-diisocyanatomethyl-][1]	26471-62-5	10,000	a
Trimethylchlorosilane [Silane, chlorotrimethyl-]	75-77-4	10,000	b
Vinyl acetate monomer [Acetic acid ethenyl ester]	108-05-4	15,000	b

[1]The mixture exemption in '68.115(b)(1) does not apply to the substance.

Basis for Listing:

[a]Mandated for listing by Congress.
[b]On EHS list, vapor pressure 10 mmHg or greater.
[c]Toxic gas.
[d]Toxicity of hydrogen chloride, potential to release hydrogen chloride, and history of accidents.
[e]Toxicity of sulfur trioxide and sulfuric acid, potential to release sulfur trioxide, and history of accidents.

TABLE 2 TO '68.130 - LIST OF REGULATED TOXIC SUBSTANCES AND THRESHOLD QUANTITIES FOR ACCIDENTAL RELEASE PREVENTION
[CAS NUMBER ORDER - 77 SUBSTANCES]

CAS No.	Chemical Name	Threshold Quantity (lbs)	Basis for Listing
50-00-0	Formaldehyde (solution)	15,000	b
57-14-7	1,1-Dimethylhydrazine [Hydrazine, 1,1-dimethyl-]	15,000	b
60-34-4	Methyl hydrazine [Hydrazine, methyl-]	15,000	b
67-66-3	Chloroform [Methane, trichloro-]	20,000	b
74-87-3	Methyl chloride [Methane, chloro-]	10,000	a
74-90-8	Hydrocyanic acid	2,500	a, b
74-93-1	Methyl mercaptan [Methanethiol]	10,000	b
75-15-0	Carbon disulfide	20,000	b
75-21-8	Ethylene oxide [Oxirane]	10,000	a, b
75-44-5	Phosgene [Carbonic dichloride]	500	a, b
75-55-8	Propyleneimine [Aziridine, 2-methyl-]	10,000	b
75-56-9	Propylene oxide [Oxirane, methyl-]	10,000	b
75-74-1	Tetramethyllead [Plumbane, tetramethyl-]	10,000	b
75-77-4	Trimethylchlorosilane [Silane, chlorotrimethyl-]	10,000	b
75-78-5	Dimethyldichlorosilane [Silane, dichlorodimethyl-]	5,000	b
75-79-6	Methyltrichlorosilane [Silane, trichloromethyl-]	5,000	b
78-82-0	Isobutyronitrile [Propanenitrile, 2-methyl-]	20,000	b
79-21-0	Peracetic acid [Ethaneperoxoic acid]	10,000	b
79-22-1	Methyl chloroformate [Carbonochloridic acid, methylester]	5,000	b
91-08-7	Toluene 2,6-diisocyanate [Benzene, 1,3-diisocyanato-2-methyl-][1]	10,000	a
106-89-8	Epichlorohydrin [Oxirane, (chloromethyl)-]	20,000	b
107-02-8	Acrolein [2-Propenal]	5,000	b
107-11-9	Allylamine [2-Propen-1-amine]	10,000	b
107-12-0	Propionitrile [Propanenitrile]	10,000	b

CAS No.	Chemical Name	Threshold Quantity (lbs)	Basis for Listing
107-13-1	Acrylonitrile [2-Propenenitrile]	20,000	b
107-15-3	Ethylenediamine [1,2-Ethanediamine]	20,000	b
107-18-6	Allyl alcohol [2-Propen-1-ol]	15,000	b
107-30-2	Chloromethyl methyl ether [Methane, chloromethoxy-]	5,000	b
108-05-4	Vinyl acetate monomer [Acetic acid ethenyl ester]	15,000	b
108-23-6	Isopropyl chloroformate [Carbonochloridic acid, 1-methylethyl ester]	15,000	b
108-91-8	Cyclohexylamine [Cyclohexanamine]	15,000	b
109-61-5	Propyl chloroformate [Carbonochloridic acid, propylester]	15,000	b
110-00-9	Furan	5,000	b
110-89-4	Piperidine	15,000	b
123-73-9	Crotonaldehyde, (E)- [2-Butenal, (E)-]	20,000	b
126-98-7	Methacrylonitrile [2-Propenenitrile, 2-methyl-]	10,000	b
151-56-4	Ethyleneimine [Aziridine]	10,000	b
302-01-2	Hydrazine	15,000	b
353-42-4	Boron trifluoride compound with methyl ether (1:1) [Boron, trifluoro[oxybis[metane]]-, T-4-	15,000	b
506-77-4	Cyanogen chloride	10,000	c
509-14-8	Tetranitromethane [Methane, tetranitro-]	10,000	b
542-88-1	Chloromethyl ether [Methane, oxybis[chloro-]	1,000	b
556-64-9	Methyl thiocyanate [Thiocyanic acid, methyl ester]	20,000	b
584-84-9	Toluene 2,4-diisocyanate [Benzene, 2,4-diisocyanato-1-methyl-][1]	10,000	a
594-42-3	Perchloromethylmercaptan [Methanesulfenyl chloride, trichloro-]	10,000	b
624-83-9	Methyl isocyanate [Methane, isocyanato-]	10,000	a, b
814-68-6	Acrylyl chloride [2-Propenoyl chloride]	5,000	b
4170-30-3	Crotonaldehyde [2-Butenal]	20,000	b

CAS No.	Chemical Name	Threshold Quantity (lbs)	Basis for Listing
7446-09-5	Sulfur dioxide (anhydrous)	5,000	a, b
7446-11-9	Sulfur trioxide	10,000	a, b
7550-45-0	Titanium tetrachloride [Titanium chloride (TiCl4) (T-4)-]	2,500	b
7637-07-2	Boron trifluoride [Borane, trifluoro-]	5,000	b
7647-01-0	Hydrochloric acid (conc 37% or greater)	15,000	d
7647-01-0	Hydrogen chloride (anhydrous) [Hydrochloric acid]	5,000	a
7664-39-3	Hydrogen fluoride/Hydrofluoric acid (conc 50% or greater) [Hydrofluoric acid]	1,000	a, b
7664-41-7	Ammonia (anhydrous)	10,000	a, b
7664-41-7	Ammonia (conc 20% or greater)	20,000	a, b
7697-37-2	Nitric acid (conc 80% or greater)	15,000	b
7719-12-2	Phosphorus trichloride [Phosphorous trichloride]	15,000	b
7726-95-6	Bromine	10,000	a, b
7782-41-4	Fluorine	1,000	b
7782-50-5	Chlorine	2,500	a, b
7783-06-4	Hydrogen sulfide	10,000	a, b
7783-07-5	Hydrogen selenide	500	b
7783-60-0	Sulfur tetrafluoride [Sulfur fluoride (SF4), (T-4)-]	2,500	b
7784-34-1	Arsenous trichloride	15,000	b
7784-42-1	Arsine	1,000	b
7803-51-2	Phosphine	5,000	b
8014-95-7	Oleum (Fuming Sulfuric acid) [Sulfuric acid, mixture with sulfur trioxide][1]	10,000	e
10025-87-3	Phosphorus oxychloride [Phosphoryl chloride]	5,000	b
10049-04-4	Chlorine dioxide [Chlorine oxide (ClO2)]	1,000	c
10102-43-9	Nitric oxide [Nitrogen oxide (NO)]	10,000	b
10294-34-5	Boron trichloride [Borane, trichloro-]	5,000	b
13463-39-3	Nickel carbonyl	1,000	b

CAS No.	Chemical Name	Threshold Quantity (lbs)	Basis for Listing
13463-40-6	Iron, pentacarbonyl- [Iron carbonyl (Fe(CO)5), (TB-5-11)-]	2,500	b
19287-45-7	Diborane	2,500	b
26471-62-5	Toluene diisocyanate (unspecified isomer) [Benzene, 1,3-diisocyanatomethyl-][1]	10,000	a

[1]The mixture exemption in '68.115(b)(1) does not apply to the substance.

Basis for Listing:

[a]Mandated for listing by Congress.
[b]On EHS list, vapor pressure 10 mmHg or greater.
[c]Toxic gas.
[d]Toxicity of hydrogen chloride, potential to release hydrogen chloride, and history of accidents.
[e]Toxicity of sulfur trioxide and sulfuric acid, potential to release sulfur trioxide, and history of accidents.

TABLE 3 TO '68.130 - LIST OF REGULATED FLAMMABLE SUBSTANCES AND THRESHOLD QUANTITIES FOR ACCIDENTAL RELEASE PREVENTION
[ALPHABETICAL ORDER - 63 SUBSTANCES]

Chemical Name	CAS No.	Threshold Quantity (lbs)	Basis for Listing
Acetaldehyde	75-07-0	10,000	g
Acetylene [Ethyne]	74-86-2	10,000	f
Bromotrifluorethylene [Ethene, bromotrifluoro-]	598-73-2	10,000	f
1,3-Butadiene	106-99-0	10,000	f
Butane	106-97-8	10,000	f
1-Butene	106-98-9	10,000	f
2-Butene	107-01-7	10,000	f
Butene	25167-67-3	10,000	f
2-Butene-cis	590-18-1	10,000	f
2-Butene-trans [2-Butene, (E)]	624-64-6	10,000	f
Carbon oxysulfide [Carbon oxide sulfide (COS)]	463-58-1	10,000	f
Chlorine monoxide [Chlorine oxide]	7791-21-1	10,000	f
2-Chloropropylene [1-Propene, 2-chloro-]	557-98-2	10,000	g
1-Chloropropylene [1-Propene, 1-chloro-]	590-21-6	10,000	g
Cyanogen [Ethanedinitrile]	460-19-5	10,000	f
Cyclopropane	75-19-4	10,000	f
Dichlorosilane [Silane, dichloro-]	4109-96-0	10,000	f
Difluoroethane [Ethane, 1,1-difluoro-]	75-37-6	10,000	f
Dimethylamine [Methanamine, N-methyl-]	124-40-3	10,000	f
2,2-Dimethylpropane [Propane, 2,2-dimethyl-]	463-82-1	10,000	f
Ethane	74-84-0	10,000	f
Ethyl acetylene [1-Butyne]	107-00-6	10,000	f
Ethylamine [Ethanamine]	75-04-7	10,000	f
Ethyl chloride [Ethane, chloro-]	75-00-3	10,000	f
Ethylene [Ethene]	74-85-1	10,000	f
Ethyl ether [Ethane, 1,1'-oxybis-]	60-29-7	10,000	g
Ethyl mercaptan [Ethanethiol]	75-08-1	10,000	g
Ethyl nitrite [Nitrous acid, ethyl ester]	109-95-5	10,000	f

Chemical Name	CAS No.	Threshold Quantity (lbs)	Basis for Listing
Hydrogen	1333-74-0	10,000	f
Isobutane [Propane, 2-methyl]	75-28-5	10,000	f
Isopentane [Butane, 2-methyl-]	78-78-4	10,000	g
Isoprene [1,3-Butadiene, 2-methyl-]	78-79-5	10,000	g
Isopropylamine [2-Propanamine]	75-31-0	10,000	g
Isopropyl chloride [Propane, 2-chloro-]	75-29-6	10,000	g
Methane	74-82-8	10,000	f
Methylamine [Methanamine]	74-89-5	10,000	f
3-Methyl-1-butene	563-45-1	10,000	f
2-Methyl-1-butene	563-46-2	10,000	g
Methyl ether [Methane, oxybis-]	115-10-6	10,000	f
Methyl formate [Formic acid, methyl ester]	107-31-3	10,000	g
2-Methylpropene [1-Propene, 2-methyl-]	115-11-7	10,000	f
1,3-Pentadiene	504-60-9	10,000	f
Pentane	109-66-0	10,000	g
1-Pentene	109-67-1	10,000	g
2-Pentene, (E)-	646-04-8	10,000	g
2-Pentene, (Z)-	627-20-3	10,000	g
Propadiene [1,2-Propadiene]	463-49-0	10,000	f
Propane	74-98-6	10,000	f
Propylene [1-Propene]	115-07-1	10,000	f
Propyne [1-Propyne]	74-99-7	10,000	f
Silane	7803-62-5	10,000	f
Tetrafluoroethylene [Ethene, tetrafluoro-]	116-14-3	10,000	f
Tetramethylsilane [Silane, tetramethyl-]	75-76-3	10,000	g
Trichlorosilane [Silane, trichloro-]	10025-78-2	10,000	g
Trifluorochloroethylene [Ethene, chlorotrifluoro-]	79-38-9	10,000	f
Trimethylamine [Methanamine, N,N-dimethyl-]	75-50-3	10,000	f
Vinyl acetylene [1-Buten-3-yne]	689-97-4	10,000	f
Vinyl chloride [Ethene, chloro-]	75-01-4	10,000	a, f
Vinyl ethyl ether [Ethene, ethoxy-]	109-92-2	10,000	g

Chemical Name	CAS No.	Threshold Quantity (lbs)	Basis for Listing
Vinyl fluoride [Ethene, fluoro-]	75-02-5	10,000	f
Vinylidene chloride [Ethene, 1,1-dichloro-]	75-35-4	10,000	g
Vinylidene fluoride [Ethene, 1,1-difluoro-]	75-38-7	10,000	f
Vinyl methyl ether [Ethene, methoxy-]	107-25-5	10,000	f

Basis for Listing:

[a]Mandated for listing by Congress.
[f]Flammable gas.
[g]Volatile flammable liquid.

TABLE 4 TO '68.130 - LIST OF REGULATED FLAMMABLE SUBSTANCES AND THRESHOLD QUANTITIES FOR ACCIDENTAL RELEASE PREVENTION
[CAS NUMBER ORDER - 63 SUBSTANCES]

CAS No.	Chemical Name	CAS No.	Threshold Quantity (lbs)	Basis for Listing
60-29-7	Ethyl ether [Ethane, 1,1'-oxybis-]	60-29-7	10,000	g
74-82-8	Methane	74-82-8	10,000	f
74-84-0	Ethane	74-84-0	10,000	f
74-85-1	Ethylene [Ethene]	74-85-1	10,000	f
74-86-2	Acetylene [Ethyne]	74-86-2	10,000	f
74-89-5	Methylamine [Methanamine]	74-89-5	10,000	f
74-98-6	Propane	74-98-6	10,000	f
74-99-7	Propyne [1-Propyne]	74-99-7	10,000	f
75-00-3	Ethyl chloride [Ethane, chloro-]	75-00-3	10,000	f
75-01-4	Vinyl chloride [Ethene, chloro-]	75-01-4	10,000	a, f
75-02-5	Vinyl fluoride [Ethene, fluoro-]	75-02-5	10,000	f
75-04-7	Ethylamine [Ethanamine]	75-04-7	10,000	f
75-07-0	Acetaldehyde	75-07-0	10,000	g
75-08-1	Ethyl mercaptan [Ethanethiol]	75-08-1	10,000	g
75-19-4	Cyclopropane	75-19-4	10,000	f
75-28-5	Isobutane [Propane, 2-methyl]	75-28-5	10,000	f
75-29-6	Isopropyl chloride [Propane, 2-chloro-]	75-29-6	10,000	g
75-31-0	Isopropylamine [2-Propanamine]	75-31-0	10,000	g
75-35-4	Vinylidene chloride [Ethene, 1,1-dichloro-]	75-35-4	10,000	g
75-37-6	Difluoroethane [Ethane, 1,1-difluoro-]	75-37-6	10,000	f
75-38-7	Vinylidene fluoride [Ethene, 1,1-difluoro-]	75-38-7	10,000	f
75-50-3	Trimethylamine [Methanamine, N,N-dimethyl-]	75-50-3	10,000	f
75-76-3	Tetramethylsilane [Silane, tetramethyl-]	75-76-3	10,000	g
78-78-4	Isopentane [Butane, 2-methyl-]	78-78-4	10,000	g
78-79-5	Isoprene [1,3-Butadiene, 2-methyl-]	78-79-5	10,000	g
79-38-9	Trifluorochloroethylene [Ethene, chlorotrifluoro-]	79-38-9	10,000	f

CAS No.	Chemical Name	CAS No.	Threshold Quantity (lbs)	Basis for Listing
106-97-8	Butane	106-97-8	10,000	f
106-98-9	1-Butene	106-98-9	10,000	f
106-99-0	1,3-Butadiene	106-99-0	10,000	f
107-00-6	Ethyl acetylene [1-Butyne]	107-00-6	10,000	f
107-01-7	2-Butene	107-01-7	10,000	f
107-25-5	Vinyl methyl ether [Ethene, methoxy-]	107-25-5	10,000	f
107-31-3	Methyl formate [Formic acid, methyl ester]	107-31-3	10,000	g
109-66-0	Pentane	109-66-0	10,000	g
109-67-1	1-Pentene	109-67-1	10,000	g
109-92-2	Vinyl ethyl ether [Ethene, ethoxy-]	109-92-2	10,000	g
109-95-5	Ethyl nitrite [Nitrous acid, ethyl ester]	109-95-5	10,000	f
115-07-1	Propylene [1-Propene]	115-07-1	10,000	f
115-10-6	Methyl ether [Methane, oxybis-]	115-10-6	10,000	f
115-11-7	2-Methylpropene [1-Propene, 2-methyl-]	115-11-7	10,000	f
116-14-3	Tetrafluoroethylene [Ethene, tetrafluoro-]	116-14-3	10,000	f
124-40-3	Dimethylamine [Methanamine, N-methyl-]	124-40-3	10,000	f
460-19-5	Cyanogen [Ethanedinitrile]	460-19-5	10,000	f
463-49-0	Propadiene [1,2-Propadiene]	463-49-0	10,000	f
463-58-1	Carbon oxysulfide [Carbon oxide sulfide (COS)]	463-58-1	10,000	f
463-82-1	2,2-Dimethylpropane [Propane, 2,2-dimethyl-]	463-82-1	10,000	f
504-60-9	1,3-Pentadiene	504-60-9	10,000	f
557-98-2	2-Chloropropylene [1-Propene, 2-chloro-]	557-98-2	10,000	g
563-45-1	3-Methyl-1-butene	563-45-1	10,000	f
563-46-2	2-Methyl-1-butene	563-46-2	10,000	g
590-18-1	2-Butene-cis	590-18-1	10,000	f
590-21-6	1-Chloropropylene [1-Propene, 1-chloro-]	590-21-6	10,000	g
598-73-2	Bromotrifluorethylene [Ethene, bromotrifluoro-]	598-73-2	10,000	f

CAS No.	Chemical Name	CAS No.	Threshold Quantity (lbs)	Basis for Listing
624-64-6	2-Butene-trans [2-Butene, (E)]	624-64-6	10,000	f
627-20-3	2-Pentene, (Z)-	627-20-3	10,000	g
646-04-8	2-Pentene, (E)-	646-04-8	10,000	g
689-97-4	Vinyl acetylene [1-Buten-3-yne]	689-97-4	10,000	f
1333-74-0	Hydrogen	1333-74-0	10,000	f
4109-96-0	Dichlorosilane [Silane, dichloro-]	4109-96-0	10,000	f
7791-21-1	Chlorine monoxide [Chlorine oxide]	7791-21-1	10,000	f
7803-62-5	Silane	7803-62-5	10,000	f
10025-78-2	Trichlorosilane [Silane, trichloro-]	10025-78-2	10,000	g
25167-67-3	Butene	25167-67-3	10,000	f

Basis for Listing:

[a]Mandated for listing by Congress.
[f]Flammable gas.
[g]Volatile flammable liquid.

3745-104-05 **Applicability.**

[Comment: For dates of non-regulatory government publications, publications of recognized organizations and associations, federal rules, and federal statutory provisions reference in this rule, see paragraph (C) of rule 3745-104-01 of the Administrative Code titled "Referenced materials."]

(A) An owner or operator of a stationary source that has more than a threshold quantity of a regulated substance in a process, as determined by rule 3745-104-02 of the Administrative Code, shall comply with the requirements of this rule no later than the latest of the following dates:

(1) June 21, 1999;

(2) Three years after the date on which a regulated substance is first listed under rule 3745-104-04 of the Administrative Code; or

(3) The date on which a regulated substance is first present at the facility above a threshold quantity in a process.

(B) Program one eligibility requirements. A covered process is eligible for program one requirements as provided in paragraph (B) of rule 3745-104-06 of the Administrative Code if it meets all of the following requirements:

(1) For the five years prior to the submission of an RMP, the process has not had an accidental release of a regulated substance where exposure to the substance, its reaction products, overpressure generated by an explosion involving the substance, or radiant heat generated by a fire involving the substance led to any of the following offsite:

(a) Death;

(b) Injury; or

(c) Response or restoration activities for an exposure of an environmental receptor.

(2) The distance to a toxic or flammable endpoint for a worst-case release assessment conducted under rules 3745-104-08, 3745-104-09, and 3745-104-10 of the Administrative Code is less than the distance to any public receptor, as defined in paragraph (B)(33) of rule 3745-104-01 of the Administrative Code; and

(3) Emergency response procedures have been coordinated between the stationary source and local emergency planning and response organizations.

(C) Program two eligibility requirements. A covered process is subject to program two requirements if it does not meet the eligibility requirements of either paragraph (B) or (D) of this rule. A program two process shall comply with rules 3745-104-17 to 3745-104-23 of the Administrative Code to meet the prevention program requirements.

(D) Program three eligibility requirements. A covered process is subject to program three if the process does not meet the requirements of paragraph (B) of this rule, and if either of the following conditions is met:

(1) The process is in NAICS code 32211, 32411, 32511, 325181, 325188, 325192, 325199, 325211, 325311, or 32532; or

(2) The process is subject to the OSHA Process Safety Management Standard, 29 CFR 1910.119 as adopted by reference in rule 4167-3-01 of the Administrative Code.

Processes classified as program three as defined by paragraphs (D)(1) and (D)(2) of this rule shall comply with rules 3745-104-24 to 3745-104-35 of the Administrative Code to meet the prevention program requirements.

(E) If at any time a covered process no longer meets the eligibility criteria of its program level, the owner or operator shall comply with the requirements of the new program level that applies to the process and update the RMP as provided in rule 3745-104-49 of the Administrative Code.

Effective: 01/08/2010

R.C. 119.032 review dates: 10/22/2009 and 10/23/2014

CERTIFIED ELECTRONICALLY
Certification

12/29/2009
Date

Promulgated Under: 119.03
Statutory Authority: 3753.02
Rule Amplifies: 3753
Prior Effective Dates: 08/13/99, 07/01/05

3745-104-06 **General requirements.**

(A) General requirements. The owner or operator of a stationary source subject to this rule shall submit a single RMP, as provided in rules 3745-104-38 to 3745-104-48 of the Administrative Code. The RMP shall include a registration, as defined in rule 3745-104-42 of the Administrative Code, that reflects all covered processes.

(B) Program one requirements. In addition to meeting the requirements of paragraph (A) of this rule, the owner or operator of a stationary source with a process eligible for program one, as provided in paragraph (B) of rule 3745-104-05 of the Administrative Code, shall:

(1) Analyze the worst-case release scenario for the process(es), as provided in rule 3745-104-10 of the Administrative Code; document that the nearest public receptor is beyond the distance to a toxic or flammable endpoint defined in paragraph (A) of rule 3745-104-09 of the Administrative Code; and submit in the RMP the worst-case release scenario as provided in rule 3745-104-43 of the Administrative Code;

(2) Complete the five-year accident history for the process(es) as provided in rule 3745-104-16 of the Administrative Code and submit it in the RMP as provided in rule 3745-104-44 of the Administrative Code;

(3) Ensure that response actions have been coordinated with local emergency planning and response agencies; and

(4) Certify in the RMP the following: "Based on the criteria in rule 3745-104-05 of the Administrative Code, the distance to the specified endpoint for the worst-case accidental release scenario for the following process(es) is less than the distance to the nearest public receptor: [list process(es)]. Within the past five years, the process(es) has (have) had no accidental release that caused offsite impacts provided in the risk management program rule (paragraph (B)(1) of rule 3745-104-05 of the Administrative Code). No additional measures are necessary to prevent offsite impacts from accidental releases. In the event of fire, explosion, or a release of a regulated substance from the process(es), entry within the distance to the specified endpoints may pose a danger to public emergency responders. Therefore, public emergency responders should not enter this area except as arranged with the emergency contact indicated in the RMP. The undersigned certifies that, to the best of my knowledge, information, and belief, formed after reasonable inquiry, the information submitted is true, accurate, and complete. [Signature, title, date signed]."

(C) Program two requirements. In addition to meeting the requirements of paragraph (A) of this rule, the owner or operator of a stationary source with a process subject to

program two, as provided in paragraph (C) of rule 3745-104-05 of the Administrative Code, shall:

(1) Develop and implement a management system as provided in rule 3745-104-07 of the Administrative Code;

(2) Conduct a hazard assessment as provided in rules 3745-104-08 to 3745-104-16 of the Administrative Code;

(3) Implement the program two prevention steps provided in rules 3745-104-17 to 3745-104-23 of the Administrative Code or implement the program three prevention steps provided in rules 3745-104-24 to 3745-104-35 of the Administrative Code;

(4) Develop and implement an emergency response program as provided in rules 3745-104-36 and 3745-104-37 of the Administrative Code; and

(5) Submit as part of the RMP the data on prevention program elements for program two processes as provided in rule 3745-104-45 of the Administrative Code.

(D) Program three requirements. In addition to meeting the requirements of paragraph (A) of this rule, the owner or operator of a stationary source with a process subject to program three, as provided in paragraph (D) of rule 3745-104-05 of the Administrative Code shall:

(1) Develop and implement a management system as provided in rule 3745-104-07 of the Administrative Code;

(2) Conduct a hazard assessment as provided in rules 3745-104-08 to 3745-104-16 of the Administrative Code;

(3) Implement the prevention requirements of rules 3745-104-24 to 3745-104-35 of the Administrative Code;

(4) Develop and implement an emergency response program as provided in rules 3745-104-36 and 3745-104-37 of the Administrative Code; and

(5) Submit as part of the RMP the data on prevention program elements for program three processes as provided in rule 3745-104-46 of the Administrative Code.

R.C. 119.032 review dates: 10/23/2009 and 10/23/2014

CERTIFIED ELECTRONICALLY
Certification

10/23/2009
Date

Promulgated Under: 119.03
Statutory Authority: 3753.02
Rule Amplifies: 3753
Prior Effective Dates: 8/13/99

3745-104-07 **Management.**

(A) The owner or operator of a stationary source with processes subject to program two or program three shall develop a management system to oversee the implementation of the risk management program elements.

(B) The owner or operator shall assign a qualified person or position that has the overall responsibility for the development, implementation, and integration of the risk management program elements.

(C) When responsibility for implementing individual requirements of this part is assigned to persons other than the person identified under paragraph (B) of this rule, the names or positions of these people shall be documented and the lines of authority defined through an organization chart or similar document.

R.C. 119.032 review dates: 10/23/2009 and 10/23/2014

CERTIFIED ELECTRONICALLY
Certification

10/23/2009
Date

Promulgated Under: 119.03
Statutory Authority: 3753.02
Rule Amplifies: 3753
Prior Effective Dates: 8/13/99

3745-104-08 **Hazard assessment: applicability.**

The owner or operator of a stationary source subject to Chapter 3745-104 of the Administrative Code shall prepare a worst-case release scenario analysis as provided in rule 3745-104-10 of the Administrative Code and complete the five-year accident history as provided in rule 3745-104-16 of the Administrative Code. The owner or operator of a program two and three process must comply with all requirements of Chapter 3745-104 of the Administrative Code that are applicable to the process program level.

R.C. 119.032 review dates: 10/23/2009 and 10/23/2014

CERTIFIED ELECTRONICALLY
Certification

10/23/2009
Date

Promulgated Under: 119.03
Statutory Authority: 3753.02
Rule Amplifies: 3753
Prior Effective Dates: 8/13/99

3745-104-09 **Hazard assessment: offsite consequence analysis parameters.**

[Comment: For dates of non-regulatory government publications, publications of recognized organizations and associations, federal rules, and federal statutory provisions reference in this rule, see paragraph (C) of rule 3745-104-01 of the Administrative Code titled "Referenced materials."]

(A) Endpoints. For analyses of offsite consequences, the following endpoints shall be used:

(1) Toxics. The toxic endpoints provided in the appendix to this rule.

(2) Flammables. The endpoints for flammables vary according to the scenarios studied:

(a) Explosion. An overpressure of pounds per square inch.

(b) Radiant heat/exposure time. A radiant heat of five kilowatts per square meter for forty seconds.

(c) Lower flammability limit. A lower flammability limit as provided in NFPA documents or other generally recognized sources.

(B) Wind speed/atmospheric stability class. For the worst-case release analysis, the owner or operator shall use a wind speed of 1.5 meters per second and F atmospheric stability class. If the owner or operator can demonstrate that local meteorological data applicable to the stationary source show a higher minimum wind speed or less stable atmosphere at all times during the previous three years, these minimums may be used. For analysis of alternative scenarios, the owner or operator may use the typical meteorological conditions for the stationary source.

(C) Ambient temperature/humidity. For worst-case release analysis of a regulated toxic substance, the owner or operator shall use the highest daily maximum temperature in the previous three years and average humidity for the site, based on temperature/humidity data gathered at the stationary source or at a local meteorological station; an owner or operator using the "RMP Offsite Consequence Analysis Guidance" may use twenty-five degrees Celsius and fifty per cent humidity as values for these variables. For analysis of alternative scenarios, the owner or operator may use typical temperature/humidity data gathered at the stationary source or at a local meteorological station.

(D) Height of release. The worst-case release of a regulated toxic substance shall be analyzed assuming a ground level (zero feet) release. For an alternative scenario analysis of a regulated toxic substance, release height may be determined by the release scenario.

(E) The owner or operator shall use either urban or rural topography as applicable as defined in 40 CFR Part 51, Appendix W: "Guideline on Air Quality Modeling, section 8.2.8 Urban/Rural Classification."

(F) Dense or neutrally buoyant gases. The owner or operator shall ensure that tables or models used for dispersion analysis of regulated toxic substances account for gas density.

(G) Temperature of released substance. For worst case, liquids other than gases liquified by refrigeration only shall be considered to be released at the highest daily maximum temperature, based on data for the previous three years appropriate for the stationary source, or at process temperature, whichever is higher. For alternative scenarios, substances may be considered to be released at a process or ambient temperature that is appropriate for the scenario.

Effective: 01/08/2010

R.C. 119.032 review dates: 10/22/2009 and 10/23/2014

CERTIFIED ELECTRONICALLY
Certification

12/29/2009
Date

Promulgated Under: 119.03
Statutory Authority: 3753.02
Rule Amplifies: 3753
Prior Effective Dates: 08/13/99, 07/01/05

3745-104-09 Appendix
TABLE OF TOXIC ENDPOINTS

CAS No.	Chemical Name	Toxic Endpoint (mg/L)
107-02-8	Acrolein [2-Propenal]	0.0011
107-13-1	Acrylonitrile [2-Propenenitrile]	0.076
814-68-6	Acrylyl chloride [2-Propenoyl chloride]	0.00090
107-18-6	Allyl alcohol [2-Propen-1-ol]	0.036
107-11-9	Allylamine [2-Propen-1-amine]	0.0032
7664-41-7	Ammonia (anhydrous)	0.14
7664-41-7	Ammonia (conc 20% or greater)	0.14
7784-34-1	Arsenous trichloride	0.010
7784-42-1	Arsine	0.0019
10294-34-5	Boron trichloride [Borane, trichloro-]	0.010
7637-07-2	Boron trifluoride [Borane, trifluoro-]	0.028
353-42-4	Boron trifluoride compound with methyl ether (1:1) [Boron, trifluoro[oxybis[methane]]-, T-4	0.023
7726-95-6	Bromine	0.0065
75-15-0	Carbon disulfide	0.16
7782-50-5	Chlorine	0.0087
10049-04-4	Chlorine dioxide [Chlorine oxide (ClO2)]	0.0028
67-66-3	Chloroform [Methane, trichloro-]	0.49
542-88-1	Chloromethyl ether [Methane, oxybis[chloro-]	0.00025
107-30-2	Chloromethyl methyl ether [Methane, chloromethoxy-]	0.0018
4170-30-3	Crotonaldehyde [2-Butenal]	0.029
123-73-9	Crotonaldehyde, (E)- [2-Butenal, (E)-]	0.029
506-77-4	Cyanogen chloride	0.030
108-91-8	Cyclohexylamine [Cyclohexanamine]	0.16
19287-45-7	Diborane	0.0011
75-78-5	Dimethyldichlorosilane [Silane, dichlorodimethyl-]	0.026

57-14-7	1,1-Dimethylhydrazine [Hydrazine, 1,1-dimethyl-]	0.012
106-89-8	Epichlorohydrin [Oxirane, (chloromethyl)-]	0.076
107-15-3	Ethylenediamine [1,2-Ethanediamine]	0.49
151-56-4	Ethyleneimine [Aziridine]	0.018
75-21-8	Ethylene oxide [Oxirane]	0.090
7782-41-4	Fluorine	0.0039
50-00-0	Formaldehyde (solution)	0.012
110-00-9	Furan	0.0012
302-01-2	Hydrazine	0.011
7647-01-0	Hydrochloric acid (conc 30% or greater)	0.030
74-90-8	Hydrocyanic acid	0.011
7647-01-0	Hydrogen chloride (anhydrous) [Hydrochloric acid]	0.030
7664-39-3	Hydrogen fluoride/Hydrofluoric acid (conc 50% or greater) [Hydrofluoric acid]	0.016
7783-07-5	Hydrogen selenide	0.00066
7783-06-4	Hydrogen sulfide	0.042
13463-40-6	Iron, pentacarbonyl- [Iron carbonyl (Fe(CO)5), (TB-5-11)-]	0.00044
78-82-0	Isobutyronitrile [Propanenitrile, 2-methyl-]	0.14
108-23-6	Isopropyl chloroformate [Carbonochloridic acid, 1-methylethyl ester]	0.10
126-98-7	Methacrylonitrile [2-Propenenitrile, 2-methyl-]	0.0027
74-87-3	Methyl chloride [Methane, chloro-]	0.82
79-22-1	Methyl chloroformate [Carbonochloridic acid, methylester]	0.0019
60-34-4	Methyl hydrazine [Hydrazine, methyl-]	0.0094
624-83-9	Methyl isocyanate [Methane, isocyanato-]	0.0012
74-93-1	Methyl mercaptan [Methanethiol]	0.049
556-64-9	Methyl thiocyanate [Thiocyanic acid, methyl ester]	0.085
75-79-6	Methyltrichlorosilane [Silane, trichloromethyl-]	0.018
13463-39-3	Nickel carbonyl	0.00067
7697-37-2	Nitric acid (conc 80% or greater)	0.026
10102-43-9	Nitric oxide [Nitrogen oxide (NO)]	0.031
8014-95-7	Oleum (Fuming Sulfuric acid) [Sulfuric acid, mixture with sulfur trioxide]	0.010
79-21-0	Peracetic acid [Ethaneperoxoic acid]	0.0045
594-42-3	Perchloromethylmercaptan [Methanesulfenyl chloride, trichloro-]	0.0076

75-44-5	Phosgene [Carbonic dichloride]	0.00081
7803-51-2	Phosphine	0.0035
10025-87-3	Phosphorus oxychloride [Phosphoryl chloride]	0.0030
7719-12-2	Phosphorus trichloride [Phosphorous trichloride]	0.028
110-89-4	Piperidine	0.022
107-12-0	Propionitrile [Propanenitrile]	0.0037
109-61-5	Propyl chloroformate [Carbonochloridic acid, propylester]	0.010
75-55-8	Propyleneimine [Aziridine, 2-methyl-]	0.12
75-56-9	Propylene oxide [Oxirane, methyl-]	0.59
7446-09-5	Sulfur dioxide (anhydrous)	0.0078
7783-60-0	Sulfur tetrafluoride [Sulfur fluoride (SF4), (T-4)-]	0.0092
7446-11-9	Sulfur trioxide	0.010
75-74-1	Tetramethyllead [Plumbane, tetramethyl-]	0.0040
509-14-8	Tetranitromethane [Methane, tetranitro-]	0.0040
7550-45-0	Titanium tetrachloride [Titanium chloride (TiCl4) (T-4)-]	0.020
584-84-9	Toluene 2,4-diisocyanate [Benzene, 2,4-diisocyanato-1-methyl-]	0.0070
91-08-7	Toluene 2,6-diisocyanate [Benzene, 1,3-diisocyanato-2-methyl-]	0.0070
26471-62-5	Toluene diisocyanate (unspecified isomer) [Benzene, 1,3-diisocyanatomethyl-]	0.0070
75-77-4	Trimethylchlorosilane [Silane, chlorotrimethyl-]	0.050
108-05-4	Vinyl acetate monomer [Acetic acid ethenyl ester]	0.26

3745-104-10 **Hazard assessment: worst-case release scenario analysis.**

[Comment: For dates of non-regulatory government publications, publications of recognized organizations and associations, federal rules, and federal statutory provisions referenced in this rule, see paragraph (C) of rule 3745-104-01 of the Administrative Code titled "Referenced materials."]

(A) The owner or operator shall analyze and report in the RMP:

(1) For program one processes, one worst-case release scenario for each program one process;

(2) For program two and three processes:

(a) One worst-case release scenario that is estimated to create the greatest distance in any direction to an endpoint provided in the appendix to rule 3745-104-09 of the Administrative Code resulting from an accidental release of regulated toxic substances from covered processes under worst-case conditions defined in rule 3745-104-09 of the Administrative Code;

(b) One worst-case release scenario that is estimated to create the greatest distance in any direction to an endpoint defined in paragraph (A) of rule 3745-104-09 of the Administrative Code resulting from an accidental release of regulated flammable substances from covered processes under worst-case conditions defined in rule 3745-104-09 of the Administrative Code; and

(c) Additional worst-case release scenarios shall be reported if a worst-case release from another covered process(es) at the stationary source potentially affects public receptors different from those potentially affected by the worst-case release scenario developed under paragraph (A)(2)(a) or (A)(2)(b) of this rule.

(B) Determination of worst-case release quantity. The worst-case release quantity shall be the greater of the following:

(1) For substances in a vessel, the greatest amount held at any time in a single vessel, taking into account administrative controls that limit the maximum quantity; or

(2) For substances in pipes, the greatest amount at any time in a pipe, taking into account administrative controls that limit the maximum quantity.

(C) Worst-case release scenario: toxic gases.

(1) For regulated toxic substances that are normally gases at ambient temperature and handled as either a gas or handled as a liquid under pressure, the owner or operator shall assume that the quantity in the vessel or pipe, as determined under paragraph (B) of this rule, is released as a gas over ten minutes. The release rate shall be assumed to be the total quantity divided by ten unless passive mitigation systems are in place at the covered process.

(2) For gases handled as refrigerated liquids at ambient pressure:

(a) If the released substance is not contained by passive mitigation systems or if the release is contained and the contained pool would have a depth of one centimeter or less, the owner or operator shall assume that the substance is released as a gas in ten minutes;

(b) If the released substance is contained by passive mitigation systems in a pool with a depth greater than one centimeter, the owner or operator may assume that the quantity in the vessel or pipe, as determined under paragraph (B) of this rule, is spilled instantaneously to form a liquid pool. The release rate shall be calculated at the boiling point of the substance and at the conditions specified in paragraph (D) of this rule.

(D) Worst-case release scenario: toxic liquids.

(1) For regulated toxic substances that are normally liquids at ambient temperature, the owner or operator shall assume that the quantity in the vessel or pipe, as determined under paragraph (B) of this rule, is spilled instantaneously to form a liquid pool.

(a) The surface area of the pool shall be determined by assuming that the liquid spreads to one centimeter deep unless passive mitigation systems are in place at the covered process that serve to contain the spill and limit the surface area. Where passive mitigation is in place, the surface area of the contained liquid shall be used to calculate the volatilization rate.

(b) If the release would occur onto a surface that is not paved or smooth, the owner or operator may take into account the actual surface characteristics.

(2) The volatilization rate shall account for the highest daily maximum temperature occurring in the past three years, the temperature of the substance in the vessel, and the concentration of the substance if the liquid spilled is a mixture or solution.

(3) The rate of release to air shall be determined from the volatilization rate of the liquid pool. The owner or operator may use the methodology in the "RMP Offsite Consequence Analysis Guidance" or any other publicly available techniques that account for the modeling conditions and are recognized by

industry as applicable as part of current practices. Proprietary models that account for the modeling conditions may be used provided the owner or operator allows the director or the director's representative access to the model and describes model features and differences from publicly available models to local emergency planners upon request.

(E) Worst-case release scenario: flammable gases. The owner or operator shall assume that the quantity of the substance, as determined under paragraph (B) of this rule and the provisions below, vaporizes resulting in a vapor cloud explosion. A yield factor of ten per cent of the available energy released in the explosion shall be used to determine the distance to the explosion endpoint if the model used is based on TNT equivalent methods.

(1) For regulated flammable substances that are normally gases at ambient temperature and handled as a gas or as a liquid under pressure, the owner or operator shall assume that the quantity in the vessel or pipe, as determined under paragraph (B) of this rule, is released as a gas over ten minutes. The total quantity shall be assumed to be involved in the vapor cloud explosion.

(2) For flammable gases handled as refrigerated liquids at ambient pressure:

(a) If the released substance is not contained by passive mitigation systems or if the contained pool would have a depth of one centimeter or less, the owner or operator shall assume that the total quantity of the substance is released as a gas in ten minutes, and the total quantity will be involved in the vapor cloud explosion.

(b) If the released substance is contained by passive mitigation systems in a pool with a depth greater than one centimeter, the owner or operator may assume that the quantity in the vessel or pipe, as determined under paragraph (B) of this rule, is spilled instantaneously to form a liquid pool. The volatilization rate (release rate) shall be calculated at the boiling point of the substance and at the conditions specified in paragraph (D) of this rule. The owner or operator shall assume that the quantity which becomes vapor in the first ten minutes is involved in the vapor cloud explosion.

(F) Worst-case release scenario: flammable liquids. The owner or operator shall assume that the quantity of the substance, as determined under paragraph (B) of this rule and the provisions below, vaporizes resulting in a vapor cloud explosion. A yield factor of ten per cent of the available energy released in the explosion shall be used to determine the distance to the explosion endpoint if the model used is based on TNT equivalent methods.

(1) For regulated flammable substances that are normally liquids at ambient temperature, the owner or operator shall assume that the entire quantity in the vessel or pipe, as determined under paragraph (B) of this rule, is spilled

instantaneously to form a liquid pool. For liquids at temperatures below their atmospheric boiling point, the volatilization rate shall be calculated at the conditions specified in paragraph (D) of this rule.

(2) The owner or operator shall assume that the quantity which becomes vapor in the first ten minutes is involved in the vapor cloud explosion.

(G) Parameters to be applied for all covered processes. The owner or operator shall use the parameters defined in rule 3745-104-09 of the Administrative Code to determine distance to the endpoints. The owner or operator may use the methodology provided in the "RMP Offsite Consequence Analysis Guidance" or any commercially or publicly available air dispersion modeling techniques, provided the techniques account for the modeling conditions and are recognized by industry as applicable as part of current practices. Proprietary models that account for the modeling conditions may be used provided the owner or operator allows the director or the director's representative access to the model and describes model features and differences from publicly available models to local emergency planners upon request.

(H) Consideration of passive mitigation. Passive mitigation systems may be considered for the analysis of worst case provided that the mitigation system can withstand the release event triggering the scenario and would still function as intended.

(I) Factors in selecting a worst-case scenario. The owner or operator shall select as the worst case for flammable regulated substances or the worst case for regulated toxic substances, a scenario that would result in a greater distance to an endpoint, as defined in paragraph (A) of rule 3745-104-09 of the Administrative Code, beyond the stationary source boundary. These scenarios shall be based on the following:

(1) Determination of worst-case release quantity as defined in paragraphs (B)(1) and (B)(2) of this rule;

(2) Smaller quantities handled at higher process temperature or pressure; and

(3) Proximity to the boundary of the stationary source.

Effective: 01/08/2010

R.C. 119.032 review dates: 10/22/2009 and 10/23/2014

CERTIFIED ELECTRONICALLY
Certification

12/29/2009
Date

Promulgated Under: 119.03
Statutory Authority: 3753.02
Rule Amplifies: 3753
Prior Effective Dates: 8/13/99, 3/09/01, 7/01/05

3745-104-11 **Hazard assessment: alternative release scenario analysis.**

[Comment: For dates of non-regulatory government publications, publications of recognized organizations and associations, federal rules, and federal statutory provisions referenced in this rule, see paragraph (C) of rule 3745-104-01 of the Administrative Code titled "Referenced materials."]

(A) Number of scenarios. The owner or operator of a stationary source with processes subject to program two or program three shall identify and analyze at least one alternative release scenario for each regulated toxic substance held in a covered process and shall identify and analyze at least one alternative release scenario to represent all flammable substances held in covered processes.

(B) Scenarios to consider.

(1) For each scenario required under paragraph (A) of this rule, the owner or operator shall select a scenario:

(a) That is more likely to occur than the worst-case release scenario under rule 3745-104-10 of the Administrative Code; and

(b) That will reach an endpoint offsite, unless no such scenario exists.

(2) Release scenarios considered may include, but are not limited to, the following, where applicable:

(a) Transfer hose releases due to splits or sudden hose uncoupling;

(b) Process piping releases from failures at flanges, joints, welds, valves and valve seals, and drains or bleeds;

(c) Process vessel or pump releases due to cracks, seal failure, or drain, bleed, or plug failure;

(d) Vessel overfilling and spill, or overpressurization and venting through relief valves or rupture disks; and

(e) Shipping container mishandling and breakage or puncturing leading to a spill.

(C) Parameters to be applied. The owner or operator shall use the appropriate parameters defined in rule 3745-104-09 of the Administrative Code to determine distance to the endpoints. The owner or operator may use either the methodology provided in the "RMP Offsite Consequence Analysis Guidance" or any commercially or publicly available air dispersion modeling techniques, provided the techniques account for the

specified modeling conditions and are recognized by industry as applicable as part of current practices. Proprietary models that account for the modeling conditions may be used provided the owner or operator allows the director or the director's representative access to the model and describes model features and differences from publicly available models to local emergency planners upon request.

(D) Consideration of mitigation. Active and passive mitigation systems may be considered provided they can withstand the event that triggered the release and would still be functional.

(E) Factors in selecting scenarios. The owner or operator shall consider the following in selecting alternative release scenarios:

(1) The five-year accident history provided in rule 3745-104-16 of the Administrative Code; and

(2) Failure scenarios identified under rule 3745-104-18 or 3745-104-25 of the Administrative Code.

Effective: 01/08/2010

R.C. 119.032 review dates: 10/22/2009 and 10/23/2014

CERTIFIED ELECTRONICALLY
Certification

12/29/2009
Date

Promulgated Under: 119.03
Statutory Authority: 3753.02
Rule Amplifies: 3753
Prior Effective Dates: 8/13/99, 7/01/05

3745-104-12 **Hazard assessment: defining offsite impacts - population.**

(A) The owner or operator shall estimate in the RMP the population within a circle with its center at the point of the release and a radius determined by the distance to the endpoint defined in paragraph (A) of rule 3745-104-09 of the Administrative Code.

(B) Population to be defined. Population shall include residential population. The presence of institutions (schools, hospitals, prisons), parks and recreational areas, and major commercial, office, and industrial buildings shall be noted in the RMP.

(C) Data sources acceptable. The owner or operator shall use the most recent census data, or other updated information, to estimate the population potentially affected.

(D) Level of accuracy. Population shall be estimated to two significant digits.

R.C. 119.032 review dates: 10/23/2009 and 10/23/2014

CERTIFIED ELECTRONICALLY
Certification

10/23/2009
Date

Promulgated Under: 119.03
Statutory Authority: 3753.02
Rule Amplifies: 3753
Prior Effective Dates: 8/13/99

3745-104-13 **Hazard assessment: defining offsite impacts - environment.**

(A) The owner or operator shall list in the RMP environmental receptors within a circle with its center at the point of the release and a radius determined by the distance to the endpoint defined in paragraph (A) of rule 3745-104-09 of the Administrative Code.

(B) Data sources acceptable. The owner or operator shall rely on information provided on local US geological survey maps or on any data source containing USGS data to identify environmental receptors.

Effective: 01/08/2010

R.C. 119.032 review dates: 10/22/2009 and 10/23/2014

CERTIFIED ELECTRONICALLY
Certification

12/29/2009
Date

Promulgated Under: 119.03
Statutory Authority: 3753.02
Rule Amplifies: 3753
Prior Effective Dates: 8/13/99

3745-104-14 **Hazard assessment: review and update.**

(A) The owner or operator shall review and update the offsite consequence analyses at least once every five years.

(B) If changes in processes, quantities stored or handled, or any other aspect of the stationary source are expected to increase or decrease the distance to the endpoint by a factor of two or more, the owner or operator shall complete a revised analysis within six months of the change and submit to USEPA a revised risk management plan as provided in rule 3745-104-49 of the Administrative Code.

Effective: 01/08/2010

R.C. 119.032 review dates: 10/22/2009 and 10/23/2014

CERTIFIED ELECTRONICALLY
Certification

12/29/2009
Date

Promulgated Under: 119.03
Statutory Authority: 3753.02
Rule Amplifies: 3753
Prior Effective Dates: 8/13/99

3745-104-15 **Hazard assessment: documentation.**

The owner or operator shall maintain the following records on the offsite consequence analyses:

(A) For worst-case scenarios, a description of the vessel or pipeline and substance selected as worst case, assumptions and parameters used, and the rationale for selection; assumptions shall include use of any administrative controls and any passive mitigation that were assumed to limit the quantity that could be released. Documentation shall include the anticipated effect of the controls and mitigation on the release quantity and rate.

(B) For alternative release scenarios, a description of the scenarios identified, assumptions and parameters used, and the rationale for the selection of specific scenarios; assumptions shall include use of any administrative controls and any mitigation that were assumed to limit the quantity that could be released. Documentation shall include the effect of the controls and mitigation on the release quantity and rate.

(C) Documentation of estimated quantity released, release rate, and duration of release.

(D) Methodology used to determine distance to endpoints.

(E) Data used to estimate population and environmental receptors potentially affected.

R.C. 119.032 review dates: 10/23/2009 and 10/23/2014

CERTIFIED ELECTRONICALLY
Certification

10/23/2009
Date

Promulgated Under: 119.03
Statutory Authority: 3753.02
Rule Amplifies: 3753
Prior Effective Dates: 8/13/99

3745-104-16 **Hazard assessment: five-year accident history.**

[Comment: For dates of non-regulatory government publications, publications of recognized organizations and associations, federal rules, and federal statutory provisions referenced in this rule, see paragraph (C) of rule 3745-104-01 of the Administrative Code titled "Referenced materials."]

(A) The owner or operator shall include in the five-year accident history all accidental releases from covered processes that resulted in deaths, injuries, or significant property damage on site, or known offsite deaths, injuries, evacuations, sheltering in place, property damage, or environmental damage.

(B) Data required. For each accidental release included in the five year accident history, the owner or operator shall report the following information:

(1) Date, time, and approximate duration of the release;

(2) Chemical(s) released;

(3) Estimated quantity released in pounds and, for mixtures containing regulated toxic substances, percentage concentration by weight of the released regulated toxic substance in the liquid mixture;

(4) Five- or six-digit NAICS code that most closely corresponds to the process;

(5) The type of release event and its source;

(6) Weather conditions, if known;

(7) On-site impacts;

(8) Known offsite impacts;

(9) Initiating event and contributing factors if known;

(10) Whether offsite responders were notified if known; and

(11) Operational or process changes that resulted from investigation of the release and that have been made by the time this information is submitted in accordance with rule 3745-104-44 of the Administrative Code.

(C) Level of accuracy. Numerical estimates may be provided to two significant digits.

Effective: 01/08/2010

R.C. 119.032 review dates: 10/22/2009 and 10/23/2014

CERTIFIED ELECTRONICALLY
Certification

12/29/2009
Date

Promulgated Under: 119.03
Statutory Authority: 3753.02
Rule Amplifies: 3753
Prior Effective Dates: 8/13/99, 7/1/05

3745-104-17 **Program two prevention program: safety information.**

[Comment: For dates of non-regulatory government publications, publications of recognized organizations and associations, federal rules, and federal statutory provisions referenced in this rule, see paragraph (C) of rule 3745-104-01 of the Administrative Code titled "Referenced materials."]

(A) The owner or operator shall compile and maintain the following up-to-date safety information related to the regulated substances, processes, and equipment:

(1) Material safety data sheets that meet the requirements of 29 CFR 1910.1200(g);

(2) Maximum intended inventory of equipment in which the regulated substances are stored or processed;

(3) Safe upper and lower temperatures, pressures, flows, and compositions;

(4) Equipment specifications; and

(5) Codes and standards used to design, build, and operate the process.

(B) The owner or operator shall ensure that the process is designed in compliance with recognized and generally accepted good engineering practices. Compliance with federal or state regulations that address industry-specific safe design or with industry-specific design codes and standards may be used to demonstrate compliance with this paragraph.

(C) The owner or operator shall update the safety information if a major change occurs that makes the information inaccurate.

Effective: 01/08/2010

R.C. 119.032 review dates: 10/22/2009 and 10/23/2014

CERTIFIED ELECTRONICALLY
Certification

12/29/2009
Date

Promulgated Under: 119.03
Statutory Authority: 3753.02
Rule Amplifies: 3753
Prior Effective Dates: 8/13/99, 7/01/05

3745-104-18 **Program two prevention program: hazard review.**

(A) The owner or operator shall conduct a review of the hazards associated with the regulated substances, process, and procedures. The review shall identify the following:

(1) The hazards associated with the process and regulated substances;

(2) Opportunities for equipment malfunctions or human errors that could cause an accidental release;

(3) The safeguards used or needed to control the hazards or prevent equipment malfunction or human error; and

(4) Any steps used or needed to detect or monitor releases.

(B) The owner or operator may use checklists developed by persons or organizations knowledgeable about the process and equipment as a guide to conducting the review. For processes designed to meet industry standards or federal or state design rules, the hazard review shall, by inspecting all equipment, determine whether the process is designed, fabricated, and operated in accordance with the applicable standards or rules.

(C) The owner or operator shall document the results of the review and ensure that problems identified are resolved in a timely manner.

(D) The review shall be updated at least once every five years. The owner or operator shall also conduct reviews whenever a major change in the process occurs; all issues identified in the review shall be resolved before startup of the changed process.

R.C. 119.032 review dates: 10/23/2009 and 10/23/2014

CERTIFIED ELECTRONICALLY
Certification

10/23/2009
Date

Promulgated Under: 119.03
Statutory Authority: 3753.02
Rule Amplifies: 3753
Prior Effective Dates: 8/13/99

3745-104-19 **Program two prevention program: operating procedures.**

(A) The owner or operator shall prepare written operating procedures that provide clear instructions or steps for safely conducting activities associated with each covered process consistent with the safety information for that process. Operating procedures or instructions provided by equipment manufacturers or developed by persons or organizations knowledgeable about the process and equipment may be used as a basis for a stationary source's operating procedures.

(B) The procedures shall address the following:

(1) Initial startup;

(2) Normal operations;

(3) Temporary operations;

(4) Emergency shutdown and operations;

(5) Normal shutdown;

(6) Startup following a normal or emergency shutdown or a major change that requires a hazard review;

(7) Consequences of deviations and steps required to correct or avoid deviations; and

(8) Equipment inspections.

(C) The owner or operator shall ensure that the operating procedures are updated, if necessary, whenever a major change occurs and prior to startup of the changed process.

R.C. 119.032 review dates: 10/23/2009 and 10/23/2014

CERTIFIED ELECTRONICALLY
Certification

10/23/2009
Date

Promulgated Under: 119.03
Statutory Authority: 3753.02
Rule Amplifies: 3753
Prior Effective Dates: 8/13/99

3745-104-20 **Program two prevention program: training.**

(A) The owner or operator shall ensure that each employee presently operating a process, and each employee newly assigned to a covered process have been trained or tested competent in the operating procedures provided in rule 3745-104-19 of the Administrative Code that pertain to their duties. For those employees already operating a process on June 21, 1999, the owner or operator may certify in writing that the employee has the required knowledge, skills, and abilities to safely carry out the duties and responsibilities as provided in the operating procedures.

(B) Refresher training. Refresher training shall be provided at least every three years, and more often if necessary, to each employee operating a process to ensure that the employee understands and adheres to the current operating procedures of the process. The owner or operator, in consultation with the employees operating the process, shall determine the appropriate frequency of refresher training.

(C) The owner or operator may use training conducted under federal or state regulations or under industry-specific standards or codes or training conducted by covered process equipment vendors to demonstrate compliance with this rule to the extent that the training meets the requirements of this section.

(D) The owner or operator shall ensure that operators are trained in any updated or new procedures prior to startup of a process after a major change.

R.C. 119.032 review dates: 10/23/2009 and 10/23/2014

CERTIFIED ELECTRONICALLY
Certification

10/23/2009
Date

Promulgated Under: 119.03
Statutory Authority: 3753.02
Rule Amplifies: 3753
Prior Effective Dates: 8/13/99

3745-104-21 **Program two prevention program: maintenance.**

(A) The owner or operator shall prepare and implement procedures to maintain the on-going mechanical integrity of the process equipment. The owner or operator may use procedures or instructions provided by covered process equipment vendors or procedures in federal or state regulations or industry codes as the basis for stationary source maintenance procedures.

(B) The owner or operator shall train or cause to be trained each employee involved in maintaining the on-going mechanical integrity of the process. To ensure that the employee can perform the job tasks in a safe manner, each such employee shall be trained in the hazards of the process, in how to avoid or correct unsafe conditions, and in the procedures applicable to the employee's job tasks.

(C) Any maintenance contractor shall ensure that each contract maintenance employee is trained to perform the maintenance procedures developed under paragraph (A) of this rule.

(D) The owner or operator shall perform or cause to be performed inspections and tests on process equipment. Inspection and testing procedures shall follow recognized and generally accepted good engineering practices. The frequency of inspections and tests of process equipment shall be consistent with applicable manufacturers' recommendations, industry standards or codes, good engineering practices, and prior operating experience.

R.C. 119.032 review dates: 10/23/2009 and 10/23/2014

CERTIFIED ELECTRONICALLY
Certification

10/23/2009
Date

Promulgated Under: 119.03
Statutory Authority: 3753.02
Rule Amplifies: 3753
Prior Effective Dates: 8/13/99

3745-104-22 **Program two prevention program: compliance audits.**

(A) The owner or operator shall certify that they have evaluated compliance with the provisions of rules 3745-104-17 to 3745-104-23 of the Administrative Code at least every three years to verify that the procedures and practices developed under chapter 3745-104 of the Administrative Code are adequate and are being followed.

(B) The compliance audit shall be conducted by at least one person knowledgeable in the process.

(C) The owner or operator shall develop a report of the audit findings.

(D) The owner or operator shall promptly determine and document an appropriate response to each of the findings of the compliance audit and document that deficiencies have been corrected.

(E) The owner or operator shall retain the two most recent compliance audit reports. This requirement does not apply to any compliance audit report that is more than five years old.

R.C. 119.032 review dates: 10/23/2009 and 10/23/2014

CERTIFIED ELECTRONICALLY
Certification

10/23/2009
Date

Promulgated Under: 119.03
Statutory Authority: 3753.02
Rule Amplifies: 3753
Prior Effective Dates: 8/13/99

3745-104-23 **Program two prevention program: incident investigation.**

(A) The owner or operator shall investigate each incident which resulted in, or could reasonably have resulted in a catastrophic release.

(B) An incident investigation shall be initiated as promptly as possible, but not later than forty-eight hours following the incident.

(C) A summary shall be prepared at the conclusion of the investigation which includes at a minimum:

(1) Date of incident;

(2) Date investigation began;

(3) A description of the incident;

(4) The factors that contributed to the incident; and,

(5) Any recommendations resulting from the investigation.

(D) The owner or operator shall promptly address and resolve the investigation findings and recommendations. Resolutions and corrective actions shall be documented.

(E) The findings shall be reviewed with all affected personnel whose job tasks are affected by the findings.

(F) Investigation summaries shall be retained for five years.

R.C. 119.032 review dates: 10/23/2009 and 10/23/2014

CERTIFIED ELECTRONICALLY
Certification

10/23/2009
Date

Promulgated Under: 119.03
Statutory Authority: 3753.02
Rule Amplifies: 3753
Prior Effective Dates: 8/13/99

3745-104-24 **Program three prevention program: process safety information.**

[Comment: For dates of non-regulatory government publications, publications of recognized organizations and associations, federal rules, and federal statutory provisions referenced in this rule, see paragraph (C) of rule 3745-104-01 of the Administrative Code titled "Referenced materials."]

(A) In accordance with the schedule set forth in rule 3745-104-25 of the Administrative Code, the owner or operator shall complete a compilation of written process safety information before conducting any process hazard analysis required by rule 3745-104-25 of the Administrative Code. The compilation of written process safety information is to enable the owner or operator and the employees involved in operating the process to identify and understand the hazards posed by those processes involving regulated substances. This process safety information shall include information pertaining to the hazards of the regulated substances used or produced by the process, information pertaining to the technology of the process, and information pertaining to the equipment in the process.

(B) Information pertaining to the hazards of the regulated substances in the process. This information shall consist of at least the following:

(1) Toxicity information;

(2) Permissible exposure limits;

(3) Physical data;

(4) Reactivity data;

(5) Corrosivity data;

(6) Thermal and chemical stability data; and

(7) Hazardous effects of inadvertent mixing of different materials that could foreseeably occur. Note: Material safety data sheets meeting the requirements of 29 CFR 1910.1200(g) may be used to comply with this requirement to the extent they contain the information required by paragraph (B) of this rule.

(C) Information pertaining to the technology of the process.

(1) Information concerning the technology of the process shall include at least the following:

(a) Block flow diagram or simplified process flow diagram;

(b) Process chemistry;

(c) Maximum intended inventory;

(d) Safe upper and lower limits for such items as temperatures, pressures, flows or compositions; and

(e) An evaluation of the consequences of deviations.

(2) Where the original technical information no longer exists, such information may be developed in conjunction with the process hazard analysis in sufficient detail to support the analysis.

(D) Information pertaining to the equipment in the process.

(1) Information pertaining to the equipment in the process shall include:

(a) Materials of construction;

(b) Piping and instrument diagrams (P&ID's);

(c) Electrical classification;

(d) Relief system design and design basis;

(e) Ventilation system design;

(f) Design codes and standards employed;

(g) Material and energy balances for processes built after June 21, 1999; and

(h) Safety systems (including interlocks, detection or suppression systems).

(2) The owner or operator shall document that equipment complies with recognized and generally accepted good engineering practices.

(3) For existing equipment designed and constructed in accordance with codes, standards, or practices that are no longer in general use, the owner or operator shall determine and document that the equipment is designed, maintained, inspected, tested, and operating in a safe manner.

Effective: 01/08/2010

R.C. 119.032 review dates: 10/22/2009 and 10/23/2014

CERTIFIED ELECTRONICALLY
Certification

12/29/2009
Date

Promulgated Under: 119.03
Statutory Authority: 3753.02
Rule Amplifies: 3753
Prior Effective Dates: 8/13/99, 7/01/05

3745-104-25 **Program three prevention program: process hazard analysis.**

[Comment: For dates of non-regulatory government publications, publications of recognized organizations and associations, federal rules, and federal statutory provisions referenced in this rule, see paragraph (C) of rule 3745-104-01 of the Administrative Code titled "Referenced materials."]

(A) The owner or operator shall perform an initial process hazard analysis (hazard evaluation) on processes covered by this chapter. The process hazard analysis shall be appropriate to the complexity of the process and shall identify, evaluate, and control the hazards involved in the process. The owner or operator shall determine and document the priority order for conducting process hazard analyses based on a rationale which includes such considerations as extent of the process hazards, number of potentially affected employees, age of the process, and operating history of the process. The process hazard analysis shall be conducted as soon as possible, but not later than June 21, 1999. Process hazards analyses completed to comply with 29 CFR 1910.119(e) are acceptable to meet requirements of this paragraph as initial process hazards analyses. These process hazard analyses shall be updated and revalidated, based on their completion date.

(B) The owner or operator shall use one or more of the following methodologies that are appropriate to determine and evaluate the hazards of the process being analyzed.

(1) What - if;

(2) Checklist;

(3) What - if/checklist;

(4) Hazard and operability study (HAZOP);

(5) Failure mode and effects analysis (FMEA);

(6) Fault tree analysis; or

(7) An appropriate equivalent methodology.

(C) The process hazard analysis shall address:

(1) The hazards of the process;

(2) The identification of any previous incident which had a likely potential for catastrophic consequences.

(3) Engineering and administrative controls applicable to the hazards and their interrelationships such as appropriate application of detection methodologies to provide early warning of releases. Acceptable detection methods include process monitoring and control instrumentation with alarms, and detection hardware such as hydrocarbon sensors;

(4) Consequences of failure of engineering and administrative controls;

(5) Stationary source siting;

(6) Human factors; and

(7) A qualitative evaluation of a range of the possible safety and health effects of failure of controls.

(D) The process hazard analysis shall be performed by a team with expertise in engineering and process operations, and the team shall include at least one employee who has experience and knowledge specific to the process being evaluated. Also, one member of the team must be knowledgeable in the specific process hazard analysis methodology being used.

(E) The owner or operator shall establish a system to promptly address the team's findings and recommendations; assure that the recommendations are resolved in a timely manner and that the resolution is documented; document what actions are to be taken; complete actions as soon as possible; develop a written schedule of when these actions are to be completed; communicate the actions to operating, maintenance and other employees whose work assignments are in the process and who may be affected by the recommendations or actions.

(F) At least every five years after the completion of the initial process hazard analysis, the process hazard analysis shall be updated and revalidated by a team meeting the requirements in paragraph (D) of this rule, to assure that the process hazard analysis is consistent with the current process. Updated and revalidated process hazard analyses completed to comply with 29 CFR 1910.119(e) are acceptable to meet the requirements of this paragraph.

(G) The owner or operator shall retain process hazards analyses and updates or revalidations for each process covered by this section, as well as the documented resolution of recommendations described in paragraph (E) of this rule for the life of the process.

Effective: 01/08/2010

R.C. 119.032 review dates: 10/22/2009 and 10/23/2014

CERTIFIED ELECTRONICALLY
Certification

12/29/2009
Date

Promulgated Under: 119.03
Statutory Authority: 3753.02
Rule Amplifies: 3753
Prior Effective Dates: 8/13/99, 7/01/05

3745-104-26 **Program three prevention program: operating procedures.**

(A) The owner or operator shall develop and implement written operating procedures that provide clear instructions for safely conducting activities involved in each covered process consistent with the process safety information referenced in rule 3745-104-24 of the Administrative Code and shall address at least the following elements.

(1) Steps for each operating phase:

(a) Initial startup;

(b) Normal operations;

(c) Temporary operations;

(d) Emergency shutdown including the conditions under which emergency shutdown is required, and the assignment of shutdown responsibility to qualified operators to ensure that emergency shutdown is executed in a safe and timely manner.

(e) Emergency operations;

(f) Normal shutdown; and

(g) Startup following a turnaround, or after an emergency shutdown.

(2) Operating limits:

(a) Consequences of deviation; and

(b) Steps required to correct or avoid deviation.

(3) Safety and health considerations:

(a) Properties of, and hazards presented by, the chemicals used in the process;

(b) Precautions necessary to prevent exposure to any person, public receptor or environmental receptor, including engineering controls, administrative controls, and personal protective equipment;

(c) Control measures to be taken if physical contact or airborne exposure occurs;

(d) Quality control for raw materials and control of hazardous chemical inventory levels; and

(e) Any special or unique hazards of the process or regulated substance.

(4) Safety systems and their functions.

(B) Operating procedures shall be readily accessible to employees who work in or maintain a process.

(C) The operating procedures shall reflect current operating practice, including changes that result from changes in process chemicals, technology, and equipment, and changes to stationary sources. The owner or operator shall certify annually that these operating procedures are current and accurate.

(D) The owner or operator shall develop and implement safe work practices to provide for the control of hazards during operations and for the control over entrance into a stationary source by maintenance, contractor, laboratory, or other support personnel. These safe work practices shall apply to employees and contractor employees.

Effective: 01/08/2010

R.C. 119.032 review dates: 10/22/2009 and 10/23/2014

CERTIFIED ELECTRONICALLY
Certification

12/29/2009
Date

Promulgated Under: 119.03
Statutory Authority: 3753.02
Rule Amplifies: 3753
Prior Effective Dates: 8/13/99

3745-104-27 **Program three prevention program: training.**

(A) Initial training.

(1) Each employee presently involved in operating a process, and each employee before being involved in operating a newly assigned process, shall be trained in an overview of the process and in the operating procedures as specified in rule 3745-104-26 of the Administrative Code. The training shall include but not be limited to emphasis on the specific safety and health hazards, emergency operations including shutdown, and safe work practices applicable to the employee's job tasks.

(2) In lieu of initial training for those employees already involved in operating a process on June 21, 1999 an owner or operator may certify in writing that the employee has the required knowledge, skills, and abilities to safely carry out the duties and responsibilities as specified in the operating procedures.

(B) Refresher training. Refresher training shall be provided at least every three years, and more often if necessary, to each employee involved in operating a process to assure that the employee understands and adheres to the current operating procedures of the process.

(C) Training documentation. The owner or operator shall ascertain that each employee involved in operating a process has received and understood the training required by this rule. The owner or operator shall prepare a record which contains the identity of the employee, the date of training, and the means used to verify that the employee understood the training.

R.C. 119.032 review dates: 10/23/2009 and 10/23/2014

CERTIFIED ELECTRONICALLY
Certification

10/23/2009
Date

Promulgated Under: 119.03
Statutory Authority: 3753.02
Rule Amplifies: 3753
Prior Effective Dates: 8/13/99

3745-104-28 **Program three prevention program: mechanical integrity.**

(A) Application. Paragraphs (B) to (F) of this rule apply to the following process equipment:

(1) Pressure vessels and storage tanks;

(2) Piping systems (including piping components such as valves);

(3) Relief and vent systems and devices;

(4) Emergency shutdown systems;

(5) Controls (including monitoring devices and sensors, alarms, and interlocks); and

(6) Pumps.

(B) Written procedures. The owner or operator shall establish and implement written procedures to maintain the on-going integrity of process equipment.

(C) Training for process maintenance activities. The owner or operator shall train each employee involved in maintaining the on-going integrity of process equipment in an overview of that process and its hazards and in the procedures applicable to the employee's job tasks to assure that the employee can perform the job tasks in a safe manner.

(D) Inspection and testing.

(1) Inspections and tests shall be performed on process equipment.

(2) Inspection and testing procedures shall follow recognized and generally accepted good engineering practices.

(3) The frequency of inspections and tests of process equipment shall be consistent with applicable manufacturers' recommendations and good engineering practices, and more frequently if determined to be necessary by prior operating experience.

(4) The owner or operator shall document each inspection and test that has been performed on process equipment. The documentation shall identify the date of the inspection or test, the name of the person who performed the inspection or test, the serial number or other identifier of the equipment on which the inspection or test was performed, a description of the inspection or test performed, and the results of the inspection or test.

(E) Equipment deficiencies. The owner or operator shall correct deficiencies in equipment that are outside acceptable limits (defined by the process safety information in rule 3745-104-24 of the Administrative Code) before further use or in a safe and timely manner when necessary means are taken to assure safe operation.

(F) Quality assurance.

(1) In the construction of new plants and equipment, the owner or operator shall assure that equipment as it is fabricated is suitable for the process application for which it will be used.

(2) Appropriate checks and inspections shall be performed to assure that equipment is installed properly and consistent with design specifications and the manufacturer's instructions.

(3) The owner or operator shall assure that maintenance materials, spare parts and equipment are suitable for the process application for which they will be used.

Effective: 01/08/2010

R.C. 119.032 review dates: 10/22/2009 and 10/23/2014

CERTIFIED ELECTRONICALLY
Certification

12/29/2009
Date

Promulgated Under: 119.03
Statutory Authority: 3753.02
Rule Amplifies: 3753
Prior Effective Dates: 8/13/99

3745-104-29 **Program three prevention program: management of change.**

(A) The owner or operator shall establish and implement written procedures to manage changes, except for "replacements in kind", to process chemicals, technology, equipment, and procedures; and, changes to stationary sources that affect a covered process.

(B) The procedures shall include all of the following:

(1) The technical basis for the proposed change;

(2) Impact of change on safety and health;

(3) Modifications to operating procedures;

(4) Necessary time period for the change; and

(5) Authorization requirements for the proposed change.

(C) Employees, maintenance and contract employees whose job tasks will be affected by a change in the process shall be informed of, and trained in, the change prior to start-up of the process or affected part of the process.

(D) If a change covered by this paragraph results in a change in the process safety information required by rule 3745-104-24 of the Administrative Code, such information shall be updated accordingly.

(E) If a change covered by this paragraph results in a change in the operating procedures or practices required by rule 3745-104-26 of the Administrative Code, such procedures or practices shall be updated accordingly.

Effective: 01/08/2010

R.C. 119.032 review dates: 10/22/2009 and 10/23/2014

CERTIFIED ELECTRONICALLY
Certification

12/29/2009
Date

Promulgated Under: 119.03
Statutory Authority: 3753.02
Rule Amplifies: 3753
Prior Effective Dates: 8/13/99

3745-104-30 **Program three prevention program: pre-startup review.**

(A) The owner or operator shall perform a pre-startup safety review for new stationary sources and for modified stationary sources when the modification of the covered process is significant enough to require a change in the process safety information.

(B) The pre-startup safety review shall confirm that prior to the introduction of regulated substances to a process:

(1) Construction and equipment is in accordance with design specifications;

(2) Safety, operating, maintenance, and emergency procedures are in place and are adequate;

(3) For new stationary sources, a process hazard analysis has been performed and recommendations have been resolved or implemented before startup; and modified stationary sources meet the requirements contained in management of change, rule 3745-104-29 of the Administrative Code.

(4) Training of each employee involved in operating a process has been completed.

R.C. 119.032 review dates: 10/23/2009 and 10/23/2014

CERTIFIED ELECTRONICALLY
Certification

10/23/2009
Date

Promulgated Under: 119.03
Statutory Authority: 3753.02
Rule Amplifies: 3753
Prior Effective Dates: 8/13/99

3745-104-31 **Program three prevention program: compliance audits.**

(A) The owner or operator shall certify that he or she has evaluated compliance with the provisions of rules 3745-104-24 to 3745-104-35 of the Administrative Code at least every three years to verify that the procedures and practices are adequate and are being followed.

(B) The compliance audit shall be conducted by at least one person knowledgeable in the process.

(C) A report of the findings of the audit shall be developed.

(D) The owner or operator shall promptly determine and document an appropriate response to each of the findings of the compliance audit, and document that deficiencies have been corrected.

(E) The owner or operator shall retain the two most recent compliance audit reports.

R.C. 119.032 review dates: 10/23/2009 and 10/23/2014

CERTIFIED ELECTRONICALLY
Certification

10/23/2009
Date

Promulgated Under: 119.03
Statutory Authority: 3753.02
Rule Amplifies: 3753
Prior Effective Dates: 8/13/99

3745-104-32 **Program three prevention program: incident investigation.**

(A) The owner or operator shall investigate each incident that resulted in, or could reasonably have resulted in a catastrophic release of a regulated substance.

(B) An incident investigation shall be initiated as promptly as possible, but not later than forty-eight hours following the incident.

(C) An incident investigation team shall be established and consist of at least one person knowledgeable of the process involved, including a contract employee if the incident involved work of the contractor, and other persons with appropriate knowledge and experience of the process involved to thoroughly investigate and analyze the incident.

(D) A report shall be prepared at the conclusion of the investigation. The report shall include at a minimum:

(1) Date of incident;

(2) Date investigation began;

(3) A description of the incident;

(4) The factors that contributed to the incident; and,

(5) Any recommendations resulting from the investigation.

(E) The owner or operator shall establish a system to promptly address and resolve the incident report findings and recommendations. Resolutions and corrective actions shall be documented.

(F) The report shall be reviewed with all affected personnel whose job tasks are relevant to the incident findings, including contract employees where applicable.

(G) Incident investigation reports shall be retained for five years.

R.C. 119.032 review dates: 10/23/2009 and 10/23/2014

CERTIFIED ELECTRONICALLY
Certification

10/23/2009
Date

Promulgated Under: 119.03
Statutory Authority: 3753.02
Rule Amplifies: 3753
Prior Effective Dates: 8/13/99

3745-104-33 **Program three prevention program: employee participation.**

(A) The owner or operator shall develop a written plan of action regarding the implementation of the employee participation required by this rule.

(B) The owner or operator shall consult with employees and their representatives on the conduct and development of process hazards analyses and on the development of the other elements of process safety management in this rule.

(C) The owner or operator shall provide to employees and their representatives access to process hazard analyses and to all other information required to be developed under this rule.

R.C. 119.032 review dates: 10/23/2009 and 10/23/2014

CERTIFIED ELECTRONICALLY
Certification

10/23/2009
Date

Promulgated Under: 119.03
Statutory Authority: 3753.02
Rule Amplifies: 3753
Prior Effective Dates: 8/13/99

3745-104-34 **Program three prevention program: hot work permit.**

[Comment: For dates of non-regulatory government publications, publications of recognized organizations and associations, federal rules, and federal statutory provisions referenced in this rule, see paragraph (C) of rule 3745-104-01 of the Administrative Code titled "Referenced materials."]

(A) The owner or operator shall issue a hot work permit to be kept on file at the facility before hot work operations are conducted on or near a covered process.

(B) The permit shall document that the fire prevention and protection requirements in 29 CFR 1910.252(a) have been implemented prior to beginning the hot work operations; it shall indicate the date(s) authorized for hot work; and identify the object on which hot work is to be performed. The permit shall be kept on file at the facility until completion of the hot work operations.

Effective: 01/08/2010

R.C. 119.032 review dates: 10/22/2009 and 10/23/2014

CERTIFIED ELECTRONICALLY
Certification

12/29/2009
Date

Promulgated Under: 119.03
Statutory Authority: 3753.02
Rule Amplifies: 3753
Prior Effective Dates: 8/13/99, 7/01/05

3745-104-35 **Program three prevention program: contractors.**

(A) Application. This rule applies to contractors performing maintenance or repair, turnaround, major renovation, or specialty work on or adjacent to a covered process. It does not apply to contractors providing incidental services that do not influence process safety, such as janitorial work, food and drink services, laundry, delivery or other supply services.

(B) Owner or operator responsibilities.

(1) The owner or operator, prior to selecting a contractor, shall obtain and evaluate information regarding the contractor's safety performance and programs.

(2) The owner or operator shall inform the contractor of the known potential fire, explosion, or toxic release hazards related to the contractor's work and the process.

(3) The owner or operator shall explain to the contractor the applicable provisions of rules 3745-104-36 and 3745-104-37 of the Administrative Code.

(4) The owner or operator shall develop and implement safe work practices consistent with paragraph (D) of rule 3745-104-26 of the Administrative Code, to control the entrance, presence, and exit of the contractor and contract employees in covered process areas.

(5) The owner or operator shall periodically evaluate the performance of the contractor in fulfilling his or her obligations as specified in paragraph (C) of this rule.

(C) Contractor responsibilities.

(1) The contractor shall assure that each contract employee is trained in the work practices necessary to safely perform his or her job.

(2) The contractor shall assure that each contract employee is instructed in the known potential fire, explosion, or toxic release hazards related to his or her job and the process, and the applicable provisions of the emergency action plan.

(3) The contractor shall document that each contract employee has received and understood the training required by this section. The contractor shall prepare a record that contains the identity of the contract employee, the date of training, and the means used to verify that the employee understood the training.

(4) The contractor shall assure that each contract employee follows the safety rules of the stationary source including the safe work practices required by paragraph (D) of rule 3745-104-26 of the Administrative Code.

(5) The contractor shall advise the owner or operator of any unique hazards presented by the contractor's work, or of any hazards found by the contractor's work.

R.C. 119.032 review dates: 10/23/2009 and 10/23/2014

CERTIFIED ELECTRONICALLY
Certification

10/23/2009
Date

Promulgated Under: 119.03
Statutory Authority: 3753.02
Rule Amplifies: 3753
Prior Effective Dates: 8/13/99

3745-104-36 **Emergency response: applicability.**

[Comment: For dates of non-regulatory government publications, publications of recognized organizations and associations, federal rules, and federal statutory provisions referenced in this rule, see paragraph (C) of rule 3745-104-01 of the Administrative Code titled "Referenced materials."]

(A) Except as provided in paragraph (B) of this rule, the owner or operator of a stationary source with program two and program three processes shall comply with the requirements of rule 3745-104-37 of the Administrative Code.

(B) The owner or operator of a stationary source with program two and program three processes whose employees will not respond to accidental releases of regulated substances need not comply with rule 3745-104-37 of the Administrative Code provided that they meet all of the following:

(1) For stationary sources with any regulated toxic substance held in a process above the threshold quantity, the stationary source is included in the community emergency response plan developed under 42 USC 11003;

(2) For stationary sources with only regulated flammable substances held in a process above the threshold quantity, the owner or operator has coordinated response actions with the local fire department; and

(3) Appropriate mechanisms are in place to notify emergency responders when there is a need for a response.

Effective: 01/08/2010

R.C. 119.032 review dates: 10/22/2009 and 10/23/2014

CERTIFIED ELECTRONICALLY
Certification

12/29/2009
Date

Promulgated Under: 119.03
Statutory Authority: 3753.02
Rule Amplifies: 3753
Prior Effective Dates: 8/13/99, 7/01/05

3745-104-37 **Emergency response program.**

(A) The owner or operator shall develop and implement an emergency response program for the purpose of protecting public health and the environment. Such program shall include the following elements:

(1) An emergency response plan, which shall be maintained at the stationary source and contain at least the following elements:

(a) Procedures for informing the public and local emergency response agencies about accidental releases;

(b) Documentation of proper first-aid and emergency medical treatment necessary to treat accidental human exposures; and

(c) Procedures and measures for emergency response after an accidental release of a regulated substance;

(2) Procedures for the use of emergency response equipment and for its inspection, testing, and maintenance;

(3) Training for all employees in relevant procedures; and

(4) Procedures to review and update, as appropriate, the emergency response plan to reflect changes at the stationary source and ensure that employees are informed of changes.

(B) A written plan that complies with other federal contingency plan regulations or is consistent with the approach in the national response team's "Integrated Contingency Plan Guidance" ("One Plan") and that, among other matters, includes the elements provided in paragraph (A) of this rule, shall satisfy the requirements of this section if the owner or operator also complies with paragraph (C) of this rule.

(C) The emergency response plan developed under paragraph (A)(1) of this rule shall be coordinated with the community emergency response plan developed under section 3750.05 of the Revised Code or rules adopted thereunder. Upon request of the local emergency planning committee or emergency response officials, the owner or operator shall promptly provide to the local emergency response officials information necessary for developing and implementing the community emergency response plan.

R.C. 119.032 review dates: 10/23/2009 and 10/23/2014

CERTIFIED ELECTRONICALLY
Certification

10/23/2009
Date

Promulgated Under: 119.03
Statutory Authority: 3753.02
Rule Amplifies: 3753
Prior Effective Dates: 8/13/99

3745-104-38 **Risk management plan: submission.**

[Comment: For dates of non-regulatory government publications, publications of recognized organizations and associations, federal rules, and federal statutory provisions referenced in this rule, see paragraph (C) of rule 3745-104-01 of the Administrative Code titled "Referenced materials."]

(A) The owner or operator shall submit a single RMP that includes the information required by rules 3745-104-41 to 3745-104-48 of the Administrative Code for all covered processes. The RMP shall be submitted in a method and format to a central point as specified by USEPA as of the date of submission.

(B) The owner or operator shall submit the first RMP no later than the latest of the following:

(1) June 21, 1999;

(2) Three years after the date on which a regulated substance is first listed under 40 CFR Part 68, which is incorporated into rule 3745-104-04 of the Administrative Code; or

(3) The date on which a regulated substance is first present above a threshold quantity in a process.

A copy of the initial RMP shall also be submitted to Ohio EPA.

(C) The owner or operator for which an RMP was submitted before June 21, 2004, shall revise the RMP to include the information required by paragraphs (B)(6) and (B)(14) of rule 3745-104-42 of the Administrative Code by June 21, 2004 in the manner specified by USEPA prior to that date. Any such submission shall also include the information required by paragraph (B)(20) of rule 3745-104-42 of the Administrative Code (indicating that the submission is a correction to include the information required by paragraphs (B)(6) and (B)(14) of rule 3745-104-42 of the Administrative Code or an update under rule 3745-104-49 of the Administrative Code).

(D) Subsequent submissions of RMPs shall be in accordance with rule 3745-104-49 of the Administrative Code. A copy of subsequent submissions shall also be submitted to Ohio EPA, but only when the subsequent submission is being made in accordance with paragraphs (B)(2) to (B)(4), paragraph (B)(6), (B)(7), (C), or (D)(1) of rule 3745-104-49 of the Administrative Code.

(E) Nothing in these rules is intended to enlarge or diminish any rights the owner or operator may have to make a claim to USEPA for confidential business information for any such information contained in the RMP that is submitted to USEPA.

However, to secure confidential treatment of information in the RMP which is submitted to Ohio EPA, the owner or operator must seek protection of the information as a trade secret exclusively in the manner set forth in rules 3745-104-39 and 3745-104-40 of the Administrative Code.

(F) Procedures for asserting that information submitted in the RMP is entitled to protection as trade secret information are set forth in rules 3745-104-39 and 3745-104-40 of the Administrative Code.

Effective: 01/08/2010

R.C. 119.032 review dates: 10/22/2009 and 10/23/2014

CERTIFIED ELECTRONICALLY
Certification

12/29/2009
Date

Promulgated Under: 119.03
Statutory Authority: 3753.02
Rule Amplifies: 3753
Prior Effective Dates: 8/13/99, 3/09/01, 7/01/05

3745-104-39 **Assertation of claims of trade secret information.**

(A) Except as provided in paragraph (B) of this rule, an owner or operator of a stationary source required to report or otherwise provide information under this chapter may make a claim for trade secret protection for any such information. Such information shall be designated trade secret only after the director, pursuant to rule 3745-49-03 of the Administrative Code, determines that the information meets the definition of trade secret as defined by section 1333.61 of the Revised Code.

(B) Notwithstanding the provisions of rule 3745-49-03 of the Administrative Code, an owner or operator may not claim as a trade secret the following information:

(1) Registration required by paragraphs (B)(1) to (B)(6), (B)(8) and (B)(10) to (B)(13) of rule 3745-104-42 of the Administrative Code and NAICS code and program level of the process set forth in paragraph (B)(7) of rule 3745-104-42 of the Administrative Code.

(2) Offsite consequence analysis data required by paragraphs (B)(4) and (B)(9) to (B)(12) of rule 3745-104-43 of the Administrative Code.

(3) Accident history data required by rule 3745-104-44 of the Administrative Code.

(4) Prevention program data required by paragraphs (A)(1), (A)(3), and (A)(5) to (A)(11) of rule 3745-104-45 of the Administrative Code and the date of the most recent hazard review or update set for in paragraph (A)(4) of rule 3745-104-45 of the Administrative Code.

(5) Prevention program data required by paragraphs (A)(1), (A)(3), and (A)(5) to (A)(15) of rule 3745-104-46 of the Administrative Code and the date of completion of the most recent process hazard analysis or update set for in paragraph (A)(4) of rule 3745-104-46 of the Administrative Code.

(6) Emergency response program data required by rule 3745-104-47 of the Administrative Code.

(C) Notwithstanding the procedures specified in rule 3745-49-03 of the Administrative Code, and subject to all other requirements of this rule, an owner or operator asserting a claim for trade secret protection with respect to information contained in its RMP shall submit to Ohio EPA, at the time it submits the RMP, the following:

(1) The information claimed as trade secret, provided in a format to be specified by Ohio EPA.

(2) A sanitized (redacted) copy of the RMP, with the notation "trade secret" substituted for the information claimed as trade secret, except that a generic

category or class name shall be substituted for any chemical name or identity claimed confidential.

(3) The document or documents substantiating each claims of trade secret information as described in rule 3745-104-40 of the Administrative Code.

Effective: 08/14/2015

Five Year Review (FYR) Dates: 05/28/2015 and 04/10/2020

CERTIFIED ELECTRONICALLY
Certification

08/04/2015
Date

Promulgated Under: 119.03
Statutory Authority: 3753.02
Rule Amplifies: 3753
Prior Effective Dates: 8/13/99, 1/8/10

3745-104-40 **Substantiating trade secret information.**

(A) An owner or operator claiming that information is trade secret information must substantiate that claim by providing documentation that demonstrates that the claim meets the criteria set forth in section 1333.61 of the Revised Code, as amended.

(B) Information that is submitted as part of the substantiation may by claimed trade secret by marking it as trade secret. Information not so marked will be treated as public and may be disclosed without notice to the owner or operator. If information that is submitted as part of the substantiation is claimed as trade secret, the owner or operator must provide a sanitized and unsanitized version of the substantiation.

(C) The owner, operator, or senior official with management responsibility of the stationary source shall sign a certification that the signer has personally examined the information submitted and that based on inquiry of the persons who compiled the information, the information is true, accurate, and complete, and that those portions of the substantiation claimed as trade secret would, if disclosed, reveal trade secrets.

R.C. 119.032 review dates: 10/23/2009 and 10/23/2014

CERTIFIED ELECTRONICALLY
Certification

10/23/2009
Date

Promulgated Under: 119.03
Statutory Authority: 3753.02
Rule Amplifies: 3753
Prior Effective Dates: 8/13/99

3745-104-41 **Risk management plan: executive summary.**

The owner or operator shall provide in the RMP an executive summary that includes a brief description of the following elements:

(A) The accidental release prevention and emergency response policies at the stationary source;

(B) The stationary source and regulated substances handled;

(C) The worst-case release scenario(s) and the alternative release scenario(s), including administrative controls and mitigation measures to limit the distances for each reported scenario;

(D) The five-year accident history;

(E) The emergency response program; and

(F) Planned changes to improve safety.

R.C. 119.032 review dates: 10/23/2009 and 10/23/2014

CERTIFIED ELECTRONICALLY
Certification

10/23/2009
Date

Promulgated Under: 119.03
Statutory Authority: 3753.02
Rule Amplifies: 3753
Prior Effective Dates: 8/13/99, 7/1/05

3745-104-42 **Risk management plan: registration.**

[Comment: For dates of non-regulatory government publications, publications of recognized organizations and associations, federal rules, and federal statutory provisions referenced in this rule, see paragraph (C) of rule 3745-104-01 of the Administrative Code titled "Referenced materials."]

(A) The owner or operator shall complete a single registration form as required by USEPA and include it in the RMP. The form shall cover all regulated substances handled in covered processes.

(B) The registration form shall include the following data:

(1) Stationary source name, street, city, county, state, zip code, latitude, and longitude, method for obtaining latitude and longitude, and description of location that latitude and longitude represent;

(2) The stationary source Dun and Bradstreet number;

(3) Name and Dun and Bradstreet number of all corporate parents;

(4) The name, telephone number, and mailing address of the owner or operator;

(5) The name and title of the person or position with overall responsibility for RMP elements and implementation, and (optional) the e-mail address for that person or position;

(6) The name, title, telephone number, and twenty-four hour telephone number, and, as of June 21, 2004, the e-mail address (if an e-mail address exists) of the emergency contact;

(7) For each covered process, the name and CAS number of each regulated substance held above the threshold quantity in the process, the maximum quantity of each regulated substance or mixture in the process (in pounds) to two significant digits, the five- or six-digit NAICS code that most closely corresponds to the process, and the program level of the process;

(8) The stationary source USEPA identifier;

(9) The number of full-time employees at the stationary source;

(10) Whether the stationary source is subject to OSHA's process safety management (29 CFR 1910.119) as adopted by reference in rule 4167-3-01 of the Administrative Code;

(11) Whether the stationary source is subject to 40 CFR Part 355 or section 3750.05 of the Revised Code and rules adopted thereunder;

(12) Whether the stationary source has a CAA Title V operating permit; and

(13) The date of the last safety inspection of the stationary source by a federal, state, or local government agency and the identity of the inspecting entity;

(14) As of June 21, 2004, the name, the mailing address, and the telephone number of the contractor who prepared the RMP (if any);

(15) Source or parent company e-mail address (optional);

(16) Source homepage address (optional);

(17) Phone number at the source for public inquiries (optional);

(18) Local emergency planning committee (optional);

(19) OSHA voluntary protection program status (optional); and

(20) As of June 21, 2004, the type and the reason for any changes being made to a previously submitted RMP; the types of changes to the RMP are categorized as follows:

(a) Updates and re-submissions required under paragraph (B) of rule 3745-104-49 of the Administrative Code;

(b) Corrections under paragraph (D) of rule 3745-104-49 of the Administrative Code or for purposes of correcting minor clerical errors, updating administrative information, providing missing data elements or reflecting facility ownership changes, and which do not require an update and re-submission as specified in paragraph (B) of rule 3745-104-49 of the Administrative Code;

(c) De-registrations required under paragraph (C) of rule 3745-104-49 of the Administrative Code; and

(d) Withdrawals of an RMP for any facility that was erroneously considered subject to this chapter.

Effective: 01/08/2010

R.C. 119.032 review dates: 10/22/2009 and 10/23/2014

CERTIFIED ELECTRONICALLY
Certification

12/29/2009
Date

Promulgated Under: 119.03
Statutory Authority: 3753.02
Rule Amplifies: 3753
Prior Effective Dates: 8/13/99, 7/01/05

3745-104-43 **Risk management plan: offsite consequence analysis.**

(A) The owner or operator shall submit in the RMP the following information:

(1) One worst-case release scenario for each program one process; and

(2) For program two and three processes, one worst-case release scenario to represent all regulated toxic substances held above the threshold quantity and one worst-case release scenario to represent all regulated flammable substances held above the threshold quantity. If additional worst-case scenarios for toxics or flammables are required by paragraph (A)(2)(c) of rule 3745-104-10 of the Administrative Code, the owner or operator shall submit the same information on the additional scenario(s). The owner or operator of program two and three processes shall also submit information on one alternative release scenario for each regulated toxic substance held above the threshold quantity and one alternative release scenario to represent all regulated flammable substances held above the threshold quantity.

(B) For each worst case release scenario and/or alternative release scenario required by paragraph (A) of this rule, the owner or operator shall submit the following data:

(1) Chemical name of the regulated substance;

(2) Percentage weight of the chemical in a liquid mixture (toxics only);

(3) Physical state of the regulated substance (toxics only);

(4) Basis of results (give model name if used);

(5) Scenario (explosion, fire, toxic gas release, or liquid spill and vaporization);

(6) Quantity released in pounds;

(7) Release rate;

(8) Release duration;

(9) Wind speed and atmospheric stability class (toxics only);

(10) Topography (toxics only);

(11) Distance to endpoint;

(12) Public and environmental receptors within the distance;

(13) Passive mitigation considered; and

(14) Active mitigation considered (alternative releases only).

R.C. 119.032 review dates: 10/23/2009 and 10/23/2014

CERTIFIED ELECTRONICALLY
Certification

10/23/2009
Date

Promulgated Under: 119.03
Statutory Authority: 3753.02
Rule Amplifies: 3753
Prior Effective Dates: 8/13/99

3745-104-44 **Risk management plan: five-year accident history.**

The owner or operator shall submit in the RMP the information provided in paragraph (B) of rule 3745-104-16 of the Administrative Code on each accident covered by paragraph (A) of rule 3745-104-16 of the Administrative Code.

R.C. 119.032 review dates: 10/23/2009 and 10/23/2014

CERTIFIED ELECTRONICALLY
Certification

10/23/2009
Date

Promulgated Under: 119.03
Statutory Authority: 3753.02
Rule Amplifies: 3753
Prior Effective Dates: 8/13/99

3745-104-45 **Risk management plan: prevention program/program 2.**

(A) For each program two process, the owner or operator shall provide in the RMP the information indicated in paragraphs (A)(1) to (A)(10) of this rule. If the same information applies to more than one covered process, the owner or operator may provide the information only once, but shall indicate to which processes the information applies.

(1) The five- or six-digit NAICS code that mostly closely corresponds to the process.

(2) The name(s) of the chemical(s) covered.

(3) The date of the most recent review or revision of the safety information required by rule 3745-104-17 of the Administrative Code and a list of federal or state regulations or industry-specific design codes and standards used to demonstrate compliance with the safety information requirement.

(4) The date of completion of the most recent hazard review or update and for each such review the RMP shall contain:

(a) The expected date of completion of any changes resulting from the hazard review;

(b) Major hazards identified;

(c) Process controls in use;

(d) Mitigation systems in use;

(e) Monitoring and detection systems in use; and

(f) Changes since the last hazard review.

(5) The date of the most recent review or revision of operating procedures.

(6) The date of the most recent review or revision of training programs;

(a) The type of training provided - classroom, classroom plus on the job, on the job; and

(b) The type of competency testing used.

(7) The date of the most recent review or revision of maintenance procedures and the date of the most recent equipment inspection or test and the equipment inspected or tested.

(8) The date of the most recent compliance audit and the expected date of completion of any changes resulting from the compliance audit.

(9) The date of the most recent incident investigation and the expected date of completion of any changes resulting from the investigation.

(10) The date of the most recent change that triggered a review or revision of safety information, the hazard review, operating or maintenance procedures, or training.

R.C. 119.032 review dates: 10/23/2009 and 10/23/2014

CERTIFIED ELECTRONICALLY
Certification

10/23/2009
Date

Promulgated Under: 119.03
Statutory Authority: 3753.02
Rule Amplifies: 3753
Prior Effective Dates: 8/13/99

3745-104-46 **Risk management plan: prevention program/program three.**

(A) For each program three process, the owner or operator shall provide the information indicated in paragraphs (A)(1) to (A)(15) of this rule. If the same information applies to more than one covered process, the owner or operator may provide the information only once, but shall indicate to which processes the information applies.

(1) The five- or six-digit NAICS code that most closely corresponds to the process.

(2) The name(s) of the substance(s) covered.

(3) The date on which the safety information was last reviewed or revised.

(4) The date of completion of the most recent process hazard analysis as defined in rule 3745-104-25 of the Administrative Code or update and the technique used.

(a) The expected date of completion of any changes resulting from the process hazard analysis as defined in rule 3745-104-25 of the Administrative Code;

(b) Major hazards identified;

(c) Process controls in use;

(d) Mitigation systems in use;

(e) Monitoring and detection systems in use; and

(f) Changes since the last process hazard analysis as defined in rule 3745-104-25 of the Administrative Code.

(5) The date of the most recent review or revision of operating procedures.

(6) The date of the most recent review or revision of training programs;

(a) The type of training provided - classroom, classroom plus on the job, on the job; and

(b) The type of competency testing used.

(7) The date of the most recent review or revision of maintenance procedures and the date of the most recent equipment inspection or test and the equipment inspected or tested.

(8) The date of the most recent change that triggered management of change procedures and the date of the most recent review or revision of management of change procedures.

(9) The date of the most recent pre-startup review.

(10) The date of the most recent compliance audit and the expected date of completion of any changes resulting from the compliance audit;

(11) The date of the most recent incident investigation and the expected date of completion of any changes resulting from the investigation;

(12) The date of the most recent review or revision of employee participation plans;

(13) The date of the most recent review or revision of hot work permit procedures;

(14) The date of the most recent review or revision of contractor safety procedures; and

(15) The date of the most recent evaluation of contractor safety performance.

R.C. 119.032 review dates: 10/23/2009 and 10/23/2014

CERTIFIED ELECTRONICALLY
Certification

10/23/2009
Date

Promulgated Under: 119.03
Statutory Authority: 3753.02
Rule Amplifies: 3753
Prior Effective Dates: 8/13/99

3745-104-47 **Risk management plan: emergency response program.**

(A) The owner or operator shall provide in the RMP the following information:

(1) Do you have a written emergency response plan?

(2) Does the plan include specific actions to be taken in response to an accidental release of a regulated substance?

(3) Does the plan include procedures for informing the public and local agencies responsible for responding to accidental releases?

(4) Does the plan include information on emergency health care?

(5) The date of the most recent review or update of the emergency response plan;

(6) The date of the most recent emergency response training for employees.

[Note: The owner or operator may provide yes/no answers for paragraphs (A)(1) to (A)(4) of this rule.]

(B) The owner or operator shall provide the name and telephone number of the local agency with which emergency response activities and the emergency response plan is coordinated.

(C) The owner or operator shall list in the RMP other federal or state emergency plan requirements to which the stationary source is subject.

Effective: 01/08/2010

R.C. 119.032 review dates: 10/22/2009 and 10/23/2014

CERTIFIED ELECTRONICALLY
Certification

12/29/2009
Date

Promulgated Under: 119.03
Statutory Authority: 3753.02
Rule Amplifies: 3753
Prior Effective Dates: 8/13/99

3745-104-48 **Risk management plan: certification.**

(A) For program one processes, the owner or operator shall submit in the RMP the certification statement provided in paragraph (B)(4) of rule 3745-104-06 of the Administrative Code.

(B) For all other covered processes, the owner or operator shall submit in the RMP a single certification that, to the best of the signer's knowledge, information, and belief formed after reasonable inquiry, the information submitted is true, accurate, and complete.

R.C. 119.032 review dates: 10/23/2009 and 10/23/2014

CERTIFIED ELECTRONICALLY
Certification

10/23/2009
Date

Promulgated Under: 119.03
Statutory Authority: 3753.02
Rule Amplifies: 3753
Prior Effective Dates: 8/13/99

3745-104-49 **Risk management plan: updates and required corrections.**

[Comment: For dates of non-regulatory government publications, publications of recognized organizations and associations, federal rules, and federal statutory provisions referenced in this rule, see paragraph (C) of rule 3745-104-01 of the Administrative Code titled "Referenced materials."]

(A) The owner or operator shall review and update the RMP as specified in paragraph (B) of this rule and submit it in a method and format to a central point specified by USEPA as of the date of submission.

(B) The owner or operator shall revise and update the RMP submitted under rule 3745-104-38 of the Administrative Code as follows:

(1) Within five consecutive years of its initial submission or each most recent update required by paragraphs (B)(2) to (B)(7) of this rule, whichever is later, and every five consecutive years thereafter. For purposes of determining the date of initial submissions, RMPs submitted before June 21, 1999 are considered to have been submitted on that date;

(2) No later than three years after a newly regulated substance is first listed in 40 CFR Part 68 by USEPA;

(3) No later than the date on which a new regulated substance is first present in an already covered process above a threshold quantity;

(4) No later than the date on which a regulated substance is first present above a threshold quantity in a new process;

(5) Within six months of a change that requires a revised PHA or hazard review;

(6) Within six months of a change that requires a revised offsite consequence analysis as provided in rule 3745-104-14 of the Administrative Code; and

(7) Within six months of a change that changes the applicability level of the process as defined in rule 3745-104-05 of the Administrative Code.

(C) Within six months of the date a stationary source is no longer subject to this rule, the owner or operator shall submit a de-registration to USEPA indicating that the stationary source is no longer covered.

(D) The owner or operator shall correct the RMP as follows:

(1) New accident history information. For any accidental release meeting the five-year accident history reporting criteria of rule 3745-104-16 of the

Administrative Code and occurring after April 9, 2004, the owner or operator shall submit the data required under rule 3745-104-44, paragraph (A)(9) of rule 3745-104-45 and paragraph (A)(11) of rule 3745-104-46 of the Administrative Code with respect to that accident within six months of the release or by the time the RMP is updated under paragraph (B) of this rule.

(2) Emergency contact information. Beginning June 21, 2004, within one month of any change in the emergency contact information required under paragraph (B)(6) of rule 3745-104-42, the owner or operator shall submit a correction of that information.

Effective: 01/08/2010

R.C. 119.032 review dates: 10/22/2009 and 10/23/2014

CERTIFIED ELECTRONICALLY
Certification

12/29/2009
Date

Promulgated Under: 119.03
Statutory Authority: 3753.02
Rule Amplifies: 3753
Prior Effective Dates: 8/13/99, 7/01/05

3745-104-50 **Recordkeeping.**

The owner or operator shall maintain records supporting the implementation of this chapter for five years from the date the record was generated unless otherwise provided in rules 3745-104-24 to 3745-104-35 of the Administrative Code.

R.C. 119.032 review dates: 10/23/2009 and 10/23/2014

CERTIFIED ELECTRONICALLY
Certification

10/23/2009
Date

Promulgated Under: 119.03
Statutory Authority: 3753.02
Rule Amplifies: 3753
Prior Effective Dates: 8/13/99

3745-104-51 **Availability of information to the public.**

The RMP required in rules 3745-104-38 to 3745-104-49 of the Administrative Code shall be available to the public under section 149.43 of the Revised Code.

R.C. 119.032 review dates: 10/23/2009 and 10/23/2014

CERTIFIED ELECTRONICALLY
Certification

10/23/2009
Date

Promulgated Under: 119.03
Statutory Authority: 3753.02
Rule Amplifies: 3753
Prior Effective Dates: 8/13/99

3745-104-52 **Permit content and air permitting authority or designated agency requirements.**

[Comment: For dates of non-regulatory government publications, publications of recognized organizations and associations, federal rules, and federal statutory provisions referenced in this rule, see paragraph (C) of rule 3745-104-01 of the Administrative Code titled "Referenced materials."]

(A) These requirements apply to any stationary source subject to this chapter and Chapter 3745-77 of the Administrative Code or 40 CFR Part 71. The Title V or 40 CFR Part 71 permit for the stationary source shall contain:

(1) A statement listing this chapter as an applicable requirement;

(2) Conditions that require the source owner or operator to submit:

(a) A compliance schedule for meeting the requirements of this part by the date provided in rule 3745-104-05 of the Administrative Code or;

(b) As part of the compliance certification submitted under paragraph (C)(10)(e) of rule 3745-77-03 of the Administrative Code, a certification statement that the source is in compliance with all requirements of this chapter, including the registration and submission of the RMP.

(B) The owner or operator shall submit any additional relevant information requested by Ohio EPA.

(C) For Title V or 40 CFR Part 71 permits that are issued prior to the deadline for registering and submitting the RMP and that do not contain permit conditions described in paragraph (A) of this rule, the owner or operator or the director shall initiate permit revision or reopening according to the procedures of rule 3745-77-08 of the Administrative Code or 40 CFR 71.7 to incorporate the terms and conditions consistent with paragraph (A) of this rule.

Effective: 01/08/2010

R.C. 119.032 review dates: 10/22/2009 and 10/23/2014

CERTIFIED ELECTRONICALLY
Certification

12/29/2009
Date

Promulgated Under: 119.03
Statutory Authority: 3753.02
Rule Amplifies: 3753
Prior Effective Dates: 8/13/99, 7/01/05

3745-104-53 **Fees.**

[Comment: For dates of non-regulatory government publications, publications of recognized organizations and associations, federal rules, and federal statutory provisions referenced in this rule, see paragraph (C) of rule 3745-104-01 of the Administrative Code titled "Referenced materials."]

(A) Except as provided in paragraph (D) of this rule, an owner or operator who is required to submit a risk management plan under this chapter shall pay annually to Ohio EPA a fee of fifty dollars together with any of the following applicable fees:

(1) A fee of sixty-five dollars if a covered process in the stationary source includes propane and propane is the only regulated substance at the stationary source over the threshold quantity;

(2) A fee of sixty-five dollars if a covered process in the stationary source includes anhydrous ammonia that is sold for use as an agricultural nutrient and is on-site over the threshold quantity;

(3) A fee of two hundred dollars for each regulated substance over the threshold quantity in a covered process. Propane shall be considered a regulated substance subject to the fee levied under this paragraph if it is not the only regulated substance over the threshold quantity. Anhydrous ammonia shall be considered a regulated substance subject to the fee levied under this paragraph if it is not sold for use as an agricultural nutrient.

(B) The fees assessed under this rule for the year 1999 shall be collected no later than January 3, 2000. Each year thereafter, the fees shall be collected no later than September first of each subsequent year. The fees assessed for a stationary source shall be based upon the regulated substances present over the threshold quantity identified in the risk management plan on file as of June twenty-first for calendar year 1999 and for each subsequent calendar year as of September first.

(C) An owner or operator who is required to submit a risk management plan under this chapter and who fails to submit such a plan within thirty days after the applicable filing date prescribed in paragraph (B) of this rule shall submit with the risk management plan a late filing fee of three per cent of the total fees due under paragraph (A) of this rule.

(D) This rule does not apply to the owner or operator of a business that employs one hundred or fewer individuals and is a small business concern as defined in the "Small Business Act," 15 USC 632.

Effective: 01/08/2010

R.C. 119.032 review dates: 10/22/2009 and 10/23/2014

CERTIFIED ELECTRONICALLY
Certification

12/29/2009
Date

Promulgated Under: 119.03
Statutory Authority: 3753.02
Rule Amplifies: 3753
Prior Effective Dates: 8/13/99, 3/09/01, 7/01/05

Chapter 3745-105: Pathological Waste Incinerators

Contact: Dana Thompson 614-644-3701
Dana.Thompson@epa.ohio.gov

3745-105-01 **Applicability, definitions, and reference to materials.**

[Comment: For dates of non-regulatory government publications, publications of recognized organizations and associations, federal rules, and federal statutory provisions referenced in this rule, see the last paragraph of this rule titled "Reference to materials."]

(A) Except as otherwise provided in paragraph (B) of this rule, the definitions in rule 3745-15-01 of the Administrative Code shall apply to this chapter.

(B) For the purpose of Chapter 3745-105 of the Administrative Code:

(1) "Batch incinerator" means an incinerator which is loaded and undergoes a cycle of combustion, ash burndown, cooling-off, and ash removal, prior to being loaded again.

(2) "Continuous duty incinerator" means an incinerator of either a multiple chamber or controlled-air design into which waste can be charged at periodic intervals and from which ash can be removed at periodic intervals, without an ash burndown and cooling-off cycle.

(3) "Continuous temperature recorder" means a device, which uses a temperature sensor such as a thermocouple, that is part of an instrument which continuously monitors and records the temperature at a specific location in an air pollution source.

(4) "Infectious agent" means a type of microorganism, helminth or virus that causes, or significantly contributes to the cause of, increased morbidity or mortality of human beings.

(5) "Intermittent feed incinerator" means an incinerator of either a multiple chamber or controlled-air design into which waste can be charged at periodic intervals and from which ash is removed after a burndown and cooling-off cycle.

(6) "Off-site facility" means a pathological waste incinerator that burns any pathological waste from a generator that is located off-site from the location of the pathological waste incinerator.

(7) "Pathological waste" means waste material consisting of only human or animal remains, anatomical parts, and/or tissue, the bags/containers used to collect and transport the waste material, and animal bedding if applicable.

(8) "Pathological waste incinerator" means any device used to provide the combustion of pathological waste.

(9) "Retention time" means the average time for gases to pass through a chamber. The retention time of the secondary chamber of an incinerator shall be calculated using the volume of the secondary chamber divided by the actual

volumetric flow rate emitted from the secondary chamber at maximum operating temperature and burning rate.

(10) "USEPA" means United States environmental protection agency.

(C) This chapter applies to the owner or operator of any pathological waste incinerator except the following:

(1) Crematories that only combust human remains and coffins.

(2) Veterinary clinics and animal shelters that only burn carcasses and bedding of animals not intentionally exposed to infectious agents during research, production of biological material, or testing of pharmaceutical products, unless the improper disposal of those materials would present a substantial threat to public health.

(3) Licensed solid waste disposal facilities and municipal solid waste disposal facilities that burn pathological wastes that have been rendered non-infectious in accordance with rule 3745-27-32 of the Administrative Code.

(4) Any incinerator which meets the applicability requirements under 40 CFR 60.32e or 40 CFR 60.50c, guidelines or standards for hospital/medical/infectious incinerators, and is not operating under an exemption from those requirements granted under 40 CFR, 60.32e(b) through (h) or 40 CFR, 60.50c(b) through (h).

(D) Reference to materials. This chapter includes references to certain matter or materials. The text of the referenced material is not included in the rules contained in this chapter. Information on the availability of the referenced materials as well as the date of, and/or the particular edition or version of the material is included in this rule. For materials subject to change, only the specific versions specified in this rule are referenced. Material is referenced as it exists on the effective date of this rule. Except for subsequent annual publication of existing (unmodified) Code of Federal Regulation compilations, any amendment or revision to a referenced document is not applicable unless and until this rule has been amended to specify the new dates.

(1) Availability. The referenced materials are available as follows:

(a) Code of Federal Regulations (CFR). Information and copies may be obtained by writing to: "Superintendent of Documents, Attn: New Orders, PO Box 371954, Pittsburgh, PA 15250-7954." The full text of the CFR is also available in electronic format at www.access.gpo.gov/nara/cfr. The CFR compilations are also available for inspection and copying at most public libraries and "The State Library of Ohio."

(2) Referenced materials.

(a) 40 CFR, Part 60; "Standards of Performance for New Stationary Sources;" as published in the July 1, 2008 Code of Federal Regulations.

(b) 40 CFR Part 60, Appendix B; "Performance specifications;" as published in the July 1, 2008 Code of Federal Regulations.

(c) 40 CFR 60.7; "Notification and record keeping;" as published in the July 1, 2008 Code of Federal Regulations.

(d) 40 CFR 60.13; "Monitoring requirements;" as published in the July 1, 2008 Code of Federal Regulations.

(e) 40 CFR 60.32e; "Designated facilities;" as published in the July 1, 2008 Code of Federal regulations.

(f) 40 CFR 60.50c; "Applicability and delegation of authority;" as published in the July 1, 2008 Code of Federal Regulations..

(g) USEPA method 9; "Visual Determination of the Opacity of Emissions from Stationary Sources;" as contained in 40 CFR Part 60, Appendix A; as published in the July 1, 2008 Code of Federal Regulations.

Effective: 08/24/2009

R.C. 119.032 review dates: 05/22/2009 and 08/24/2014

CERTIFIED ELECTRONICALLY
Certification

08/14/2009
Date

Promulgated Under: 119.03
Statutory Authority: 3704.03(E)
Rule Amplifies: 3704.03(A), 3704.03(E)
Prior Effective Dates: 3/23/04

3745-105-02 **Emission limits.**

[Comment: For dates of non-regulatory government publications, publications of recognized organizations and associations, federal rules, and federal statutory provisions referenced in this rule, see the last paragraph of rule 3745-105-01 of the Administrative Code titled "Reference to materials."]

(A) Particulate emissions shall not exceed 0.20 pound of particulates per one hundred pounds of waste charged for any pathological waste incinerator with a capacity less than one hundred pounds of waste per hour.

(B) Particulate emissions shall not exceed 0.10 pound of particulates per one hundred pounds of waste charged for any pathological waste incinerator with a capacity equal to or greater than one hundred pounds of waste per hour but less than one thousand eight hundred pounds of waste per hour.

(C) Particulate emissions shall not exceed 0.06 pounds of particulate per one hundred pounds of waste charged for any pathological waste incinerator with a capacity equal to or greater than one thousand eight hundred pounds of waste per hour.

(D) Carbon monoxide emissions from any pathological waste incinerator shall not exceed one hundred parts per million, by volume, on a dry basis, adjusted to seven per cent oxygen in the exhaust stream as an hourly average.

(E) Visible particulate emissions from any pathological waste incinerator shall not exceed five per cent opacity except for six minutes in any continuous sixty minute period during which opacity shall not exceed ten per cent. Opacity shall be determined by USEPA method 9.

Effective: 08/24/2009

R.C. 119.032 review dates: 05/22/2009 and 08/24/2014

CERTIFIED ELECTRONICALLY
Certification

08/14/2009
Date

Promulgated Under: 119.03
Statutory Authority: 3704.03(E)
Rule Amplifies: 3704.03(A), 3704.03(E)
Prior Effective Dates: 3/23/04

3745-105-03 **Design parameters and operating restrictions.**

(A) All incineration of pathological waste shall occur in a controlled air multi-chamber incinerator, or equivalent technology as approved by the director, which provides complete combustion of waste, excluding metallic items, to carbonized or mineralized ash. Any ash that does not meet the criteria shall be reincinerated.

(B) The primary combustion chamber for batch units and intermittent feed units shall be maintained so that the exit gas temperature is a minimum of one thousand two hundred degrees Fahrenheit. The secondary combustion chamber of any unit shall operate so that the temperature of the gas exiting the secondary combustion chamber is a minimum of one thousand six hundred degrees Fahrenheit.

(C) The primary combustion chamber for continuous-duty units shall be maintained so that the exit gas temperature is a minimum of one thousand four hundred degrees Fahrenheit.

(D) The secondary combustion chamber of any pathological waste incinerator constructed on or before January 1, 1991 shall provide a minimum one-second retention time at one thousand six hundred degrees Fahrenheit except for any unit that has a longer retention time specified in an Ohio EPA permit-to-install or permit-to-install and operate. The secondary combustion chamber of any pathological waste incinerator constructed after January 1, 1991 shall provide a minimum two-second retention time at one thousand six hundred degrees Fahrenheit.

(E) All pathological waste incinerators with a capacity greater than four hundred pounds per hour shall be equipped with an automatic feeder which is designed and operated so that wastes cannot be charged if the exit gas temperature of the gas exiting the secondary combustion chamber is less than the minimum temperature specified in paragraph (B) of this rule.

(F) Batch pathological waste incinerators shall incorporate a lockout system which will prevent the ignition of waste until the exit gas temperature of the secondary chamber reaches one thousand six hundred degrees Fahrenheit and which will prevent recharging until the combustion and burn-down cycles are complete.

(G) Pathological waste shall not be loaded into the primary combustion chamber of a continuous feed pathological waste incinerator until the exit gas temperature has reached the minimum temperature specified in paragraph (B) of this rule.

(H) The stack or stacks from any pathological waste incinerator shall be designed to minimize the impact of the emissions on employees, residents, patients, visitors, or nearby residences. The design of any unit shall meet good engineering practices so as not to cause excessive concentrations of any air contaminant at any air intake for heating and cooling of any building, or at operable windows, or doors.

(I) Any mechanically-fed pathological waste incinerator must be equipped with an air lock system to prevent opening the incinerator to the room environment. The volume of the loading systems shall be designed so as to prevent overcharging of the unit to assure complete combustion of waste.

(J) All pathological waste incinerators, including all associated equipment and grounds, shall be designed, operated and maintained to prevent the emission of objectionable odors.

(K) Pathological waste that is also radioactive shall be managed in accordance with the applicable rules of the Ohio department of health and regulations of the United States nuclear regulatory commission.

[Note: section 3734.027 of the Revised Code prohibits the disposal of low level radioactive waste in an "infectious waste treatment facility" as that term is defined in the Revised Code.]

(L) The owner or operator of any pathological waste incinerator shall not intentionally dispose of the following items by burning in the incinerator:

(1) Visible globules of mercury;

(2) Nickel-cadmium batteries;

(3) Switches, thermometers, batteries, and other devices containing mercury; and

(4) Bags or other containers for infectious waste handling which contain cadmium, chromium or lead as a pigmenting agent.

Effective: 08/24/2009

R.C. 119.032 review dates: 05/22/2009 and 08/24/2014

CERTIFIED ELECTRONICALLY
Certification

08/14/2009
Date

Promulgated Under: 119.03
Statutory Authority: 3704.03(E)
Rule Amplifies: 3704.03(A), 3704.03(E)
Prior Effective Dates: 3/23/04

3745-105-04 **Monitoring requirements.**

[Comment: For dates of non-regulatory government publications, publications of recognized organizations and associations, federal rules, and federal statutory provisions referenced in this rule, see the last paragraph of rule 3745-105-01 of the Administrative Code titled "Reference to materials."]

(A) Each incinerator unit burning pathological waste shall be equipped with a continuous temperature recorder for the primary and secondary combustion chambers.

(B) Each pathological waste incinerator with a capacity greater than one thousand pounds per hour shall be equipped with a continuous carbon monoxide monitor and alarm. The alarm shall indicate whenever concentrations exceed one hundred fifty parts per million.

(C) All facilities that operate a pathological waste incinerator shall install, maintain and operate a radioactivity monitor and alarm. The radioactivity monitor shall be installed to monitor all pathological waste prior to combustion.

(D) Any pathological waste incinerator that is equipped with a bypass stack shall be equipped with a device to continuously monitor and record the temperature in the bypass stack.

(E) The owner or operator of a pathological waste incinerator shall install a scale, accurate to within one pound, near any pathological waste incinerator to weigh all of the material charged to the unit. The owner or operator of a pathological waste incinerator shall maintain a written log to record the amount of material charged to any unit on a pounds per hour or a pounds per batch basis. Alternative arrangements may be approved by the director provided they can be shown to be of equivalent effectiveness as a method of regulating flow into the incinerator and generating a permanent record of charging rates.

(F) Each incinerator with a capacity greater than one thousand pounds per hour shall be equipped with a continuous opacity monitor unless otherwise exempted by the director because of the influence of condensed water vapor in the stack exit gas.

(G) Any continuous opacity or carbon monoxide monitor required under this rule shall be installed and maintained in accordance with 40 CFR Part 60.

Effective: 08/24/2009

R.C. 119.032 review dates: 05/22/2009 and 08/24/2014

CERTIFIED ELECTRONICALLY
Certification

08/14/2009
Date

Promulgated Under: 119.03
Statutory Authority: 3704.03(E)
Rule Amplifies: 3704.03(A), 3704.03(E)
Prior Effective Dates: 3/23/04

3745-105-05 **Recordkeeping.**

[Comment: For dates of non-regulatory government publications, publications of recognized organizations and associations, federal rules, and federal statutory provisions referenced in this rule, see the last paragraph of rule 3745-105-01 of the Administrative Code titled "Reference to materials."]

(A) Pursuant to 40 CFR Parts 60.7 and 60.13(h), the owner or operator of each incinerator with a capacity greater than one thousand pounds per hour with continuous emission monitors shall submit reports on a quarterly basis to the appropriate Ohio EPA district office or local air agency documenting all instances of values in excess of the limitations specified in rule 3745-105-02 of the Administrative Code. These quarterly excess emission reports shall be submitted by February first, May first, August first, and November first of each year and shall cover the data obtained during the previous calendar quarters.

(B) The owner or operator of each incinerator with a capacity less than or equal to one thousand pounds per hour shall submit reports on a quarterly basis to the appropriate Ohio EPA district office or local air agency documenting all instances of values in excess of the limitations specified in rule 3745-105-02 of the Administrative Code. These quarterly reports shall be submitted by February first, May first, August first, and November first of each year and shall cover the data obtained during the previous calendar quarters.

(C) The reports required under paragraph (A) or (B) of this rule shall include every instance of activation of the radioactivity alarm; the reason for the alarm, and corrective action taken.

(D) All recording charts and charging records shall be maintained for a period of five years and be available for inspection by the Ohio EPA or its authorized representatives at any reasonable time.

(E) In addition to the requirements of paragraph (C) of this rule, the owner or operator shall immediately report any instance of radioactivity alarm activation to the environmental radiation safety section of the bureau of radiation protection of the Ohio department of health.

Effective: 08/24/2009

R.C. 119.032 review dates: 05/22/2009 and 08/24/2014

CERTIFIED ELECTRONICALLY
Certification

08/14/2009
Date

Promulgated Under: 119.03
Statutory Authority: 3704.03(E)
Rule Amplifies: 3704.03(A), 3704.03(E)
Prior Effective Dates: 3/23/04

3745-105-06 **Compliance and performance testing requirements.**

[Comment: For dates of non-regulatory government publications, publications of recognized organizations and associations, federal rules, and federal statutory provisions referenced in this rule, see the last paragraph of rule 3745-105-01 of the Administrative Code titled "Reference to materials."]

(A) Within thirty days after the installation of the continuous monitoring and recording equipment, the owner or operator of a pathological waste incinerator shall conduct a performance specification test of such equipment pursuant to division (I) of section 3704.03 of the Revised Code and 40 CFR Part 60, appendix B, performance specification test one. Personnel from the appropriate Ohio EPA district office or local air agency shall be permitted to witness the performance specification test, and two copies of the test results shall be submitted to the Ohio EPA field office within forty-five days after the test is completed.

(B) All owners or operators of pathological waste incinerators with a capacity greater than four hundred pounds per hour shall conduct annual performance tests to demonstrate compliance with the requirements in paragraphs (A) to (D) of rule 3745-105-02 of the Administrative Code.

(C) All owners or operators of pathological waste incinerators with a capacity less than or equal to four hundred pounds per hour shall conduct a stack test once every three years to demonstrate compliance with the requirements in paragraphs (A) to (D) of rule 3745-105-02 of the Administrative Code.

(D) The director may require more frequent tests if, in the director's judgment, there may be a violation of any applicable emission standards or there has been a change in the operation that may cause an increase in emissions due to a change in waste streams, pathological waste generators, or other operating conditions.

(E) The director or his/her representative shall be allowed to witness the tests, examine testing equipment, and require the acquisition or submission of data and information necessary to assure that the source operation and testing procedures provide a valid characterization of the emissions from the source and/or performance of the control equipment. The appropriate Ohio EPA district office or local air agency shall be notified at least thirty days in advance of any performance test by the owner or operator. The notice shall specify the date, time, place, source operating parameters, proposed test procedures, and persons conducting the test. Test results shall be submitted to the appropriate Ohio EPA district office or local air agency no later than thirty days after the completion of the test.

(F) Any owner or operator required to install and operate a radioactivity monitor and alarm due to the provisions of paragraph (C) of rule 3745-105-04 of the Administrative Code shall achieve compliance with paragraph (C) of rule 3745-105-04 of the Administrative Code as expeditiously as practicable, but not later than August 31, 2003.

[Note: an earlier compliance date for the radioactivity monitor and alarm may pertain under rule 3745-75-06 of the Administrative Code for pathological waste incinerators located offsite, or at facilities where radioactive materials are used or are licensed for use by the United States nuclear regulatory commission.]

Effective: 08/24/2009

R.C. 119.032 review dates: 05/22/2009 and 08/24/2014

CERTIFIED ELECTRONICALLY
Certification

08/14/2009
Date

Promulgated Under: 119.03
Statutory Authority: 3704.03(E)
Rule Amplifies: 3704.03(A), 3704.03(E)
Prior Effective Dates: 3/23/04

Chapter 3745-108: Clean Air Mercury Rules

Contact: Alan Harness 614-644-4838
Alan.Harness@epa.ohio.gov

Rules in Chapter 3745-108 have been repealed as of 4/19/10

Chapter 3745-109: Clean Air Interstate Rules (CAIR)

Contact: Chris Beekman 614-644-3597
Chris.beekman@epa.ohio.gov

3745-109-01 **CAIR NOx annual, CAIR SO2 and CAIR NOx ozone season trading programs definitions and general provisions.**

[Comment: For dates of non-regulatory government publications, publications of recognized organizations and associations, federal rules, and federal statutory provisions referenced in this rule, see paragraph (H) of this rule titled "Referenced materials."]

(A) Purpose.

Rules 3745-109-01 to 3745-109-08 of the Administrative Code establish the CAIR NOx annual trading program in Ohio as a means of reducing NOx emissions in the state. The director authorizes the administrator to assist the director in implementing the state CAIR NOx annual trading program by carrying out the functions set forth for the administrator in rules 3745-109-01 to 3745-109-08 of the Administrative Code.

Rules 3745-109-01 and 3745-109-09 to 3745-109-14 of the Administrative Code establish the CAIR SO2 budget trading program in Ohio as a means to control fine particulate and sulfur dioxide emissions from CAIR units in the state. The director authorizes the administrator to assist the director in implementing the state CAIR SO2 budget trading program as a participant in the federal CAIR SO2 budget trading program by carrying out the functions set forth for the administrator in these rules.

Rules 3745-109-01 and 3745-109-15 to 3745-109-21 of the Administrative Code establish the provisions and requirements to implement a CAIR NOx ozone season trading program in Ohio as a means of control and reductions of NOx emissions. The director authorizes the administrator to assist the director in implementing the state CAIR NOx ozone season trading program as a participant in the federal CAIR NOx ozone season trading program by carrying out the functions set forth for the administrator in this chapter.

(B) Definitions.

The terms used in this rule and rules 3745-109-02 to 3745-109-21 of the Administrative Code shall have the meanings set forth in this paragraph as follows:

(1) "Account number" means the identification number given by the administrator to each CAIR NOx, SO2, or NOx ozone season allowance tracking system account.

(2) "Acid rain emissions limitation" means a limitation on emissions of sulfur dioxide or nitrogen oxides under the acid rain program.

(3) "Acid rain program" means a multi-state sulfur dioxide and nitrogen oxides air pollution control and emission reduction program established by the administrator under Title IV of the CAA and 40 CFR Parts 72 to 78.

(4) "Administrator" means the administrator of the United States environmental protection agency or the administrator's duly authorized representative.

(5) "Allocate" or "allocation" means the following:

(a) With regard to CAIR NOx allowances, the determination by a permitting authority or the administrator of the amount of such CAIR NOx allowances to be initially credited to a CAIR NOx unit, a new unit set-aside, or other entity.

(b) With regard to CAIR SO2 allowances issued under the acid rain program, the determination by the administrator of the amount of such CAIR SO2 allowances to be initially credited to a CAIR SO2 unit or other entity and, with regard to CAIR SO2 allowances issued under provisions of a state implementation plan that are approved under 40 CFR 51.124(o)(1) or 40 CFR 51.124(o)(2) or 40 CFR 51.124(r) or 40 CFR 97.288, the determination by a permitting authority of the amount of such CAIR SO2 allowances to be initially credited to a CAIR SO2 unit or other entity.

(c) With regard to CAIR NOx ozone season allowances, the determination by a permitting authority or the administrator of the amount of such CAIR NOx ozone season allowances to be initially credited to a CAIR NOx ozone season unit, a new unit set-aside, or other entity.

(6) "Allowance transfer deadline" means the following:

(a) For a control period, midnight of March first (if it is a business day), or midnight of the first business day thereafter (if March first is not a business day), immediately following the control period and is the deadline by which a CAIR NOx or SO2 allowance transfer must be submitted for recordation in a CAIR NOx or SO2 source's compliance account in order to be used to meet the source's CAIR NOx or SO2 emissions limitation for such control period in accordance with paragraph (D) of rule 3745-109-05 or paragraph (D) of rule 3745-109-11 of the Administrative Code.

(b) For a control period, midnight of November thirtieth (if it is a business day), or midnight of the first business day thereafter (if November thirtieth is not a business day), immediately following the control period and is the deadline by which a CAIR NOx ozone season allowance transfer must be submitted for recordation in a CAIR NOx ozone season source's compliance account in order to be used to meet the source's CAIR NOx ozone season emissions limitation for such control period in accordance with paragraph (D) of rule 3745-109-18 of the Administrative Code.

(7) "Alternate CAIR designated representative" means the following:

(a) For a CAIR NOx source and each CAIR NOx unit at the source, the natural person who is authorized by the owners and operators of the source and all

such units at the source, in accordance with rules 3745-109-02 and 3745-109-08 of the Administrative Code, to act on behalf of the CAIR designated representative in matters pertaining to the CAIR NOx annual trading program. If the CAIR NOx source is also a CAIR SO2 source, then this natural person shall be the same person as the alternate CAIR designated representative under the CAIR SO2 trading program. If the CAIR NOx source is also a CAIR NOx ozone season source, then this natural person shall be the same person as the alternate CAIR designated representative under the CAIR NOx ozone season trading program. If the CAIR NOx source is also subject to the acid rain program, then this natural person shall be the same person as the alternate designated representative under the acid rain program. If the CAIR NOx source is also subject to the Hg budget trading program, then this natural person shall be the same person as the alternate Hg designated representative under the Hg budget trading program.

(b) For a CAIR SO2 source and each CAIR SO2 unit at the source, the natural person who is authorized by the owners and operators of the source and all such units at the source, in accordance with rules 3745-109-09 and 3745-109-14 of the Administrative Code, to act on behalf of the CAIR designated representative in matters pertaining to the CAIR SO2 trading program. If the CAIR SO2 source is also a CAIR NOx source, then this natural person shall be the same person as the alternate CAIR designated representative under the CAIR NOx annual trading program. If the CAIR SO2 source is also a CAIR NOx ozone season source, then this natural person shall be the same person as the alternate CAIR designated representative under the CAIR NOx ozone season trading program. If the CAIR SO2 source is also subject to the acid rain program, then this natural person shall be the same person as the alternate designated representative under the acid rain program. If the CAIR SO2 source is also subject to the Hg budget trading program, then this natural person shall be the same person as the alternate Hg designated representative under the Hg budget trading program.

(c) For a CAIR NOx ozone season source and each CAIR NOx ozone season unit at the source, the natural person who is authorized by the owners and operators of the source and all such units at the source, in accordance with rules 3745-109-15 and 3745-109-21 of the Administrative Code, to act on behalf of the CAIR designated representative in matters pertaining to the CAIR NOx ozone season trading program. If the CAIR NOx ozone season source is also a CAIR NOx source, then this natural person shall be the same person as the alternate CAIR designated representative under the CAIR NOx annual trading program. If the CAIR NOx ozone season source is also a CAIR SO2 source, then this natural person shall be the same person as the alternate CAIR designated representative under the CAIR SO2 trading program. If the CAIR NOx ozone season source is also subject to the acid rain program, then this natural person shall be the same person as the alternate designated representative under the acid rain program. If the CAIR NOx ozone season source is also subject to the Hg budget trading

program, then this natural person shall be the same person as the alternate Hg designated representative under the Hg budget trading program.

(8) "Automated data acquisition and handling system" or "DAHS" means that component of the continuous emission monitoring system, or other emissions monitoring system approved for use under rules 3745-109-07, 3745-109-13 and 3745-109-20 of the Administrative Code, designed to interpret and convert individual output signals from pollutant concentration monitors, flow monitors, diluent gas monitors, and other component parts of the monitoring system to produce a continuous record of the measured parameters in the measurement units required by rules 3745-109-07, 3745-109-13 and 3745-109-20 of the Administrative Code.

(9) "Biomass" means any of the following:

(a) Any organic material grown for the purpose of being converted to energy.

(b) Any organic byproduct of agriculture that can be converted into energy.

(c) Any material that can be converted into energy and is nonmerchantable for other purposes, that is segregated from other nonmerchantable material, and that is either of the following:

(i) A forest-related organic resource, including mill residues, precommercial thinnings, slash, brush, or by product from conversion of trees to merchantable material.

(ii) A wood material, including pallets, crates, dunnage, manufacturing and construction materials (other than pressure-treated, chemically-treated, or painted wood products), and landscape or right-of-way tree trimmings.

(10) "Boiler" means an enclosed fossil-fuel-fired or other-fuel-fired combustion device used to produce heat and to transfer heat to recirculating water, steam, or other medium, excluding CO boilers associated with the combusting CO from fluidized catalytic crackers at petroleum refineries. The exclusion of CO boilers applies only to those units applicable to the CAIR NOx ozone season trading program under paragraph (C)(4) of this rule (non-EGUs).

(11) "Bottoming-cycle cogeneration unit" means a cogeneration unit in which the energy input to the unit is first used to produce useful thermal energy and at least some of the reject heat from the useful thermal energy application or process is then used for electricity production.

(12) "Btu" means British thermal unit.

(13) "CAIR" means the clean air interstate rule.

(14) "CAIR authorized account representative" means, with regard to a general account, a responsible natural person who is authorized, in accordance with rules 3745-109-02, 3745-109-05, 3745-109-08, 3745-109-09, 3745-109-11, 3745-109-14, 3745-109-15, 3745-109-18 and 3745-109-21 of the Administrative Code, to transfer and otherwise dispose of CAIR NOx, SO2, or NOx ozone season allowances held in the general account and, with regard to a compliance account, the CAIR designated representative of the source.

(15) "CAIR designated representative" means the following:

(a) For a CAIR NOx source and each CAIR NOx unit at the source, the natural person who is authorized by the owners and operators of the source and all such units at the source, in accordance with rules 3745-109-02 and 3745-109-08 of the Administrative Code, to represent and legally bind each owner and operator in matters pertaining to the CAIR NOx annual trading program. If the CAIR NOx source is also a CAIR SO2 source, then this natural person shall be the same person as the CAIR designated representative under the CAIR SO2 trading program. If the CAIR NOx source is also a CAIR NOx ozone season source, then this natural person shall be the same person as the CAIR designated representative under the CAIR NOx ozone season trading program. If the CAIR NOx source is also subject to the acid rain program, then this natural person shall be the same person as the designated representative under the acid rain program. If the CAIR NOx source is also subject to the Hg budget trading program, then this natural person shall be the same person as the Hg designated representative under the Hg budget trading program.

(b) For a CAIR SO2 source and each CAIR SO2 unit at the source, the natural person who is authorized by the owners and operators of the source and all such units at the source, in accordance with rules 3745-109-09 and 3745-109-14 of the Administrative Code, to represent and legally bind each owner and operator in matters pertaining to the CAIR SO2 trading program. If the CAIR SO2 source is also a CAIR NOx source, then this natural person shall be the same person as the CAIR designated representative under the CAIR NOx annual trading program. If the CAIR SO2 source is also a CAIR NOx ozone season source, then this natural person shall be the same person as the CAIR designated representative under the CAIR NOx ozone season trading program. If the CAIR SO2 source is also subject to the acid rain program, then this natural person shall be the same person as the designated representative under the acid rain program. If the CAIR SO2 source is also subject to the Hg budget trading program, then this natural person shall be the same person as the Hg designated representative under the Hg budget trading program.

(c) For a CAIR NOx ozone season source and each CAIR NOx ozone season unit at the source, the natural person who is authorized by the owners and operators of the source and all such units at the source, in accordance with rules 3745-109-15 to 3745-109-21 of the Administrative Code, to represent

and legally bind each owner and operator in matters pertaining to the CAIR NOx ozone season trading program. If the CAIR NOx ozone season source is also a CAIR NOx source, then this natural person shall be the same person as the CAIR designated representative under the CAIR NOx annual trading program. If the CAIR NOx ozone season source is also a CAIR SO2 source, then this natural person shall be the same person as the CAIR designated representative under the CAIR SO2 trading program. If the CAIR NOx ozone season source is also subject to the acid rain program, then this natural person shall be the same person as the designated representative under the acid rain program. If the CAIR NOx ozone season source is also subject to the Hg budget trading program, then this natural person shall be the same person as the Hg designated representative under the Hg budget trading program.

(16) "CAIR NOx allowance" means a limited authorization issued by a permitting authority or the administrator under provisions of a state implementation plan that are approved under 40 CFR 51.123 (o)(1) or 40 CFR 51.123(o)(2) or 40 CFR 51.123(p) or 40 CFR Part 97 Subpart EE or 40 CFR 97.188, to emit one ton of NOx during a control period of the specified calendar year for which the authorization is allocated or of any calendar year thereafter under the CAIR NOx annual trading program. An authorization to emit NOx that is not issued under provisions of a state implementation plan that are approved under 40 CFR 51.123(o)(1) or 40 CFR 51.123(o)(2) or 40 CFR 51.123(p) or 40 CFR Part 97 Subpart EE or 40 CFR 97.188 shall not be a CAIR NOx allowance.

(17) "CAIR NOx allowance deduction" or "deduct CAIR NOx allowances" means the permanent withdrawal of CAIR NOx allowances by the administrator from a compliance account, e.g., in order to account for a specified number of tons of total NOx emissions from all CAIR NOx units at a CAIR NOx source for a control period, determined in accordance with rule 3745-109-07 of the Administrative Code, or to account for excess emissions.

(18) "CAIR NOx allowance tracking system" means the system by which the administrator records allocations, deductions, and transfers of CAIR NOx allowances under the CAIR NOx annual trading program. Such allowances shall be allocated, held, deducted, or transferred only as whole allowances.

(19) "CAIR NOx allowance tracking system account" means an account in the CAIR NOx allowance tracking system established by the administrator for purposes of recording the allocation, holding, transferring, or deducting of CAIR NOx allowances.

(20) "CAIR NOx allowances held" or "hold CAIR NOx allowances" means the CAIR NOx allowances recorded by the administrator, or submitted to the administrator for recordation, in accordance with rules 3745-109-05, 3745-109-06 and 3745-109-08 of the Administrative Code, in a CAIR NOx allowance tacking system account.

(21) "CAIR NOx annual trading program" means a multi-state nitrogen oxides air pollution control and emission reduction program approved and administered by the administrator in accordance with 40 CFR Part 96, Subparts AA to II, and 40 CFR 51.123(o)(1) or 40 CFR 51.123(o)(2) or established by the administrator in accordance with 40 CFR Part 97, Subparts AA to II and 40 CFR 51.123(p) and 40 CFR 52.35, as a means of mitigating interstate transport of fine particulates and NOx.

(22) "CAIR NOx emissions limitation" means, for a CAIR NOx source, the tonnage equivalent, in NOx emissions in a control period, of the CAIR NOx allowances available for deduction for the source under paragraphs (D)(1) and (D)(2) of rule 3745-109-05 of the Administrative Code for the control period.

(23) "CAIR NOx ozone season allowance" means a limited authorization issued by a permitting authority or the administrator under provisions of a state implementation plan that are approved under 40 CFR 51.123(aa)(1) or (aa)(2) (and (bb)(1)), (bb)(2), (dd), or (ee), or under 40 CFR Part 97, Subpart EEEE or 40 CFR 97.388, to emit one ton of NOx during a control period of the specified calendar year for which the authorization is allocated or of any calendar year thereafter under the CAIR NOx ozone season trading program or a limited authorization issued by a permitting authority for a control period during 2003 through 2008 under the NOx budget trading program in accordance with 40 CFR 51.121(p) to emit one ton of NOx during a control period, provided that the provision in 40 CFR 51.121(b)(2)(ii)(E) shall not be used in applying this definition and the limited authorization shall not have been used to meet the allowance-holding requirement under the NOx budget trading program. An authorization to emit NOx that is not issued under provisions of a state implementation plan approved under 40 CFR 51.123(aa)(1) or (aa)(2) (and (bb)(1)), (bb)(2), (dd), or (ee) or 40 CFR Part 97, Subpart EEEE or 40 CFR 97.388 or under the NOx budget trading program as described in the prior sentence shall not be a CAIR NOx ozone season allowance.

(24) "CAIR NOx ozone season allowance deduction" or "deduct CAIR NOx ozone season allowances" means the permanent withdrawal of CAIR NOx ozone season allowances by the administrator from a compliance account, e.g., in order to account for a specified number of tons of total NOx emissions from all CAIR NOx ozone season units at a CAIR NOx ozone season source for a control period, determined in accordance with rule 3745-109-20 of the Administrative Code, or to account for excess emissions.

(25) "CAIR NOx ozone season allowance tracking system" means the system by which the administrator records allocations, deductions, and transfers of CAIR NOx ozone season allowances under the CAIR NOx ozone season trading program. Such allowances shall be allocated, held, deducted, or transferred only as whole allowances.

(26) "CAIR NOx ozone season allowance tracking system account" means an account in the CAIR NOx ozone season allowance tracking system established

by the administrator for purposes of recording the allocation, holding, transferring, or deducting of CAIR NOx ozone season allowances.

(27) "CAIR NOx ozone season allowances held" or "hold CAIR NOx ozone season allowances" means the CAIR NOx ozone season allowances recorded by the administrator, or submitted to the administrator for recordation, in accordance with rules 3745-109-18, 3745-109-19 and 3745-109-21 of the Administrative Code, in a CAIR NOx ozone season allowance tracking system account.

(28) "CAIR NOx ozone season emissions limitation" means, for a CAIR NOx ozone season source, the tonnage equivalent, in NOx emissions in a control period, of the CAIR NOx ozone season allowances available for deduction for the source under paragraphs (D)(1) and (D)(2) of rule 3745-109-18 of the Administrative Code for a control period.

(29) "CAIR NOx ozone season source" means, in regard to the CAIR NOx annual and SO2 trading programs, a source that is subject to the CAIR NOx ozone season trading program; in regard to the CAIR NOx ozone season program it means a source that includes one or more CAIR NOx ozone season units.

(30) "CAIR NOx ozone season trading program" means a multi-state nitrogen oxides air pollution control and emission reduction program approved and administered by the administrator in accordance with 40 CFR Part 96 Subparts, AAAA to IIII and 40 CFR 51.123(aa)(1) or 40 CFR 51.123(aa)(2) (and 40 CFR 51.123(bb)(1)), 40 CFR 51.123(bb)(2), or 40 CFR 51.123(dd) or established by the administrator in accordance with 40 CFR Part 97 Subparts AAAA to IIII and 40 CFR 51.123(ee) and 40 CFR 52.35, as a means of mitigating interstate transport of ozone and NOx.

(31) "CAIR NOx ozone season unit" means a unit that is subject to the CAIR NOx ozone season trading program under paragraph (C) this rule and, except for the purposes of paragraph (D) of this rule and rule 3745-109-17 of the Administrative Code, a CAIR NOx ozone season opt-in unit under rule 3745-109-21 of the Administrative Code.

(32) "CAIR NOx source" means, in regard to the CAIR NOx annual trading program, a source that includes one or more CAIR NOx units; in regard to the CAIR NOx ozone season and SO2 trading programs it means a source that is subject to the CAIR NOx annual trading program.

(33) "CAIR NOx unit" means a unit that is subject to the CAIR NOx annual trading program under paragraph (C) this rule and, except for the purposes of paragraph (D) of this rule and rule 3745-109-04 of the Administrative Code, a CAIR NOx opt-in unit under rule 3745-109-08 of the Administrative Code.

(34) "CAIR permit" means the legally binding and federally enforceable written document, or portion of such document, issued by the director under rules 3745-109-03, 3745-109-10 and 3745-109-16 of the Administrative Code, including

any permit revisions, specifying the CAIR NOx annual, SO2, or NOx ozone season trading program requirements applicable to a CAIR NOx, SO2, or NOx ozone season source, to each CAIR NOx, SO2, or NOx ozone season unit at the source, and to the owners and operators and the CAIR designated representative of the source and each such unit.

(35) "CAIR SO2 allowance" means a limited authorization issued by the administrator under the acid rain program, or by a permitting authority under provisions of a state implementation plan that are approved under 40 CFR 51.124(o)(1) or 40 CFR 51.124(2) or 40 CFR 51.124(r) or 40 CFR 97.288, to emit SO2 during the control period of the specified calendar year for which the authorization is allocated or of any calendar year thereafter under the CAIR SO2 trading program as follows:

(a) For one CAIR SO2 allowance allocated for a control period in a year before 2010, one ton of SO2, except as provided in paragraph (D)(2) of rule 3745-109-11 of the Administrative Code.

(b) For one CAIR SO2 allowance allocated for a control period in 2010 through 2014, 0.50 ton of SO2, except as provided in paragraph (D)(2) of rule 3745-109-11 of the Administrative Code.

(c) For one CAIR SO2 allowance allocated for a control period in 2015 or later, 0.35 ton of SO2, except as provided in paragraph (D)(2) of rule 3745-109-11 of the Administrative Code.

(d) An authorization to emit SO2 that is not issued under the acid rain program, under the provisions of a state implementation plan that are approved under 40 CFR 51.124(o)(1) or 40 CFR 51.124 (o)(2) or 40 CFR 51.124(r), or under 40 CFR 97.288 shall not be a CAIR SO2 allowance.

(36) "CAIR SO2 allowance deduction" or "deduct CAIR SO2 allowances" means the permanent withdrawal of CAIR SO2 allowances by the administrator from a compliance account, e.g., in order to account for a specified number of tons of total SO2 emissions from all CAIR SO2 units at a CAIR SO2 source for a control period, determined in accordance with rule 3745-109-13 of the Administrative Code, or to account for excess emissions.

(37) "CAIR SO2 allowance tracking system" means the system by which the administrator records allocations, deductions, and transfers of CAIR SO2 allowances under the CAIR SO2 trading program. This is the same system as the allowance tracking system under 40 CFR 72.2 by which the administrator records allocations, deduction, and transfers of acid rain SO2 allowances under the acid rain program.

(38) "CAIR SO2 allowance tracking system account" means an account in the CAIR SO2 allowance tracking system established by the administrator for purposes of recording the allocation, holding, transferring, or deducting of CAIR SO2

allowances. Such allowances will be allocated, held, deducted, or transferred only as whole allowances.

(39) "CAIR SO2 allowances held" or "hold CAIR SO2 allowances" means the CAIR SO2 allowances recorded by the administrator, or submitted to the administrator for recordation, in accordance with rules 3745-109-11, 3745-109-12 and 3745-109-14 of the Administrative Code or 40 CFR Part 73, in a CAIR SO2 allowance tracking system account.

(40) "CAIR SO2 emissions limitation" means, for a CAIR SO2 source, the tonnage equivalent, in SO2 emissions in a control period, of the CAIR SO2 allowances available for deduction for the source under paragraphs (D)(2) and (D)(3) of rule 3745-109-11 of the Administrative Code for the control period.

(41) "CAIR SO2 source" means, in regard to the CAIR NOx annual and ozone season trading programs, a source that is subject to the CAIR SO2 trading program; in regard to the CAIR SO2 trading program its means a source that includes one or more CAIR SO2 units.

(42) "CAIR SO2 trading program" means a multi-state sulfur dioxide air pollution control and emission reduction program approved and administered by the administrator in accordance with 40 CFR Part 96, Subparts AAA to III and 40 CFR 51.124(o)(1) or 40 CFR 51.124(o)(2) or established by the administrator in accordance with 40 CFR Part 97, Subparts AAA to III and 40 CFR 51.124(r) and 40 CFR 52.36, as a means of mitigating interstate transport of fine particulates and sulfur dioxide.

(43) "CAIR SO2 unit" means a unit that is subject to the CAIR SO2 trading program under paragraph (C) of this rule and, except for purposes of paragraph (D) of this rule, a CAIR SO2 opt-in unit under rule 3745-109-14 of the Administrative Code.

(44) "Clean Air Act" or "CAA" means the Clean Air Act, 42 USC 7401 to 7671q.

(45) "Coal" means any solid fuel classified as anthracite, bituminous, subbituminous, or lignite.

(46) "Coal-derived fuel" means any fuel (whether in a solid, liquid, or gaseous state) produced by the mechanical, thermal, or chemical processing of coal.

(47) "Coal-fired" means the following:

(a) Except for purposes of rules 3745-109-04 and 3745-109-17 of the Administrative Code, combusting any amount of coal or coal-derived fuel, alone or in combination with any amount of any other fuel, during any year.

(b) For purposes of rule 3745-109-04 and 3745-109-17 of the Administrative Code, combusting any amount of coal or coal-derived fuel, alone or in combination with any amount of any other fuel, during a specified year.

(c) For the purposes of rules 3745-109-09 to 3745-109-14 of the Administrative Code, combusting any amount of coal or coal-derived fuel, alone or in combination with any amount of any other fuel.

(48) "Cogeneration unit" means a stationary, fossil-fuel-fired boiler or stationary, fossil-fuel-fired combustion turbine that conforms to the following:

(a) Has equipment used to produce electricity and useful thermal energy for industrial, commercial, heating, or cooling purposes through the sequential use of energy.

(b) Except for units meeting the applicability requirements under paragraph (C)(4) of this rule, during the twelve-month period starting on the date the unit first produces electricity and during any calendar year after the calendar year in which the unit first produces electricity, produces the following:

(i) For a topping-cycle cogeneration unit the following:

(a) Useful thermal energy not less than five per cent of total energy output.

(b) Useful power that, when added to one-half of useful thermal energy produced, is not less then 42.5 per cent of total energy input, if useful thermal energy produced is fifteen per cent or more of total energy output, or not less than forty-five per cent of total energy input, if useful thermal energy produced is less than fifteen per cent of total energy output.

(ii) For a bottoming-cycle cogeneration unit, useful power not less than forty-five per cent of total energy input.

(c) Provided that the total energy input under paragraphs (B)(48)(b)(i)(b) and (B)(48)(b)(ii) of this rule shall equal the unit's total energy input from all fuel except biomass if the unit is a boiler.

(49) "Combustion turbine" means the following:

(a) An enclosed device comprising a compressor, a combustor, and a turbine and in which the flue gas resulting from the combustion of fuel in the combustor passes through the turbine, rotating the turbine.

(b) If the enclosed device under paragraph (B)(49)(a) of this rule is combined cycle, any associated duct burner, heat recovery steam generator and steam turbine.

(50) "Commence commercial operation" means, with regard to a unit, the following:

(a) To have begun to produce steam, gas, or other heated medium used to generate electricity for sale or use, including test generation, except as provided in paragraph (D) of this rule and paragraph (E)(8) of rules 3745-109-08, 3745-109-14, and 3745-109-21 of the Administrative Code.

(i) For a unit that is a CAIR NOx, SO2, or NOx ozone season unit under paragraph (C) of this rule on the later of November 15, 1990 or the date the unit commences commercial operation as defined in paragraph (B)(50)(a) of this rule and that subsequently undergoes a physical change (other than replacement of the unit by a unit at the same source), such date shall remain the unit's date of commencement of commercial operation of the unit, which shall continue to be treated as the same unit.

(ii) For a unit that is a CAIR NOx, SO2, or NOx ozone season unit under paragraph (C) of this rule on the later of November 15, 1990 or the date the unit commences commercial operation as defined in paragraph (B)(50)(a) of this rule and that is subsequently replaced by a unit at the same source (e.g., repowered), such date shall remain the replaced unit's date of commencement of commercial operation, and the replacement unit shall be treated as a separate unit with a separate date for commencement of commercial operation as defined in paragraph (B)(50)(a) or (B)(50)(b) of this rule as appropriate.

(b) Notwithstanding paragraph (B)(50)(a) of this rule and except as provided in paragraph (D) of this rule, for a unit that is not a CAIR NOx, SO2, or NOx ozone season unit under paragraph (C) of this rule on the later of November 15, 1990 or the date the unit commences commercial operation as defined in paragraph (B)(50)(a) of this rule, the unit's date for commencement of commercial operation shall be the date on which the unit becomes a CAIR NOx, SO2, or NOx ozone season unit under paragraph (C) of this rule.

(i) For a unit with a date for commencement of commercial operation as defined in paragraph (B)(50)(b) of this rule and that subsequently undergoes a physical change (other than replacement of the unit by a unit at the same source), such date shall remain the unit's date of commencement of commercial operation of the unit, which shall continue to be treated as the same unit.

(ii) For a unit with a date for commencement of commercial operation as defined in paragraph (B)(50)(b) of this rule and that is subsequently replaced by a unit at the same source (e.g., repowered), such date shall remain the replaced unit's date of commencement of commercial operation, and the replacement unit shall be treated as a separate unit with a separate date for commencement of commercial operation as

defined in paragraph (B)(50)(a) or (B)(50)(b) of this rule as appropriate.

(c) Notwithstanding paragraphs (B)(50)(a) and (B)(50)(b) of this rule, for a unit not serving a generator producing electricity for sale, the unit's date of commencement of operation shall also be the unit's date of commencement of commercial operation.

(51) "Commence operation" means:

(a) To have begun any mechanical, chemical, or electronic process, including, with regard to a unit, start-up of a unit's combustion chamber, except as provided in paragraph (E)(8) of rules 3745-109-08, 3745-109-14, and 3745-109-21 of the Administrative Code.

(i) For a unit that is a CAIR NOx, SO2, or NOx ozone season unit that undergoes a physical change (other than replacement of the unit by a unit at the same source), after the date the unit commences operation as defined in paragraph (B)(51)(a) of this rule, such date shall remain the unit's date of commencement of operation, which shall continue to be treated as the same unit.

(ii) For a unit that is a CAIR NOx, SO2, or NOx ozone season unit that is replaced by a unit at the same source (e.g., repowered), after the date the unit commences operation as defined in paragraph (B)(51)(a) of this rule, such date shall remain the replaced unit's date of commencement of operation, and the replacement unit shall be treated as a separate unit with a separate date for commencement of operation as defined in paragraph (B)(51)(a), (B)(51)(a)(i), or (B)(51)(a)(ii) of this rule as appropriate, except as provided in paragraph (E)(8) of rules 3745-109-08, 3745-109-14, and 3745-109-21 of the Administrative Code.

(b) Notwithstanding paragraph (B)(51)(a) of this rule, and solely for purposes of rule 3745-109-20 of the Administrative Code, for a unit that is not a CAIR NOx ozone season unit under paragraph (C)(4) of this rule (non-EGUs) on the later of November 15, 1990 or the date the unit commences operation as defined in paragraph (B)(51)(a) of this rule and that subsequently becomes such a CAIR NOx ozone season unit, the unit's date for commencement of operation shall be the date on which the unit becomes a CAIR NOx ozone season unit under paragraph (C)(4) of this rule.

(i) For a unit with a date of commencement of operation as defined in paragraph (B)(51)(b) of this rule and that subsequently undergoes a physical change (other than replacement of the unit by a unit at the same source), such date shall remain the date of commencement of operation of the unit, which shall continue to be treated as the same unit.

(ii) For a unit with a date for commencement of operation as defined in paragraph (B)(51)(b) of this rule and that is subsequently replaced by a unit at the same source (e.g., repowered), such date shall remain the replaced unit's date of commencement of operation, and the replacement unit shall be treated as a separate unit with a separate date for commencement of operation as defined in paragraph (B)(51)(a) or (B)(51)(b) of this rule as appropriate.

(52) "Common stack" means a single flue through which emissions from two or more units are exhausted.

(53) "Compliance account" means the following:

(a) For a CAIR NOx allowance tracking system account, established by the administrator for a CAIR NOx source under rule 3745-109-05 or 3745-109-08 of the Administrative Code, in which any CAIR NOx allowance allocations for the CAIR NOx units at the source are initially recorded and in which are held any CAIR NOx allowances available for use for a control period in order to meet the source's CAIR NOx emissions limitation in accordance with paragraph (D) of rule 3745-109-05 of the Administrative Code.

(b) For a CAIR SO2 allowance tracking system account, established by the administrator for a CAIR SO2 source subject to an acid rain emissions limitation under 40 CFR 73.31(a) or 40 CFR 73.31(b) or for any other CAIR SO2 source under rule 3745-109-11 or 3745-109-14 of the Administrative Code, in which any CAIR SO2 allowance allocations for the CAIR SO2 units at the source are initially recorded and in which are held any CAIR SO2 allowances available for use for a control period in order to meet the source's CAIR SO2 emissions limitation in accordance with paragraph (D) of rule 3745-109-11 of the Administrative Code.

(c) For a CAIR NOx ozone season allowance tracking system account, established by the administrator for a CAIR NOx ozone season source under rules 3745-109-18 and 3745-109-21 of the Administrative Code, in which any CAIR NOx ozone season allowance allocations for the CAIR NOx ozone season units at the source are initially recorded and in which are held any CAIR NOx ozone season allowances available for use for a control period in order to meet the source's CAIR NOx ozone season emissions limitation in accordance with paragraph (D) of rule 3745-109-18 of the Administrative Code.

(54) "CSP" means compliance supplement pool.

(55) "CO2" means carbon dioxide.

(56) "Continuous emission monitoring system" or "CEMS" means the equipment required under rule 3745-109-07, 3745-109-13, or 3745-109-20 of the

Administrative Code to sample, analyze, measure, and provide, by means of readings recorded at least once every fifteen minutes (using an automated data acquisition and handling system (DAHS), a permanent record of NOx or SO2 emissions, stack gas volumetric flow rate, stack gas moisture content, and oxygen or carbon dioxide concentration (as applicable)), in a manner consistent with 40 CFR Part 75. The following systems are the principal types of continuous emission monitoring systems required under rule 3745-109-07, 3745-109-13, or 3745-109-20 of the Administrative Code:

(a) A flow monitoring system, consisting of a stack flow rate monitor and an automated data acquisition and handling system and providing a permanent, continuous record of stack gas volumetric flow rate, in standard cubic feet per hour.

(b) A NOx concentration or SO2 monitoring system, consisting of a NOx or SO2 pollutant concentration monitor and an automated data acquisition and handling system and providing a permanent, continuous record of NOx or SO2 emissions, in parts per million.

(c) A NOx emission rate (or NOx-diluent) monitoring system, consisting of a NOx pollutant concentration monitor, a diluent gas (CO2 or O2) monitor, and an automated data acquisition and handling system and providing a permanent, continuous record of NOx concentration, in parts per million, diluent gas concentration, in per cent CO2 or O2; and NOx emission rate, in pounds per mmBtu.

(d) A moisture monitoring system, as defined in 40 CFR 75.11(b)(2) and providing a permanent, continuous record of the stack gas moisture content, in per cent H2O.

(e) A carbon dioxide monitoring system, consisting of a CO2 pollutant concentration monitor (or an oxygen monitor plus suitable mathematical equations from which the CO2 concentration is derived) and an automated data acquisition and handling system and providing a permanent, continuous record of CO2 emissions, in per cent CO2.

(f) An oxygen monitoring system, consisting of an O2 concentration monitor and an automated data acquisition and handling system and providing a permanent, continuous record of O2, in per cent O2.

(57) "Control period" means the following:

(a) For the purposes of the CAIR annual trading program, the period beginning January first of a calendar year, except as provided in paragraph (E)(3)(b) of this rule and ending on December thirty-first of the same year, inclusive.

(b) For the purposes of the CAIR ozone season trading program, the period beginning May first of a calendar year, except as provided in paragraph

(E)(3)(b) of this rule and ending on September thirtieth of the same year, inclusive.

(58) "Director" means the director of the Ohio environmental protection agency.

(59) "Electricity for sale under a firm contract to the electric grid" means electricity for sale where the capacity involved is intended to be available at all times during the period covered by a guaranteed commitment to deliver, even under adverse conditions.

(60) "Emissions" means air pollutants exhausted from a unit or source into the atmosphere, as measured, recorded, and reported to the administrator by the CAIR designated representative and as determined by the administrator in accordance with rule 3745-109-07, 3745-109-13, or 3745-109-20 of the Administrative Code.

(61) "Energy efficiency/renewable energy project" means any project that, during the ozone season, reduces end-use demand for electricity, including demand-side management practices, or displace electrical energy utilization through the use of wind power, solar power, biomass or landfill methane generation.

(62) "Excess emissions" means the following:

(a) For any ton of NOx emitted by the CAIR NOx or NOx ozone season units at a CAIR NOx or NOx ozone season source during a control period that exceeds the CAIR NOx or NOx ozone season emissions limitation for the source.

(b) For any ton, or portion of a ton, of sulfur dioxide emitted by the CAIR SO2 units at a CAIR SO2 source during a control period that exceeds the CAIR SO2 emissions limitation for the source, provided that any portion of a ton of excess emissions shall be treated as one ton of excess emissions.

(63) "Fossil fuel" means natural gas, petroleum, coal, or any form of solid, liquid, or gaseous fuel derived from such material.

(64) "Fossil-fuel-fired" means the following:

(a) For a unit meeting the applicability requirements under paragraph (C)(1) of this rule (EGUs), with regard to a unit, combusting any amount of fossil fuel in any calendar year.

(b) For a unit meeting the applicability requirements under paragraph (C)(4) of this rule (non-EGUs), with regard to a unit as follows:

(i) For units that commenced operation before January 1, 1996, the combustion of fossil fuel, alone or in combination with any other fuel, where fossil fuel actually combusted comprises more than fifty per cent

of the annual heat input, on a Btu basis, during 1995, or, if a unit had no heat input in 1995, during the last year of operation of the unit prior to 1995.

(ii) For units that commenced operation on or after January 1, 1996 and before January 1, 1997, the combustion of fossil fuel, alone or in combination with any other fuel, where fossil fuel actually combusted comprises more than fifty per cent of the annual heat input, on a Btu basis, during 1996.

(iii) For units that commence operation on or after January 1, 1997:

(a) The combustion of fossil fuel, alone or in combination with any other fuel, where fossil fuel actually combusted comprises more than fifty per cent of the annual heat input, on a Btu basis, during any year.

(b) The combustion of fossil fuel, alone or in combination with any other fuel, where fossil fuel is projected to comprise more than fifty per cent of the annual heat input, on a Btu basis, during any year, provided that the unit shall be "fossil fuel-fired" as of the date, during such year, on which the unit begins combusting fossil fuel.

(65) "Fuel oil" means any petroleum-based fuel (including diesel fuel or petroleum derivatives such as oil tar) and any recycled or blended petroleum products or petroleum by-products used as a fuel whether in a liquid, solid, or gaseous state.

(66) "General account" means a CAIR NOx, SO2, or NOx ozone season allowance tracking system account, established under rule 3745-109-05, 3745-109-11, or 3745-109-18 of the Administrative Code, that is not a compliance account.

(67) "Generator" means a device that produces electricity.

(68) "Gross electrical output" means, with regard to a cogeneration unit, electricity made available for use, including any such electricity used in the power production process (which process includes, but is not limited to, any on-site processing or treatment of fuel combusted at the unit and any on-site emission controls).

(69) "H2O" means water.

(70) "Heat input" means, with regard to a specified period of time, the product (in mmBtu per unit of time) of the gross calorific value of the fuel (in Btu per pound) divided by one million Btu per mmBtu and multiplied by the fuel feed rate into a combustion device (in pounds of fuel per unit time), as measured, recorded, and reported to the administrator by the CAIR designated representative and determined by the administrator in accordance with rule

3745-109-07, 3745-109-13, or 3745-109-20 of the Administrative Code and excluding the heat derived from preheated combustion air, recirculated flue gases, or exhaust from other sources.

(71) "Heat input rate" means the amount of heat input (in mmBtu) divided by unit operating time (in hours) or, with regard to a specific fuel, the amount of heat input attributed to the fuel (in mmBtu) divided by the unit operating time (in hours) during which the unit combusts the fuel.

(72) "Hg" means mercury.

(73) "Hg budget trading program" means a multi-state Hg air pollution control and emission reduction program approved and administered by the administrator accordance with Chapter 3745-108 of the Administrative Code, or established by the administrator under Section 111 of the Clean Air Act, as a means of reducing national Hg emissions.

(74) "Innovative technology project" means any project utilizing technology that has not been adequately demonstrated in practice, but that would have a substantial likelihood of reducing NOx ozone season emissions compared to current practices. An innovative technology project could include technology to decrease electrical energy or fuel use either in stationary or mobile sources.

(75) "kWh" means kilowatt hour.

(76) "Life-of-the-unit, firm power contractual arrangement" means a unit participation power sales agreement under which a utility or industrial customer reserves, or is entitled to receive, a specified amount or percentage of nameplate capacity and associated energy generated by any specified unit and pays its proportional amount of such unit's total costs, pursuant to a contract for one of the following:

(a) The life of the unit.

(b) A cumulative term of no less than thirty years, including contracts that permit an election for early termination.

(c) A period no less than twenty-five years or seventy per cent of the economic useful life of the unit determined as of the time the unit is built, with option rights to purchase or release some portion of the nameplate capacity and associated energy generated by the unit at the end of the period.

(77) "Maximum design heat input" means the maximum amount of fuel per hour (in Btu per hour) that a unit is capable of combusting on a steady state basis as of the initial installation of the unit as specified by the manufacturer of the unit.

(78) "MmBtu" means million British thermal units.

(79) "Monitoring system" means any monitoring system that meets the requirements of rule 3745-109-07, 3745-109-13, or 3745-109-20 of the Administrative Code, including a continuous emissions monitoring system, an alternative monitoring system, or an excepted monitoring system under 40 CFR Part 75.

(80) "Most stringent state or federal NOx or SO2 emissions limitation" means, with regard to a unit, the lowest NOx or SO2 emissions limitation (in terms of pounds per mmBtu) that is applicable to the unit under state or federal law, regardless of the averaging period to which the emissions limitation applies.

(81) "MWe" means mega watt electrical.

(82) "MWh" means megawatt-hour.

(83) "Nameplate capacity" means, starting from the initial installation of a generator, the maximum electrical generating output (in MWe) that the generator is capable of producing on a steady state basis and during continuous operation (when not restricted by seasonal or other deratings) as of such installation as specified by the manufacturer of the generator or, starting from the completion of any subsequent physical change in the generator resulting in an increase in the maximum electrical generating output (in MWe) that the generator is capable of producing on a steady state basis and during continuous operation (when not restricted by seasonal or other deratings), such increased maximum amount as of such completion as specified by the person conducting the physical change.

(84) "NOx" means all oxides of nitrogen which are determined to be ozone precursors, including, but not limited to, nitrogen oxide and nitrogen dioxide, but excluding nitrous oxide.

(85) "Oil-fired" means, for purposes of rule 3745-109-04 or 3745-109-17 of the Administrative Code, combusting fuel oil for more than 15.0 per cent of the annual heat input in a specified year and not qualifying as coal-fired.

(86) "Operator" means any person who operates, controls, or supervises a CAIR NOx, SO2, or NOx ozone season unit or a CAIR NOx, SO2, or NOx ozone season source and shall include, but not be limited to, any holding company, utility system, or plant manager of such a unit or source.

(87) "Owner" means any of the following persons:

(a) With regard to a CAIR NOx, SO2, or NOx ozone season source or a CAIR NOx, SO2, or NOx ozone season unit at a source, respectively:

(i) Any holder of any portion of the legal or equitable title in a CAIR NOx, SO2, or NOx ozone season unit at the source or the CAIR NOx, SO2, or NOx ozone season unit.

(ii) Any holder of a leasehold interest in a CAIR NOx, SO2, or NOx ozone season unit at the source or the CAIR NOx, SO2, or NOx ozone season unit.

(iii) Any purchaser of power from a CAIR NOx, SO2, or NOx ozone season unit at the source or the CAIR NOx, SO2, or NOx ozone season unit under a life-of-the-unit, firm power contractual arrangement; provided that, unless expressly provided for in a leasehold agreement, owner shall not include a passive lessor, or a person who has an equitable interest through such lessor, whose rental payments are not based (either directly or indirectly) on the revenues or income from such CAIR NOx, SO2, or NOx ozone season unit.

(b) With regard to any general account, any person who has an ownership interest with respect to the CAIR NOx, SO2, or NOx ozone season allowances held in the general account and who is subject to the binding agreement for the CAIR authorized account representative to represent the person's ownership interest with respect to CAIR NOx, SO2, or NOx ozone season allowances.

(88) "Ozone season" means the period beginning May first of a calendar year and ending on September thirtieth of the same year, inclusive.

(89) "Permitting authority" means the state air pollution control agency, local agency, other state agency, or other agency authorized by the administrator to issue or revise permits to meet the requirements of the CAIR NOx annual, CAIR SO2, and CAIR NOx ozone season trading program or, if no such agency has been so authorized, the administrator.

(90) "Potential electrical output capacity" means thirty-three per cent of a unit's maximum design heat input, divided by three thousand four hundred thirteen Btu per kWh, divided by one thousand kWh per MWh, and multiplied by eight thousand seven hundred sixty hours per year.

(91) "Receive" or "receipt of" means, when referring to the permitting authority or the administrator, to come into possession of a document, information, or correspondence (whether sent in hard copy or by authorized electronic transmission), as indicated in an official log, or by a notation made on the document, information, or correspondence, by the permitting authority or the administrator in the regular course of business.

(92) "Recordation," "record," or "recorded" means, with regard to CAIR NOx, SO2, or NOx ozone season allowances, the movement of CAIR NOx, SO2, or NOx ozone season allowances by the administrator into or between CAIR NOx, SO2, or NOx ozone season allowance tracking system accounts, for purposes of allocation, transfer, or deduction.

(93) "Reference method" means any direct test method of sampling and analyzing for an air pollutant as specified in 40 CFR 75.22.

(94) "Replacement, replace, or replaced" means, with regard to a unit, the demolishing of a unit, or the permanent shutdown and permanent disabling of a unit, and the construction of another unit (the replacement unit) to be used instead of the demolished or shut down unit (the replaced unit).

(95) "Repowered" means, with regard to a unit, replacement of a coal-fired boiler with one of the following coal-fired technologies at the same source as the coal-fired boiler:

(a) Atmospheric or pressurized fluidized bed combustion.

(b) Integrated gasification combined cycle.

(c) Magnetohydrodynamics.

(d) Direct and indirect coal-fired turbines.

(e) Integrated gasification fuel cells.

(f) As determined by the administrator, a derivative of one or more of the technologies under paragraphs (B)(95)(a) to (B)(95)(e) of this rule and any other coal-fired technology capable of controlling multiple combustion emissions simultaneously with improved boiler or generation efficiency and with significantly greater waste reduction relative to the performance of technology in widespread commercial use as of January 1, 2005.

(96) "Serial number" means, for a CAIR NOx, SO2, or NOx ozone season allowance, the unique identification number assigned to each CAIR NOx, SO2, or NOx ozone season allowance by the administrator.

(97) "Sequential use of energy" means either of the following:

(a) For a topping-cycle cogeneration unit, the use of reject heat from electricity production in a useful thermal energy application or process.

(b) For a bottoming-cycle cogeneration unit, the use of reject heat from useful thermal energy application or process in electricity production.

(98) "SO2" means sulfur dioxide.

(99) "Solid waste incineration unit" means a stationary, fossil-fuel-fired boiler or stationary, fossil-fuel-fired combustion turbine that is a "solid waste incineration unit" as defined in Section 129(g)(1) of the Clean Air Act.

(100) "Source" means all buildings, structures, or installations located in one or more contiguous or adjacent properties under common control of the same person or persons. For purposes of Section 502(c) of the Clean Air Act, a "source," including a "source" with multiple units, shall be considered a single "facility."

(101) "State" means the State of Ohio, or, where the context indicates, any of the states or the District of Columbia that adopts the CAIR NOx annual, the SO2, or the NOx ozone season trading program pursuant to 40 CFR 51.123(o)(1) or 40 CFR 51.123(o)(2) or 40 CFR 51.124(o)(1) or 40 CFR 51.124(o)(2).

(102) "Submit" or "serve" means to send or transmit a document, information, or correspondence to the person specified in accordance with the applicable regulation by any of the following means:

(a) In person.

(b) By United States postal service.

(c) Other means of dispatch or transmission and delivery.

Compliance with any submission or service deadline shall be determined by the date of dispatch, transmission, or mailing and not the date of receipt.

(103) "Title V operating permit" means a permit issued under Chapter 3745-77 of the Administrative Code.

(104) "Title V operating permit regulations" means Chapters 3745-77 and 3745-78 of the Administrative Code.

(105) "Ton" means two thousand pounds. For the purpose of determining compliance with the CAIR NOx, SO2, or NOx ozone season emissions limitation, total tons of NOx, SO2, or NOx ozone season emissions for a control period shall be calculated as the sum of all recorded hourly emissions (or the mass equivalent of the recorded hourly emission rates) in accordance with rule 3745-109-07, 3745-109-13, or 3745-109-20 of the Administrative Code, but with any remaining fraction of a ton equal to or greater than 0.50 tons deemed to equal one ton and any remaining fraction of a ton less than 0.50 tons deemed to equal zero tons.

(106) "Topping-cycle cogeneration unit" means a cogeneration unit in which the energy input to the unit is first used to produce useful power, including electricity, and at least some of the reject heat from the electricity production is then used to provide useful thermal energy.

(107) "Total energy input" means, with regard to a cogeneration unit, total energy of all forms supplied to the cogeneration unit, excluding energy produced by the cogeneration unit itself.

Each form of energy supplied shall be measured by the lower heating value of that form of energy calculated as follows:

LHV = HHV - 10.55(W + 9H)

Where:

LHV = lower heating value of fuel in Btu per pound.

HHV = higher heating value of fuel in Btu per pound.

W = Weight per cent of moisture in fuel.

H = Weight per cent of hydrogen in fuel.

(108) "Total energy output" means, with regard to a cogeneration unit, the sum of useful power and useful thermal energy produced by the cogeneration unit.

(109) "Unit" means the following:

(a) For a unit meeting the applicability requirements under paragraph (C)(1) of this rule (EGUs), a stationary, fossil-fuel-fired boiler or combustion turbine or other stationary, fossil-fuel-fired combustion device.

(b) For a unit meeting the applicability requirements under paragraph (C)(4) of this rule (non-EGUs), a fossil fuel-fired stationary boiler, combustion turbine, or combined cycle system.

(110) "Unit operating day" means a calendar day in which a unit combusts any fuel.

(111) "Unit operating hour" or "hour of unit operation" means an hour in which a unit combusts any fuel.

(112) "Useful power" means, with regard to a cogeneration unit, electricity or mechanical energy made available for use, excluding any such energy used in the power production process (which process includes, but is not limited to, any on-site processing or treatment of fuel combusted at the unit and any on-site emission controls).

(113) "Useful thermal energy" means, with regard to a cogeneration unit, thermal energy that conforms to the following:

(a) Made available to an industrial or commercial process (not a power production process), excluding any heat contained in condensate return or makeup water.

(b) Used in a heating application (e.g., space heating or domestic hot water heating).

(c) Used in a space cooling application (i.e., thermal energy used by an absorption chiller).

(114) "USEPA" means the United State environmental protection agency.

(115) "Utility power distribution system" means the portion of an electricity grid owned or operated by a utility and dedicated to delivering electricity to customers.

(C) Applicability.

The following units in the state shall be CAIR NOx, SO2, and NOx ozone season units, and any source that includes one or more such units shall be a CAIR NOx, SO2, and NOx ozone season source, subject to the requirements of this rule and rules 3745-109-02 to 3745-109-07, 3745-109-09 to 3745-109-13, and 3745-109-15 to 3745-109-20, respectively, of the Administrative Code:

(1) Except as provided in paragraphs (C)(3) and (C)(5) of this rule, any stationary, fossil-fuel-fired boiler or stationary, fossil-fuel fired combustion turbine serving at any time, since the later of November 15, 1990 or the start-up of a unit's combustion chamber, a generator with nameplate capacity of more than twenty-five MWe producing electricity for sale (EGUs).

(2) If a stationary boiler or stationary combustion turbine that, under paragraph (C)(1) of this rule, is not a CAIR NOx, CAIR SO2, and CAIR NOx ozone season unit begins to combust fossil fuel or to serve a generator with nameplate capacity of more than twenty-five MWe producing electricity for sale, the unit shall become a CAIR NOx, CAIR SO2, and CAIR NOx ozone season unit as provided in paragraph (C)(1) of this rule on the first date on which it both combusts fossil fuel and serves such generator.

The units in the state that meet the requirements set forth in paragraph (C)(3) or (C)(5) of this rule shall not be CAIR NOx, SO2 or NOx ozone season units.

(3) Any unit that is a CAIR NOx, SO2, and NOx ozone season unit under paragraph (C)(1) or (C)(2) of this rule that conforms to the following:

(a) Qualifies as a cogeneration unit during the twelve-month period starting on the date the unit first produces electricity and continuing to qualify as a cogeneration unit.

(b) Does not serve at any time, since the later of November 15, 1990 or the start-up of the unit's combustion chamber, a generator with nameplate capacity of more than twenty-five MWe and supplying in any calendar year more than one-third of the unit's potential electric output capacity or two hundred nineteen thousand MWh, whichever is greater, to any utility power distribution system for sale.

(c) If a unit qualifies as a cogeneration unit during the twelve-month period starting on the date the unit first produces electricity and meets the requirements of paragraphs (C)(3)(a) and (C)(3)(b) of this rule for at least one calendar year, but subsequently no longer meets all such requirements, the unit shall become CAIR NOx, SO2, and NOx ozone season unit under paragraph (C)(1) of this rule starting on the earlier of January first after the first calendar year during which the unit first no longer qualifies as a cogeneration unit or January first after the first calendar year during which the unit no longer meets the requirements of paragraph (C)(3)(b) of this rule.

(4) The following units that are subject to the applicability requirements of the NOx SIP call in paragraph (C) of rule 3745-14-01 of the Administrative Code and that are not CAIR NOx ozone season units under paragraphs (C)(1) and (C)(2) of this rule (non-EGUs) shall be subject to the requirements of this rule and rules 3745-109-15 to 3745-109-20 of the Administrative Code (non-EGUs):

(a) For units, other than cogeneration units, the following:

(i) For units commencing operation before January 1, 1997, a unit that has a maximum design heat input greater than two hundred fifty mmBtu per hour and that did not serve during 1995 or 1996 a generator producing electricity for sale under a firm contract to the electric grid.

(ii) For units commencing operation before January 1, 1997, a unit serving during 1995 or 1996 a generator that had a nameplate capacity greater than twenty-five MWe and produced electricity for sale under a firm contract to the electric grid.

(iii) For units commencing operation on or after January 1, 1997 and before January 1, 1999, a unit that has a maximum design heat input greater than two hundred fifty mmBtu per hour and that did not serve during 1997 or 1998 a generator producing electricity for sale under a firm contract to the electric grid.

(iv) For units commencing operation on or after January 1, 1997 and before January 1, 1999, a unit serving during 1997 or 1998 a generator that had a nameplate capacity greater than twenty-five MWe and produced electricity for sale under a firm contract to the electric grid.

(v) For units commencing operation on or after January 1, 1999, a unit with a maximum design heat input greater than two hundred fifty mmBtu per hour that does either of the following:

(a) At no time serves a generator producing electricity for sale.

(b) At any time serves a generator producing electricity for sale, if any such generator has a nameplate capacity of twenty-five MWe or less and has the potential to use no more than fifty per cent of the potential electrical output capacity of the unit.

(vi) For units commencing operation on or after January 1, 1999, a unit serving at any time a generator that has a nameplate capacity greater than twenty-five MWe and produces electricity for sale.

(b) For cogeneration units, the following:

(i) For units commencing operation before January 1, 1997, a unit with a maximum design heat input greater than two hundred fifty mmBtu per hour and qualifying as an unaffected unit under 40 CFR 72.6(b)(4) under the "Acid Rain Program" for 1995 and 1996.

(ii) For units commencing operation before January 1, 1997, a unit serving during 1995 or 1996 a generator with a nameplate capacity greater than twenty-five MWe and failing to qualify as an unaffected unit under 40 CFR 72.6(b)(4) for 1995 or 1996 under the "Acid Rain Program."

(iii) For units commencing operation in 1997 or 1998, a unit with a maximum design heat input greater than two hundred fifty mmBtu per hour and qualifying as an unaffected unit under 40 CFR 72.6(b)(4) under the "Acid Rain Program" for 1997 and 1998.

(iv) For units commencing operation in 1997 or 1998, a unit serving during 1997 or 1998 a generator with a nameplate capacity grater than twenty-five MWe and failing to qualify as an unaffected unit under 40 CFR 72.6(b)(4) for 1997 or 1998 under the "Acid Rain Program."

(v) For units commencing on or after January 1, 1999, a unit with a maximum design heat input greater than two hundred fifty mmBtu per hour and qualifying as an unaffected unit under 40 CFR 72.6(b)(4) under the "Acid Rain Program" for each year.

(vi) For units commencing operation on or after January 1, 1999, a unit serving at any time a generator with a nameplate capacity greater than twenty-five MWe and failing to qualify as an unaffected unit under 40 CFR 72.6(b)(4) under the "Acid Rain Program" for any year.

(5) Any unit that is a CAIR NOx, SO2, and NOx ozone season unit under paragraph (C)(1) or (C)(2) of this rule that does the following:

(a) Commences operation before January 1, 1985 and qualifies as a solid waste incineration unit; and with an average annual fuel consumption of non-fossil fuel for 1987-1987 exceeding eighty per cent (on a Btu basis) and an average annual fule consumption of non-fossil fuel for any three

consecutive calendar years after 1990 exceeding eighty per cent (on a Btu basis).

(b) Commences operation after January 1, 1985 and qualifies as a solid waste incineration unit; and with an average annual fuel consumption of non-fossil fuel for the first three calendar years of operation exceeding eighty per cent (on a Btu basis) and an average annual fuel consumption of non-fossil fuel for any three consecutive calendar years after 1990 exceeding eighty per cent (on a Btu basis).

(c) If a unit qualifies as a solid waste incineration unit and meets the requirements of paragraph (C)(5)(a) or (C)(5)(b) of this rule for at least three consecutive calendar years, but subsequently no longer meets all such requirements, the unit shall become a CAIR NOx, SO2, and CAIR NOx ozone season unit starting on the earlier of January first after the first calendar year during which the unit first no longer qualifies as a solid waste incineration unit or January first after the first three consecutive calendar years after 1990 for which the unit has an average annual fuel consumption of fossil fuel of twenty per cent or more.

(D) Retired unit exemption.

(1) This paragraph applies to any CAIR NOx, SO2, or NOx ozone season unit, other than a CAIR NOx, SO2, or NOx ozone season opt-in unit, that is permanently retired.

(a) Any CAIR NOx, SO2, or NOx ozone season unit that is permanently retired and is not a CAIR NOx, SO2, or NOx ozone season opt-in unit under rule 3745-109-08, 3745-109-14, or 3745-109-21 of the Administrative Code shall be exempt from the CAIR NOx annual, the SO2, or the NOx ozone season trading program, except for the provisions of paragraphs (B), (C), (D), (E)(3)(d) to (E)(3)(g), (F) and (G) of this rule and rules 3745-109-02, 3745-109-04 to 3745-109-06, 3745-109-09, 3745-109-11, 3745-109-12, 3745-109-15 and 3745-109-17 to 3745-109-19 of the Administrative Code, respectively.

(b) The exemption under paragraph (D)(1)(a) of this rule shall become effective the day on which the CAIR NOx, SO2, or NOx ozone season unit is permanently retired. Within thirty days of the unit's permanent retirement, the CAIR designated representative shall submit a statement to the director otherwise responsible for administering any CAIR permit for the unit and shall submit a copy of the statement to the administrator. The statement shall state, in a format prescribed by the director, that the unit was permanently retired on a specific date and shall comply with paragraph (D)(2) of this rule.

(c) After receipt of the statement under paragraph (D)(1)(b) of this rule, the director shall amend any permit under rule 3745-109-03, 3745-109-10, or

3745-109-16 of the Administrative Code covering the source at which the unit is located to add the provisions and requirements of the exemption under paragraphs (D)(1)(a) and (D)(1)(b) of this rule.

(2) Special provisions.

(a) A unit exempt under paragraph (D)(1) of this rule shall not emit any NOx or SO2 starting on the date that the exemption takes effect.

(b) The director shall allocate CAIR NOx or NOx ozone season allowances under rule 3745-109-04 or 3745-109-17 of the Administrative Code to a unit exempt under paragraph (D)(1) of this rule.

(c) For a period of five years from the date the records are created, the owners and operators of a unit exempt under paragraph (D)(1) of this rule shall retain, at the source that includes the unit, records demonstrating that the unit is permanently retired. The five-year period for keeping records may be extended for cause, at any time before the end of the period, in writing by the director or the administrator. The owners and operators bear the burden of proof that the unit is permanently retired.

(d) The owners and operators and, to the extent applicable, the CAIR designated representative of a unit exempt under paragraph (D)(1) of this rule shall comply with the requirements of the CAIR NOx annual, SO2, or NOx ozone season trading program concerning all periods for which the exemption is not in effect, even if such requirements arise, or must be complied with, after the exemption takes effect.

(e) A unit exempt under paragraph (D)(1) of this rule and located at a source that is required, or but for this exemption would be required, to have a Title V operating permit shall not resume operation unless the CAIR designated representative of the source submits a complete CAIR permit application under paragraph (C) of rule 3745-109-03 of the Administrative Code or rule 3745-109-16 of the Administrative Code for the unit not less than eighteen months (or such lesser time provided by the director) before the later of January 1, 2009 or the date on which the unit resumes operation.

(f) A unit exempt under paragraph (D)(1) of this rule and located at a source that is required, or but for this exemption would be required, to have a Title V operating permit shall not resume operation unless the CAIR designated representative of the source submits a complete CAIR permit application under paragraph (C) of rule 3745-109-10 of the Administrative Code for the unit not less than eighteen months (or such lesser time provided by the director) before the later of January 1, 2010 or the date on which the unit resumes operation.

(g) On the earlier of the following dates, a unit exempt under paragraph (D)(1) of this rule shall lose its exemption:

(i) The date on which the CAIR designated representative submits a CAIR permit application for the unit under paragraph (D)(2)(e) or (D)(2)(f) of this rule.

(ii) The date on which the CAIR designated representative is required under paragraph (D)(2)(e) or (D)(2)(f) of this rule to submit a CAIR permit application for the unit.

(iii) The date on which the unit resumes operation, if the CAIR designated representative is not required to submit a CAIR permit application for the unit.

(h) For the purpose of applying monitoring, reporting, and record keeping requirements under rule 3745-109-07, 3745-109-13, or 3745-109-20 of the Administrative Code, a unit that loses its exemption under paragraph (D)(1) of this rule shall be treated as a unit that commences commercial operation on the first date on which the unit resumes operation.

(E) Standard requirements.

(1) Permit requirements.

(a) The CAIR designated representative of each CAIR NOx, SO2, or NOx ozone season source required to have a Title V operating permit and each CAIR NOx,, SO2, or NOx ozone season unit required to have a Title V operating permit at the source shall do the following:

(i) Submit to the director a complete CAIR permit application under paragraph (C) of rule 3745-109-03 of the Administrative Code, rule 3745-109-10 of the Administrative Code, or rule 3745-109-16 of the Administrative Code in accordance with the deadlines specified in rule 3745-109-03 of the Administrative Code, rule 3745-109-10 of the Administrative Code, or rule 3745-109-16 of the Administrative Code.

(ii) Submit in a timely manner any supplemental information that the director determines is necessary in order to review a CAIR permit application and issue or deny a CAIR permit.

(b) The owners and operators of each CAIR NOx, SO2, or NOx ozone season source required to have a Title V operating permit and each CAIR NOx, SO2, or NOx ozone season unit required to have a Title V operating permit at the source shall have a CAIR permit issued by the director under rule 3745-109-03, 3745-109-10, or 3745-109-16 of the Administrative Code for the source and operate the source and the unit in compliance with such CAIR permit.

(c) Except as provided in rule 3745-109-08, 3745-109-14, or 3745-109-21 of the Administrative Code, the owners and operators of a CAIR NOx, SO2, or NOx ozone season source that is not otherwise required to have a Title V operating permit and each CAIR NOx, SO2, or NOx ozone season unit that is not otherwise required to have a Title V operating permit are not required to submit a CAIR permit application, and to have a CAIR permit, under rule 3745-109-03, 3745-109-10, or 3745-109-16 of the Administrative Code for such CAIR NOx, SO2, or NOx ozone season source and such CAIR NOx, SO2, or NOx ozone season unit.

(2) Monitoring, reporting, and record keeping requirements.

(a) The owners and operators, and the CAIR designated representative, of each CAIR NOx, SO2, or NOx ozone season source and each CAIR NOx, SO2, or NOx ozone season unit at the source shall comply with the monitoring, reporting, and record keeping requirements of rule 3745-109-07, 3745-109-13, or 3745-109-20 of the Administrative Code.

(b) The emissions measurements recorded and reported in accordance with rule 3745-109-07, 3745-109-13, or 3745-109-20 of the Administrative Code shall be used to determine compliance by each CAIR NOx, SO2, or NOx ozone season source with the CAIR NOx, SO2, or NOx ozone season emissions limitation under paragraph (E)(3) of this rule.

(3) NOx, SO2, or NOx ozone season emission requirements.

(a) As of the allowance transfer deadline for a control period, the owners and operators of each CAIR NOx or NOx ozone season source and each CAIR NOx or NOx ozone season unit at the source shall hold, in the source's compliance account, CAIR NOx or NOx ozone season allowances available for compliance deductions for the control period under paragraph (D)(1) of rule 3745-109-05 of the Administrative Code or rule 3745-109-18 of the Administrative Code in an amount not less than the tons of total NOx emissions for the control period from all CAIR NOx or NOx ozone season units at the source, as determined in accordance with rule 3745-109-07 or rule 3745-109-20 of the Administrative Code.

As of the allowance transfer deadline for a control period, the owners and operators of each CAIR SO2 source and each CAIR SO2 unit at the source shall hold, in the source's compliance account, a tonnage equivalent in CAIR SO2 allowances available for compliance deductions for the control period, as determined in accordance with paragraphs (D)(1) and (D)(2) of rule 3745-109-11 of the Administrative Code, not less than the tons of total SO2 emissions for the control period from all CAIR SO2 units at the source, as determined in accordance with rule 3745-109-13 of the Administrative Code.

(b) A CAIR NOx unit shall be subject to the requirements under paragraph (E)(3)(a) of this rule for the control period starting on the later of January 1, 2009 or the deadline for meeting the unit's monitor certification requirements under paragraph (A)(2)(a), (A)(2)(b) or (A)(2)(e) of rule 3745-109-07 of the Administrative Code and for each control period thereafter.

A CAIR SO2 unit shall be subject to the requirements under paragraph (E)(3)(a) of this rule for the control period starting on the later of January 1, 2010 or the deadline for meeting the unit's monitor certification requirements under paragraph (A)(2)(a), (A)(2)(b) or (A)(2)(e) of rule 3745-109-13 of the Administrative Code and for each control period thereafter.

A CAIR NOx ozone season unit shall be subject to the requirements under paragraph (E)(3)(a) of this rule for the control period starting on the later of May 1, 2009 or the deadline for meeting the unit's monitor certification requirements under paragraph (A)(2)(a), (A)(2)(b), (A)(2)(c) or (A)(2)(g) of rule 3745-109-20 of the Administrative Code and for each control period thereafter.

(c) A CAIR NOx, SO2, or NOx ozone season allowance shall not be deducted, for compliance with the requirements under paragraph (E)(3)(a) of this rule, for a control period in a calendar year before the year for which the CAIR NOx, SO2, or NOx ozone season allowance was allocated.

(d) CAIR NOx, SO2, or NOx ozone season allowances shall be held in, deducted from, or transferred into or among CAIR NOx, SO2, or NOx ozone season allowance tracking system accounts in accordance with rule 3745-109-04, 3745-109-05, 3745-109-06, 3745-109-08, 3745-109-11, 3745-109-12, 3745-109-14, 3745-109-17, 3745-109-18, 3745-109-19, or 3745-109-21 of the Administrative Code.

(e) A CAIR NOx or NOx ozone season allowance is a limited authorization to emit one ton of NOx in accordance with the CAIR NOx annual or ozone season trading program. No provision of the CAIR NOx annual or ozone season trading program, the CAIR permit application, the CAIR permit, or an exemption under paragraph (D) of this rule and no provision of law shall be construed to limit the authority of the United States or the state of Ohio to terminate or limit such authorization.

A CAIR SO2 allowance is a limited authorization to emit SO2 in accordance with the CAIR SO2 trading program. No provision of the CAIR SO2 trading program, the CAIR permit application, the CAIR permit, or an exemption under paragraph (D) of this rule and no provision of law shall be construed to limit the authority of the United States or the state of Ohio to terminate or limit such authorization.

(f) A CAIR NOx, SO2, or NOx ozone season allowance does not constitute a property right.

(g) Upon recordation by the administrator under rules 3745-109-05, 3745-109-06, or 3745-109-08 of the Administrative Code, every allocation, transfer, or deduction of a CAIR NOx allowance to or from a CAIR NOx source's compliance account is incorporated automatically in any CAIR permit of the source.

Upon recordation by the administrator under rule 3745-109-11, 3745-109-12 or 3745-109-14 of the Administrative Code, every allocation, transfer, or deduction of a CAIR SO2 allowance to or from a CAIR SO2 source's compliance account is incorporated automatically in any CAIR permit of the source.

Upon recordation by the administrator under rules 3745-109-18, 3745-109-19 and 3745-109-21 of the Administrative Code, every allocation, transfer, or deduction of a CAIR NOx ozone season allowance to or from a CAIR NOx ozone season sources compliance account is incorporated automatically in any CAIR permit of the source.

(4) Excess emissions requirements.

(a) If a CAIR NOx, SO2, or NOx ozone season source emits NOx or SO2 during any control period in excess of the CAIR NOx, SO2, or NOx ozone season emissions limitation, then the following apply:

(i) The owners and operators of the source and each CAIR NOx or NOx ozone season unit at the source shall surrender the CAIR NOx or NOx ozone season allowances required for deduction under paragraph (D)(4)(a) of rule 3745-109-05 of the Administrative Code or rule 3745-109-18 of the Administrative Code and pay any fine, penalty, or assessment or comply with any other remedy imposed, for the same violations, under the Clean Air Act or applicable state law.

The owners and operators of the source and each CAIR SO2 unit at the source shall surrender the CAIR SO2 allowances required for deduction under paragraph (D)(4)(a) of rule 3745-109-11 of the Administrative Code and pay any fine, penalty, or assessment or comply with any other remedy imposed, for the same violations, under the Clean Air Act or applicable state law.

(ii) Each ton of such excess emissions and each day of such control period shall constitute a separate violation of this rule, the Clean Air Act, and applicable state law.

(5) Record keeping and reporting requirements.

(a) Unless otherwise provided, the owners and operators of the CAIR NOx, SO2, or NOx ozone season source and each CAIR NOx, SO2, or NOx

ozone season unit at the source shall keep on site at the source each of the following documents for a period of five years from the date the document is created. This period may be extended for cause, at any time before the end of five years, in writing by the director or the administrator.

(i) The certificate of representation under paragraph (D) of rule 3745-109-02 of the Administrative Code, rule 3745-109-09 of the Administrative Code, or rule 3745-109-15 of the Administrative Code for the CAIR designated representative for the source and each CAIR NOx, SO2, or NOx ozone season unit at the source and all documents that demonstrate the truth of the statements in the certificate of representation; provided that the certificate and documents shall be retained on site at the source beyond such five-year period until such documents are superseded because of the submission of a new certificate of representation under paragraph (D) of rule 3745-109-02 of the Administrative Code, rule 3745-109-09 of the Administrative Code, or rule 3745-109-15 of the Administrative Code changing the CAIR designated representative.

(ii) All emissions monitoring information, in accordance with rule 3745-109-07, 3745-109-13, or 3745-109-20 of the Administrative Code, provided that to the extent that rule 3745-109-07, 3745-109-13, or 3745-109-20 of the Administrative Code provides for a three-year period for record keeping, the three-year period shall apply.

(iii) Copies of all reports, compliance certifications, and other submissions and all records made or required under the CAIR NOx annual, SO2, or NOx ozone season trading program.

(iv) Copies of all documents used to complete a CAIR permit application and any other submission under the CAIR NOx annual, SO2, or NOx ozone season trading program or to demonstrate compliance with the requirements of the CAIR NOx annual, SO2, or NOx ozone season trading program.

(b) The CAIR designated representative of a CAIR NOx, SO2, or NOx ozone season source and each CAIR NOx, SO2, or NOx ozone season unit at the source shall submit the reports required under the CAIR NOx annual, SO2, or NOx ozone season trading program, including those under rule 3745-109-07, 3745-109-13, or 3745-109-20 of the Administrative Code.

(6) Liability.

(a) Each CAIR NOx, SO2, or NOx ozone season source and each CAIR NOx, SO2, or NOx ozone season unit shall meet the requirements of the CAIR NOx annual, SO2, or NOx ozone season trading program.

(b) Any provision of the CAIR NOx annual, SO2, or NOx ozone season trading program that applies to a CAIR NOx, SO2, or NOx ozone season source or the CAIR designated representative of a CAIR NOx, SO2, or NOx ozone season source shall also apply to the owners and operators of such source and of the CAIR NOx, SO2, or NOx ozone season units at the source.

(c) Any provision of the CAIR NOx annual, SO2, or NOx ozone season trading program that applies to a CAIR NOx, SO2, or NOx ozone season unit or the CAIR designated representative of a CAIR NOx, SO2, or NOx ozone season unit shall also apply to the owners and operators of such unit.

(7) Effect on other authorities. No provision of the CAIR NOx annual, SO2, or NOx ozone season trading program, a CAIR permit application, a CAIR permit, or an exemption under paragraph (D) of this rule shall be construed as exempting or excluding the owners and operators, and the CAIR designated representative, of a CAIR NOx, SO2, or NOx ozone season source or CAIR NOx, SO2, or NOx ozone season unit from compliance with any other provision of the applicable, approved state implementation plan, a federally enforceable permit, or the Clean Air Act.

(F) Computation of time.

(1) Unless otherwise stated, any time period scheduled, under the CAIR NOx annual, SO2, or NOx ozone season trading program, to begin on the occurrence of an act or event shall begin on the day the act or event occurs.

(2) Unless otherwise stated, any time period scheduled, under the CAIR NOx annual, SO2, or NOx ozone season trading program, to begin before the occurrence of an act or event shall be computed so that the period ends the day before the act or event occurs.

(3) Unless otherwise stated, if the final day of any time period, under the CAIR NOx annual, SO2, or NOx ozone season trading program, falls on a weekend or a state or federal holiday, the time period shall be extended to the next business day.

(G) Appeal procedures.

(1) The appeal procedures for decisions of the administrator under the CAIR NOx annual, SO2 and CAIR NOx ozone season trading programs are set forth in 40 CFR Part 78.

(2) Final decisions of the director made pursuant to these rules may be appealed to the environmental review appeals commission pursuant to section 3745.04 of the Revised Code. Environmental review appeals commission appeal procedures are set forth in agency 3746 of the Administrative Code.

(H) Referenced materials. This chapter includes references to certain matter or materials. The text of the referenced materials is not included in the rules contained in this chapter. Information on the availability of the referenced materials as well as the date of, and/or the particular edition or version of the material is included in this rule. For materials subject to change, only the specific versions specified in this rule are referenced. Material is referenced as it exists on the effective date of this rule. Except for subsequent annual publication of existing (unmodified) Code of Federal Regulation compilations, any amendment or revision to a referenced document is not applicable unless and until this rule has been amended to specify the new dates.

(1) Availability. The referenced materials are available as follows:

(a) Clean Air Act as defined in this rule. Information and copies may be obtained by writing to: "Superintendent of Documents, Attn: New Orders, PO Box 371954, Pittsburgh, PA 15250-7954." The full text of the Act as amended in 1990 is also available in electronic format at www.epa.gov/oar/caa/. A copy of the Act is also available for inspection and copying at most public libraries and "The State Library of Ohio."

(b) Code of Federal Regulations, Federal Register, and United States Code. Information and copies may be obtained by writing to: "Superintendent of Documents, Attn: New Orders, PO Box 371954, Pittsburgh, PA 15250-7954." The full text of the CFR is also available in electronic format at www.gpo.gov/fdsys. The CFR, Federal Register, and United States Code compilations are also available for inspection and copying at most Ohio public libraries and "The State Library of Ohio."

(2) Referenced materials.

(a) 40 CFR 51.121; Findings and requirements for submission of State implementation plan revisions relating to emissions of oxides of nitrogen;" 63 FR 57491, Oct. 27, 1998, as amended at 63 FR 71225, Dec. 24, 1998; 64 FR 26305, May 14, 1999; 65 FR 11230, Mar. 2, 2000; 65 FR 56251, Sept. 18, 2000; 69 FR 21642, Apr. 21, 2004; 70 FR 25317, May 12, 2005; 70 FR 51597, Aug. 31, 2005, 73 FR 21538, Apr. 22, 2008.

(b) 40 CFR 51.123; "Findings and requirements for submission of State implementation plan revisions relating to emissions of oxides of nitrogen pursuant to the Clean Air Interstate Rule;" 70 FR 25319, May 12, 2005, as amended at 71 FR 25301, 25370, Apr. 28, 2006; 71 FR 74793, Dec. 13, 2006, 72 FR 59203, Oct. 19, 2007.

(c) 40 CFR 51.124; "Findings and requirements for submission of State implementation plan revisions relating to emissions of sulfur dioxide pursuant to the Clean Air Interstate Rule;" 70 FR 25328, May 12, 2005, as amended at 71 FR 25302, 25372, Apr. 28, 2006; 71 FR 74793, Dec. 13, 2006, 72 FR 59204, Oct. 19, 2007.

(d) 40 CFR 72.2; "Definitions;" 58 FR 3650, Jan. 11, 1993; as amended at 58 FR 15647, Mar. 23, 1993; 58 FR 33770, June 21, 1993; 58 FR 40747, July 30, 1993; 60 FR 17111, Apr. 4, 1995; 60 FR 18468, Apr. 11, 1995; 60 FR 26514, May 17, 1995; 62 FR 55475, Oct. 24, 1997; 63 FR 57498, Oct. 27, 1998; 63 FR 68404, Dec. 11, 1998; 64 FR 25842, May 13, 1999; 64 FR 28586, May 26, 1999; 67 FR 40420, June 12, 2002; 67 FR 53504, Aug. 16, 2002; 70 FR 25333, May 12, 2005; 70 FR 28690, May 18, 2005,72 FR 51527, September 7, 2007.

(e) 40 CFR 72.6; "Applicability;" 58 FR 3650, Jan. 11, 1993, as amended at 58 FR 15648, Mar. 23, 1993; 62 FR 55475, Oct. 24, 1997; 64 FR 28588, May 26, 1999; 66 FR 12978, Mar. 1, 2001.

(f) 40 CFR 72.8; "Retired units exemption;" 62 FR 55477, Oct. 24, 1997; 62 FR 66279, Dec. 18, 1997, as amended at 71 FR 25377, Apr. 28, 2006.

(g) 40 CFR 73.31; "Establishment of accounts;" 58 FR 3687, Jan. 11, 1993; 58 FR 40747, July 30, 1993, as amended at 71 FR 25378, Apr. 28, 2006; 70 FR 25335, May 12, 2005.

(h) 40 CFR 73.35; "Compliance;" 58 FR 3691, Jan. 11, 1993, as amended at 60 FR 17114, Apr. 4, 1995; 64 FR 25842, May 13, 1999; 70 FR 25335, May 12, 2005.

(i) 40 CFR 74.42; "Limitation on transfers;" 70 FR 25336, May 12, 2005.

(j) 40 CFR 74.47; "Transfer of allowances from the replacement of thermal energy--combustion sources;" 60 FR 17115, Apr. 4, 1995, as amended at 63 FR 18841, 18842, Apr. 16, 1998; 70 FR 25337, May 12, 2005.

(k) 40 CFR 75.11; "Specific provisions for monitoring SO2 emissions (SO2 and flow monitors);" 58 FR 3701, Jan. 11, 1993; as amended at 60 FR 26520, 26566, May 17, 1995; 61 FR 59157, Nov. 20, 1996; 63 FR 57499, Oct. 27, 1998; 64 FR 28590, May 26, 1999; 67 FR 40423, June 12, 2002, 73 FR 4342, Jan. 24, 2008.

(l) 40 CFR 75.12; "Specific provisions for monitoring NOx emission rate (NOx-diluent monitoring systems);" 58 FR 3701, Jan. 11, 1993, as amended at 60 FR 26520, May 17, 1995; 63 FR 57499, Oct. 27, 1998; 64 FR 28591, May 26, 1999; 67 FR 40423, June 12, 2002, 73 FR 4342, Jan. 24, 2008.

(m) 40 CFR 75.16; "Special provisions for monitoring emissions from common, bypass, and multiple stacks for SO2 emissions and heat input determinations;" 60 FR 26522, May 17, 1995; as amended at 61 FR 25582, May 22, 1996; 61 FR 59158, Nov. 20, 1996; 64 FR 28591, May 26, 1999; 67 FR 40423, June 12, 2002; 67 FR 53504, Aug. 16, 2002, 73 FR 4343, Jan. 24, 2008.

(n) 40 CFR 75.17; "Specific provisions for monitoring emissions from common, bypass, and multiple stacks for NOx emission rate;" 58 FR 3701, Jan. 11, 1993, as amended at 60 FR 26523, May 17, 1995; 63 FR 57499, Oct. 27, 1998; 64 FR 28592, May 26, 1999; 67 FR 40424, June 12, 2002, 73 FR 4343, Jan. 24, 2008.

(o) 40 CFR 75.19; "Optional SO2, NO, and CO2 emissions calculation for low mass emissions (LME) units;" 63 FR 57500, Oct. 27, 1998; as amended at 64 FR 28592, May 26, 1999; 64 FR 37582, July 12, 1999; 67 FR 40424, 40425, June 12, 2002; 67 FR 53504, Aug. 16, 2002, 73 FR 4344, Jan. 24, 2008.

(p) 40 CFR 75.20; "Initial certification and recertification procedures;" 58 FR 3701, Jan. 11, 1993; as amended at 60 FR 26524, May 17, 1995; 60 FR 40296, Aug. 8, 1995; 61 FR 59158, Nov. 20, 1996; 63 FR 57506, Oct. 27, 1998; 64 FR 28592, May 26, 1999; 67 FR 40431, June 12, 2002, 70 FR 28678, May 18, 2005; 72 FR 51527, Sept. 7, 2007; 73 FR 4345, Jan. 24, 2008.

(q) 40 CFR 75.21; "Quality assurance and quality control requirements;" 58 FR 3701, Jan. 11, 1993; as amended at 60 FR 26527, 26566, May 17, 1995; 61 FR 25582, May 22, 1996; 61 FR 59159, Nov. 20, 1996; 64 FR 28599, May 26, 1999; 67 FR 40433, June 12, 2002; 67 FR 53505, Aug. 16, 2002; 70 FR 28679, May 18, 2005, 73 FR 4345, Jan. 24, 2008.

(r) 40 CFR 75.22; "Reference test methods;" 58 FR 3701, Jan. 11, 1993; as amended at 60 FR 26528, May 17, 1995; 64 FR 28600, May 26, 1999; 67 FR 40433, June 12, 2002; 67 FR 53505, Aug. 16, 2002; 70 FR 28679, May 18, 2005, 73 FR 4345, Jan. 24, 2008.

(s) 40 CFR 75.31; "Initial missing data procedures;" 64 FR 28601, May 26, 1999; as amended at 67 FR 40433, June 12, 2002; 70 FR 28679, May 18, 2005, 73 FR 4346, Jan. 24, 2008.

(t) 40 CFR 75.34; "Units with add-on emission controls;" 60 FR 26567, May 17, 1995; as amended at 61 FR 59160, Nov. 20, 1996; 64 FR 28604, May 26, 1999; 67 FR 40438, June 12, 2002, 73 FR 4348, Jan. 24, 2008.

(u) 40 CFR 75.61; "Notifications;" 60 FR 26538, May 17, 1995; as amended at 61 FR 25582, May 22, 1996; 61 FR 59162, Nov. 22, 1996; 64 FR 28620, May 26, 1999; 67 FR 40442, 40443, June 12, 2002, 73 FR 4356, Jan. 24, 2008.

(v) 40 CFR 75.62; "Monitoring plan submittals;" 58 FR 3701, Jan. 11, 1993; as amended at 60 FR 26539, May 17, 1995; 64 FR 28621, May 26, 1999; 67 FR 40443, June 12, 2002, 73 FR 4356, Jan. 24, 2008.

(w) 40 CFR 75.63; "Initial certification or recertification application;" 64 FR 28621, May 26, 1999; as amended at 67 FR 40443, June 12, 2002, 73 FR 4357, Jan. 24, 2008.

(x) 40 CFR 75.64; "Quarterly reports;" 64 FR 28622, May 26, 1999; as amended at 67 FR 40444, June 12, 2002, 73 FR 4357, Jan. 24, 2008.

(y) 40 CFR 75.66; "Petitions to the administrator:" 58 FR 3701, Jan. 11, 1993; as amended at 60 FR 26540, 26569, May 17, 1995; 61 FR 59162, Nov. 20, 1996; 64 FR 28623, May 26, 1999; 67 FR 40444, June 12, 2002, 73 FR 4358, Jan. 24, 2008.

(z) 40 CFR 75.71; "Specific provisions for monitoring NOx and heat input for the purpose of calculating NOx mass emissions;" 63 FR 57508, Oct. 27, 1998, as amended at 64 FR 28624, May 26, 1999; 67 FR 40444, 40445, June 12, 2002; 67 FR 53505, Aug. 16, 2002, 73 FR 4358, Jan. 24, 2008.

(aa) 40 CFR 75.72; "Determination of NOx mass emissions;" 63 FR 57507, Oct. 27, 1998, as amended at 67 FR 40445, June 12, 2002, 73 FR 4358, Jan. 24, 2008.

(bb) 40 CFR 75.73; "Recordkeeping and reporting;" 64 FR 28624, May 26, 1999, as amended at 67 FR 40446, June 12, 2002, 73 FR 4359, Jan. 24, 2008.

(cc) 40 CFR 77.5; "Deduction of allowances to offset excess emissions of sulfur dioxide;" 70 FR 25337, May 12, 2005.

(dd) 40 CFR 96.115; "Delegation by CAIR designated representative and alternate CAIR designated representative;" 71 FR 25382, Apr. 28, 2006, as amended by 71 FR 74794, Dec. 13, 2006.

(ee) 40 CFR 97.115; "Delegation by CAIR designated representative and alternate CAIR designated representative;" 65 FR 2727, Jan. 18, 2000, unless otherwise noted. 71 FR 25396, 25422, and 25443, Apr. 28, 2006.

(ff) 40 CFR Part 70; "State Operating Permit Programs;" as published in the July 1, 2012 Code of Federal Regulations.

(gg) 40 CFR Part 71; "Federal Operating Permit Programs;" as published in the July 1, 2012 Code of Federal Regulations.

(hh) 40 CFR Part 72; "Permits Regulation;" as published in the July 1, 2012 Code of Federal Regulations.

(ii) 40 CFR Part 73; "Sulfur Dioxide Allowance System;" as published in the July 1, 2012 Code of Federal Regulations.

(jj) 40 CFR Part 73, Subpart D; "Allowance Transfers;" as published in the July 1, 2012 Code of Federal Regulations.

(kk) 40 CFR Part 74; "Sulfur Dioxide Opt-ins;" as published in the July 1, 2012 Code of Federal Regulations.

(ll) 40 CFR Part 75; "Continuous Emission Monitoring;" as published in the July 1, 2012 Code of Federal Regulations.

(mm) 40 CFR Part 75, Appendix A; "Specifications and Test Procedures;" 58 FR 3701, Jan. 11, 1993; as amended at 60 FR 26541, May 17, 1995; 61 FR 25582, May 22, 1996; 61 FR 59162, Nov. 20, 1996; 63 FR 57512, Oct. 27, 1998; 64 FR 28631, May 26, 1999; 64 FR 37582, July 12, 1999; 67 FR 40448, 40449, 40452, 40453, 40455, June 12, 2002; 67 FR 53505, Aug. 16, 2002; 70 FR 28690, May 18, 2005.

(nn) 40 CFR Part 75, Appendix B; "Quality Assurance and Quality Control Procedures;" 58 FR 3701, Jan. 11, 1993; as amended at 60 FR 26546, 26571, May 17, 1995; 61 FR 59165, Nov. 20, 1996; 64 FR 28644, May 26, 1999; 64 FR 37582, July 12, 1999; 67 FR 40456, 40457, June 12, 2002; 67 FR 53505, Aug. 16, 2002; 67 FR 57274, Sept. 9, 2002; 70 FR 28690, May 18, 2005.

(oo) 40 CFR Part 75, Appendix D; "Optional SO2 Emissions Data Protocol for Gas-Fired and Oil-Fired Units;" 58 FR 3701, Jan. 11, 1993, as amended at 60 FR 26548, 26551, May 17, 1995; 61 FR 25585, May 22, 1996; 61 FR 59166, Nov. 20, 1996; 63 FR 57513, Oct. 27, 1998; 64 FR 28652, May 26, 1999; 64 FR 37582, July 12, 1999; 67 FR 40460, 40472, June 12, 2002; 67 FR 53505, Aug. 16, 2002.

(pp) 40 CFR Part 75, Appendix E; "Optional NOx Emissions Estimation Protocol for Gas-Fired Peaking Units and Oil-Fired Peaking Units;" 58 FR 3701, Jan. 11, 1993, as amended at 60 FR 26551-26553, May 17, 1995; 64 FR 28665, May 26, 1999; 67 FR 40473, 40474, June 12, 2002; 67 FR 53505, Aug. 16, 2002

(qq) 40 CFR Part 75, Subpart D; "Missing Data Substitution Procedures;" 58 FR 3701, Jan. 11, 1993, as amended at 60 FR 26529, May 17, 1995; 61 FR 59160, Nov. 20, 1996; 61 FR 25582, May 22, 1996; 61 FR 59160, Nov. 20, 1996; 64 FR 28600, May 26, 1999; 67 FR 40433, June 12, 2002; 67 FR 53505, Aug. 16, 2002; 67 FR 57274, Sept. 9, 2002; 70 FR 28679, May 18, 2005.

(rr) 40 CFR Part 75, Subpart E; "Alternative Monitoring Systems;" 58 FR 3701, Jan. 11, 1993, as amended at 60 FR 26530, May 17, 1995; 60 FR 40296, Aug. 8, 1995; 64 28605, May 26, 1999; 67 FR 40440, June 12, 2002.

(ss) 40 CFR Part 75, Subpart F; "Recordkeeping Requirements;" 58 FR 3701, Jan. 11, 1993, as amended at 60 FR 26532, May 17, 1995; 61 FR 59161, Nov. 20, 1996; 64 FR 28605, May 26, 1999; 64 FR 37582, July 12, 1999; 67 FR 40440, June 12, 2002; 70 FR 28682, May 18, 2005.

(tt) 40 CFR Part 75, Subpart G; "Reporting Requirements;" 58 FR 3701, Jan. 11, 1993, as amended at 60 FR 17131, Apr. 4, 1995; 60 FR 26538, May 17, 1995; 61 FR 25582, May 22, 1996; 61 FR 59162, Nov. 20, 1996; 62 FR 55487, Oct. 24, 1997; 64 FR 28620, May 26, 1999; 67 FR 40442, June 12, 2002.

(uu) 40 CFR Part 75, Subpart H; "NOX Mass Emissions Provisions;" 63 FR 57507, Oct. 27, 1998, as amended at 64 FR 28624, May 26, 1999; 67 FR 40444, June 12, 2002; 67 FR 53505, Aug. 16, 2002.

(vv) 40 CFR Part 76; "Acid Rain Nitrogen Oxides Emission Reduction Program;" as published in the July 1, 2012 Code of Federal Regulations.

(ww) 40 CFR Part 77; "Excess Emissions;" as published in the July 1, 2012 Code of Federal Regulations.

(xx) 40 CFR Part 78; "Appeal Procedures For Acid Rain Program;" as published in the July 1, 2012 Code of Federal Regulations.

(yy) 42 USC 7401 to 7671q; "The Public Health and Welfare -Air Pollution Prevention and Control;" published January 3, 2005 in Supplement IV of the 2000 Edition of the United States Code.

(zz) Section 111 of the Clean Air Act; contained in 42 USC 7411;" Standards of Performance for New Stationary Sources;" published January 3, 2005 in Supplement IV of the 2000 Edition of the United States Code.

(aaa) Section 129 of the Clean Air Act; contained in 42 USC 7429; "Solid Waste Combustion;" published January 3, 2005 in Supplement IV of the 2000 Edition of the United States Code.

(bbb) Section 502(c) of the Clean Air Act; contained in 42 USC 7661;" Permit Programs;" published January 3, 2005 in Supplement IV of the 2000 Edition of the United States Code.

(ccc) Title IV of the Clean Air Act; contained in 42 USC 7651 to 7651o; "Acid Deposition Control;" published January 3, 2005 in Supplement IV of the 2000 Edition of the United States Code.

Effective: 11/14/2013

R.C. 119.032 review dates: 08/29/2013 and 11/14/2018

CERTIFIED ELECTRONICALLY
Certification

11/04/2013
Date

Promulgated Under: 119.03
Statutory Authority: 3704.03(E)
Rule Amplifies: 3704.03(A), 3704.03(E), 3704.03(V)
Prior Effective Dates: 09/27/07, 07/16/09

3745-109-02 **CAIR designated representative for CAIR NOx sources.**

[Comment: For dates of non-regulatory government publications, publications of recognized organizations and associations, federal rules, and federal statutory provisions referenced in this rule, see paragraph (H) of rule 3745-109-01 of the Administrative Code titled "Referenced materials."]

(A) Authorization and responsibilities of CAIR designated representative.

(1) Except as provided under paragraph (B) of this rule, each CAIR NOx source, including all CAIR NOx units at the source, shall have one and only one CAIR designated representative, with regard to all matters under the CAIR NOx annual trading program concerning the source or any CAIR NOx unit at the source.

(2) The CAIR designated representative of the CAIR NOx source shall be selected by an agreement binding on the owners and operators of the source and all CAIR NOx units at the source and shall act in accordance with the certification statement in paragraph (D)(1)(d)(iv) of this rule.

(3) Upon receipt by the administrator of a complete certificate of representation under paragraph (D) of this rule, the CAIR designated representative of the source shall represent and, by his or her representations, actions, inactions, or submissions, legally bind each owner and operator of the CAIR NOx source represented and each CAIR NOx unit at the source in all matters pertaining to the CAIR NOx annual trading program, notwithstanding any agreement between the CAIR designated representative and such owners and operators. The owners and operators shall be bound by any decision or order issued to the CAIR designated representative by the director, the administrator, or a court regarding the source or unit.

(4) No CAIR permit will be issued, no emissions data reports will be accepted, and no CAIR NOx allowance tracking system account will be established for a CAIR NOx unit at a source, until the administrator has received a complete certificate of representation under paragraph (D) of this rule for a CAIR designated representative of the source and the CAIR NOx units at the source.

(5) CAIR NOx annual trading program submissions.

(a) Each submission under the CAIR NOx annual trading program shall be submitted, signed, and certified by the CAIR designated representative for each CAIR NOx source on behalf of which the submission is made. Each such submission shall include the following certification statement by the CAIR designated representative: "I am authorized to make this submission on behalf of the owners and operators of the source or units for which the

submission is made. I certify under penalty of law that I have personally examined, and am familiar with, the statements and information submitted in this document and all its attachments. Based on my inquiry of those individuals with primary responsibility for obtaining the information, I certify that the statements and information are to the best of my knowledge and belief true, accurate, and complete. I am aware that there are significant penalties for submitting false statements and information or omitting required statements and information, including the possibility of fine or imprisonment."

(b) The director and the administrator shall accept or act on a submission made on behalf of owner or operators of a CAIR NOx source or a CAIR NOx unit only if the submission has been made, signed, and certified in accordance with paragraph (A)(5)(a) of this rule.

(B) Alternate CAIR designated representative.

(1) A certificate of representation under paragraph (D) of this rule may designate one and only one alternate CAIR designated representative, who may act on behalf of the CAIR designated representative. The agreement by which the alternate CAIR designated representative is selected shall include a procedure for authorizing the alternate CAIR designated representative to act in lieu of the CAIR designated representative.

(2) Upon receipt by the administrator of a complete certificate of representation under paragraph (D) of this rule, any representation, action, inaction, or submission by the alternate CAIR designated representative shall be deemed to be a representation, action, inaction, or submission by the CAIR designated representative.

(3) Except in paragraph (B) of this rule and paragraph (B) of rule 3745-109-01 of the Administrative Code, paragraphs (A)(1), (A)(4), (C), (D), and (F) of this rule, paragraph (A) of rule 3745-109-05 of the Administrative Code, and paragraph (C) of rule 3745-109-08 of the Administrative Code, whenever the term "CAIR designated representative" is used in rules 3745-109-01 to 3745-109-08 of the Administrative Code, the term shall be construed to include the CAIR designated representative or any alternate CAIR designated representative.

(C) Changing CAIR designated representative and alternate CAIR designated representative; changes in owners and operators.

(1) Changing CAIR designated representative. The CAIR designated representative may be changed at any time upon receipt by the administrator of a superseding complete certificate of representation under paragraph (D) of this rule. Notwithstanding any such change, all representations, actions, inactions, and submissions by the previous CAIR designated representative before the time and

date when the administrator receives the superseding certificate of representation shall be binding on the new CAIR designated representative and the owners and operators of the CAIR NOx source and the CAIR NOx units at the source.

(2) Changing alternate CAIR designated representative. The alternate CAIR designated representative may be changed at any time upon receipt by the administrator of a superseding complete certificate of representation under paragraph (D) of this rule. Notwithstanding any such change, all representations, actions, inactions, and submissions by the previous alternate CAIR designated representative before the time and date when the administrator receives the superseding certificate of representation shall be binding on the new alternate CAIR designated representative and the owners and operators of the CAIR NOx source and the CAIR NOx units at the source.

(3) Changes in owners and operators.

(a) In the event an owner or operator of a CAIR NOx source or a CAIR NOx unit is not included in the list of owners and operators in the certificate of representation under paragraph (D) of this rule, such owner or operator shall be deemed to be subject to and bound by the certificate of representation, the representations, actions, inactions, and submissions of the CAIR designated representative and any alternate CAIR designated representative of the source or unit, and the decisions and orders of the permitting authority, the administrator, or a court, as if the owner or operator were included in such list.

(b) Within thirty days following any change in the owners and operators of a CAIR NOx source or a CAIR NOx unit, including the addition of a new owner or operator, the CAIR designated representative or any alternate CAIR designated representative shall submit a revision to the certificate of representation under paragraph (D) of this rule amending the list of owners and operators to include the change.

(D) Certificate of representation.

(1) A complete certificate of representation for a CAIR designated representative or an alternate CAIR designated representative shall include the following elements in a format prescribed by the administrator:

(a) Identification of the CAIR NOx source, and each CAIR NOx unit at the source, for which the certificate of representation is submitted, including identification and nameplate capacity of each generator served by each such unit.

(b) The name, address, e-mail address (if any), telephone number, and facsimile transmission number (if any) of the CAIR designated representative and any alternate CAIR designated representative.

(c) A list of the owners and operators of the CAIR NOx source and of each CAIR NOx unit at the source;

(d) The following certification statements by the CAIR designated representative and any alternate CAIR designated representative:

(i) "I certify that I was selected as the CAIR designated representative or alternate CAIR designated representative, as applicable, by an agreement binding on the owners and operators of the source and each CAIR NOx unit at the source."

(ii) "I certify that I have all the necessary authority to carry out my duties and responsibilities under the CAIR NOx Annual trading program on behalf of the owners and operators of the source and of each CAIR NOx unit at the source and that each such owner and operator shall be fully bound by my representations, actions, inactions, or submissions."

(iii) "I certify that the owners and operators of the source and of each CAIR NOx unit at the source shall be bound by any order issued to me by the administrator, the director, or a court regarding the source or unit."

(iv) Where there are multiple holders of a legal or equitable title to, or a leasehold interest in, a CAIR NOx unit, or where a utility or industrial customer purchases power from a CAIR NOx unit under a life-of-the-unit, firm power contractual arrangement, "I certify that: I have given a written notice of my selection as the 'CAIR designated representative' or 'alternate CAIR designated representative', as applicable, and of the agreement by which I was selected to each owner and operator of the source and of each CAIR NOx unit at the source; and CAIR NOx allowances and proceeds of transactions involving CAIR NOx allowances shall be deemed to be held or distributed in proportion to each holder's legal, equitable, leasehold, or contractual reservation or entitlement, except that, if such multiple holders have expressly provided for a different distribution of CAIR NOx allowances by contract, CAIR NOx allowances and proceeds of transactions involving CAIR NOx allowances shall be deemed to be held or distributed in accordance with the contract."

(e) The signature of the CAIR designated representative and any alternate CAIR designated representative and the dates signed.

(2) Unless otherwise required by the director or the administrator, documents of agreement referred to in the certificate of representation shall not be submitted to the director or the administrator. Neither the director nor the administrator shall be under any obligation to review or evaluate the sufficiency of such documents, if submitted.

(E) Objections concerning CAIR designated representative.

(1) Once a complete certificate of representation under paragraph (D) of this rule has been submitted and received, the director and the administrator shall rely on the certificate of representation unless and until a superseding complete certificate of representation under paragraph (D) of this rule is received by the administrator.

(2) Except as provided in paragraph (C)(1) or (C)(2) of this rule, no objection or other communication submitted to the director or the administrator concerning the authorization, or any representation, action, inaction, or submission, of the CAIR designated representative shall affect any representation, action, inaction, or submission of the CAIR designated representative or the finality of any decision or order by the director or the administrator under the CAIR NOx annual trading program.

(3) Neither the permitting authority nor the administrator will adjudicate any private legal dispute concerning the authorization or any representation, action, inaction, or submission of any CAIR designated representative, including private legal disputes concerning the proceeds of CAIR NOx allowance transfers.

(F) Delegation by CAIR designated representative and alternate CAIR designated representative.

(1) A CAIR designated representative may delegate, to one or more natural persons, his or her authority to make an electronic submission to the administrator provided for or required under this rule.

(2) An alternate CAIR designated representative may delegate, to one or more natural persons, his or her authority to make an electronic submission to the administrator provided for or required under this rule.

(3) In order to delegate authority to make an electronic submission to the administrator in accordance with paragraph (F)(1) or (F)(2) of this rule, the CAIR designated representative or alternate CAIR designated representative, as appropriate, must submit to the administrator a notice of delegation, in a format prescribed by the administrator, that includes the following elements:

(a) The name, address, e-mail address, telephone number, and facsimile transmission number (if any) of such CAIR designated representative or alternate CAIR designated representative.

(b) The name, address, e-mail address, telephone number, and facsimile transmission number (if any) of each such natural person (referred to as an "agent").

(c) For each such natural person, a list of the type or types of electronic submissions under paragraph (F)(1) or (F)(2) of this rule for which authority is delegated to him or her.

(d) The following certification statements by such CAIR designated representative or alternate CAIR designated representative:

(i) "I agree that any electronic submission to the administrator that is by an agent identified in this notice of delegation and of a type listed for such agent in this notice of delegation and that is made when I am a CAIR designated representative or alternate CAIR designated representative, as appropriate, and before this notice of delegation is superseded by another notice of delegation under 40 CFR 96.115(d) shall be deemed to be an electronic submission by me."

(ii) "Until this notice of delegation is superseded by another notice of delegation under 40 CFR 96.115(d), I agree to maintain an e-mail account and to notify the administrator immediately of any change in my e-mail address unless all delegation of authority by me under 40 CFR 96.115 is terminated."

(4) A notice of delegation submitted under paragraph (F)(3) of this rule shall be effective, with regard to the CAIR designated representative or alternate CAIR designated representative identified in such notice, upon receipt of such notice by the administrator and until receipt by the administrator of a superseding notice of delegation submitted by such CAIR designated representative or alternate CAIR designated representative, as appropriate. The superseding notice of delegation may replace any previously identified agent, add a new agent, or eliminate entirely any delegation of authority.

(5) Any electronic submission covered by the certification in paragraph (3)(d)(i) of this rule and made in accordance with a notice of delegation effective under paragraph (F)(4) of this rule shall be deemed to be an electronic submission by the CAIR designated representative or alternate CAIR designated representative submitting such notice of delegation.

Effective: 11/14/2013

R.C. 119.032 review dates: 08/29/2013 and 11/14/2018

CERTIFIED ELECTRONICALLY
Certification

11/04/2013
Date

Promulgated Under: 119.03
Statutory Authority: 3704.03(E)
Rule Amplifies: 3704.03(A), 3704.03(E), 3704.03(V)
Prior Effective Dates: 09/27/07

3745-109-03 **CAIR NOx source permits.**

(A) General CAIR annual trading program permit requirements.

(1) For each CAIR NOx source required to have a Title V operating permit or required, under rule 3745-109-08 of the Administrative Code, to have a Title V operating permit or other federally enforceable permit, such permit shall include a CAIR permit administered by the director for the Title V operating permit or the federally enforceable permit as applicable. The CAIR portion of the Title V permit or other federally enforceable permit as applicable shall be administered in accordance with the director's Title V operating permits regulations or the director's regulations for other federally enforceable permits as applicable, except as provided otherwise by paragraph (D) of rule 3745-109-01 of the Administrative Code, this rule and rule 3745-109-08 of the Administrative Code.

(2) Each CAIR permit shall contain, with regard to the CAIR NOx source and the CAIR NOx units at the source covered by the CAIR permit, all applicable CAIR NOx annual trading program, CAIR NOx ozone season trading program, and CAIR SO2 trading program requirements and shall be a complete and separable portion of the Title V operating permit or other federally enforceable permit under paragraph (A)(1) of this rule.

(B) Submission of CAIR permit applications.

(1) Duty to apply. The CAIR designated representative of any CAIR NOx source required to have a Title V operating permit shall submit to the director a complete CAIR permit application under paragraph (C) of this rule for the source covering each CAIR NOx unit at the source at least twelve months (or such lesser time provided by the director) before the later of January 1, 2009 or the date on which the CAIR NOx unit commences commercial operation, except as provided in paragraph (D)(1) of rule 3745-109-08 of the Administrative Code.

(2) Duty to reapply. For a CAIR NOx source required to have a Title V operating permit, the CAIR designated representative shall submit a complete CAIR permit application under paragraph (C) of this rule for the source covering each CAIR NOx unit at the source to renew the CAIR permit in accordance with the director's Title V operating permits regulations addressing permit renewal, except as provided in paragraph (D)(2) of rule 3745-109-08 of the Administrative Code.

(C) Information requirements for CAIR permit applications. A complete CAIR permit application shall include the following elements concerning the CAIR NOx source for which the application is submitted, in a format prescribed by the director:

(1) Identification of the CAIR NOx source.

(2) Identification of each CAIR NOx unit at the CAIR NOx source.

(3) The standard requirements under paragraph (E) of rule 3745-109-01 of the Administrative Code.

(D) CAIR permit contents and term.

(1) Each CAIR permit shall contain, in a format prescribed by the director, all elements required for a complete CAIR permit application under paragraph (C) of this rule.

(2) Each CAIR permit is deemed to incorporate automatically the definitions of terms under paragraph (B) of rule 3745-109-01 of the Administrative Code and, upon recordation by the administrator under rule 3745-109-04, 3745-109-05, 3745-109-06 or 3745-109-08 of the Administrative Code, every allocation, transfer, or deduction of a CAIR NOx allowance to or from the compliance account of the CAIR NOx source covered by the permit.

(3) The term of the CAIR permit shall be set by the director, as necessary to facilitate coordination of the renewal of the CAIR permit with issuance, revision, or renewal of the CAIR NOx source's Title V operating permit or other federally enforceable permit as applicable.

(E) CAIR permit revisions.

Except as provided in paragraph (D)(2) of this rule, the director shall revise the CAIR permit, as necessary, in accordance with the director's Title V operating permits regulations or the director's regulations for other federally enforceable permits as applicable addressing permit revisions.

Effective: 11/14/2013

R.C. 119.032 review dates: 08/29/2013 and 11/14/2018

CERTIFIED ELECTRONICALLY
Certification

11/04/2013
Date

Promulgated Under: 119.03
Statutory Authority: 3704.03(E)
Rule Amplifies: 3704.03(A), 3704.03(E), 3704.03(V)
Prior Effective Dates: 09/27/07

3745-109-04 **CAIR NOx allowance allocations.**

[Comment: For dates of non-regulatory government publications, publications of recognized organizations and associations, federal rules, and federal statutory provisions referenced in this rule, see paragraph (H) of rule 3745-109-01 of the Administrative Code titled "Referenced materials."]

(A) State trading budget.

The state trading budget in Ohio for the CAIR NOx annual trading program for 2009 through 2014 is one hundred eight thousand six hundred sixty-seven tons and in 2015 and thereafter is ninety thousand five hundred fifty-six tons.

(B) Timing requirements for CAIR NOx allowance allocations.

(1) No later than September 30, 2007, the director shall submit to the administrator the CAIR NOx allowance allocations, in a format prescribed by the administrator and in accordance with paragraphs (C)(1) and (C)(2) of this rule, for the control periods in 2009 through 2014.

(2) Existing units.

By October 31, 2009 and by October thirty-first every six years thereafter, the director shall submit to the administrator the CAIR NOx allowance allocations, in a format prescribed by the administrator and in accordance with paragraphs (C)(1) and (C)(2) of this rule, for the control periods six years, seven years, eight years, nine years, ten years and eleven years after the year of the applicable deadline for submission under this paragraph.

(3) New units.

By October 31, 2009 and by October thirty-first of each year thereafter, the director shall submit to the administrator the CAIR NOx allowance allocations, in a format prescribed by the administrator and in accordance with paragraphs (C)(1), (C)(3) and (C)(4) of this rule, for the control period in the year of the applicable deadline for submission under this paragraph.

(C) CAIR NOx allowance allocations.

(1) Existing units.

(a) The baseline heat input (in mmBtu) used with respect to CAIR NOx allowance allocations under paragraph (C)(2) of this rule for each CAIR NOx unit shall be the following:

(i) For units commencing operation before January 1, 2001 the average of the three highest amounts of the unit's adjusted control period heat input for 1998 through 2005, with the adjusted control period heat input for each year calculated as follows:

(a) If the unit is coal-fired during the year, the unit's control period heat input for such year is multiplied by one hundred per cent.

(b) If the unit is oil-fired during the year, the unit's control period heat input for such year is multiplied by sixty per cent.

(c) If the unit is not subject to paragraph (C)(1)(a)(i)(a) or (C)(1)(a)(i)(b) of this rule, the unit's control period heat input for such year is multiplied by forty per cent.

(ii) For units commencing operation on or after January 1, 2001 and operating each calendar year during a period of three or more consecutive calendar years, the average of the three highest amounts of the unit's total converted control period heat input.

(b) Adjusted heat inputs.

(i) A unit's control period heat input, and a unit's status as coal-fired or oil-fired, for a calendar year under paragraph (C)(1)(a)(i) of this rule, and a unit's total tons of NOx emissions during a calendar year under paragraph (C)(3)(c) of this rule, shall be determined in accordance with 40 CFR Part 75, to the extent the unit was otherwise subject to the requirements of 40 CFR Part 75 for the year, or shall be based on the best available data reported to the director for the unit, to the extent the unit was not otherwise subject to the requirements of 40 CFR Part 75 for the year.

(ii) A unit's converted control period heat input for a calendar year specified under paragraph (C)(1)(a)(ii) of this rule equals one of the following:

(a) Except as provided in paragraph (C)(1)(b)(ii)(b) or (C)(1)(b)(ii)(c) of this rule, the control period gross electrical output of the generator or generators served by the unit multiplied by seven thousand nine hundred Btu per kWh, if the unit is coal-fired for the year, or six thousand six hundred seventy-five Btu per kWh, if the unit is not coal-fired for the year, and divided by one million Btu per mmBtu, provided that if a generator is served by two or more units, then the gross electrical output of the generator shall be attributed to each unit in proportion to the unit's share of the total control period heat input of such units for the year.

(b) For a unit that is a boiler and has equipment used to produce electricity and useful thermal energy for industrial, commercial, heating, or cooling purposes through the sequential use of energy, the total heat energy of the steam produced by the boiler during the control period, divided by 0.8 and by one million Btu per mmBtu.

(c) For a unit that is a combustion turbine and has equipment used to produce electricity and useful thermal energy for industrial, commercial, heating, or cooling purposes through the sequential use of energy, the control period gross electrical output of the enclosed device comprising the compressor, combustion, and turbine multiplied by three thousand four hundred thirteen Btu per kWh, plus the total heat energy of the steam produced by any associated heat recovery steam generator during the control period divided by 0.8, and with the sum divided by one million Btu per mmBtu.

(2) Adjusted allocations.

(a) For each control period in 2009 and thereafter, the director shall allocate to all CAIR NOx units in the state that have a baseline heat input (as determined under paragraph (C)(1) of this rule) a total amount of CAIR NOx allowances equal to ninety-five per cent for a control period during 2009 through 2014, and ninety-seven per cent for a control period during 2015 and thereafter, of the tons of NOx emissions in the state trading budget under paragraph (A) of this rule (except as provided in paragraph (C)(4) of this rule).

(b) The director shall allocate CAIR NOx allowances to each CAIR NOx unit under paragraph (C)(2)(a) of this rule in an amount determined by multiplying the total amount of CAIR NOx allowances allocated under paragraph (C)(2)(a) of this rule by the ratio of the baseline heat input of such CAIR NOx unit to the total amount of baseline heat input of all such CAIR NOx units in the state and rounding to the nearest whole allowance as appropriate.

(3) For each control period in 2009 and thereafter, the director shall allocate CAIR NOx allowances to CAIR NOx units in the state that are not allocated CAIR NOx allowances under paragraph (C)(2)(a) of this rule because the units do not yet have a baseline heat input under paragraph (C)(1)(a) of this rule or because the units have a baseline heat input but all CAIR NOx allowances available under paragraph (C)(2)(a) of this rule for the control period are already allocated, in accordance with the following procedures:

(a) The director shall establish a separate new unit set-aside for each control period. Each new unit set-aside shall be allocated CAIR NOx allowances

equal to five per cent for a control period in 2009 through 2014, and three per cent for a control period in 2015 and thereafter, of the amount of tons of NOx emissions in the state trading budget under paragraph (A) of this rule.

(b) The CAIR designated representative of such a CAIR NOx unit may submit to the director a request, in a format specified by the director, to be allocated CAIR NOx allowances, starting with the later of the control period in 2009 or the first control period after the control period in which the CAIR NOx unit commences commercial operation and until the first control period for which the unit is allocated CAIR NOx allowances under paragraph (C)(2) of this rule. A separate CAIR NOx allowance allocation request for each control period for which CAIR NOx allowances are sought must be submitted on or before May first of such control period and after the date on which the CAIR NOx unit commences commercial operation.

(c) In a CAIR NOx allowance allocation request under paragraph (C)(3)(b) of this rule, the CAIR designated representative may request for a control period CAIR NOx allowances in an amount not exceeding the CAIR NOx unit's total tons of NOx emissions during the calendar year immediately before such control period.

(d) The director shall review each CAIR NOx allowance allocation request under paragraph (C)(3)(b) of this rule and shall allocate CAIR NOx allowances for each control period pursuant to such request as follows:

(i) The director shall accept an allowance allocation request only if the request meets, or is adjusted by the director as necessary to meet, the requirements of paragraphs (C)(3)(b) and (C)(3)(c) of this rule.

(ii) For each control period on or after May first, the director shall determine the sum of the CAIR NOx allowances requested (as adjusted under paragraph (C)(3)(d)(i) of this rule) in all allowance allocation requests accepted under paragraph (C)(3)(d)(i) of this rule for the control period.

(iii) If the amount of CAIR NOx allowances in the new unit set-aside for the control period is greater than or equal to the sum under paragraph (C)(3)(d)(ii) of this rule, then the director shall allocate the amount of CAIR NOx allowances requested (as adjusted under paragraph (C)(3)(d)(i) of this rule) to each CAIR NOx unit covered by an allowance allocation request accepted under paragraph (C)(3)(d)(i) of this rule.

(iv) If the amount of CAIR NOx allowances in the new unit set-aside for the control period is less than the sum under paragraph (C)(3)(d)(ii) of this rule, then the director shall allocate to each CAIR NOx unit covered by

an allowance allocation request accepted under paragraph (C)(3)(d)(i) of this rule the amount of the CAIR NOx allowances requested (as adjusted under paragraph (C)(3)(d)(i) of this rule), multiplied by the number of CAIR NOx allowances in the new unit set-aside for the control period, divided by the sum determined under paragraph (C)(3)(d)(ii) of this rule, and rounded to the nearest whole allowance as appropriate.

(v) The director shall notify each CAIR designated representative that submitted an allowance allocation request of the amount of CAIR NOx allowances (if any) allocated for the control period to the CAIR NOx unit covered by the request.

[Comment: As stated in paragraph (C)(3) of this rule, units commencing operation on or after January 1, 2001 and lacking a baseline heat input because of insufficient heat input data availability, as stated in paragraph (C)(1)(a)(ii) of this rule, shall be allocated allowances from the new unit set-aside. The unit will continue to be allocated allowances from the new unit set-aside, even if the unit has sufficient heat input data for determination of a baseline until such time as the director has determined new allowance allocations from the state trading budget under paragraph (A) of this rule, for all units in the state with a baseline heat input based on the timing requirements in paragraph (B) of this rule.]

(4) If, after completion of the procedures under paragraph (C)(3)(d) of this rule for a control period, any unallocated CAIR NOx allowances remain in the new unit set-aside for the control period, the director shall allocate to each CAIR NOx unit that was allocated CAIR NOx allowances under paragraph (C)(2) of this rule an amount of CAIR NOx allowances equal to the total amount of such remaining unallocated CAIR NOx allowances, multiplied by the unit's allocation under paragraph (C)(2) of this rule, divided by ninety-five per cent for a control period during 2009 through 2014, and ninety-seven per cent for a control period during 2015 and thereafter, of the amount of tons of NOx emissions in the state trading budget under paragraph (A) of this rule, and rounded to the nearest whole allowance as appropriate.

(D) Early reduction credit.

(1) The director will create a compliance supplemental pool (CSP) of twenty-five thousand thirty-seven early reduction credits. Each CAIR NOx unit for which the designated representative requests any early reduction credit under this rule shall monitor and report NOx emissions in accordance with 40 CFR Part 75 in the 2005 control period and for each control period for which any early reduction credit is requested. The unit's percent monitor data availability shall be not less than ninety per cent during the 2005 control period, and the unit shall

be in compliance with any applicable state or federal NOx emission control requirements during 2005 through 2008.

(2) The NOx emission rate and heat input under paragraphs (D)(3) and (D)(4) of this rule shall be determined in accordance with 40 CFR Part 75.

(3) Each CAIR NOx unit for which the designated representative requests early reduction credit under paragraph (D)(4) of this rule shall do the following:

(a) Reduce its NOx emission rate for each control period for which early reduction credit is requested to less than the unit's NOx emission rate in the 2005 control period.

(b) Reduce its NOx emission rate for each control period below any applicable state implementation plan limitation or the applicable NOx emission rate contained in any permit issued to the unit. Early reduction credits shall not be earned if the unit is required to achieve NOx emission reductions that are necessary to comply with any state or federal emissions limitation applicable during each control period.

(c) Be an existing coal-fired unit in operation during the 2007 or 2008 control periods and will be required to comply with CAIR annual NOx emission limitations beginning January 1, 2009.

(4) A CAIR designated representative, for one or more CAIR NOx units that meet paragraphs (D)(1) to (D)(3) of this rule, is only eligible for the units' collective proportional share of the CSP, except as specified in paragraph (D)(6). The CAIR designated representative may submit to the director a request for early reduction credit based on NOx emission rate reductions for one or more CAIR NOx units in either or both of the control periods in 2007 and 2008.

(a) The collective proportional share of the CSP for a CAIR designated representative shall be equal to the product twenty-five thousand thirty-seven times the percentage calculated by dividing the sum of the baseline heat input for all CAIR NOx units represented by the designated representative by the sum of the baseline heat input for all CAIR NOx units subject to this rule.

(b) By November 26, 2007, the director shall calculate and publish the collective proportional share of the CSP for each CAIR designated representative eligible for CAIR early reduction credits. The director will also make available the data used to calculate the collective proportional shares of the CSP.

(c) The CAIR designated representative may request early reduction credits for NOx reductions made at one or more CAIR NOx units in the 2007 and/or

2008 control periods in an amount equal to the following: the unit's heat input for such control period multiplied by the difference between the unit's NOx emission rate (in pounds per mmBtu) during the 2005 control period and the NOx emission rate (in pounds per mmBtu) for each control period for which early reduction credits are requested, divided by two thousand pounds per ton and rounded to the nearest whole number of tons as appropriate. The total number of early reduction credits requested by a designated representative may exceed that representative's collective proportional share, and serve as a basis for additional CAIR NOx allocations from the CSP pursuant to paragraph (D)(6) of this rule.

(d) Requests for early reduction credits for reductions made in 2007 or 2008 shall be submitted, in a format specified by the director, by February 1, 2009.

(5) The director shall allocate CAIR NOx allowances from the CSP to the designated representative for CAIR NOx units meeting paragraphs (D)(1) to (D)(3) of this rule and for which early reduction credit requests meeting paragraph (D)(4)(c) of this rule were submitted, up to the collective proportional share of the CSP available to the CAIR designated representative as defined in paragraphs (D)(4)(a) and (D)(4)(b) of this rule.

(6) If the total number of early reduction credits allocated per paragraph (D)(5) of this rule is less than twenty-five thousand thirty-seven, the director shall allocate the remaining available NOx allowances to those CAIR designated representatives who submitted early reduction credit requests for one or more CAIR NOx units that exceeded his or her collective proportional share. The director shall allocate the remaining available NOx allowances from the CSP to each CAIR NOx unit that meets the requirements of this paragraph according to the following formula rounded to the nearest whole number of CAIR NOx allowances as appropriate:

[Twenty-five thousand thirty seven minus the CSP NOx allowances allocated under paragraph (D)(5) of this rule] multiplied by the [number of early reduction credits requested for a CAIR NOx unit under paragraph (D)(4)(c) of this rule minus the number of early reduction credits awarded to a CAIR NOx unit under paragraph (D)(5) of this rule] divided by the [(total number of early reduction credits requested for all CAIR NOx units under paragraph (D)(4)(c) minus the total number of early reduction credits awarded to all CAIR NOx units under paragraph (D)(5)]

(7) A CAIR NOx unit's total early reduction credits allocated shall equal the sum of the early reduction credits determined under paragraphs (D)(5) and (D)(6) of this rule.

(8) The director shall notify each CAIR authorized account representative who requested early reduction credits according to paragraph (D)(4) of this rule of the number of early reduction credit the administrator will record as CAIR NOx allowances for each CAIR NOx unit that made early reductions during the control periods in 2007 and 2008 by June 1, 2009, or at such time that sufficient 2008 unit's emissions data has been available by the administrator for the determination of the early reduction credits.

(9) The director shall submit to the administrator the CAIR NOx allowance allocations determined in accordance with paragraphs (D)(5) and (D)(6) of this rule by November 30, 2009, or at such time based on the emissions data availability as described in paragraph (D)(8) of this rule.

(10) The administrator will record the submitted allocations in paragraph (D)(9) of this rule by January 1, 2010.

(11) CAIR NOx allowances available for reductions made in the 2007 and 2008 control periods and not allocated or recorded by the director in accordance with paragraphs (D)(5) and (D)(6) of this rule shall be retired.

Effective: 11/14/2013

R.C. 119.032 review dates: 08/29/2013 and 11/14/2018

CERTIFIED ELECTRONICALLY
Certification

11/04/2013
Date

Promulgated Under: 119.03
Statutory Authority: 3704.03(E)
Rule Amplifies: 3704.03(A), 3704.03(E), 3704.03(V)
Prior Effective Dates: 09/27/07, 07/16/09

3745-109-05 **CAIR NOx allowance tracking system.**

[Comment: For dates of non-regulatory government publications, publications of recognized organizations and associations, federal rules, and federal statutory provisions referenced in this rule, see paragraph (H) of rule 3745-109-01 of the Administrative Code titled "Referenced materials."]

(A) Establishment of accounts.

(1) Compliance accounts. Except as provided in paragraph (E)(5) of rule 3745-109-08 of the Administrative Code, upon receipt of a complete certificate of representation under paragraph (D) of rule 3745-109-02 of the Administrative Code, the administrator shall establish a compliance account for the CAIR NOx source for which the certificate of representation was submitted unless the source already has a compliance account.

(2) General accounts.

(a) Application for general account.

(i) Any person may apply to open a general account for the purpose of holding and transferring CAIR NOx allowances. An application for a general account may designate one and only one CAIR authorized account representative and one and only one alternate CAIR authorized account representative who may act on behalf of the CAIR authorized account representative. The agreement by which the alternate CAIR authorized account representative is selected shall include a procedure for authorizing the alternate CAIR authorized account representative to act in lieu of the CAIR authorized account representative.

(ii) A complete application for a general account shall be submitted to the administrator and shall include the following elements in a format prescribed by the administrator:

(a) Name, mailing address, e-mail address (if any), telephone number, and facsimile transmission number (if any) of the CAIR authorized account representative and any alternate CAIR authorized account representative.

(b) Organization name and type of organization, if applicable.

(c) A list of all persons subject to a binding agreement for the CAIR authorized account representative and any alternate CAIR authorized account representative to represent their ownership interest with respect to the allowances held in the general account.

(d) The following certification statement by the CAIR authorized account representative and any alternate CAIR authorized account representative: "I certify that I was selected as the CAIR authorized account representative or the alternate CAIR authorized account representative, as applicable, by an agreement that is binding on all persons who have an ownership interest with respect to allowances held in the general account. I certify that I have all the necessary authority to carry out my duties and responsibilities under the CAIR NOx annual trading program on behalf of such persons and that each such person shall be fully bound by my representations, actions, inactions, or submissions and by any order or decision issued to me by the administrator or a court regarding the general account."

(e) The signature of the CAIR authorized account representative and any alternate CAIR authorized account representative and the dates signed.

(iii) Unless otherwise required by the director or the administrator, documents of agreement referred to in the application for a general account shall not be submitted to the director or the administrator. Neither the director nor the administrator shall be under any obligation to review or evaluate the sufficiency of such documents, if submitted.

(b) Authorization of CAIR authorized account representative and alternate CAIR authorized account representative.

(i) Upon receipt by the administrator of a complete application for a general account under paragraph (A)(2)(a) of this rule:

(a) The administrator shall establish a general account for the person or persons for whom the application is submitted.

(b) The CAIR authorized account representative and any alternate CAIR authorized account representative for the general account shall represent and, by his or her representations, actions, inactions, or submissions, legally bind each person who has an ownership interest with respect to CAIR NOx allowances held in the general account in all matters pertaining to the CAIR NOx annual trading program, notwithstanding any agreement between the CAIR authorized account representative or any alternate CAIR authorized account representative and such person. Any such person shall be bound by any order or decision issued to the CAIR authorized account representative or any alternate CAIR

authorized account representative by the administrator or a court regarding the general account.

(c) Any representation, action, inaction, or submission by any alternate CAIR authorized account representative shall be deemed to be a representation, action, inaction, or submission by the CAIR authorized account representative.

(ii) Each submission concerning the general account shall be submitted, signed, and certified by the CAIR authorized account representative or any alternate CAIR authorized account representative for the persons having an ownership interest with respect to CAIR NOx allowances held in the general account. Each such submission shall include the following certification statement by the CAIR authorized account representative or any alternate CAIR authorized account representative: "I am authorized to make this submission on behalf of the persons having an ownership interest with respect to the CAIR NOx allowances held in the general account. I certify under penalty of law that I have personally examined, and am familiar with, the statements and information submitted in this document and all its attachments. Based on my inquiry of those individuals with primary responsibility for obtaining the information, I certify that the statements and information are to the best of my knowledge and belief true, accurate, and complete. I am aware that there are significant penalties for submitting false statements and information or omitting required statements and information, including the possibility of fine or imprisonment."

(iii) The administrator shall accept or act on a submission concerning the general account only if the submission has been made, signed, and certified in accordance with paragraph (A)(2)(b)(ii) of this rule.

(c) Changing CAIR authorized account representative and alternate CAIR authorized account representative; changes in persons with ownership interest.

(i) The CAIR authorized account representative for a general account may be changed at any time upon receipt by the administrator of a superseding complete application for a general account under paragraph (A)(2)(a) of this rule. Notwithstanding any such change, all representations, actions, inactions, and submissions by the previous CAIR authorized account representative before the time and date when the administrator receives the superseding application for a general account shall be binding on the new CAIR authorized account representative and the persons with an ownership interest with respect to the CAIR NOx allowances in the general account.

(ii) The alternate CAIR authorized account representative for a general account may be changed at any time upon receipt by the administrator of a superseding complete application for a general account under paragraph (A)(2)(a) of this rule. Notwithstanding any such change, all representations, actions, inactions, and submissions by the previous alternate CAIR authorized account representative before the time and date when the administrator receives the superseding application for a general account shall be binding on the new alternate CAIR authorized account representative and the persons with an ownership interest with respect to the CAIR NOx allowances in the general account.

(iii) Ownership changes.

(a) In the event a person having an ownership interest with respect to CAIR NOx allowances in the general account is not included in the list of such persons in the application for a general account, such person shall be deemed to be subject to and bound by the application for a general account, the representation, actions, inactions, and submissions of the CAIR authorized account representative and any alternate CAIR authorized account representative of the account, and the decisions and orders of the administrator or a court, as if the person were included in such list.

(b) Within thirty days following any change in the persons having an ownership interest with respect to CAIR NOx allowances in the general account, including the addition of a new person, the CAIR authorized account representative or any alternate CAIR authorized account representative shall submit a revision to the application for a general account amending the list of persons having an ownership interest with respect to the CAIR NOx allowances in the general account to include the change.

(d) Objections concerning CAIR authorized account representative and alternate CAIR authorized account representative.

(i) Once a complete application for a general account under paragraph (A)(2)(a) of this rule has been submitted and received, the administrator shall rely on the application unless and until a superseding complete application for a general account under paragraph (A)(2)(a) of this rule is received by the administrator.

(ii) Except as provided in paragraph (A)(2)(c)(i) or (A)(2)(c)(ii) of this rule, no objection or other communication submitted to the administrator concerning the authorization, or any representation, action, inaction, or submission of the CAIR authorized account representative or any alternate CAIR authorized account representative for a general account

shall affect any representation, action, inaction, or submission of the CAIR authorized account representative or any alternate CAIR authorized account representative or the finality of any decision or order by the administrator under the CAIR NOx annual trading program.

(iii) The administrator will not adjudicate any private legal dispute concerning the authorization or any representation, action, inaction, or submission of the CAIR authorized account representative or any alternate CAIR authorized account representative for a general account, including private legal disputes concerning the proceeds of CAIR NOx allowance transfers.

(e) Delegation by CAIR authorized account representative and alternate CAIR authorized account representative.

(i) A CAIR authorized account representative may delegate, to one or more natural persons, his or her authority to make an electronic submission to the administrator provided for or required under rules 3745-109-05 and 3745-109-06 of the Administrative Code.

(ii) An alternate CAIR authorized account representative may delegate, to one or more natural persons, his or her authority to make an electronic submission to the administrator provided for or required under rules 3745-109-05 and 3745-109-06 of the Administrative Code.

(iii) In order to delegate authority to make an electronic submission to the administrator in accordance with paragraph (A)(2)(e)(i) or (A)(2)(e)(ii) of this rule, the CAIR authorized account representative or alternate CAIR authorized account representative, as appropriate, must submit to the administrator a notice of delegation, in a format prescribed by the administrator, that includes the following elements:

(a) The name, address, e-mail address, telephone number, and facsimile transmission number (if any) of such CAIR authorized account representative or alternate CAIR authorized account representative.

(b) The name, address, e-mail address, telephone number, and facsimile transmission number (if any) of each such natural person (referred to as an "agent").

(c) For each such natural person, a list of the type or types of electronic submissions under paragraph (A)(2)(e)(i) or (A)(2)(e)(ii) of this rule for which authority is delegated to him or her.

(d) The following certification statement by such CAIR authorized account representative or alternate CAIR authorized account representative: "I agree that any electronic submission to the administrator that is by an agent identified in this notice of delegation and of a type listed for such agent in this notice of delegation and that is made when I am a CAIR authorized account representative or alternate CAIR authorized representative, as appropriate, and before this notice of delegation is superseded by another notice of delegation under paragraph (A)(2)(e)(iv) of rule 3745-109-05 of the Administrative Code shall be deemed to be an electronic submission by me.".

(e) The following certification statement by such CAIR authorized account representative or alternate CAIR authorized account representative: "Until this notice of delegation is superseded by another notice of delegation under paragraph (A)(2)(e)(iv) of rule 3745-109-05 of the Administrative Code, I agree to maintain an email account and to notify the administrator immediately of any change in my e-mail address unless all delegation of authority by me under paragraph (A)(2)(e) of rule 3745-109-05 of the Administrative Code is terminated."

(iv) A notice of delegation submitted under paragraph (A)(2)(e)(iii) of this rule shall be effective, with regard to the CAIR authorized account representative or alternate CAIR authorized account representative identified in such notice, upon receipt of such notice by the administrator and until receipt by the administrator of a superseding notice of delegation submitted by such CAIR authorized account representative or alternate CAIR authorized account representative, as appropriate. The superseding notice of delegation may replace any previously identified agent, add a new agent, or eliminate entirely any delegation of authority.

(v) Any electronic submission covered by the certification in paragraph (A)(2)(e)(iii)(d) of this rule and made in accordance with a notice of delegation effective under paragraph (A)(2)(e)(iv) of this rule shall be deemed to be an electronic submission by the CAIR designated representative or alternate CAIR designated representative submitting such notice of delegation.

(3) Account identification. The administrator shall assign a unique identifying number to each account established under paragraph (A)(1) or (A)(2) of this rule.

(B) Responsibilities of CAIR authorized account representative.

Following the establishment of a CAIR NOx allowance tracking system account, all submissions to the administrator pertaining to the account, including, but not limited to, submissions concerning the deduction or transfer of CAIR NOx allowances in the account, shall be made only by the CAIR authorized account representative for the account.

(C) Recordation of CAIR NOx allowance allocations.

(1) By September 30, 2007, the administrator shall record in the CAIR NOx source's compliance account the CAIR NOx allowances allocated for the CAIR NOx units at the source, as submitted by the director in accordance with paragraph (B)(1) of rule 3745-109-04 of the Administrative Code, for the control periods in 2009, 2010, 2011, 2012, 2013, and 2014.

(2) By December 1, 2009, and December first every six years thereafter, the administrator shall record in the CAIR NOx source's compliance account the CAIR NOx allowances allocated for the CAIR NOx units at the source, as submitted by the director in accordance with paragraph (B)(2)(a) of rule 3745-109-04 of the Administrative Code, for the control periods in the six years, seven years, eight years, nine years, ten years and eleven years after the year of the applicable deadline for recordation under this paragraph.

(3) Serial numbers for allocated CAIR NOx allowances. When recording the allocation of CAIR NOx allowances for a CAIR NOx unit in a compliance account, the administrator shall assign each CAIR NOx allowance a unique identification number that shall include digits identifying the year of the control period for which the CAIR NOx allowance is allocated.

(D) Compliance with CAIR NOx emissions limitation.

(1) Allowance transfer deadline. The CAIR NOx allowances are available to be deducted for compliance with a source's CAIR NOx emissions limitation for a control period in a given calendar year only if the CAIR NOx allowances conform to the following:

(a) Were allocated for the control period in the year or a prior year.

(b) Are held in the compliance account as of the allowance transfer deadline for the control period or are transferred into the compliance account by a CAIR NOx allowance transfer correctly submitted for recordation under paragraph (A) and (B) of rule 3745-109-06 of the Administrative Code by the allowance transfer deadline for the control period.

(2) Deductions for compliance. Following the recordation, in accordance with paragraph (B) of rule 3745-109-06 of the Administrative Code, of CAIR NOx allowance transfers submitted for recordation in a source's compliance account

by the allowance transfer deadline for a control period, the administrator will deduct from the compliance account CAIR NOx allowances available under paragraph (D)(1) of this rule in order to determine whether the source meets the CAIR NOx emissions limitation for the control period, as follows:

(a) Until the amount of CAIR NOx allowances deducted equals the number of tons of total NOx emissions, determined in accordance with rule 3745-109-07 of the Administrative Code, from all CAIR NOx units at the source for the control period.

(b) If there are insufficient CAIR NOx allowances to complete the deductions in paragraph (D)(2)(a) of this rule, until no more CAIR NOx allowances available under paragraph (D)(1) of this rule remain in the compliance account.

(3) Identification of allowances deducted.

(a) Identification of CAIR NOx allowances by serial number. The CAIR authorized account representative for a source's compliance account may request that specific CAIR NOx allowances, identified by serial number, in the compliance account be deducted for emissions or excess emissions for a control period in accordance with paragraph (D)(2) or (D)(4) of this rule. Such request shall be submitted to the administrator by the allowance transfer deadline for the control period and include, in a format prescribed by the administrator, the identification of the CAIR NOx source and the appropriate serial numbers.

(b) First-in, first-out. The administrator will deduct CAIR NOx allowances under paragraph (D)(2) or (D)(4) of this rule from the source's compliance account, in the absence of an identification or in the case of a partial identification of CAIR NOx allowances by serial number under paragraph (D)(3)(a) of this rule, on a first-in, first-out (FIFO) accounting basis in the following order:

(i) First, any CAIR NOx allowances that were allocated to the units at the source, in the order of recordation.

(ii) Second, any CAIR NOx allowances that were allocated to any entity and transferred and recorded in the compliance account pursuant to rule 3745-109-06 of the Administrative Code, in the order of recordation.

(4) Deductions for excess emissions.

(a) After making the deductions for compliance under paragraph (D)(2) of this rule for a control period in a calendar year in which the CAIR NOx source has excess emissions, the administrator shall deduct from the source's

compliance account an amount of CAIR NOx allowances, allocated for the control period in the immediately following calendar year, equal to three times the number of tons of the source's excess emissions.

(b) Any allowance deduction required under paragraph (D)(4)(a) of this rule shall not affect the liability of the owners and operators of the CAIR NOx source or the CAIR NOx units at the source for any fine, penalty, or assessment, or their obligation to comply with any other remedy, for the same violations, as ordered under the Clean Air Act or applicable state law.

(5) Recordation of deductions. The administrator will record in the appropriate compliance account all deductions from such an account under paragraph (D)(2) or (D)(4) of this rule and rule 3745-109-08 of the Administrative Code.

(6) Administrator's action on submissions.

(a) The administrator may review and conduct independent audits concerning any submission under the CAIR NOx annual trading program and make appropriate adjustments of the information in the submissions.

(b) The administrator may deduct CAIR NOx allowances from or transfer CAIR NOx allowances to a source's compliance account based on the information in the submissions, as adjusted under paragraph (D)(6)(a) of this rule, and record such deductions and transfers.

(E) Banking.

(1) CAIR NOx allowances may be banked for future use or transfer in a compliance account or a general account in accordance with paragraph (E)(2) of this rule.

(2) Any CAIR NOx allowance that is held in a compliance account or a general account shall remain in such account unless and until the CAIR NOx allowance is deducted or transferred under paragraphs (D) and (F) of rule 3745-109-05 of the Administrative Code or rule 3745-109-06 or rule 3745-109-08 of the Administrative Code.

(F) Account error.

The administrator may, at the administrator's sole discretion and on the administrator's own motion, correct any error in any CAIR NOx allowance tracking system account. Within ten business days of making such correction, the administrator shall notify the CAIR authorized account representative for the account.

(G) Closing of general accounts.

(1) The CAIR authorized account representative of a general account may submit to the administrator a request to close the account, which shall include a correctly submitted allowance transfer under paragraphs (A) and (B) of rule 3745-109-06 of the Administrative Code for any CAIR NOx allowances in the account to one or more other CAIR NOx allowance tracking system accounts.

(2) If a general account has no allowance transfers in or out of the account for a twelve-month period or longer and does not contain any CAIR NOx allowances, the administrator may notify the CAIR authorized account representative for the account that the account will be closed following twenty business days after the notice is sent. The account will be closed after the twenty-day period unless, before the end of the twenty-day period, the administrator receives a correctly submitted transfer of CAIR NOx allowances into the account under paragraphs (A) and (B) of rule 3745-109-06 of the Administrative Code or a statement submitted by the CAIR authorized account representative demonstrating to the satisfaction of the administrator good cause as to why the account should not be closed.

Effective: 11/14/2013

R.C. 119.032 review dates: 08/29/2013 and 11/14/2018

CERTIFIED ELECTRONICALLY
Certification

11/04/2013
Date

Promulgated Under: 119.03
Statutory Authority: 3704.03(E)
Rule Amplifies: 3704.03(A), 3704.03(E), 3704.03(V)
Prior Effective Dates: 09/27/07

3745-109-06 **CAIR NOx allowance transfers.**

(A) Submission of CAIR NOx allowance transfers.

A CAIR authorized account representative seeking recordation of a CAIR NOx allowance transfer shall submit the transfer to the administrator. To be considered correctly submitted, the CAIR NOx allowance transfer shall include the following elements, in a format specified by the administrator:

(1) The account numbers for both the transferor and transferee accounts.

(2) The serial number of each CAIR NOx allowance that is in the transferor account and is to be transferred.

(3) The name and signature of the CAIR authorized account representative of the transferor account and the date signed.

(B) Recordation.

(1) Within five business days, except as provided in paragraph (B)(2) of this rule, of receiving a CAIR NOx allowance transfer, the administrator shall record a CAIR NOx allowance transfer by moving each CAIR NOx allowance from the transferor account to the transferee account as specified by the request, provided the following occurs:

(a) The transfer is correctly submitted under paragraph (A) of this rule.

(b) The transferor account includes each CAIR NOx allowance identified by serial number in the transfer.

(2) A CAIR NOx allowance transfer that is submitted for recordation after the allowance transfer deadline for a control period and that includes any CAIR NOx allowances allocated for any control period before such allowance transfer deadline will not be recorded until after the administrator completes the deductions under paragraph (D) of rule 3745-109-05 of the Administrative Code for the control period immediately before such allowance transfer deadline.

(3) Where a CAIR NOx allowance transfer submitted for recordation fails to meet paragraph (B)(1) of this rule, the administrator shall not record such transfer.

(C) Notification.

(1) Notification of recordation. Within five business days of recordation of a CAIR NOx allowance transfer under paragraph (B) of this rule, the administrator shall

notify the CAIR authorized account representatives of both the transferor and transferee accounts.

(2) Notification of non-recordation. Within ten business days of receipt of a CAIR NOx allowance transfer that fails to meet paragraph (B)(1) of this rule, the administrator shall notify the CAIR authorized account representatives of both accounts subject to the transfer of a decision not to record the transfer, and the reasons for such non-recordation.

(3) Nothing in this rule shall preclude the submission of a CAIR NOx allowance transfer for recordation following notification of non-recordation.

Effective: 11/14/2013

R.C. 119.032 review dates: 08/29/2013 and 11/14/2018

CERTIFIED ELECTRONICALLY
Certification

11/04/2013
Date

Promulgated Under: 119.03
Statutory Authority: 3704.03(E)
Rule Amplifies: 3704.03(A), 3704.03(E), 3704.03(V)
Prior Effective Dates: 09/27/07

3745-109-07 **CAIR NOx unit monitoring and reporting.**

[Comment: For dates of non-regulatory government publications, publications of recognized organizations and associations, federal rules, and federal statutory provisions referenced in this rule, see paragraph (H) of rule 3745-109-01 of the Administrative Code titled "Referenced materials."]

(A) General requirements.

The owners and operators, and to the extent applicable, the CAIR designated representative, of a CAIR NOx unit, shall comply with the monitoring, record keeping, and reporting requirements as provided in this rule and in 40 CFR Part 75, Subpart H. For purposes of complying with such requirements, the definitions in paragraph (B) of rule 3745-109-01 of the Administrative Code and in 40 CFR 72.2 shall apply, and the terms "affected unit," "designated representative," and "continuous emission monitoring system" (or "CEMS") in 40 CFR Part 75 shall be deemed to refer to the terms "CAIR NOx unit," "CAIR designated representative," and "continuous emission monitoring system" (or "CEMS") respectively, as defined in paragraph (B) of rule 3745-109-01 of the Administrative Code. The owner or operator of a unit that is not a CAIR NOx unit but that is monitored under 40 CFR 75.72(b)(2)(ii) shall comply with the same monitoring, record keeping, and reporting requirements as a CAIR NOx unit.

(1) Requirements for installation, certification, and data accounting. The owner or operator of each CAIR NOx unit shall do the following:

(a) Install all monitoring systems required under this rule for monitoring NOx mass emissions and individual unit heat input (including all systems required to monitor NOx emission rate, NOx concentration, stack gas moisture content, stack gas flow rate, CO2 or O2 concentration, and fuel flow rate, as applicable, in accordance with 40 CFR 75.71 and 40 CFR 75.72).

(b) Successfully complete all certification tests required under paragraph (B) of this rule and meet all other requirements of this rule and 40 CFR Part 75 applicable to the monitoring systems under paragraph (A)(1)(a) of this rule.

(c) Record, report, and quality-assure the data from the monitoring systems under paragraph (A)(1)(a) of this rule.

(2) Compliance deadlines. Except as provided in paragraph (A)(5) of this rule, the owner or operator shall meet the monitoring system certification and other requirements of paragraphs (A)(1)(a) and (A)(1)(b) of this rule on or before the following dates. The owner or operator shall record, report, and quality-assure

the data from the monitoring systems under paragraph (A)(1)(a) of this rule on and after the following dates:

(a) For the owner or operator of a CAIR NOx unit that commences commercial operation before July 1, 2007, by January 1, 2008.

(b) For the owner or operator of a CAIR NOx unit that commences commercial operation on or after July 1, 2007, by the later of the following dates:

(i) January 1, 2008.

(ii) Ninety unit operating days or one hundred eighty calendar days, whichever occurs first, after the date on which the unit commences commercial operation.

(c) For the owner or operator of a CAIR NOx unit for which construction of a new stack or flue or installation of add-on NOx emission controls is completed after the applicable deadline under paragraph (A)(2)(a), (A)(2)(b), (A)(2)(d) or (A)(2)(e) of this rule, by ninety unit operating days or one hundred eighty calendar days, whichever occurs first, after the date on which emissions first exit to the atmosphere through the new stack or flue or add-on NOx emissions controls.

(d) Notwithstanding the dates in paragraphs (A)(2)(a) and (A)(2)(b) of this rule, for the owner or operator of a unit for which a CAIR opt-in permit application is submitted and not withdrawn and a CAIR opt-in permit is not yet issued or denied under rule 3745-109-08 of the Administrative Code, by the date specified in paragraph (E)(2) of rule 3745-109-08 of the Administrative Code.

(e) Notwithstanding the dates in paragraphs (A)(2)(a) and (A)(2)(b) of this rule, for the owner or operator of a CAIR NOx opt-in unit under rule 3745-109-08 of the Administrative Code, by the date on which the CAIR NOx opt-in unit enters the CAIR NOx annual trading program as provided in paragraph (E)(7) of rule 3745-109-08 of the Administrative Code.

(3) Reporting data.

The owner or operator of a CAIR NOx unit that does not meet the applicable compliance date set forth in paragraph (A)(2) of this rule for any monitoring system under paragraph (A)(1)(a) of this rule shall, for each such monitoring system, determine, record, and report maximum potential (or, as appropriate, minimum potential) values for NOx concentration, NOx emission rate, stack gas flow rate, stack gas moisture content, fuel flow rate, and any other parameters required to determine NOx mass emissions and heat input in accordance with 40

CFR 75.31(b)(2) or 40 CFR 75.31(c)(3), 40 CFR Part 75, Appendix D, Section 2.4, or 40 CFR Part 75, Appendix E, Section 2.5 as applicable.

(4) Prohibitions.

(a) No owner or operator of a CAIR NOx unit shall use any alternative monitoring system, alternative reference method, or any other alternative to any requirement of this rule without having obtained prior written approval in accordance with paragraph (F) of this rule.

(b) No owner or operator of a CAIR NOx unit shall operate the unit so as to discharge, or allow to be discharged, NOx emissions to the atmosphere without accounting for all such emissions in accordance with the applicable provisions of this rule and 40 CFR Part 75.

(c) No owner or operator of a CAIR NOx unit shall disrupt the continuous emission monitoring system, any portion thereof, or any other approved emission monitoring method, and thereby avoid monitoring and recording NOx mass emissions discharged into the atmosphere or heat input, except for periods of recertification or periods when calibration, quality assurance testing, or maintenance is performed in accordance with the applicable provisions of this rule and 40 CFR Part 75.

(d) No owner or operator of a CAIR NOx unit shall retire or permanently discontinue use of the continuous emission monitoring system, any component thereof, or any other approved monitoring system under this rule, except under any one of the following circumstances:

(i) During the period that the unit is covered by an exemption under paragraph (D) of rule 3745-109-01 of the Administrative Code that is in effect.

(ii) The owner or operator is monitoring emissions from the unit with another certified monitoring system approved, in accordance with the applicable provisions of this rule and 40 CFR Part 75, by the director for use at that unit that provides emission data for the same pollutant or parameter as the retired or discontinued monitoring system.

(iii) The CAIR designated representative submits notification of the date of certification testing of a replacement monitoring system for the retired or discontinued monitoring system in accordance with paragraph (B)(4)(c)(i) of this rule.

(5) Long term cold storage.

The owner or operator of a CAIR NOx unit is subject to the applicable provisions of 40 CFR Part 75 of this rule concerning units in long-term cold storage.

(B) Initial certification and recertification procedures.

(1) The owner or operator of a CAIR NOx unit shall be exempt from the initial certification requirements of this rule for a monitoring system under paragraph (A)(1)(a) of this rule if the following conditions are met:

(a) The monitoring system has been previously certified in accordance with 40 CFR Part 75.

(b) The applicable quality-assurance and quality-control requirements of 40 CFR 75.21 and 40 CFR Part 75, Appendices B, D, and E are fully met for the certified monitoring system described in paragraph (B)(1)(a) of this rule.

(2) The recertification provisions of this rule shall apply to a monitoring system under paragraph (A)(1)(a) of this rule exempt from initial certification requirements under paragraph (B)(1) of this rule.

(3) If the administrator has previously approved a petition under 40 CFR 75.17(a) or (b) for apportioning the NOx emission rate measured in a common stack or a petition under 40 CFR 75.66 for an alternative to a requirement in 40 CFR 75.12 or 40 CFR 75.17, the CAIR designated representative shall resubmit the petition to the administrator under paragraph (F)(1) of this rule to determine whether the approval applies under the CAIR NOx annual trading program.

(4) Except as provided in paragraph (B)(1) of this rule, the owner or operator of a CAIR NOx unit shall comply with the following initial certification and recertification procedures for a continuous monitoring system (i.e., a continuous emission monitoring system and an excepted monitoring system under 40 CFR Part 75, Appendices D and E) under paragraph (A)(1)(a) of this rule. The owner or operator of a unit that qualifies to use the low mass emissions excepted monitoring methodology under 40 CFR 75.19 or that qualifies to use an alternative monitoring system under 40 CFR Part 75, Subpart E shall comply with the procedures in paragraph (B)(5) or (B)(6) of this rule respectively.

(a) Requirements for initial certification. The owner or operator shall ensure that each continuous monitoring system under paragraph (A)(1)(a) of this rule of the Administrative Code (including the automated data acquisition and handling system) successfully completes all of the initial certification testing required under 40 CFR 75.20 by the applicable deadline in paragraph (A)(2) of this rule. In addition, whenever the owner or operator installs a monitoring system to meet the requirements of this rule in a

location where no such monitoring system was previously installed, initial certification in accordance with 40 CFR 75.20 is required.

(b) Requirements for recertification. Whenever the owner or operator makes a replacement, modification, or change in any certified continuous emission monitoring system under paragraph (A)(1)(a) of this rule that may significantly affect the ability of the system to accurately measure or record NOx mass emissions or heat input rate or to meet the quality-assurance and quality-control requirements of 40 CFR 75.21 or 40 CFR Part 75, Appendix B, the owner or operator shall recertify the monitoring system in accordance with 40 CFR 75.20(b). Furthermore, whenever the owner or operator makes a replacement, modification, or change to the flue gas handling system or the unit's operation that may significantly change the stack flow or concentration profile, the owner or operator shall recertify each continuous emission monitoring system whose accuracy is potentially affected by the change, in accordance with 40 CFR 75.20(b). Examples of changes to a continuous emission monitoring system that require recertification include replacement of the analyzer, complete replacement of an existing continuous emission monitoring system, or change in location or orientation of the sampling probe or site. Any fuel flowmeter system, and any excepted NOx monitoring system under 40 CFR Part 75, Appendix E under paragraph (A)(1)(a) of this rule are subject to the recertification requirements in 40 CFR 75.20(g)(6).

(c) Approval process for initial certification and recertification. Paragraphs (B)(4)(c)(i) to (B)(4)(c)(iv) of this rule apply to both initial certification and recertification of a continuous monitoring system under paragraph (A)(1)(a) of this rule. For recertifications, replace the words "certification" and "initial certification" with the word "recertification", replace the word "certified" with the word "recertified," and follow the procedures in 40 CFR 75.20(b)(5) and 40 CFR 75.20(g)(7) in lieu of the procedures in paragraph (B)(4)(c)(v) of this rule.

(i) Notification of certification. The CAIR designated representative shall submit to the director, the USEPA region V office, and the administrator written notice of the dates of certification testing, in accordance with paragraph (D) of this rule.

(ii) Certification application. The CAIR designated representative shall submit to the director a certification application for each monitoring system. A complete certification application shall include the information specified in 40 CFR 75.63.

(iii) Provisional certification date. The provisional certification date for a monitoring system shall be determined in accordance with 40 CFR 75.20(a)(3). A provisionally certified monitoring system may be used

under the CAIR NOx annual trading program for a period not to exceed one hundred twenty days after receipt by the director of the complete certification application for the monitoring system under paragraph (B)(4)(c)(ii) of this rule. Data measured and recorded by the provisionally certified monitoring system, in accordance with the requirements of 40 CFR Part 75, shall be considered valid quality assured data (retroactive to the date and time of provisional certification), provided that the director does not invalidate the provisional certification by issuing a notice of disapproval within one hundred twenty days of the date of receipt of the complete certification application by the director.

(iv) Certification application approval process. The director shall issue a written notice of approval or disapproval of the certification application to the owner or operator within one hundred twenty days of receipt of the complete certification application under paragraph (B)(4)(c)(ii) of this rule. In the event the director does not issue such a notice within such one hundred twenty-day period, each monitoring system that meets the applicable performance requirements of 40 CFR Part 75 and is included in the certification application shall be deemed certified for use under the CAIR NOx annual trading program.

(a) Approval notice. If the certification application is complete and shows that each monitoring system meets the applicable performance requirements of 40 CFR Part 75, then the director shall issue a written notice of approval of the certification application within one hundred twenty days of receipt.

(b) Incomplete application notice. If the certification application is not complete, then the director shall issue a written notice of incompleteness that sets a reasonable date by which the CAIR designated representative must submit the additional information required to complete the certification application. If the CAIR designated representative does not comply with the notice of incompleteness by the specified date, then the director may issue a notice of disapproval under paragraph (B)(4)(c)(iv)(c) of this rule. The one hundred twenty-day review period shall not begin before receipt of a complete certification application.

(c) Disapproval notice. If the certification application shows that any monitoring system does not meet the performance requirements of 40 CFR Part 75 or if the certification application is incomplete and the requirement for disapproval under paragraph (B)(4)(c)(iv)(b) of this rule is met, then the director shall issue a written notice of disapproval of the certification application. Upon issuance of such notice of disapproval, the provisional certification is invalidated by

the director and the data measured and recorded by each uncertified monitoring system shall not be considered valid quality-assured data beginning with the date and hour of provisional certification (as defined under 40 CFR 75.20(a)(3)). The owner or operator shall follow the procedures for loss of certification in paragraph (B)(4)(c)(v) of this rule for each monitoring system that is disapproved for initial certification.

(d) Audit decertification. The director or, for a CAIR NOx opt-in unit or a unit for which a CAIR opt-in permit application is submitted and not withdrawn and a CAIR opt-in permit is not yet issued or denied under rule 3745-109-08 of the Administrative Code, the administrator may issue a notice of disapproval of the certification status of a monitor in accordance with paragraph (C)(2) of this rule.

(v) Procedures for loss of certification. If the director or the administrator issues a notice of disapproval of a certification application under paragraph (B)(4)(c)(iv)(c) of this rule or a notice of disapproval of certification status under paragraph (B)(4)(c)(iv)(d) of this rule, then:

(a) The owner or operator shall substitute the following values, for each disapproved monitoring system, for each hour of unit operation during the period of invalid data specified under 40 CFR 75.20(a)(4)(iii), 40 CFR 75.20(g)(7), or 40 CFR 75.21(e) and continuing until the applicable date and hour specified under 40 CFR 75.20(a)(5)(i) or 40 CFR 75.20(g)(7):

(i) For a disapproved NOx emission rate (i.e., NOx-diluent) system, the maximum potential NOx emission rate, as defined in 40 CFR 72.2.

(ii) For a disapproved NOx pollutant concentration monitor and disapproved flow monitor, respectively, the maximum potential concentration of NOx and the maximum potential flow rate, as defined in 40 CFR Part 75, Appendix A, Sections 2.1.2.1 and 2.1.4.1.

(iii) For a disapproved moisture monitoring system and disapproved diluent gas monitoring system, respectively, the minimum potential moisture percentage and either the maximum potential CO2 concentration or the minimum potential O2 concentration (as applicable), as defined in 40 CFR Part 75, Appendix A, Sections 2.1.3.1, 2.1.3.2, and 2.1.5.

(iv) For a disapproved fuel flowmeter system, the maximum potential fuel flow rate, as defined in 40 CFR Part 75, Appendix D, Section 2.4.2.1.

(v) For a disapproved excepted NOx monitoring system under 40 CFR Part 75, Appendix E, the fuel-specific maximum potential NOx emission rate, as defined in 40 CFR 72.2.

(b) The CAIR designated representative shall submit a notification of certification retest dates and a new certification application in accordance with paragraphs (B)(4)(c)(i) and (B)(4)(c)(ii) of this rule.

(c) The owner or operator shall repeat all certification tests or other requirements that were failed by the monitoring system, as indicated in the director's or the administrator's notice of disapproval, no later than thirty unit operating days after the date of issuance of the notice of disapproval.

(5) Initial certification and recertification procedures for units using the low mass emission excepted methodology under 40 CFR 75.19. The owner or operator of a unit qualified to use the low mass emissions (LME) excepted methodology under 40 CFR 75.19 shall meet the applicable certification and recertification requirements in 40 CFR 75.19(a)(2) and 40 CFR 75.20(h). If the owner or operator of such a unit elects to certify a fuel flowmeter system for heat input determination, the owner or operator shall also meet the certification and recertification requirements in 40 CFR 75.20(g).

(6) Certification/recertification procedures for alternative monitoring systems. The CAIR designated representative of each unit for which the owner or operator intends to use an alternative monitoring system approved by the administrator and, if applicable, the director under 40 CFR Part 75, Subpart E shall comply with the applicable notification and application procedures of 40 CFR 75.20(f).

(C) Out of control periods.

(1) Whenever any monitoring system fails to meet the quality-assurance and quality-control requirements or data validation requirements of 40 CFR Part 75, data shall be substituted using the applicable missing data procedures in 40 CFR Part 75, Subparts D or H, or 40 CFR Part 75, Appendices D or E.

(2) Audit decertification. Whenever both an audit of a monitoring system and a review of the initial certification or recertification application reveal that any monitoring system should not have been certified or recertified because it did not meet a particular performance specification or other requirement under paragraph (B) of this rule or the applicable provisions of 40 CFR Part 75, both at

the time of the initial certification or recertification application submission and at the time of the audit, the director or, for a CAIR NOx opt-in unit or a unit for which a CAIR opt-in permit application is submitted and not withdrawn and a CAIR opt-in permit is not yet issued or denied under rule 3745-109-08 of the Administrative Code, the administrator shall issue a notice of disapproval of the certification status of such monitoring system. For the purposes of this paragraph, an audit shall be either a field audit or an audit of any information submitted to the director or the administrator. By issuing the notice of disapproval, the director or the administrator revokes prospectively the certification status of the monitoring system. The data measured and recorded by the monitoring system shall not be considered valid quality-assured data from the date of issuance of the notification of the revoked certification status until the date and time that the owner or operator completes subsequently approved initial certification or recertification tests for the monitoring system. The owner or operator shall follow the applicable initial certification or recertification procedures in paragraph (B) of this rule for each disapproved monitoring system.

(D) Notifications.

The CAIR designated representative for a CAIR NOx unit shall submit written notice to the director and the administrator in accordance with 40 CFR 75.61.

(E) Record keeping and reporting.

(1) General provisions. The CAIR designated representative shall comply with all record keeping and reporting requirements in this paragraph, the applicable record keeping and reporting requirements under 40 CFR 75.73, and the requirements of paragraph (A)(5)(a) of rule 3745-109-02 of the Administrative Code.

(2) Monitoring plans. The owner or operator of a CAIR NOx unit shall comply with requirements of 40 CFR 75.73(c) and (e) and, for a unit for which a CAIR opt-in permit application is submitted and not withdrawn and a CAIR opt-in permit is not yet issued or denied under paragraphs (D) and (E)(1) of rule 3745-109-08 of the Administrative Code.

(3) Certification applications. The CAIR designated representative shall submit an application to the director within forty-five days after completing all initial certification or recertification tests required under paragraph (B) of this rule, including the information required under 40 CFR 75.63.

(4) Quarterly reports. The CAIR designated representative shall submit quarterly reports, as follows:

(a) The CAIR designated representative shall report the NOx mass emissions data and heat input data for the CAIR NOx unit, in an electronic quarterly report in a format prescribed by the administrator, for each calendar quarter beginning with the following:

(i) For a unit that commences commercial operation before July 1, 2007, the calendar quarter covering January 1, 2008 to March 31, 2008.

(ii) For a unit that commences commercial operation on or after July 1, 2007, the calendar quarter corresponding to the earlier of the date of provisional certification or the applicable deadline for initial certification under paragraph (A)(2) of this rule, unless that quarter is the third or fourth quarter of 2007, in which case reporting shall commence in the quarter covering January 1, 2008 to March 31, 2008.

(iii) Notwithstanding paragraphs (E)(4)(a)(i) and (E)(4)(a)(ii) of this rule, for a unit for which a CAIR opt-in permit application is submitted and not withdrawn and a CAIR opt-in permit is not yet issued or denied under rule 3745-109-08 of the Administrative Code, the calendar quarter corresponding to the date specified in paragraph (E)(2) of rule 3745-109-08 of the Administrative Code.

(iv) Notwithstanding paragraphs (E)(4)(a)(i) and (E)(4)(a)(ii) of this rule, for a CAIR NOx opt-in unit under rule 3745-109-08 of the Administrative Code, the calendar quarter corresponding to the date on which the CAIR NOx opt-in unit enters the CAIR NOx annual trading program as provided in paragraph (E)(7) of rule 3745-109-08 of the Administrative Code.

(b) The CAIR designated representative shall submit each quarterly report to the administrator within thirty days following the end of the calendar quarter covered by the report. Quarterly reports shall be submitted in the manner specified in 40 CFR 75.73(f).

(c) For CAIR NOx units that are also subject to an acid rain emissions limitation or the CAIR NOx ozone season trading program, CAIR SO2 trading program, or Hg budget trading program, quarterly reports shall include the applicable data and information required by 40 CFR Part 75, Subparts F to I, as applicable, in addition to the NOx mass emission data, heat input data, and other information required by this rule.

(5) Compliance certification. The CAIR designated representative shall submit to the administrator a compliance certification (in a format prescribed by the administrator) in support of each quarterly report based on reasonable inquiry of those persons with primary responsibility for ensuring that all of the unit's

emissions are correctly and fully monitored. The certification shall state the following:

(a) The monitoring data submitted were recorded in accordance with the applicable requirements of this rule and 40 CFR Part 75, including the quality assurance procedures and specifications.

(b) For a unit with add-on NOx emission controls and for all hours where NOx data are substituted in accordance with 40 CFR 75.34(a)(1), the add-on emission controls were operating within the range of parameters listed in the quality assurance/quality control program under 40 CFR Part 75, Appendix B, and the substitute data values do not systematically underestimate NOx emissions.

(F) Petitions.

(1) Except as provided in paragraph (F)(2)(b) of this rule, the CAIR designated representative of a CAIR NOx unit that is subject to an acid rain emissions limitation may submit a petition under 40 CFR 75.66 to the administrator requesting approval to apply an alternative to any requirement of this rule. Application of an alternative to any requirement of this rule is in accordance with this rule only to the extent that the petition is approved in writing by the administrator, in consultation with the director.

(2) Petition process.

(a) The CAIR designated representative of a CAIR NOx unit that is not subject to an acid rain emissions limitation may submit a petition under 40 CFR 75.66 to the director and the administrator requesting approval to apply an alternative to any requirement of this rule. Application of an alternative to any requirement of this rule is in accordance with this rule only to the extent that the petition is approved in writing by both the director and the administrator.

(b) The CAIR designated representative of a CAIR NOx unit that is subject to an acid rain emissions limitation may submit a petition under 40 CFR 75.66 to the director and the administrator requesting approval to apply an alternative to a requirement concerning any additional continuous emission monitoring system required under 40 CFR 75.72. Application of an alternative to any such requirement is in accordance with this rule only to the extent that the petition is approved in writing by both the director and the administrator.

Effective: 11/14/2013

R.C. 119.032 review dates: 08/29/2013 and 11/14/2018

CERTIFIED ELECTRONICALLY
Certification

11/04/2013
Date

Promulgated Under: 119.03
Statutory Authority: 3704.03(E)
Rule Amplifies: 3704.03(A), 3704.03(E), 3704.03(V)
Prior Effective Dates: 09/27/07, 07/16/09

3745-109-08 **CAIR NOx opt-in units.**

[Comment: For dates of non-regulatory government publications, publications of recognized organizations and associations, federal rules, and federal statutory provisions referenced in this rule, see paragraph (H) of rule 3745-109-01 of the Administrative Code titled "Referenced materials."]

(A) Applicability.

A CAIR NOx opt-in unit must be a unit that conforms to the following:

(1) Is located in the state.

(2) Is not a CAIR NOx unit under paragraph (C) of rule 3745-109-01 of the Administrative Code and is not covered by a retired unit exemption under paragraph (D) of rule 3745-109-01 of the Administrative Code that is in effect.

(3) Is not covered by a retired unit exemption under 40 CFR 72.8 that is in effect.

(4) Has or is required or qualified to have a Title V operating permit or other federally enforceable permit.

(5) Vents all of its emissions to a stack and can meet the monitoring, record keeping, and reporting requirements of rule 3745-109-07 of the Administrative Code.

(B) General requirements.

(1) Except as otherwise provided in paragraphs (A) to (C) and (E) to (G) of rule 3745-109-01 of the Administrative Code, rules 3745-109-02, 3745-109-03, and 3745-109-05 to 3745-109-07 of the Administrative Code, a CAIR NOx opt-in unit shall be treated as a CAIR NOx unit for purposes of applying such paragraphs and rules.

(2) Solely for purposes of applying, as provided in this rule, the requirements of rule 3745-109-07 of the Administrative Code to a unit for which a CAIR opt-in permit application is submitted and not withdrawn and a CAIR opt-in permit is not yet issued or denied under this rule, such unit shall be treated as a CAIR NOx unit before issuance of a CAIR opt-in permit for such unit.

(C) CAIR designated representative.

Any CAIR NOx opt-in unit, and any unit for which a CAIR opt-in permit application is submitted and not withdrawn and a CAIR opt-in permit is not yet issued or denied under this rule, located at the same source as one or more CAIR NOx units shall

have the same CAIR designated representative and alternate CAIR designated representative as such CAIR NOx units.

(D) Applying for CAIR opt-in permit.

(1) Applying for initial CAIR opt-in permit. The CAIR designated representative of a unit meeting the requirements for a CAIR NOx opt-in unit in paragraph (A) of this rule may apply for an initial CAIR opt-in permit at any time, except as provided under paragraphs (G)(6) and (G)(7) of rule 3745-109-08 of the Administrative Code, and, in order to apply, must submit the following:

(a) A complete CAIR permit application under paragraph (C) of rule 3745-109-03 of the Administrative Code.

(b) A certification, in a format specified by the director, that the unit meets the following:

(i) Is not a CAIR NOx unit under paragraph (C) of rule 3745-109-01 of the Administrative Code and is not covered by a retired unit exemption under paragraph (D) of rule 3745-109-01 of the Administrative Code that is in effect.

(ii) Is not covered by a retired unit exemption under 40 CFR 72.8 that is in effect.

(iii) Vents all of its emissions to a stack.

(iv) Has documented heat input for more than eight hundred seventy-six hours during the six months immediately preceding submission of the CAIR permit application under paragraph (C) of rule 3745-109-03 of the Administrative Code.

(c) A monitoring plan in accordance with rule 3745-109-07 of the Administrative Code.

(d) A complete certificate of representation under paragraph (D) of rule 3745-109-02 of the Administrative Code consistent with paragraph (D) of this rule, if no CAIR designated representative has been previously designated for the source that includes the unit.

(e) A statement, in a format specified by the director, whether the CAIR designated representative requests that the unit be allocated CAIR NOx allowances under paragraph (I)(2) or (I)(3) of this rule (subject to the conditions in paragraphs (E)(8) and (G)(7) of this rule). If allocation under paragraph (I)(3) of this rule is requested, this statement shall include a statement that the owners and operators of the unit intend to repower the

unit before January 1, 2015 and that they will provide, upon request, documentation demonstrating such intent.

(2) Duty to reapply.

(a) The CAIR designated representative of a CAIR NOx opt-in unit shall submit a complete CAIR permit application under paragraph (C) of rule 3745-109-03 of the Administrative Code to renew the CAIR opt-in unit permit in accordance with the director's regulations for Title V operating permits, or the director's regulations for other federally enforceable permits if applicable, addressing permit renewal.

(b) Unless the director issues a notification of acceptance of withdrawal of the CAIR NOx opt-in unit from the CAIR NOx annual trading program in accordance with paragraph (G) of this rule or the unit becomes a CAIR NOx unit under paragraph (C) of rule 3745-109-01 of the Administrative Code, the CAIR NOx opt-in unit shall remain subject to the requirements for a CAIR NOx opt-in unit, even if the CAIR designated representative for the CAIR NOx opt-in unit fails to submit a CAIR permit application that is required for renewal of the CAIR opt-in permit under paragraph (D)(2)(a) of this rule.

(E) Opt-in process.

The director shall issue or deny a CAIR opt-in permit for a unit for which an initial application for a CAIR opt-in permit under paragraph (D) of this rule is submitted in accordance with the following:

(1) Interim review of monitoring plan. The director and the administrator shall determine, on an interim basis, the sufficiency of the monitoring plan accompanying the initial application for a CAIR opt-in permit under paragraph (D) of this rule. A monitoring plan is sufficient, for purposes of interim review, if the plan appears to contain information demonstrating that the NOx emissions rate and heat input of the unit and all other applicable parameters are monitored and reported in accordance with rule 3745-109-07 of the Administrative Code. A determination of sufficiency shall not be construed as acceptance or approval of the monitoring plan.

(2) Monitoring and reporting.

(a) Monitoring.

(i) If the director and the administrator determine that the monitoring plan is sufficient under paragraph (E)(1) of this rule, the owner or operator shall monitor and report the NOx emissions rate and the heat input of the unit and all other applicable parameters, in accordance with rule

3745-109-07 of the Administrative Code, starting on the date of certification of the appropriate monitoring systems under rule 3745-109-07 of the Administrative Code and continuing until a CAIR opt-in permit is denied under paragraph (E)(6) of this rule or, if a CAIR opt-in permit is issued, the date and time when the unit is withdrawn from the CAIR NOx annual trading program in accordance with paragraph (G) of this rule.

(ii) The monitoring and reporting under paragraph (E)(2)(a)(i) of this rule shall include the entire control period immediately before the date on which the unit enters the CAIR NOx annual trading program under paragraph (E)(7) of this rule, during which period monitoring system availability must not be less than ninety per cent under rule 3745-109-07 of the Administrative Code and the unit must be in full compliance with any applicable state or federal emissions or emissions-related requirements.

(b) To the extent the NOx emissions rate and the heat input of the unit are monitored and reported in accordance with rule 3745-109-07 of the Administrative Code for one or more control periods, in addition to the control period under paragraph (E)(2)(a)(ii) of this rule, during which control periods monitoring system availability is not less than ninety per cent under rule 3745-109-07 of the Administrative Code and the unit is in full compliance with any applicable state or federal emissions or emissions-related requirements and which control periods begin not more than three years before the unit enters the CAIR NOx annual trading program under paragraph (E)(7) of this rule, such information shall be used as provided in paragraphs (E)(3) and (E)(4) of this rule.

(3) Baseline heat input. The unit's baseline heat input shall equal either of the following:

(a) If the unit's NOx emissions rate and heat input are monitored and reported for only one control period, in accordance with paragraph (E)(2)(a) of this rule, the unit's total heat input (in mmBtu) for the control period.

(b) If the unit's NOx emissions rate and heat input are monitored and reported for more than one control period, in accordance with paragraphs (E)(2)(a) and (E)(2)(b) of this rule, the average of the amounts of the unit's total heat input (in mmBtu) for the control period under paragraphs (E)(2)(a)(ii) and (E)(2)(b) of this rule.

(4) Baseline NOx emission rate. The unit's baseline NOx emission rate shall equal one of the following:

(a) If the unit's NOx emissions rate and heat input are monitored and reported for only one control period, in accordance with paragraph (E)(2)(a) of this rule, the unit's NOx emissions rate (in pounds per mmBtu) for the control period.

(b) If the unit's NOx emissions rate and heat input are monitored and reported for more than one control period, in accordance with paragraphs (E)(2)(a) and (E)(2)(b) of this rule, and the unit does not have add-on NOx emission controls during any such control periods, the average of the amounts of the unit's NOx emissions rate (in pounds per mmBtu) for the control period under paragraphs (E)(2)(a)(ii) and (E)(2)(b) of this rule.

(c) If the unit's NOx emissions rate and heat input are monitored and reported for more than one control period, in accordance with paragraphs (E)(2)(a) and (E)(2)(b) of this rule, and the unit has add-on NOx emission controls during any such control periods, the average of the amounts of the unit's NOx emissions rate (in pounds per mmBtu) for such control period during which the unit has add-on NOx emission controls.

(5) Issuance of CAIR opt-in permit. After calculating the baseline heat input and the baseline NOx emissions rate for the unit under paragraphs (E)(3) and (E)(4) of this rule and if the director determines that the CAIR designated representative shows that the unit meets the requirements for a CAIR NOx opt-in unit in paragraph (A) of this rule and meets the elements certified in paragraph (D)(1)(b) of this rule, the director shall issue a CAIR opt-in permit. The director shall provide a copy of the CAIR opt-in permit to the administrator, who shall then establish a compliance account for the source that includes the CAIR NOx opt-in unit unless the source already has a compliance account.

(6) Denial of CAIR opt-in permit. Notwithstanding paragraphs (E)(1) to (E)(5) of this rule, if at any time before issuance of a CAIR opt-in permit for the unit, the director determines that the CAIR designated representative fails to show that the unit meets the requirements for a CAIR NOx opt-in unit in paragraph (A) of this rule or meets the elements certified in paragraph (D)(1)(b) of this rule, the director shall issue a denial of a CAIR NOx opt-in permit for the unit.

(7) Date of entry into CAIR NOx annual trading program. A unit for which an initial CAIR opt-in permit is issued by the director shall become a CAIR NOx opt-in unit, and a CAIR NOx unit, as of the later of January 1, 2009 or January first of the first control period during which such CAIR opt-in permit is issued.

(8) Repowered CAIR NOx opt-in unit.

(a) If the CAIR designated representative requests, and the director issues a CAIR opt-in permit providing for, allocation to a CAIR NOx opt-in unit of CAIR NOx allowances under paragraph (I)(3) of this rule and such unit is

repowered after its date of entry into the CAIR NOx annual trading program under paragraph (E)(7) of this rule, the repowered unit shall be treated as a CAIR NOx opt-in unit replacing the original CAIR NOx opt-in unit, as of the date of start-up of the repowered unit's combustion chamber.

(b) Notwithstanding paragraphs (E)(3) and (E)(4) of this rule, as of the date of start-up under paragraph (E)(8)(a) of this rule, the repowered unit shall be deemed to have the same date of commencement of operation, date of commencement of commercial operation, baseline heat input, and baseline NOx emission rate as the original CAIR NOx opt-in unit, and the original CAIR NOx opt-in unit shall no longer be treated as a CAIR NOx opt-in unit or a CAIR NOx unit.

(F) CAIR opt-in permit contents.

(1) Each CAIR opt-in permit shall contain the following:

(a) All elements required for a complete CAIR permit application under paragraph (C) of rule 3745-109-03 of the Administrative Code.

(b) The certification in paragraph (D)(1)(b) of this rule.

(c) The unit's baseline heat input under paragraph (E)(3) of this rule.

(d) The unit's baseline NOx emission rate under paragraph (E)(4) of this rule.

(e) A statement whether the unit is to be allocated CAIR NOx allowances under paragraph (I)(2) or (I)(3) of this rule (subject to the conditions in paragraphs (E)(8) and (G)(7) of this rule).

(f) A statement that the unit may withdraw from the CAIR NOx annual trading program only in accordance with paragraph (G) of rule.

(g) A statement that the unit is subject to, and the owners and operators of the unit must comply with, the requirements of paragraph (H) of this rule.

(2) Each CAIR opt-in permit is deemed to incorporate automatically the definitions of terms under paragraph (B) of rule 3745-109-01 of the Administrative Code and, upon recordation by the administrator under rule 3745-109-05 or 3745-109-06 of the Administrative Code, every allocation, transfer, or deduction of CAIR NOx allowances to or from the compliance account of the source that includes a CAIR NOx opt-in unit covered by the CAIR opt-in permit.

(3) The CAIR opt-in permit shall be included, in a format specified by the permitting authority, in the CAIR permit for the source where the CAIR NOX opt-in unit is

located and in a Title V operating permit or other federally enforceable permit for the source.

(G) Withdrawal from CAIR NOx annual trading program.

Except as provided under paragraph (G)(7) of this rule, a CAIR NOx opt-in unit may withdraw from the CAIR NOx annual trading program, but only if the director issues a notification to the CAIR designated representative of the CAIR NOx opt-in unit of the acceptance of the withdrawal of the CAIR NOx opt-in unit in accordance with paragraph (G)(4) of this rule.

(1) Requesting withdrawal. In order to withdraw a CAIR NOx opt-in unit from the CAIR NOx annual trading program, the CAIR designated representative of the CAIR NOx opt-in unit shall submit to the director a request to withdraw effective as of midnight of December thirty-first of a specified calendar year, which date must be at least four years after December thirty-first of the year of entry into the CAIR NOx annual trading program under paragraph (E)(7) of this rule. The request must be submitted no later than ninety days before the requested effective date of withdrawal.

(2) Conditions for withdrawal. Before a CAIR NOx opt-in unit covered by a request under paragraph (G)(1) of this rule may withdraw from the CAIR NOx annual trading program and the CAIR opt-in permit may be terminated under paragraph (G)(5) of this rule, the following conditions shall be met:

(a) For the control period ending on the date on which the withdrawal is to be effective, the source that includes the CAIR NOx opt-in unit must meet the requirement to hold CAIR NOx allowances under paragraph (E)(3) of rule 3745-109-01 of the Administrative Code and cannot have any excess emissions.

(b) After the requirement for withdrawal under paragraph (G)(2)(a) of this rule is met, the administrator shall deduct from the compliance account of the source that includes the CAIR NOx opt-in unit CAIR NOx allowances equal in amount to and allocated for the same or a prior control period as any CAIR NOx allowances allocated to the CAIR NOx opt-in unit under paragraph (I) of this rule for any control period for which the withdrawal is to be effective. If there are no remaining CAIR NOx units at the source, the administrator shall close the compliance account, and the owners and operators of the CAIR NOx opt-in unit may submit a CAIR NOx allowance transfer for any remaining CAIR NOx allowances to another CAIR NOx allowance tracking system in accordance with rule 3745-109-06 of the Administrative Code.

(3) Notification.

(a) After the requirements for withdrawal under paragraphs (G)(1) and (G)(2) of this rule are met (including deduction of the full amount of CAIR NOx allowances required), the director shall issue a notification to the CAIR designated representative of the CAIR NOx opt-in unit of the acceptance of the withdrawal of the CAIR NOx opt-in unit as of midnight on December thirty-first of the calendar year for which the withdrawal was requested.

(b) If the requirements for withdrawal under paragraphs (G)(1) and (G)(2) of this rule are not met, the director shall issue a notification to the CAIR designated representative of the CAIR NOx opt-in unit that the CAIR NOx opt-in unit's request to withdraw is denied. Such CAIR NOx opt-in unit shall continue to be a CAIR NOx opt-in unit.

(4) Permit amendment. After the director issues a notification under paragraph (G)(3)(a) of this rule that the requirements for withdrawal have been met, the director shall revise the CAIR permit covering the CAIR NOx opt-in unit to terminate the CAIR opt-in permit for such unit as of the effective date specified under paragraph (E)(3)(a) of this rule. The unit shall continue to be a CAIR NOx opt-in unit until the effective date of the termination and shall comply with all requirements under the CAIR NOx annual trading program concerning any control periods for which the unit is a CAIR NOx opt-in unit, even if such requirements arise or must be complied with after the withdrawal takes effect.

(5) Reapplication upon failure to meet conditions of withdrawal. If the director denies the CAIR NOx opt-in unit's request to withdraw, the CAIR designated representative may submit another request to withdraw in accordance with paragraphs (G)(1) and (G)(2) of this rule.

(6) Ability to reapply to the CAIR NOx annual trading program. Once a CAIR NOx opt-in unit withdraws from the CAIR NOx annual trading program and its CAIR opt-in permit is terminated under this rule, the CAIR designated representative may not submit another application for a CAIR opt-in permit under paragraph (D) of this rule for such CAIR NOx opt-in unit before the date that is four years after the date on which the withdrawal became effective. Such new application for a CAIR opt-in permit shall be treated as an initial application for a CAIR opt-in permit under paragraph (E) of this rule.

(7) Inability to withdraw. Notwithstanding paragraphs (G)(1) to (G)(6) of this rule, a CAIR NOx opt-in unit shall not be eligible to withdraw from the CAIR NOx annual trading program if the CAIR designated representative of the CAIR NOx opt-in unit requests, and the director issues a CAIR NOx opt-in permit providing for, allocation to the CAIR NOx opt-in unit of CAIR NOx allowances under paragraph (I)(3) of this rule.

(H) Change in regulatory status.

(1) Notification. If a CAIR NOx opt-in unit becomes a CAIR NOx unit under paragraph (C) of rule 3745-109-01 of the Administrative Code, then the CAIR designated representative shall notify in writing the director and the administrator of such change in the CAIR NOx opt-in unit's regulatory status, within thirty days of such change.

(2) Director's and administrator's actions.

(a) If a CAIR NOx opt-in unit becomes a CAIR NOx unit under paragraph (C) of rule 3745-109-01 of the Administrative Code, the director shall revise the CAIR NOx opt-in unit's CAIR opt-in permit to meet the requirements of a CAIR permit under paragraph (D) of rule 3745-109-03 of the Administrative Code, and remove the CAIR opt-in permit provisions, as of the date on which the CAIR NOx opt-in unit becomes a CAIR NOx unit under paragraph (C) of rule 3745-109-01 of the Administrative Code.

(b) Allowance deductions.

(i) The administrator shall deduct from the compliance account of the source that includes the CAIR NOx opt-in unit that becomes a CAIR NOx unit under paragraph (C) of rule 3745-109-01 of the Administrative Code, CAIR NOx allowances equal in amount to and allocated for the same or a prior control period as the following:

(a) Any CAIR NOx allowances allocated to the CAIR NOx opt-in unit under paragraph (I) of this rule for any control period after the date on which the CAIR NOx opt-in unit becomes a CAIR NOx unit under paragraph (C) of rule 3745-109-01 of the Administrative Code.

(b) If the date on which the CAIR NOx opt-in unit becomes a CAIR NOx unit under paragraph (C) of rule 3745-109-01 of the Administrative Code is not December thirty-first, the CAIR NOx allowances allocated to the CAIR NOx opt-in unit under paragraph (I) of this rule for the control period that includes the date on which the CAIR NOx opt-in unit becomes a CAIR NOx unit under paragraph (C) of rule 3745-109-01 of the Administrative Code, multiplied by the ratio of the number of days, in the control period, starting with the date on which the CAIR NOx opt-in unit becomes a CAIR NOx unit under paragraph (C) of rule 3745-109-01 of the Administrative Code divided by the total number of days in the control period and rounded to the nearest whole allowance as appropriate.

(ii) The CAIR designated representative shall ensure that the compliance account of the source that includes the CAIR NOx opt-in unit that

becomes a CAIR NOx unit under paragraph (C) of rule 3745-109-01 of the Administrative Code contains the CAIR NOx allowances necessary for completion of the deduction under paragraph (H)(2)(b)(i) of this rule.

(c) Allowance allocations.

(i) For every control period after the date on which the CAIR NOx opt-in unit becomes a CAIR NOx unit under paragraph (C) of rule 3745-109-01 of the Administrative Code, the CAIR NOx opt-in unit shall be allocated CAIR NOx allowances under paragraph (C) of rule 3745-109-04 of the Administrative Code.

(ii) If the date on which the CAIR NOx opt-in unit becomes a CAIR NOx unit under paragraph (C) of rule 3745-109-01 of the Administrative Code is not December thirty-first, the following amount of CAIR NOx allowances shall be allocated to the CAIR NOx opt-in unit (as a CAIR NOx unit) under paragraph (C) of rule 3745-109-04 of the Administrative Code for the control period that includes the date on which the CAIR NOx opt-in unit becomes a CAIR NOx unit under paragraph (C) of rule 3745-109-01 of the Administrative Code:

The amount of CAIR NOx allowances otherwise allocated to the CAIR NOx opt-in unit (as a CAIR NOx unit) under paragraph (C) of rule 3745-109-04 of the Administrative Code for the control period multiplied by the ratio of the number of days in the control period, starting with the date on which the CAIR NOx opt-in unit becomes a CAIR NOx unit under paragraph (C) of rule 3745-109-01 of the Administrative Code, divided by the total number of days in the control period, and rounded to the nearest whole allowance, as appropriate.

(I) CAIR NOx allowance allocations to CAIR NOx opt-in units.

(1) Timing requirements.

(a) When the CAIR opt-in permit is issued under paragraph (E)(5) of this rule, the director shall allocate CAIR NOx allowances to the CAIR NOx opt-in unit, and submit to the administrator the allocation for the control period in which a CAIR NOx opt-in unit enters the CAIR NOx annual trading program under paragraph (E)(7) of this rule, in accordance with paragraph (I)(2) or (I)(3) of this rule.

(b) By no later than October thirty-first of the control period after the control period in which a CAIR opt-in unit enters the CAIR NOx annual trading program under paragraph (E)(7) of this rule, and October thirty-first of each year thereafter, the director shall allocate CAIR NOx allowances to the

CAIR NOx opt-in unit, and submit to the administrator the allocation for the control period that includes such submission deadline and in which the unit is a CAIR NOx opt-in unit, in accordance with paragraph (I)(2) or (I)(3) of this rule.

(2) Calculation of allocation. For each control period for which a CAIR NOx opt-in unit is to be allocated CAIR NOx allowances, the director shall allocate in accordance with the following procedures:

(a) The heat input (in mmBtu) used for calculating the CAIR NOx allowance allocation shall be the lesser of the following:

(i) The CAIR NOx opt-in unit's baseline heat input determined under paragraph (E)(3) of this rule.

(ii) The CAIR NOx opt-in unit's heat input, as determined in accordance with rule 3745-109-07 of the Administrative Code, for immediately prior control period, except when the allocation is being calculated for the control period in which the CAIR NOx opt-in unit enters the CAIR NOx annual trading program under paragraph (E)(7) of this rule.

(b) The NOx emission rate (in pounds per mmBtu) used for calculating CAIR NOx allowance allocations shall be the lesser of the following:

(i) The CAIR NOx opt-in unit's baseline NOx emissions rate (in pounds per mmBtu) determined under paragraph (E)(4) of this rule and multiplied by seventy per cent.

(ii) The most stringent state or federal NOx emissions limitation applicable to the CAIR NOx opt-in unit at any time during the control period for which CAIR NOx allowances are to be allocated.

(c) The director shall allocate CAIR NOx allowances to the CAIR NOx opt-in unit in an amount equaling the heat input under paragraph (I)(2)(a) of this rule, multiplied by the NOx emission rate under paragraph (I)(2)(b) of this rule, divided by two thousand pounds per ton, and rounded to the nearest whole allowance as appropriate.

(3) Notwithstanding paragraph (I)(2) of this rule and if the CAIR designated representative requests, and the director issues a CAIR opt-in permit (based on a demonstration of the intent to repower stated under paragraph (D)(1)(e) of this rule) providing for, allocation to a CAIR NOx opt-in unit of CAIR NOx allowances under this paragraph (subject to the conditions in paragraphs (E)(8) and (G)(7) of this rule), the director shall allocate to the CAIR NOx opt-in unit as follows:

(a) For each control period in 2009 to 2014 for which the CAIR NOx opt-in unit is to be allocated CAIR NOx allowances:

(i) The heat input (in mmBtu) used for calculating CAIR NOx allowance allocations shall be determined as described in paragraph (I)(2)(a) of this rule.

(ii) The NOx emission rate (in pounds per mmBtu) used for calculating CAIR NOx allowance allocations shall be the lesser of the following:

(a) The CAIR NOx opt-in unit's baseline NOx emissions rate (in pounds per mmBtu) determined under paragraph (E)(4) of this rule.

(b) The most stringent state or federal NOx emissions limitation applicable to the CAIR NOx opt-in unit at any time during the control period in which the CAIR NOx opt-in unit enters the CAIR NOx annual trading program under paragraph (E)(7) of this rule.

(iii) The director shall allocate CAIR NOx allowances to the CAIR NOx opt-in unit in an amount equaling the heat input under paragraph (I)(3)(a)(i) of this rule, multiplied by the NOx emission rate under paragraph (I)(3)(a)(ii) of this rule, divided by two thousand pounds per ton, and rounded to the nearest whole allowance as appropriate.

(b) For each control period in 2015 and thereafter for which the CAIR NOx opt-in unit is to be allocated CAIR NOx allowances:

(i) The heat input (in mmBtu) used for calculating the CAIR NOx allowance allocations shall be determined as described in paragraph (I)(2)(a) of this rule.

(ii) The NOx emission rate (in pounds per mmBtu) used for calculating the CAIR NOx allowance allocation shall be the lesser of the following:

(a) 0.15 pounds per mmBtu.

(b) The CAIR NOx opt-in unit's baseline NOx emissions rate (in pounds per mmBtu) determined under paragraph (E)(4) of this rule.

(c) The most stringent state or federal NOx emissions limitation applicable to the CAIR NOx opt-in unit at any time during the control period for which CAIR NOx allowances are to be allocated.

(iii) The director shall allocate CAIR NOx allowances to the CAIR NOx opt-in unit in an amount equaling the heat input under paragraph (I)(3)(b)(i) of this rule multiplied by the NOx emission rate under paragraph (I)(3)(b)(ii) of this rule, divided by two thousand pounds per ton, and rounded to the nearest whole allowance as appropriate.

(4) Recordation.

(a) The administrator shall record, in the compliance account of the source that includes the CAIR NOx opt-in unit, the CAIR NOx allowances allocated by the director to the CAIR NOx opt-in unit under paragraph (I)(1)(a) of this rule.

(b) By December first, of the control period in which a CAIR opt-in unit enters the CAIR NOx annual trading program under (E)(7) of this rule, and December first of each year thereafter, the administrator shall record, in the compliance account of the source that includes the CAIR NOx opt-in unit, the CAIR NOx allowances allocated by the director to the CAIR NOx opt-in unit under paragraph (I)(1)(b) of this rule.

Effective: 11/14/2013

R.C. 119.032 review dates: 08/29/2013 and 11/14/2018

CERTIFIED ELECTRONICALLY
Certification

11/04/2013
Date

Promulgated Under: 119.03
Statutory Authority: 3704.03(E)
Rule Amplifies: 3704.03(A), 3704.03(E), 3704.03(V)
Prior Effective Dates: 09/27/07, 07/16/09

3745-109-09 **CAIR designated representative for CAIR SO2 sources.**

[Comment: For dates of non-regulatory government publications, publications of recognized organizations and associations, federal rules, and federal statutory provisions referenced in this rule, see paragraph (H) of rule 3745-109-01 of the Administrative Code titled "Referenced materials."]

(A) Authorization and responsibilities of CAIR designated representative.

(1) Except as provided under paragraph (B) of this rule, each CAIR SO2 source, including all CAIR SO2 units at the source, shall have one and only one CAIR designated representative, with regard to all matters under the CAIR SO2 trading program concerning the source or any CAIR SO2 unit at the source.

(2) The CAIR designated representative of the CAIR SO2 source shall be selected by an agreement binding on the owners and operators of the source and all CAIR SO2 units at the source and shall act in accordance with the certification statement in paragraph (D)(1)(d) of this rule.

(3) Upon receipt by the administrator of a complete certificate of representation under paragraph (D) of this rule, the CAIR designated representative of the source shall represent and, by his or her representations, actions, inactions, or submissions, legally bind each owner and operator of the CAIR SO2 source represented and each CAIR SO2 unit at the source in all matters pertaining to the CAIR SO2 trading program, notwithstanding any agreement between the CAIR designated representative and such owners and operators. The owners and operators shall be bound by any decision or order issued to the CAIR designated representative by the director, the administrator, or a court regarding the source or unit.

(4) No CAIR permit will be issued, no emissions data reports will be accepted, and no CAIR SO2 allowance tracking system account will be established for a CAIR SO2 unit at a source, until the administrator has received a complete certificate of representation under paragraph (D) of this rule for a CAIR designated representative of the source and the CAIR SO2 units at the source.

(5) Submissions under the CAIR SO2 trading program.

(a) Each submission under the CAIR SO2 trading program shall be submitted, signed, and certified by the CAIR designated representative for each CAIR SO2 source on behalf of which the submission is made. Each such submission shall include the following certification statement by the CAIR designated representative: "I am authorized to make this submission on behalf of the owners and operators of the source or units for which the submission is made. I certify under penalty of law that I have personally

examined, and am familiar with, the statements and information submitted in this document and all its attachments. Based on my inquiry of those individuals with primary responsibility for obtaining the information, I certify that the statements and information are to the best of my knowledge and belief true, accurate, and complete. I am aware that there are significant penalties for submitting false statements and information or omitting required statements and information, including the possibility of fine or imprisonment."

(b) The director and the administrator will accept or act on a submission made on behalf of owner or operators of a CAIR SO2 source or a CAIR SO2 unit only if the submission has been made, signed, and certified in accordance with paragraph (A)(5)(a) of this rule.

(B) Alternate CAIR designated representative.

(1) A certificate of representation under paragraph (D) of this rule may designate one and only one alternate CAIR designated representative, who may act on behalf of the CAIR designated representative. The agreement by which the alternate CAIR designated representative is selected shall include a procedure for authorizing the alternate CAIR designated representative to act in lieu of the CAIR designated representative.

(2) Upon receipt by the administrator of a complete certificate of representation under paragraph (D) of this rule, any representation, action, inaction, or submission by the alternate CAIR designated representative shall be deemed to be a representation, action, inaction, or submission by the CAIR designated representative.

(3) Except in paragraph (B) of this rule and paragraph (B) of rule 3745-109-01 of the Administrative Code, paragraphs (A)(1) and (A)(4), (C), (D), (F) of this rule, paragraph (A) of rule 3745-109-11 of the Administrative Code and paragraph (C) of rule 3745-109-14 of the Administrative Code, whenever the term CAIR designated representative is used in rules 3745-109-01 and 3745-109-09 to 3745-109-14 of the Administrative Code, the term shall be construed to include the CAIR designated representative or any alternate CAIR designated representative.

(C) Changing CAIR designated representative and alternate CAIR designated representative; changes in owners and operators.

(1) Changing CAIR designated representative. The CAIR designated representative may be changed at any time upon receipt by the administrator of a superseding complete certificate of representation under paragraph (D) of this rule. Notwithstanding any such change, all representations, actions, inactions, and submissions by the previous CAIR designated representative before the time and

date when the administrator receives the superseding certificate of representation shall be binding on the new CAIR designated representative and the owners and operators of the CAIR SO2 source and the CAIR SO2 units at the source.

(2) Changing alternate CAIR designated representative. The alternate CAIR designated representative may be changed at any time upon receipt by the administrator of a superseding complete certificate of representation under paragraph (D) of this rule. Notwithstanding any such change, all representations, actions, inactions, and submissions by the previous alternate CAIR designated representative before the time and date when the administrator receives the superseding certificate of representation shall be binding on the new alternate CAIR designated representative and the owners and operators of the CAIR SO2 source and the CAIR SO2 units at the source.

(3) Changes in owners and operators.

(a) In the event an owner or operator of a CAIR SO2 source or a CAIR SO2 unit is not included in the list of owners and operators in the certificate of representation under paragraph (D) of this rule, such owner or operator shall be deemed to be subject to and bound by the certificate of representation, the representations, actions, inactions, and submissions of the CAIR designated representative and any alternate CAIR designated representative of the source or unit, and the decisions and orders of the director, the administrator, or a court, as if the owner or operator were included in such list.

(b) Within thirty days following any change in the owners and operators of a CAIR SO2 source or a CAIR SO2 unit, including the addition of a new owner or operator, the CAIR designated representative or any alternate CAIR designated representative shall submit a revision to the certificate of representation under paragraph (D) of this rule amending the list of owners and operators to include the change.

(D) Certificate of representation.

(1) A complete certificate of representation for a CAIR designated representative or an alternate CAIR designated representative shall include the following elements in a format prescribed by the administrator:

(a) Identification of the CAIR SO2 source, and each CAIR SO2 unit at the source, for which the certificate of representation is submitted, including identification and nameplate capacity of each generator served by each such unit.

(b) The name, address, e-mail address (if any), telephone number, and facsimile transmission number (if any) of the CAIR designated representative and any alternate CAIR designated representative.

(c) A list of the owners and operators of the CAIR SO2 source and of each CAIR SO2 unit at the source.

(d) The following certification statements by the CAIR designated representative and any alternate CAIR designated representative:

(i) "I certify that I was selected as the CAIR designated representative or alternate CAIR designated representative, as applicable, by an agreement binding on the owners and operators of the source and each CAIR SO2 unit at the source."

(ii) "I certify that I have all the necessary authority to carry out my duties and responsibilities under the CAIR SO2 trading program on behalf of the owners and operators of the source and of each CAIR SO2 unit at the source and that each such owner and operator shall be fully bound by my representations, actions, inactions, or submissions."

(iii) "I certify that the owners and operators of the source and of each CAIR SO2 unit at the source shall be bound by any order issued to me by the administrator, the director, or a court regarding the source or unit."

(iv) "Where there are multiple holders of a legal or equitable title to, or a leasehold interest in, a CAIR SO2 unit, or where a utility or industrial customer purchases power from a CAIR SO2 unit under a life-of-the-unit, firm power contractual arrangement, I certify that: I have given a written notice of my selection as the 'CAIR designated representative' or 'alternate CAIR designated representative', as applicable, and of the agreement by which I was selected to each owner and operator of the source and of each CAIR SO2 unit at the source; and CAIR SO2 allowances and proceeds of transactions involving CAIR SO2 allowances will be deemed to be held or distributed in proportion to each holder's legal, equitable, leasehold, or contractual reservation or entitlement, except that, if such multiple holders have expressly provided for a different distribution of CAIR SO2 allowances by contract, CAIR SO2 allowances and proceeds of transactions involving CAIR SO2 allowances will be deemed to be held or distributed in accordance with the contract."

(e) The signature of the CAIR designated representative and any alternate CAIR designated representative and the dates signed.

(2) Unless otherwise required by the director or the administrator, documents of agreement referred to in the certificate of representation shall not be submitted to the director or the administrator. Neither the director nor the administrator shall be under any obligation to review or evaluate the sufficiency of such documents, if submitted.

(E) Objections concerning CAIR designated representative.

(1) Once a complete certificate of representation under paragraph (D) of this rule has been submitted and received, the director and the administrator will rely on the certificate of representation unless and until a superseding complete certificate of representation under paragraph (D) of this rule is received by the administrator.

(2) Except as provided in paragraph (C)(1) or (C)(2) of this rule, no objection or other communication submitted to the director or the administrator concerning the authorization, or any representation, action, inaction, or submission, of the CAIR designated representative shall affect any representation, action, inaction, or submission of the CAIR designated representative or the finality of any decision or order by the director or the administrator under the CAIR SO2 trading program.

(3) Neither the director nor the administrator will adjudicate any private legal dispute concerning the authorization or any representation, action, inaction, or submission of any CAIR designated representative, including private legal disputes concerning the proceeds of CAIR SO2 allowance transfers.

(F) Delegation by CAIR designated representative and alternative CAIR designated representative.

(1) A CAIR designated representative may delegate, to one or more natural persons, his or her authority to make an electronic submission to the administrator provided for or required under this part.

(2) An alternate CAIR designated representative may delegate, to one or more natural persons, his or her authority to make an electronic submission to the administrator provided for or required under this part.

(3) In order to delegate authority to make an electronic submission to the administrator in accordance with paragraph (F)(1) or (F)(2) of this rule, the CAIR designated representative or alternate CAIR designated representative, as appropriate, must submit to the administrator a notice of delegation, in a format prescribed by the administrator, that includes the following elements:

(a) The name, address, e-mail address, telephone number, and facsimile transmission number (if any) of such CAIR designated representative or alternate CAIR designated representative.

(b) The name, address, e-mail address, telephone number, and facsimile transmission number (if any) of each such natural person (referred to as an "agent").

(c) For each such natural person, a list of the type or types of electronic submissions under paragraph (F)(1) or (F)(2) of this rule for which authority is delegated to each person.

(d) The following certification statements by such CAIR designated representative or alternate CAIR designated representative:

(i) "I agree that any electronic submission to the administrator that is by an agent identified in this notice of delegation and of a type listed for such agent in this notice of delegation and that is made when I am a CAIR designated representative or alternate CAIR designated representative, as appropriate, and before this notice of delegation is superseded by another notice of delegation under 40 CFR 96.215(d) shall be deemed to be an electronic submission by me."

(ii) "Until this notice of delegation is superseded by another notice of delegation under 40 CFR 96.215(d), I agree to maintain an e-mail account and to notify the administrator immediately of any change in my e-mail address unless all delegation of authority by me under 40 CFR 96.215 is terminated."

(4) A notice of delegation submitted under paragraph (F)(3) of this rule shall be effective, with regard to the CAIR designated representative or alternate CAIR designated representative identified in such notice, upon receipt of such notice by the administrator and until receipt by the administrator of a superseding notice of delegation submitted by such CAIR designated representative or alternate CAIR designated representative, as appropriate. The superseding notice of delegation may replace any previously identified agent, add a new agent, or eliminate entirely any delegation of authority.

(5) Any electronic submission covered by the certification in paragraph (3)(d)(i) of this rule and made in accordance with a notice of delegation effective under paragraph (F)(4) of this rule shall be deemed to be an electronic submission by the CAIR designated representative or alternate CAIR designated representative submitting such notice of delegation.

Effective: 11/14/2013

R.C. 119.032 review dates: 08/29/2013 and 11/14/2018

CERTIFIED ELECTRONICALLY
Certification

11/04/2013
Date

Promulgated Under: 119.03
Statutory Authority: 3704.03(E)
Rule Amplifies: 3704.03(A), 3704.03(E), 3704.03(V)
Prior Effective Dates: 09/27/07

3745-109-10 **CAIR SO2 source permits.**

[Comment: For dates of non-regulatory government publications, publications of recognized organizations and associations, federal rules, and federal statutory provisions referenced in this rule, see paragraph (H) of rule 3745-109-01 of the Administrative Code titled "Referenced materials."]

(A) General CAIR trading program permit requirements.

(1) For each CAIR SO2 source required to have a Title V operating permit or required, under rule 3745-109-14 of the Administrative Code, to have a Title V operating permit or other federally enforceable permit, such permit shall include a CAIR permit administered by the director for the Title V operating permit or the federally enforceable permit as applicable. The CAIR portion of the Title V permit or other federally enforceable permit as applicable shall be administered in accordance with the director's Title V operating permits regulations promulgated under 40 CFR Parts 70 or 71 or the director's regulations for other federally enforceable permits as applicable, except as provided otherwise by paragraph (D) of rule 3745-109-01 of the Administrative Code, this rule and rule 3745-109-14 of the Administrative Code.

(2) Each CAIR permit shall contain, with regard to the CAIR SO2 source and the CAIR SO2 units at the source covered by the CAIR permit, all applicable CAIR SO2 trading program, CAIR NOx annual trading program, and CAIR NOx ozone season trading program requirements and shall be a complete and separable portion of the Title V operating permit or other federally enforceable permit under paragraph (A)(1) of this rule.

(B) Submission of CAIR permit applications.

(1) Duty to apply. The CAIR designated representative of any CAIR SO2 source required to have a Title V operating permit shall submit to the director a complete CAIR permit application under paragraph (C) of this rule for the source covering each CAIR SO2 unit at the source at least eighteen months (or such lesser time provided by the director) before the later of January 1, 2010 or the date on which the CAIR SO2 unit commences commercial operation, except as provided in paragraph (D)(1) of rule 3745-109-14 of the Administrative Code.

(2) Duty to Reapply. For a CAIR SO2 source required to have a Title V operating permit, the CAIR designated representative shall submit a complete CAIR permit application under paragraph (C) of this rule for the source covering each CAIR SO2 unit at the source to renew the CAIR permit in accordance with the director's Title V operating permits regulations addressing permit renewal,

except as provided in paragraph (D)(2) of rule 3745-109-14 of the Administrative Code.

(C) Information requirements for CAIR permit applications.

A complete CAIR permit application shall include the following elements concerning the CAIR SO2 source for which the application is submitted, in a format prescribed by the director:

(1) Identification of the CAIR SO2 source.

(2) Identification of each CAIR SO2 unit at the CAIR SO2 source.

(3) The standard requirements under paragraph (E) of rule 3745-109-01 of the Administrative Code.

(D) CAIR permit contents and term.

(1) Each CAIR permit shall contain, in a format prescribed by the director, all elements required for a complete CAIR permit application under paragraph (C) of this rule.

(2) Each CAIR permit is deemed to incorporate automatically the definitions of terms under paragraph (B) of rule 3745-109-01 of the Administrative Code and, upon recordation by the administrator under rules 3745-109-11, 3745-109-12 or 3745-109-14 of the Administrative Code, every allocation, transfer, or deduction of a CAIR SO2 allowance to or from the compliance account of the CAIR SO2 source covered by the permit.

(3) The term of the CAIR permit shall be set by the director, as necessary to facilitate coordination of the renewal of the CAIR permit with issuance, revision, or renewal of the CAIR SO2 source's Title V operating permit or other federally enforceable permit as applicable.

(E) CAIR permit revisions.

Except as provided in paragraph (D)(2) of this rule, the director shall revise the CAIR permit, as necessary, in accordance with the director's Title V operating permits regulations or the director's regulations for other federally enforceable permits as applicable addressing permit revisions.

Effective: 11/14/2013

R.C. 119.032 review dates: 08/29/2013 and 11/14/2018

CERTIFIED ELECTRONICALLY
Certification

11/04/2013
Date

Promulgated Under: 119.03
Statutory Authority: 3704.03(E)
Rule Amplifies: 3704.03(A), 3704.03(E), 3704.03(V)
Prior Effective Dates: 09/27/07

3745-109-11 **CAIR SO2 allowance tracking system.**

[Comment: For dates of non-regulatory government publications, publications of recognized organizations and associations, federal rules, and federal statutory provisions referenced in this rule, see paragraph (H) of rule 3745-109-01 of the Administrative Code titled "Referenced materials."]

(A) Establishment of accounts.

(1) Compliance accounts. Except as provided in paragraph (E)(5) of rule 3745-109-14 of the Administrative Code, upon receipt of a complete certificate of representation under paragraph (D) of rule 3745-109-09 of the Administrative Code, the administrator shall establish a compliance account for the CAIR SO2 source for which the certificate of representation was submitted, unless the source already has a compliance account.

(2) General accounts.

(a) Application for general account.

(i) Any person may apply to open a general account for the purpose of holding and transferring CAIR SO2 allowances. An application for a general account may designate one and only one CAIR authorized account representative and one and only one alternate CAIR authorized account representative who may act on behalf of the CAIR authorized account representative. The agreement by which the alternate CAIR authorized account representative is selected shall include a procedure for authorizing the alternate CAIR authorized account representative to act in lieu of the CAIR authorized account representative.

(ii) A complete application for a general account shall be submitted to the administrator and shall include the following elements in a format prescribed by the administrator:

(a) Name, mailing address, e-mail address (if any), telephone number, and facsimile transmission number (if any) of the CAIR authorized account representative and any alternate CAIR authorized account representative.

(b) Organization name and type of organization, if applicable.

(c) A list of all persons subject to a binding agreement for the CAIR authorized account representative and any alternate CAIR authorized account representative to represent their ownership

interest with respect to the CAIR SO2 allowances held in the general account.

(d) The following certification statement by the CAIR authorized account representative and any alternate CAIR authorized account representative: "I certify that I was selected as the CAIR authorized account representative or the alternate CAIR authorized account representative, as applicable, by an agreement that is binding on all persons who have an ownership interest with respect to CAIR SO2 allowances held in the general account. I certify that I have all the necessary authority to carry out my duties and responsibilities under the CAIR SO2 trading program on behalf of such persons and that each such person shall be fully bound by my representations, actions, inactions, or submissions and by any order or decision issued to me by the administrator or a court regarding the general account."

(e) The signature of the CAIR authorized account representative and any alternate CAIR authorized account representative and the dates signed.

(iii) Unless otherwise required by the director or the administrator, documents of agreement referred to in the application for a general account shall not be submitted to the director or the administrator. Neither the director nor the administrator shall be under any obligation to review or evaluate the sufficiency of such documents, if submitted.

(iv) Authorization of CAIR authorized account representative and alternate CAIR authorized account representative.

(a) Upon receipt by the administrator of a complete application for a general account under paragraph (A)(2)(a) of this rule:

(i) The administrator shall establish a general account for the person or persons for whom the application is submitted.

(ii) The CAIR authorized account representative and any alternate CAIR authorized account representative for the general account shall represent and, by his or her representations, actions, inactions, or submissions, legally bind each person who has an ownership interest with respect to CAIR SO2 allowances held in the general account in all matters pertaining to the CAIR SO2 trading program, notwithstanding any agreement between the CAIR authorized account representative or any alternate CAIR authorized account representative and such person. Any such person shall be

bound by any order or decision issued to the CAIR authorized account representative or any alternate CAIR authorized account representative by the administrator or a court regarding the general account.

(iii) Any representation, action, inaction, or submission by any alternate CAIR authorized account representative shall be deemed to be a representation, action, inaction, or submission by the CAIR authorized account representative.

(b) Each submission concerning the general account shall be submitted, signed, and certified by the CAIR authorized account representative or any alternate CAIR authorized account representative for the persons having an ownership interest with respect to CAIR SO2 allowances held in the general account. Each such submission shall include the following certification statement by the CAIR authorized account representative or any alternate CAIR authorized account representative: "I am authorized to make this submission on behalf of the persons having an ownership interest with respect to the CAIR SO2 allowances held in the general account. I certify under penalty of law that I have personally examined, and am familiar with, the statements and information submitted in this document and all its attachments. Based on my inquiry of those individuals with primary responsibility for obtaining the information, I certify that the statements and information are to the best of my knowledge and belief true, accurate, and complete. I am aware that there are significant penalties for submitting false statements and information or omitting required statements and information, including the possibility of fine or imprisonment."

(c) The administrator shall accept or act on a submission concerning the general account only if the submission has been made, signed, and certified in accordance with paragraph (A)(2)(b)(ii) of this rule.

(v) Changing CAIR authorized account representative, alternate CAIR authorized account representative and changes in persons with ownership interest.

(a) The CAIR authorized account representative for a general account may be changed at any time upon receipt by the administrator of a superseding complete application for a general account under paragraph (A)(2)(a) of this rule. Notwithstanding any such change, all representations, actions, inactions, and submissions by the previous CAIR authorized account representative before the time and date when the administrator receives the superseding

application for a general account shall be binding on the new CAIR authorized account representative and the persons with an ownership interest with respect to the CAIR SO2 allowances in the general account.

(b) The alternate CAIR authorized account representative for a general account may be changed at any time upon receipt by the administrator of a superseding complete application for a general account under paragraph (A)(2)(a) of this rule. Notwithstanding any such change, all representations, actions, inactions, and submissions by the previous alternate CAIR authorized account representative before the time and date when the administrator receives the superseding application for a general account shall be binding on the new alternate CAIR authorized account representative and the persons with an ownership interest with respect to the CAIR SO2 allowances in the general account.

(c) For changes in ownership interests:

(i) In the event a person having an ownership interest with respect to CAIR SO2 allowances in the general account is not included in the list of such persons in the application for a general account, such person shall be deemed to be subject to and bound by the application for a general account, the representation, actions, inactions, and submissions of the CAIR authorized account representative and any alternate CAIR authorized account representative of the account, and the decisions and orders of the administrator or a court, as if the person were included in such list.

(ii) Within thirty days following any change in the persons having an ownership interest with respect to CAIR SO2 allowances in the general account, including the addition of a new person, the CAIR authorized account representative or any alternate CAIR authorized account representative shall submit a revision to the application for a general account amending the list of persons having an ownership interest with respect to the CAIR SO2 allowances in the general account to include the change.

(vi) Objections concerning CAIR authorized account representative and alternate CAIR authorized account representative.

(a) Once a complete application for a general account under paragraph (A)(2)(a) of this rule has been submitted and received, the administrator shall rely on the application unless and until a

superseding complete application for a general account under paragraph (A)(2)(a) of this rule is received by the administrator.

(b) Except as provided in paragraph (A)(2)(c)(i) or (A)(2)(c)(ii) of this rule, no objection or other communication submitted to the administrator concerning the authorization, or any representation, action, inaction, or submission of the CAIR authorized account representative or any alternate CAIR authorized account representative for a general account shall affect any representation, action, inaction, or submission of the CAIR authorized account representative or any alternate CAIR authorized account representative or the finality of any decision or order by the administrator under the CAIR SO2 trading program.

(c) The administrator shall not adjudicate any private legal dispute concerning the authorization or any representation, action, inaction, or submission of the CAIR authorized account representative or any alternate CAIR authorized account representative for a general account, including private legal disputes concerning the proceeds of CAIR SO2 allowance transfers.

(vii) Delegation by CAIR authorized account representative and alternate CAIR authorized account representative.

(a) A CAIR authorized account representative may delegate, to one or more natural persons, his or her authority to make an electronic submission to the administrator provided for or required under rules 3745-109-11 and 3745-109-12 of the Administrative Code.

(b) An alternate CAIR authorized account representative may delegate, to one or more natural persons, his or her authority to make an electronic submission to the administrator provided for or required under rules 3745-109-11 and 3745-109-12 of the Administrative Code.

(c) In order to delegate authority to make an electronic submission to the administrator in accordance with paragraph (A)(2)(a)(vii)(a) or (A)(2)(a)(vii)(b) of this rule, the CAIR authorized account representative or alternate CAIR authorized account representative, as appropriate, must submit to the administrator a notice of delegation, in a format prescribed by the administrator, that includes the following elements:

(i) The name, address, e-mail address, telephone number, and facsimile transmission number (if any) of such CAIR

authorized account representative or alternate CAIR authorized account representative.

(ii) The name, address, e-mail address, telephone number, and, facsimile transmission number (if any) of each such natural person (referred to as an "agent").

(iii) For each such natural person, a list of the type or types of electronic submissions under paragraph (A)(2)(a)(vii)(a) or (A)(2)(a)(vii)(b) of this rule for which authority is delegated to each person.

(iv) The following certification statement by such CAIR authorized account representative or alternate CAIR authorized account representative: "I agree that any electronic submission to the administrator that is by an agent identified in this notice of delegation and of a type listed for such agent in this notice of delegation and that is made when I am a CAIR authorized account representative or alternate CAIR authorized representative, as appropriate, and before this notice of delegation is superseded by another notice of delegation under paragraph (A)(2)(vii)(d) of rule 3745-109-11 of the Administrative Code rule shall be deemed to be an electronic submission by me."

(v) The following certification statement by such CAIR authorized account representative or alternate CAIR authorized account representative: "Until this notice of delegation is superseded by another notice of delegation under paragraph (A)(2)(vii)(d) of rule 3745-109-11 of the Administrative Code, I agree to maintain an e-mail account and to notify the administrator immediately of any change in my e-mail address, unless all delegation of authority by me under paragraph (A)(2)(vii) of rule 3745-109-11 of the Administrative Code is terminated."

(d) A notice of delegation submitted under paragraph (A)(2)(vii)(c) of this rule shall be effective, with regard to the CAIR authorized account representative or alternate CAIR authorized account representative identified in such notice, upon receipt of such notice by the administrator and until receipt by the administrator of a superseding notice of delegation submitted by such CAIR authorized account representative or alternate CAIR authorized account representative, as appropriate. The superseding notice of delegation may replace any previously identified agent, add a new agent, or eliminate entirely any delegation of authority.

(e) Any electronic submission covered by the certification in paragraph (A)(2)(vii)(c)(iv) of this rule and made in accordance with a notice of delegation effective under paragraph (A)(2)(vii)(d) of this rule shall be deemed to be an electronic submission by the CAIR designated representative or alternate CAIR designated representative submitting such notice of delegation.

(3) Account identification. The administrator shall assign a unique identifying number to each account established under paragraph (A)(1) or (A)(2) of this rule.

(B) Responsibilities of CAIR authorized account representative.

Following the establishment of a CAIR SO2 allowance tracking system account, all submissions to the administrator pertaining to the account, including, but not limited to, submissions concerning the deduction or transfer of CAIR SO2 allowances in the account, shall be made only by the CAIR authorized account representative for the account.

(C) Recordation of CAIR SO2 allowances.

(1) Recordation for compliance accounts.

(a) After a compliance account is established under paragraph (A)(1) of this rule or 40 CFR 73.31(a) or (b), the administrator shall record in the compliance account any CAIR SO2 allowance allocated to any CAIR SO2 unit at the source for each of the thirty years starting the later of 2010 or the year in which the compliance account is established and any CAIR SO2 allowance allocated for each of the thirty years starting the later of 2010 or the year in which the compliance account is established and transferred to the source in accordance with rule 3745-109-12 of the Administrative Code or 40 CFR Part 73.

(b) In 2011 and each year thereafter, after the administrator has completed all deductions under paragraph (C)(2) of this rule, the administrator shall record in the compliance account any CAIR SO2 allowance allocated to any CAIR SO2 unit at the source, for the new thirtieth year (i.e., the year that is thirty years after the calendar year for which such deductions are or could be made) and any CAIR SO2 allowance allocated for the new thirtieth year and transferred to the source in accordance with rule 3745-109-12 of the Administrative Code or 40 CFR Part 73, Subpart D.

(2) Recordation for general accounts.

(a) After a general account is established under paragraph (A)(2) of this rule or 40 CFR 73.31(c), the administrator shall record in the general account any

CAIR SO2 allowance allocated for each of the thirty years starting the later of 2010 or the year in which the general account is established and transferred to the general account in accordance with rule 3745-109-12 of the Administrative Code or 40 CFR Part 73, Subpart D.

(b) In 2011 and each year thereafter, after administrator has completed all deductions under paragraph (A)(2) of this rule, the administrator shall record in the general account any CAIR SO2 allowance allocated for the new thirtieth year (i.e., the year that is thirty years after the calendar year for which such deductions are or could be made) and transferred to the general account in accordance with rule 3745-109-12 of the Administrative Code or 40 CFR Part 73, Subpart D.

(3) Serial numbers for allocated CAIR SO2 allowances. When recording the allocation of CAIR SO2 allowances issued by a director under paragraph (I) of rule 3745-109-14 of the Administrative Code, the administrator shall assign each such CAIR SO2 allowance a unique identification number that shall include digits identifying the year of the control period for which the CAIR SO2 allowance is allocated.

(D) Compliance with CAIR SO2 emissions limitation.

(1) Allowance transfer deadline. The CAIR SO2 allowances are available to be deducted for compliance with a source's CAIR SO2 emissions limitation for a control period in a given calendar year only if the CAIR SO2 allowances conform to the following:

(a) Were allocated for the control period in the year or a prior year.

(b) Are held in the compliance account as of the allowance transfer deadline for the control period or are transferred into the compliance account by a CAIR SO2 allowance transfer correctly submitted for recordation under paragraphs (A) and (B) of rule 3745-109-12 of the Administrative Code by the allowance transfer deadline for the control period.

(2) Deductions for compliance. Following the recordation, in accordance with paragraph (B) of rule 3745-109-12 of the Administrative Code, of CAIR SO2 allowance transfers submitted for recordation in a source's compliance account by the allowance transfer deadline for a control period, the administrator shall deduct from the compliance account CAIR SO2 allowances available under paragraph (D)(1) of this rule in order to determine whether the source meets the CAIR SO2 emissions limitation for the control period as follows:

(a) For a CAIR SO2 source subject to an acid rain emissions limitation, the administrator will, in the following order:

(i) Deduct the amount of CAIR SO2 allowances, available under paragraph (D)(1) of this rule and not issued by the director under paragraph (I) of rule 3745-109-14 of the Administrative Code, that is required under 40 CFR 73.35 (b) and (c). If there are sufficient CAIR SO2 allowances to complete this deduction, the deduction shall be treated as satisfying the requirements of 40 CFR 73.35 (b) and (c).

(ii) Deduct the amount of CAIR SO2 allowances, not issued by the director under paragraph (I) of rule 3745-109-14 of the Administrative Code, that is required under 40 CFR 73.35 (d) and 40 CFR 77.5. If there are sufficient CAIR SO2 allowances to complete this deduction, the deduction shall be treated as satisfying the requirements of 40 CFR 73.35 (d) and 40 CFR 77.5.

(iii) Treating the CAIR SO2 allowances deducted under paragraph (D)(2)(a)(i) of this rule as also being deducted under this paragraph (D)(2)(a)(iii) of this rule, deduct CAIR SO2 allowances available under paragraph (D)(1) of this rule (including any issued by the director under paragraph (I) of rule 3745-109-14 of the Administrative Code) in order to determine whether the source meets the CAIR SO2 emissions limitation for the control period, as follows:

(a) Until the tonnage equivalent of the CAIR SO2 allowances deducted equals, or exceeds in accordance with paragraphs (D)(3)(a) and (D)(3)(b) of this rule, the number of tons of total SO2 emissions, determined in accordance with rule 3745-109-13 of the Administrative Code, from all CAIR SO2 units at the source for the control period.

(b) If there are insufficient CAIR SO2 allowances to complete the deductions in paragraph (D)(2)(a)(iii)(a) of this rule, until no more CAIR SO2 allowances available under paragraph (D)(1) of this rule (including any issued by the director under paragraph (I) of rule 3745-109-14 of the Administrative Code) remain in the compliance account.

(b) For a CAIR SO2 source not subject to an acid rain emissions limitation, the administrator shall deduct CAIR SO2 allowances available under paragraph (D)(1) of this rule (including any issued by the director under paragraph (I) of rule 3745-109-14 of the Administrative Code) in order to determine whether the source meets the CAIR SO2 emissions limitation for the control period, as follows:

(i) Until the tonnage equivalent of the CAIR SO2 allowances deducted equals, or exceeds in accordance with paragraphs (D)(3)(a) and (D)(3)(b) of this rule, the number of tons of total SO2 emissions,

determined in accordance with rule 3745-109-13 of the Administrative Code, from all CAIR SO2 units at the source for the control period.

(ii) If there are insufficient CAIR SO2 allowances to complete the deductions in paragraph (D)(2)(b)(i) of this rule, until no more CAIR SO2 allowances available under paragraph (D)(1) of this rule (including those issued by the director under paragraph (I) of rule 3745-109-14 of the Administrative Code) remain in the compliance account.

(3) Identification of CAIR SO2 allowances by serial number.

(a) Identification of CAIR SO2 allowances by serial number. The CAIR authorized account representative for a source's compliance account may request that specific CAIR SO2 allowances, identified by serial number, in the compliance account be deducted for emissions or excess emissions for a control period in accordance with paragraph (D)(2) or (D)(4) of this rule. Such request shall be submitted to the administrator by the allowance transfer deadline for the control period and include, in a format prescribed by the administrator, the identification of the CAIR SO2 source and the appropriate serial numbers.

(b) First-in, first-out. The administrator shall deduct CAIR SO2 allowances under paragraph (D)(2) or (D)(4) of this rule from the source's compliance account, in the absence of an identification or in the case of a partial identification of CAIR SO2 allowances by serial number under paragraph (D)(3)(a) of rule 3745-109-11 of the Administrative Code, on a first-in, first-out (FIFO) accounting basis in the following order:

(i) Any CAIR SO2 allowances that were allocated to the units at the source for a control period before 2010, in the order of recordation.

(ii) Any CAIR SO2 allowances that were allocated to any entity for a control period before 2010 and transferred and recorded in the compliance account pursuant to rule 3745-109-12 of the Administrative Code or 40 CFR Part 73, Subpart D, in the order of recordation.

(iii) Any CAIR SO2 allowances that were allocated to the units at the source for a control period during 2010 through 2014, in the order of recordation.

(iv) Any CAIR SO2 allowances that were allocated to any entity for a control period during 2010 through 2014 and transferred and recorded in the compliance account pursuant to rule 3745-109-12 of the Administrative Code or 40 CFR Part 73, Subpart D, in the order of recordation.

(v) Any CAIR SO2 allowances that were allocated to the units at the source for a control period in 2015 or later, in the order of recordation.

(vi) Any CAIR SO2 allowances that were allocated to any entity for a control period in 2015 or later and transferred and recorded in the compliance account pursuant to rule 3745-109-12 of the Administrative Code or 40 CFR Part 73, Subpart D, in the order of recordation.

(4) Deductions for excess emissions.

(a) After making the deductions for compliance under paragraph (D)(2) of this rule for a control period in a calendar year in which the CAIR SO2 source has excess emissions, the administrator shall deduct from the source's compliance account the tonnage equivalent in CAIR SO2 allowances, allocated for the control period in the immediately following calendar year (including any issued by the director under paragraph (I) of rule 3745-109-14 of the Administrative Code), equal to, or exceeding in accordance with paragraphs (D)(3)(a) and (D)(3)(b) of this rule, three times the following amount: the number of tons of the source's excess emissions minus, if the source is subject to an acid rain emissions limitation, the amount of the CAIR SO2 allowances required to be deducted under paragraph (D)(2)(a)(ii) of this rule.

(b) Any allowance deduction required under paragraph (D)(4)(a) of this rule shall not affect the liability of the owners and operators of the CAIR SO2 source or the CAIR SO2 units at the source for any fine, penalty, or assessment, or their obligation to comply with any other remedy, for the same violations, as ordered under the Clean Air Act or applicable state law.

(5) Recordation of deductions. The administrator shall record in the appropriate compliance account all deductions from such an account under paragraphs (D)(2) and (D)(4) of this rule and rule 3745-109-14 of the Administrative Code.

(6) Administrator's action on submissions.

(a) The administrator may review and conduct independent audits concerning any submission under the CAIR SO2 trading program and make appropriate adjustments of the information in the submissions.

(b) The administrator may deduct CAIR SO2 allowances from or transfer CAIR SO2 allowances to a source's compliance account based on the information in the submissions, as adjusted under paragraph (D)(5)(a) of this rule, and record such deductions and transfers.

(E) Banking.

(1) CAIR SO2 allowances may be banked for future use or transfer in a compliance account or a general account in accordance with paragraph (E)(2) of rule 3745-109-12 of the Administrative Code.

(2) Any CAIR SO2 allowance that is held in a compliance account or a general account shall remain in such account unless and until the CAIR SO2 allowance is deducted or transferred under paragraph (D) or (F) of this rule, or rule 3745-109-12 or 3745-109-14 of the Administrative Code.

(F) Account error.

The administrator may, at the administrator's sole discretion and on his or her own motion, correct any error in any CAIR SO2 allowance tracking system account. Within ten business days of making such correction, the administrator shall notify the CAIR authorized account representative for the account.

(G) Closing of general accounts.

(1) The CAIR authorized account representative of a general account may submit to the administrator a request to close the account, which shall include a correctly submitted allowance transfer under paragraphs (A) and (B) of rule 3745-109-12 of the Administrative Code for any CAIR SO2 allowances in the account to one or more other CAIR SO2 allowance tracking system accounts.

(2) If a general account has no allowance transfers in or out of the account for a twelve-month period or longer and does not contain any CAIR SO2 allowances, the administrator may notify the CAIR authorized account representative for the account that the account shall be closed following twenty business days after the notice is sent. The account shall be closed after the twenty-day period unless, before the end of the twenty-day period, the administrator receives a correctly submitted transfer of CAIR SO2 allowances into the account under paragraphs (A) and (B) of rule 3745-109-12 of the Administrative Code or a statement submitted by the CAIR authorized account representative demonstrating to the satisfaction of the administrator good cause as to why the account should not be closed.

Effective: 11/14/2013

R.C. 119.032 review dates: 08/29/2013 and 11/14/2018

CERTIFIED ELECTRONICALLY
Certification

11/04/2013
Date

Promulgated Under: 119.03
Statutory Authority: 3704.03(E)
Rule Amplifies: 3704.03(A), 3704.03(E), 3704.03(V)
Prior Effective Dates: 09/27/07, 07/16/09

3745-109-12 **CAIR SO2 allowance transfers.**

[Comment: For dates of non-regulatory government publications, publications of recognized organizations and associations, federal rules, and federal statutory provisions referenced in this rule, see paragraph (H) of rule 3745-109-01 of the Administrative Code titled "Referenced materials."]

(A) Submission of CAIR SO2 allowance transfers.

(1) A CAIR authorized account representative seeking recordation of a CAIR SO2 allowance transfer shall submit the transfer to the administrator. To be considered correctly submitted, the CAIR SO2 allowance transfer shall include the following elements, in a format specified by the administrator:

(a) The account numbers of both the transferor and transferee accounts.

(b) The serial number of each CAIR SO2 allowance that is in the transferor account and is to be transferred.

(c) The name and signature of the CAIR authorized account representatives of the transferor and transferee accounts and the dates signed:

(i) The CAIR authorized account representative for the transferee account can paragraph (A)(1)(c) of this rule by submitting, in a format prescribed by the administrator, a statement signed by the CAIR authorized account representative and identifying each account into which any transfer of allowances, submitted on or after the date on which the administrator receives such statement, is authorized. Such authorization shall be binding on any CAIR authorized account representative for such account and shall apply to all transfers into the account that are submitted on or after such date of receipt, unless and until the administrator receives a statement signed by the CAIR authorized account representative retracting the authorization for the account.

(ii) The statement under paragraph (A)(1)(c)(i) of this rule shall include the following: "By this signature I authorize any transfer of allowances into each account listed herein, except that I do not waive any remedies under state or federal law to obtain correction of any erroneous transfers into such accounts. This authorization shall be binding on any CAIR authorized account representative for such account unless and until a statement signed by the CAIR authorized account representative retracting this authorization for the account is received by the administrator."

(B) EPA recordation.

(1) Within five business days (except as necessary to perform a transfer in perpetuity of CAIR SO2 allowances allocated to a CAIR SO2 unit or as provided in paragraph (B)(2) of this rule) of receiving a CAIR SO2 allowance transfer, the administrator shall record a CAIR SO2 allowance transfer by moving each CAIR SO2 allowance from the transferor account to the transferee account as specified by the request, provided the following:

(a) The transfer is correctly submitted under paragraph (A) of this rule.

(b) The transferor account includes each CAIR SO2 allowance identified by serial number in the transfer.

(c) The transfer is in accordance with the limitation on transfer under 40 CFR 74.42 and 40 CFR 74.47(c), as applicable.

(2) A CAIR SO2 allowance transfer that is submitted for recordation after the allowance transfer deadline for a control period and that includes any CAIR SO2 allowances allocated for any control period before such allowance transfer deadline shall not be recorded until after the administrator completes the deductions under paragraph (C) of rule 3745-109-11 of the Administrative Code for the control period immediately before such allowance transfer deadline.

(3) Where a CAIR SO2 allowance transfer submitted for recordation fails to meet the requirements of paragraph (B)(1) of this rule, the administrator shall not record such transfer.

(C) Notification.

(1) Notification of recordation. Within five business days of recordation of a CAIR SO2 allowance transfer under paragraph (B) of this rule, the administrator shall notify the CAIR authorized account representatives of both the transferor and transferee accounts.

(2) Notification of non-recordation. Within ten business days of receipt of a CAIR SO2 allowance transfer that fails to meet the requirements of paragraph (B)(1) of this rule, the administrator shall notify the CAIR authorized account representatives of both accounts subject to the transfer of the following:

(a) A decision not to record the transfer.

(b) The reasons for such non-recordation.

(3) Nothing in this paragraph shall preclude the submission of a CAIR SO2 allowance transfer for recordation following notification of non-recordation.

Effective: 11/14/2013

R.C. 119.032 review dates: 08/29/2013 and 11/14/2018

CERTIFIED ELECTRONICALLY
Certification

11/04/2013
Date

Promulgated Under: 119.03
Statutory Authority: 3704.03(E)
Rule Amplifies: 3704.03(A), 3704.03(E), 3704.03(V)
Prior Effective Dates: 09/27/07, 07/16/09

3745-109-13 **CAIR SO2 unit monitoring and reporting.**

[Comment: For dates of non-regulatory government publications, publications of recognized organizations and associations, federal rules, and federal statutory provisions referenced in this rule, see paragraph (H) of rule 3745-109-01 of the Administrative Code titled "Referenced materials."]

(A) Monitoring and reporting general requirements.

The owners and operators, and to the extent applicable, the CAIR designated representative, of a CAIR SO2 unit, shall comply with the monitoring, record keeping, and reporting requirements as provided in this rule and in 40 CFR Part 75, Subparts F and G. For purposes of complying with such requirements, the definitions in paragraph (B) of rule 3745-109-01 of the Administrative Code and in 40 CFR 72.2 shall apply, and the terms affected unit, designated representative, and continuous emission monitoring system (or CEMS) in 40 CFR Part 75 shall be deemed to refer to the terms CAIR SO2 unit, CAIR designated representative, and continuous emission monitoring system (or CEMS) respectively, as defined in paragraph (B) of rule 3745-109-01 of the Administrative Code. The owner or operator of a unit that is not a CAIR SO2 unit but that is monitored under 40 CFR 75.16(b)(2) shall comply with the same monitoring, record keeping, and reporting requirements as a CAIR SO2 unit.

(1) Requirements for installation, certification, and data accounting. The owner or operator of each CAIR SO2 unit shall do the following:

(a) Install all monitoring systems required under this rule for monitoring SO2 mass emissions and individual unit heat input (including all systems required to monitor SO2 concentration, stack gas moisture content, stack gas flow rate, CO2 or O2 concentration, and fuel flow rate, as applicable, in accordance with 40 CFR 75.11 and 40 CFR 75.16).

(b) Successfully complete all certification tests required under paragraph (B) of this rule and meet all other requirements of this rule and 40 CFR Part 75 applicable to the monitoring systems under paragraph (A)(1)(a) of this rule.

(c) Record, report, and quality-assure the data from the monitoring systems under paragraph (A)(1)(a) of this rule.

(2) Compliance deadlines. Except as provided in paragraph (A)(5) of this rule, the owner or operator shall meet the monitoring system certification and other requirements of paragraphs (A)(1)(a) and (A)(1)(b) of this rule on or before the following dates. The owner or operator shall record, report, and quality-assure the data from the monitoring systems under paragraph (A)(1)(a) of this rule on and after the following dates:

(a) For the owner or operator of a CAIR SO2 unit that commences commercial operation before July 1, 2008, by January 1, 2009.

(b) For the owner or operator of a CAIR SO2 unit that commences commercial operation on or after July 1, 2008, by the later of the following dates:

(i) January 1, 2009.

(ii) Ninety unit operating days or one hundred eighty calendar days, whichever occurs first, after the date on which the unit commences commercial operation.

(c) For the owner or operator of a CAIR SO2 unit for which construction of a new stack or flue or installation of add-on SO2 emission controls is completed after the applicable deadline under paragraphs (A)(2)(a) to (A)(2)(e) of this rule, by ninety unit operating days or one hundred eighty calendar days, whichever occurs first, after the date on which emissions first exit to the atmosphere through the new stack or flue or add-on SO2 emissions controls.

(d) Notwithstanding the dates in paragraphs (A)(2)(a) and (A)(2)(b) of this rule, for the owner or operator of a unit for which a CAIR opt-in permit application is submitted and not withdrawn and a CAIR opt-in permit is not yet issued or denied under rule 3745-109-14 of the Administrative Code, by the date specified in paragraph (E)(2) of rule 3745-109-14 of the Administrative Code.

(e) Notwithstanding the dates in paragraphs (A)(2)(a) and (A)(2)(b) of this rule, for the owner or operator of a CAIR SO2 opt-in unit under rule 3745-109-14 of the Administrative Code, by the date on which the CAIR SO2 opt-in unit enters the CAIR SO2 trading program as provided in paragraph (E)(8) of rule 3745-109-14 of the Administrative Code.

(3) Reporting data.

The owner or operator of a CAIR SO2 unit that does not meet the applicable compliance date set forth in paragraph (A)(2) of this rule for any monitoring system under paragraph (A)(1)(a) of this rule shall, for each such monitoring system, determine, record, and report maximum potential (or, as appropriate, minimum potential) values for SO2 concentration, stack gas flow rate, stack gas moisture content, fuel flow rate, and any other parameters required to determine SO2 mass emissions and heat input in accordance with 40 CFR 75.31(b)(2) or 40 CFR 75.31(c)(3) or 40 CFR Part 75, Appendix D, Section 2.4, as applicable.

(4) Prohibitions.

(a) No owner or operator of a CAIR SO2 unit shall use any alternative monitoring system, alternative reference method, or any other alternative to any requirement of this rule without having obtained prior written approval in accordance with paragraph (F) of this rule.

(b) No owner or operator of a CAIR SO2 unit shall operate the unit so as to discharge, or allow to be discharged, SO2 emissions to the atmosphere without accounting for all such emissions in accordance with the applicable provisions of this rule and 40 CFR Part 75.

(c) No owner or operator of a CAIR SO2 unit shall disrupt the continuous emission monitoring system, any portion thereof, or any other approved emission monitoring method, and thereby avoid monitoring and recording SO2 mass emissions discharged into the atmosphere or heat input, except for periods of recertification or periods when calibration, quality assurance testing, or maintenance is performed in accordance with the applicable provisions of this rule and 40 CFR Part 75.

(d) No owner or operator of a CAIR SO2 unit shall retire or permanently discontinue use of the continuous emission monitoring system, any component thereof, or any other approved monitoring system under this rule, except under any one of the following circumstances:

(i) During the period that the unit is covered by an exemption under paragraph (D) of rule 3745-109-01 of the Administrative Code that is in effect.

(ii) The owner or operator is monitoring emissions from the unit with another certified monitoring system approved, in accordance with the applicable provisions of this rule and 40 CFR Part 75, by the director for use at that unit that provides emission data for the same pollutant or parameter as the retired or discontinued monitoring system.

(iii) The CAIR designated representative submits notification of the date of certification testing of a replacement monitoring system for the retired or discontinued monitoring system in accordance with paragraph (B)(4)(c)(i) of this rule.

(5) Long-term cold storage.

The owner or operator of a CAIR SO2 unit is subject to the applicable provisions of 40 CFR Part 75 of this rule concerning units in long-term cold storage.

(B) Initial certification and recertification procedures.

(1) The owner or operator of a CAIR SO2 unit shall be exempt from the initial certification requirements of this rule for a monitoring system under paragraph (A)(1)(a) of this rule if the following conditions are met:

(a) The monitoring system has been previously certified in accordance with 40 CFR Part 75.

(b) The applicable quality-assurance and quality-control requirements of 40 CFR 75.21 and 40 CFR Part 75, Appendices B and D are fully met for the certified monitoring system described in paragraph (A)(1)(a) of this rule.

(2) The recertification provisions of this rule shall apply to a monitoring system under paragraph (A)(1)(a) of this rule exempt from initial certification requirements under paragraph (A)(1) of this rule.

(3) [Reserved].

(4) Except as provided in paragraph (B)(1) of this rule, the owner or operator of a CAIR SO2 unit shall comply with the following initial certification and recertification procedures, for a continuous monitoring system (i.e., a continuous emission monitoring system and an excepted monitoring system under 40 CFR Part 75, Appendix D) under paragraph (A)(1)(a) of this rule. The owner or operator of a unit that qualifies to use the low mass emissions excepted monitoring methodology under 40 CFR 75.19 or that qualifies to use an alternative monitoring system under 40 CFR Part 75, Subpart E shall comply with the procedures in paragraph (B)(5) or (B)(6) of this rule respectively.

(a) Requirements for initial certification. The owner or operator shall ensure that each continuous monitoring system under paragraph (A)(1)(a) of this rule (including the automated data acquisition and handling system) successfully completes all of the initial certification testing required under 40 CFR 75.20 by the applicable deadline in paragraph (A)(2) of this rule. In addition, whenever the owner or operator installs a monitoring system to meet the requirements of this rule in a location where no such monitoring system was previously installed, initial certification in accordance with 40 CFR 75.20 is required.

(b) Requirements for recertification. Whenever the owner or operator makes a replacement, modification, or change in any certified continuous emission monitoring system under paragraph (A)(1)(a) of this rule that may significantly affect the ability of the system to accurately measure or record SO2 mass emissions or heat input rate or to meet the quality-assurance and quality-control requirements of 40 CFR 75.21 or 40 CFR Part 75, Appendix B, the owner or operator shall recertify the monitoring system in accordance with 40 CFR 75.20(b). Furthermore, whenever the owner or operator makes

a replacement, modification, or change to the flue gas handling system or the unit's operation that may significantly change the stack flow or concentration profile, the owner or operator shall recertify each continuous emission monitoring system whose accuracy is potentially affected by the change, in accordance with 40 CFR 75.20(b). Examples of changes to a continuous emission monitoring system that require recertification include: replacement of the analyzer, complete replacement of an existing continuous emission monitoring system, or change in location or orientation of the sampling probe or site. Any fuel flowmeter system under paragraph (A)(1)(a) of this rule is subject to the recertification requirements in 40 CFR 75.20(g)(6).

(c) Approval process for initial certification and recertification. Paragraphs (B)(4)(c)(i) to (B)(4)(c)(iv) of this rule apply to both initial certification and recertification of a continuous monitoring system under paragraph (A)(1)(a) of this rule. For recertifications, replace the words "certification" and "initial certification" with the word "recertification," replace the word "certified" with the word "recertified," and follow the procedures in 40 CFR 75.20(b)(5) and 40 CFR 75.20(g)(7) in lieu of the procedures in paragraph (B)(4)(c)(v) of this rule.

(i) Notification of certification. The CAIR designated representative shall submit to the director, the USEPA region V office, and the administrator written notice of the dates of certification testing, in accordance with paragraph (D) of this rule.

(ii) Certification application. The CAIR designated representative shall submit to the director a certification application for each monitoring system. A complete certification application shall include the information specified in 40 CFR 75.63.

(iii) Provisional certification date. The provisional certification date for a monitoring system shall be determined in accordance with 40 CFR 75.20(a)(3). A provisionally certified monitoring system may be used under the CAIR SO2 trading program for a period not to exceed one hundred twenty days after receipt by the director of the complete certification application for the monitoring system under paragraph (B)(4)(c)(ii) of this rule. Data measured and recorded by the provisionally certified monitoring system, in accordance with the requirements of 40 CFR Part 75, shall be considered valid quality assured data (retroactive to the date and time of provisional certification), provided that the director does not invalidate the provisional certification by issuing a notice of disapproval within one hundred twenty days of the date of receipt of the complete certification application by the director.

(iv) Certification application approval process. The director shall issue a written notice of approval or disapproval of the certification application to the owner or operator within one hundred twenty days of receipt of the complete certification application under paragraph (B)(4)(c)(ii) of this rule. In the event the director does not issue such a notice within such one hundred twenty-day period, each monitoring system that meets the applicable performance requirements of 40 CFR Part 75 and is included in the certification application shall be deemed certified for use under the CAIR SO2 trading program.

(a) Approval notice. If the certification application is complete and shows that each monitoring system meets the applicable performance requirements of 40 CFR Part 75, then the director shall issue a written notice of approval of the certification application within one hundred twenty days of receipt.

(b) Incomplete application notice. If the certification application is not complete, then the director shall issue a written notice of incompleteness that sets a reasonable date by which the CAIR designated representative must submit the additional information required to complete the certification application. If the CAIR designated representative does not comply with the notice of incompleteness by the specified date, then the director may issue a notice of disapproval under paragraph (B)(4)(c)(iv)(c) of this rule. The one hundred twenty-day review period shall not begin before receipt of a complete certification application.

(c) Disapproval notice. If the certification application shows that any monitoring system does not meet the performance requirements of 40 CFR Part 75 or if the certification application is incomplete and the requirement for disapproval under paragraph (B)(4)(c)(iv)(b) of this rule is

met, then the director shall issue a written notice of disapproval of the certification application. Upon issuance of such notice of disapproval, the provisional certification is invalidated by the director and the data measured and recorded by each uncertified monitoring system shall not be considered valid quality-assured data beginning with the date and hour of provisional certification (as defined under 40 CFR 75.20(a)(3)). The owner or operator shall follow the procedures for loss of certification in paragraph (B)(4)(c)(v) of this rule for each monitoring system that is disapproved for initial certification.

(d) Audit decertification. The director or, for a CAIR SO2 opt-in unit or a unit for which a CAIR opt-in permit application is submitted and not withdrawn and a CAIR opt-in permit is not yet issued or denied

under rule 3745-109-14 of the Administrative Code, the administrator may issue a notice of disapproval of the certification status of a monitor in accordance with paragraph (C)(2) of this rule.

(v) Procedures for loss of certification. If the director or the administrator issues a notice of disapproval of a certification application under paragraph (B)(4)(c)(iv)(c) of this rule or a notice of disapproval of certification status under paragraph (B)(4)(c)(iv)(d) of this rule, then:

(a) The owner or operator shall substitute the following values, for each disapproved monitoring system, for each hour of unit operation during the period of invalid data specified under 40 CFR 75.20(a)(4)(iii), 40 CFR 75.20(g)(7), or 40 CFR 75.21(e) and continuing until the applicable date and hour specified under 40 CFR 75.20(a)(5)(i) or 40 CFR 75.20(g)(7):

(i) For a disapproved SO2 pollutant concentration monitor and disapproved flow monitor, respectively, the maximum potential concentration of SO2 and the maximum potential flow rate, as defined in 40 CFR Part 75, Appendix A, Sections 2.1.1.1 and 2.1.4.1.

(ii) For a disapproved moisture monitoring system and disapproved diluent gas monitoring system, respectively, the minimum potential moisture percentage and either the maximum potential CO2 concentration or the minimum potential O2 concentration (as applicable), as defined in 40 CFR Part 75, Appendix A, Sections 2.1.3.1, 2.1.3.2, and 2.1.5.

(iii) For a disapproved fuel flowmeter system, the maximum potential fuel flow rate, as defined in 40 CFR Part 75, Appendix D, Section 2.4.2.1.

(b) The CAIR designated representative shall submit a notification of certification retest dates and a new certification application in accordance with paragraphs (B)(4)(c)(i) and (B)(4)(c)(ii) of this rule.

(c) The owner or operator shall repeat all certification tests or other requirements that were failed by the monitoring system, as indicated in the director's or the administrator's notice of disapproval, no later than thirty unit operating days after the date of issuance of the notice of disapproval.

(5) Initial certification and recertification procedures for units using the low mass emission excepted methodology under 40 CFR 75.19. The owner or operator of a unit qualified to use the low mass emissions (LME) excepted methodology under 40 CFR 75.19 shall meet the applicable certification and recertification requirements in 40 CFR 75.19(a)(2) and 40 CFR 75.20(h). If the owner or operator of such a unit elects to certify a fuel flowmeter system for heat input determination, the owner or operator shall also meet the certification and recertification requirements in 40 CFR 75.20(g).

(6) Certification/recertification procedures for alternative monitoring systems. The CAIR designated representative of each unit for which the owner or operator intends to use an alternative monitoring system approved by the administrator and, if applicable, the director under 40 CFR Part 75, Subpart E shall comply with the applicable notification and application procedures of 40 CFR 75.20(f).

(C) Out of control periods.

(1) Whenever any monitoring system fails to meet the quality-assurance and quality-control requirements or data validation requirements of 40 CFR Part 75, data shall be substituted using the applicable missing data procedures in 40 CFR Part 75, Subpart D, or 40 CFR Part 75, Appendix D.

(2) Audit decertification. Whenever both an audit of a monitoring system and a review of the initial certification or recertification application reveal that any monitoring system should not have been certified or recertified because it did not meet a particular performance specification or other requirement under paragraph (B) of this rule or the applicable provisions of 40 CFR Part 75, both at the time of the initial certification or recertification application submission and at the time of the audit, the director or, for a CAIR SO2 opt-in unit or a unit for which a CAIR opt-in permit application is submitted and not withdrawn and a CAIR opt-in permit is not yet issued or denied under rule 3745-109-14 of the Administrative Code, the administrator shall issue a notice of disapproval of the certification status of such monitoring system. For the purposes of this paragraph, an audit shall be either a field audit or an audit of any information submitted to the director or the administrator. By issuing the notice of disapproval, the director or the administrator revokes prospectively the certification status of the monitoring system. The data measured and recorded by the monitoring system shall not be considered valid quality-assured data from the date of issuance of the notification of the revoked certification status until the date and time that the owner or operator completes subsequently approved initial certification or recertification tests for the monitoring system. The owner or operator shall follow the applicable initial certification or recertification procedures in paragraph (B) of this rule for each disapproved monitoring system.

(D) Notifications.

The CAIR designated representative for a CAIR SO2 unit shall submit written notice to the director and the administrator in accordance with 40 CFR 75.61.

(E) Record keeping and reporting.

(1) General provisions. The CAIR designated representative shall comply with all record keeping and reporting requirements in this paragraph, the applicable record keeping and reporting requirements in 40 CFR Part 75, Subparts F and G, and the requirements of paragraph (A)(5)(a) of rule 3745-109-09 of the Administrative Code.

(2) Monitoring plans. The owner or operator of a CAIR SO2 unit shall comply with requirements of 40 CFR 75.62 and, for a unit for which a CAIR opt-in permit application is submitted and not withdrawn and a CAIR opt-in permit is not yet issued or denied under rule 3745-109-14 of the Administrative Code paragraphs (D) and (E)(1) of rule 3745-109-14 of the Administrative Code.

(3) Certification applications. The CAIR designated representative shall submit an application to the director within forty-five days after completing all initial certification or recertification tests required under paragraph (B) of this rule, including the information required under 40 CFR 75.63.

(4) Quarterly reports. The CAIR designated representative shall submit quarterly reports, as follows:

(a) The CAIR designated representative shall report the SO2 mass emissions data and heat input data for the CAIR SO2 unit, in an electronic quarterly report in a format prescribed by the administrator, for each calendar quarter beginning with the following:

(i) For a unit that commences commercial operation before July 1, 2008, the calendar quarter covering January 1, 2009 to March 31, 2009.

(ii) For a unit that commences commercial operation on or after July 1, 2008, the calendar quarter corresponding to the earlier of the date of provisional certification or the applicable deadline for initial certification under paragraph (A)(2) of this rule, unless that quarter is the third or fourth quarter of 2008, in which case reporting shall commence in the quarter covering January 1, 2009 to March 31, 2009.

(iii) Notwithstanding paragraphs (E)(4)(a)(i) and (E)(4)(a)(ii) of this rule, for a unit for which a CAIR opt-in permit application is submitted and not withdrawn and a CAIR opt-in permit is not yet issued or denied under rule 3745-109-14 of the Administrative Code, the calendar

quarter corresponding to the date specified in paragraph (E)(2) of rule 3745-109-14 of the Administrative Code.

(iv) Notwithstanding paragraphs (E)(4)(a)(i) and (E)(4)(a)(ii) of this rule, for a CAIR SO2 opt-in unit under rule 3745-109-14 of the Administrative Code, the calendar quarter corresponding to the date on which the CAIR SO2 opt-in unit enters the CAIR SO2 trading program as provided in paragraph (E)(7) of rule 3745-109-14 of the Administrative Code.

(b) The CAIR designated representative shall submit each quarterly report to the administrator within thirty days following the end of the calendar quarter covered by the report. Quarterly reports shall be submitted in the manner specified in 40 CFR 75.64.

(c) For CAIR SO2 units that are also subject to an acid rain emissions limitation or the CAIR NOx annual trading program, CAIR NOx ozone season trading program, or Hg budget trading program, quarterly reports shall include the applicable data and information required by 40 CFR Part 75, Subparts F to I as applicable, in addition to the SO2 mass emission data, heat input data, and other information required by this rule.

(5) Compliance certification. The CAIR designated representative shall submit to the administrator a compliance certification (in a format prescribed by the administrator) in support of each quarterly report based on reasonable inquiry of those persons with primary responsibility for ensuring that all of the unit's emissions are correctly and fully monitored. The certification shall state the following:

(a) The monitoring data submitted were recorded in accordance with the applicable requirements of this rule and 40 CFR Part 75, including the quality assurance procedures and specifications.

(b) For a unit with add-on SO2 emission controls and for all hours where SO2 data are substituted in accordance with 40 CFR 75.34(a)(1), the add-on emission controls were operating within the range of parameters listed in the quality assurance/quality control program under 40 CFR Part 75, Appendix B and the substitute data values do not systematically underestimate SO2 emissions.

(F) Petitions.

(1) The CAIR designated representative of a CAIR SO2 unit that is subject to an acid rain emissions limitation may submit a petition under 40 CFR 75.66 to the administrator requesting approval to apply an alternative to any requirement of this rule. Application of an alternative to any requirement of this rule is in

accordance with this rule only to the extent that the petition is approved in writing by the administrator, in consultation with the director.

(2) The CAIR designated representative of a CAIR SO2 unit that is not subject to an acid rain emissions limitation may submit a petition under 40 CFR 75.66 to the director and the administrator requesting approval to apply an alternative to any requirement of this rule. Application of an alternative to any requirement of this rule is in accordance with this rule only to the extent that the petition is approved in writing by both the director and the administrator.

Effective: 11/14/2013

R.C. 119.032 review dates: 08/29/2013 and 11/14/2018

CERTIFIED ELECTRONICALLY
Certification

11/04/2013
Date

Promulgated Under: 119.03
Statutory Authority: 3704.03(E)
Rule Amplifies: 3704.03(A), 3704.03(E), 3704.03(V)
Prior Effective Dates: 09/27/07, 07/16/09

3745-109-14 **CAIR SO2 opt-in units.**

[Comment: For dates of non-regulatory government publications, publications of recognized organizations and associations, federal rules, and federal statutory provisions referenced in this rule, see paragraph (H) of rule 3745-109-01 of the Administrative Code titled "Referenced materials."]

(A) Opt-in unit applicability.

A CAIR SO2 opt-in unit must be a unit that meets the following:

(1) Is located in the state.

(2) Is not a CAIR SO2 unit under paragraph (C) of rule 3745-109-01 of the Administrative Code and is not covered by a retired unit exemption under paragraph (D) of rule 3745-109-01 of the Administrative Code that is in effect.

(3) Is not covered by a retired unit exemption under 40 CFR 72.8 that is in effect and is not an opt-in source under 40 CFR Part 74.

(4) Has or is required or qualified to have a Title V operating permit or other federally enforceable permit.

(5) Vents all of its emissions to a stack and can meet the monitoring, record keeping, and reporting requirements of rule 3745-109-13 of the Administrative Code.

(B) General.

(1) Except as otherwise provided in paragraphs (A), (B), (C), (E), (F) and (G) of rule 3745-109-01 of the Administrative Code, rules 3745-109-09, 3745-109-10, 3745-109-11, and 3745-109-13 of the Administrative Code, a CAIR SO2 opt-in unit shall be treated as a CAIR SO2 unit for purposes of applying such paragraphs and rules.

(2) Solely for purposes of applying, as provided in this rule, the requirements of rule 3745-109-13 of the Administrative Code shall apply to a unit for which a CAIR opt-in permit application is submitted and not withdrawn and a CAIR opt-in permit is not yet issued or denied under this rule, such unit shall be treated as a CAIR SO2 unit before issuance of a CAIR opt-in permit for such unit.

(C) Designated representative.

Any CAIR SO2 opt-in unit, and any unit for which a CAIR opt-in permit application is submitted and not withdrawn and a CAIR opt-in permit is not yet issued or denied under this rule, located at the same source as one or more CAIR SO2 units shall have

the same CAIR designated representative and alternate CAIR designated representative as such CAIR SO2 units.

(D) Applying for CAIR opt-in permit.

(1) The CAIR designated representative of a unit meeting the requirements for a CAIR SO2 opt-in unit in paragraph (A) of this rule may apply for an initial CAIR opt-in permit at any time, except as provided under paragraphs (G)(6) and (G)(7) of this rule, and, in order to apply, must submit the following:

(a) A complete CAIR permit application under paragraph (C) of rule 3745-109-10 of the Administrative Code.

(b) A certification, in a format specified by the director, that the unit meets the following:

(i) Is not a CAIR SO2 unit under paragraph (C) of rule 3745-109-01 of the Administrative Code and is not covered by a retired unit exemption under paragraph (D) of rule 3745-109-01 of the Administrative Code that is in effect.

(ii) Is not covered by a retired unit exemption under 40 CFR 72.8 that is in effect.

(iii) Is not and, so long as the unit is a CAIR SO2 opt-in unit, shall not become, an opt-in source under 40 CFR Part 74.

(iv) Vents all of its emissions to a stack.

(v) Has documented heat input for more than eight hundred seventy-six hours during the six months immediately preceding submission of the CAIR permit application under paragraph (C) of rule 3745-109-10 of the Administrative Code.

(c) A monitoring plan in accordance with rule 3745-109-13 of the Administrative Code.

(d) A complete certificate of representation under paragraph (D) of rule 3745-109-09 of the Administrative Code consistent with paragraph (C) of this rule, if no CAIR designated representative has been previously designated for the source that includes the unit.

(e) A statement, in a format specified by the director, whether the CAIR designated representative requests that the unit be allocated CAIR SO2 allowances under paragraph (I)(2) or (I)(3) of this rule (subject to the conditions in paragraphs (E)(8) and (G)(7) of this rule). If allocation under

paragraph (I)(3) of this rule is requested, this statement shall include a statement that the owners and operators of the unit intend to repower the unit before January 1, 2015 and that they will provide, upon request, documentation demonstrating such intent.

(2) Duty to reapply.

(a) The CAIR designated representative of a CAIR SO2 opt-in unit shall submit a complete CAIR permit application under paragraph (C) of rule 3745-109-10 of the Administrative Code to renew the CAIR opt-in unit permit in accordance with the director's regulations for Title V operating permits, or the director's regulations for other federally enforceable permits if applicable, addressing permit renewal.

(b) Unless the permitting authority issues a notification of acceptance of withdrawal of the CAIR SO2 opt-in unit from the CAIR SO2 trading program in accordance with paragraph (G) of this rule or the unit becomes a CAIR SO2 unit under paragraph (C) of rule 3745-109-01 of the Administrative Code, the CAIR SO2 opt-in unit shall remain subject to the requirements for a CAIR SO2 opt-in unit, even if the CAIR designated representative for the CAIR SO2 opt-in unit fails to submit a CAIR permit application that is required for renewal of the CAIR opt-in permit under paragraph (D)(2)(a) of this rule.

(E) Opt-in process.

The director shall issue or deny a CAIR opt-in permit for a unit for which an initial application for a CAIR opt-in permit under paragraph (D) of this rule is submitted in accordance with the following:

(1) Interim review of monitoring plan. The director and the administrator shall determine, on an interim basis, the sufficiency of the monitoring plan accompanying the initial application for a CAIR opt-in permit under paragraph (D) of this rule. A monitoring plan is sufficient, for purposes of interim review, if the plan appears to contain information demonstrating that the SO2 emissions rate and heat input of the unit and all other applicable parameters are monitored and reported in accordance with rule 3745-109-13 of the Administrative Code. A determination of sufficiency shall not be construed as acceptance or approval of the monitoring plan.

(2) Monitoring and reporting.

(a) If the director and the administrator determine that the monitoring plan is sufficient under paragraph (E)(1) of this rule, the owner or operator shall monitor and report the SO2 emissions rate and the heat input of the unit and all other applicable parameters, in accordance with rule 3745-109-13 of the

Administrative Code, starting on the date of certification of the appropriate monitoring systems under rule 3745-109-13 of the Administrative Code and continuing until a CAIR opt-in permit is denied under paragraph (E)(6) of this rule or, if a CAIR opt-in permit is issued, the date and time when the unit is withdrawn from the CAIR SO2 trading program in accordance with paragraph (G) of this rule.

(b) The monitoring and reporting under paragraph (E)(2)(a) of this rule shall include the entire control period immediately before the date on which the unit enters the CAIR SO2 trading program under paragraph (E)(7) of this rule, during which period monitoring system availability must not be less than ninety per cent under rule 3745-109-13 of the Administrative Code and the unit must be in full compliance with any applicable state or federal emissions or emissions-related requirements.

(c) To the extent the SO2 emissions rate and the heat input of the unit are monitored and reported in accordance with rule 3745-109-13 of the Administrative Code for one or more control periods, in addition to the control period under paragraph (E)(2)(b) of this rule, during which control periods monitoring system availability is not less than ninety per cent under rule 3745-109-13 of the Administrative Code and the unit is in full compliance with any applicable state or federal emissions or emissions-related requirements and which control periods begin not more than three years before the unit enters the CAIR SO2 trading program under paragraph (E)(7) of this rule, such information shall be used as provided in paragraphs (E)(3) and (E)(4) of this rule.

(3) The unit's baseline heat input shall equal one of the following:

(a) If the unit's SO2 emissions rate and heat input are monitored and reported for only one control period, in accordance with paragraph (E)(2)(a) of this rule, the unit's total heat input (in mmBtu) for the control period.

(b) If the unit's SO2 emissions rate and heat input are monitored and reported for more than one control period, in accordance with paragraphs (E)(2)(a), (E)(2)(b) and (E)(2)(c) of this rule, the average of the amounts of the unit's total heat input (in mmBtu) for the control periods under paragraphs (E)(2)(b) and (E)(2)(c) of this rule.

(4) The unit's baseline SO2 emission rate shall equal one of the following:

(a) If the unit's SO2 emissions rate and heat input are monitored and reported for only one control period, in accordance with paragraph (E)(2)(a) of this rule, the unit's SO2 emissions rate (in pounds per mmBtu) for the control period.

(b) If the unit's SO2 emissions rate and heat input are monitored and reported for more than one control period, in accordance with paragraphs (E)(2)(b) and (E)(2)(c) of this rule, and the unit does not have add-on SO2 emission controls during any such control periods, the average of the amounts of the unit's SO2 emissions rate (in pounds per mmBtu) for the control periods under paragraphs (E)(2)(b) and (E)(2)(c) of this rule.

(c) If the unit's SO2 emissions rate and heat input are monitored and reported for more than one control period, in accordance with paragraphs (E)(2)(a) and (E)(2)(b) of this rule, and the unit has add-on SO2 emission controls during any such control periods, the average of the amounts of the unit's SO2 emissions rate (in pounds per mmBtu) for such control periods during which the unit has add-on SO2 emission controls.

(5) Issuance of CAIR opt-in permit. After calculating the baseline heat input and the baseline SO2 emissions rate for the unit under paragraphs (E)(3) and (E)(4) of this rule and if the director determines that the CAIR designated representative shows that the unit meets the requirements for a CAIR SO2 opt-in unit in paragraph (A) of this rule and meets the elements certified in paragraph (D)(1)(b) of this rule, the director shall issue a CAIR opt-in permit. The director shall provide a copy of the CAIR opt-in permit to the administrator, who shall then establish a compliance account for the source that includes the CAIR SO2 opt-in unit unless the source already has a compliance account.

(6) Issuance of denial of CAIR opt-in permit. Notwithstanding paragraphs (E)(1) to (E)(5) of this rule, if at any time before issuance of a CAIR opt-in permit for the unit, the director determines that the CAIR designated representative fails to show that the unit meets the requirements for a CAIR SO2 opt-in unit in paragraph (A) of this rule or meets the elements certified in paragraph (D)(1)(b) of this rule, the director shall issue a denial of a CAIR opt-in permit for the unit.

(7) Date of entry into CAIR SO2 trading program. A unit for which an initial CAIR opt-in permit is issued by the director shall become a CAIR SO2 opt-in unit, and a CAIR SO2 unit, as of the later of January 1, 2010 or January first of the first control period during which such CAIR opt-in permit is issued.

(8) Repowered CAIR SO2 opt-in unit.

(a) If a CAIR designated representative requests, and the director issues a CAIR opt-in permit providing for, allocation to a CAIR SO2 opt-in unit of CAIR SO2 allowances under paragraph (I)(3) of this rule and such unit is repowered after its date of entry into the CAIR SO2 trading program under paragraph (E)(7) of this rule, the repowered unit shall be treated as a CAIR SO2 opt-in unit replacing the original CAIR SO2 opt-in unit, as of the date of start-up of the repowered unit's combustion chamber.

(b) Notwithstanding paragraphs (E)(3) and (E)(4) of this rule, as of the date of start-up under paragraph (E)(8)(a) of this rule, the repowered unit shall be deemed to have the same date of commencement of operation, date of commencement of commercial operation, baseline heat input, and baseline SO2 emission rate as the original CAIR SO2 opt-in unit, and the original CAIR SO2 opt-in unit shall no longer be treated as a CAIR SO2 opt-in unit or a CAIR SO2 unit.

(F) CAIR opt-in permit contents.

(1) Each CAIR opt-in permit shall contain the following:

(a) All elements required for a complete CAIR permit application under paragraph (C) of rule 3745-109-10 of the Administrative Code.

(b) The certification in paragraph (D)(1)(b) of this rule.

(c) The unit's baseline heat input under paragraph (E)(3) of this rule.

(d) The unit's baseline SO2 emission rate under paragraph (E)(4) of this rule.

(e) A statement whether the unit is to be allocated CAIR SO2 allowances under paragraph (I)(2) or (I)(3) of this rule (subject to the conditions in paragraphs (E)(8) and (G)(7) of this rule).

(f) A statement that the unit may withdraw from the CAIR SO2 trading program only in accordance with paragraph (G) of this rule.

(g) A statement that the unit is subject to, and the owners and operators of the unit must comply with, the requirements of paragraph (H) of this rule.

(2) Each CAIR opt-in permit is deemed to incorporate automatically the definitions of terms under paragraph (B) of rule 3745-109-01 of the Administrative Code and, upon recordation by the administrator under rule 3745-109-11 or 3745-109-12 of the Administrative Code or this rule, every allocation, transfer, or deduction of CAIR SO2 allowances to or from the compliance account of the source that includes a CAIR SO2 opt-in unit covered by the CAIR opt-in permit.

(3) The CAIR opt-in permit shall be included, in a format specified by the permitting authority, in the CAIR permit for the source where the CAIR SO2 opt-in unit is located and in a title V operating permit or other federally enforceable permit for the source.

(G) Withdrawal from CAIR SO2 trading program.

Except as provided under paragraph (G)(7) of this rule, a CAIR SO2 opt-in unit may withdraw from the CAIR SO2 trading program, but only if the director issues a notification to the CAIR designated representative of the CAIR SO2 opt-in unit of the acceptance of the withdrawal of the CAIR SO2 opt-in unit in accordance with paragraph (G)(4) of this rule.

(1) Requesting withdrawal. In order to withdraw a CAIR SO2 opt-in unit from the CAIR SO2 trading program, the CAIR designated representative of the CAIR SO2 opt-in unit shall submit to the director a request to withdraw effective as of midnight of December thirty-first of a specified calendar year, which date must be at least four years after December thirty-first of the year of entry into the CAIR SO2 trading program under paragraph (E)(7) of this rule. The request must be submitted no later than ninety days before the requested effective date of withdrawal.

(2) Conditions for withdrawal. Before a CAIR SO2 opt-in unit covered by a request under paragraph (G)(1) of this rule may withdraw from the CAIR SO2 trading program and the CAIR opt-in permit may be terminated under paragraph (G)(5) of this rule, the following conditions shall be met:

(a) For the control period ending on the date on which the withdrawal is to be effective, the source that includes the CAIR SO2 opt-in unit must meet the requirement to hold CAIR SO2 allowances under paragraph (E)(3) of rule 3745-109-01 of the Administrative Code and cannot have any excess emissions.

(b) After the requirement for withdrawal under paragraph (G)(2)(a) of this rule is met, the administrator shall deduct from the compliance account of the source that includes the CAIR SO2 opt-in unit CAIR SO2 allowances equal in amount to and allocated for the same or a prior control period as any CAIR SO2 allowances allocated to the CAIR SO2 opt-in unit under paragraph (I) of this rule for any control period for which the withdrawal is to be effective. If there are no remaining CAIR SO2 units at the source, the administrator shall close the compliance account, and the owners and operators of the CAIR SO2 opt-in unit may submit a CAIR SO2 allowance transfer for any remaining CAIR SO2 allowances to another CAIR SO2 allowance tracking system in accordance with rule 3745-109-12 of the Administrative Code.

(3) Notification.

(a) After the requirements for withdrawal under paragraphs (G)(1) and (G)(2) of this rule are met (including deduction of the full amount of CAIR SO2 allowances required), the director shall issue a notification to the CAIR designated representative of the CAIR SO2 opt-in unit of the acceptance of

the withdrawal of the CAIR SO2 opt-in unit as of midnight on December thirty-first of the calendar year for which the withdrawal was requested.

(b) If the requirements for withdrawal under paragraphs (G)(1) and (G)(2) of this rule are not met, the director shall issue a notification to the CAIR designated representative of the CAIR SO2 opt-in unit that the CAIR SO2 opt-in unit's request to withdraw is denied. Such CAIR SO2 opt-in unit shall continue to be a CAIR SO2 opt-in unit.

(4) Permit amendment. After the director issues a notification under paragraph (G)(3)(a) of this rule that the requirements for withdrawal have been met, the director shall revise the CAIR permit covering the CAIR SO2 opt-in unit to terminate the CAIR opt-in permit for such unit as of the effective date specified under paragraph (G)(3)(a) of this rule. The unit shall continue to be a CAIR SO2 opt-in unit until the effective date of the termination and shall comply with all requirements under the CAIR SO2 trading program concerning any control periods for which the unit is a CAIR SO2 opt-in unit, even if such requirements arise or must be complied with after the withdrawal takes effect.

(5) Reapplication upon failure to meet conditions of withdrawal. If the director denies the CAIR SO2 opt-in unit's request to withdraw, the CAIR designated representative may submit another request to withdraw in accordance with paragraphs (G)(1) and (G)(2) of this rule.

(6) Ability to reapply to the CAIR SO2 trading program. Once a CAIR SO2 opt-in unit withdraws from the CAIR SO2 trading program and its CAIR opt-in permit is terminated under this rule, the CAIR designated representative may not submit another application for a CAIR opt-in permit under paragraph (D) of this rule for such CAIR SO2 opt-in unit before the date that is four years after the date on which the withdrawal became effective. Such new application for a CAIR opt-in permit shall be treated as an initial application for a CAIR opt-in permit under paragraph (E) of this rule.

(7) Inability to withdraw. Notwithstanding paragraphs (G)(1) to (G)(6) of this rule, a CAIR SO2 opt-in unit shall not be eligible to withdraw from the CAIR SO2 trading program if the CAIR designated representative of the CAIR SO2 opt-in unit requests, and the director issues a CAIR opt-in permit providing for, allocation to the CAIR SO2 opt-in unit of CAIR SO2 allowances under paragraph (I)(3) of this rule.

(H) Change in regulatory status.

(1) Notification. If a CAIR SO2 opt-in unit becomes a CAIR SO2 unit under paragraph (C) of rule 3745-109-01 of the Administrative Code, then the CAIR designated representative shall notify in writing the director and the

administrator of such change in the CAIR SO2 opt-in unit's regulatory status, within thirty days of such change.

(2) Director's and administrator's actions.

(a) If a CAIR SO2 opt-in unit becomes a CAIR SO2 unit under paragraph (C) of rule 3745-109-01 of the Administrative Code, the director shall revise the CAIR SO2 opt-in unit's CAIR opt-in permit to meet the requirements of a CAIR permit under paragraph (D) of rule 3745-109-10 of the Administrative Code, and remove the CAIR opt-in unit provisions, as of the date on which the CAIR SO2 opt-in unit becomes a CAIR SO2 unit under paragraph (C) of rule 3745-109-01 of the Administrative Code.

(b) Compliance deductions.

(i) The administrator shall deduct from the compliance account of the source that includes a CAIR SO2 opt-in unit that becomes a CAIR SO2 unit under paragraph (C) of rule 3745-109-01 of the Administrative Code, CAIR SO2 allowances equal in amount to and allocated for the same or a prior control period as follows:

(a) Any CAIR SO2 allowances allocated to the CAIR SO2 opt-in unit under paragraph (I) of rule 3745-109-14 of the Administrative Code for any control period after the date on which the CAIR SO2 opt-in unit becomes a CAIR SO2 unit under paragraph (C) of rule 3745-109-01 of the Administrative Code.

(b) If the date on which the CAIR SO2 opt-in unit becomes a CAIR SO2 unit under paragraph (C) of rule 3745-109-01 of the Administrative Code is not December thirty-first, the CAIR SO2 allowances allocated to the CAIR SO2 opt-in unit under paragraph (I) of this rule for the control period that includes the date on which the CAIR SO2 opt-in unit becomes a CAIR SO2 unit under paragraph (C) of rule 3745-109-01 of the Administrative Code, multiplied by the ratio of the number of days, in the control period, starting with the date on which the CAIR SO2 opt-in unit becomes a CAIR SO2 unit under paragraph (C) of rule 3745-109-01 of the Administrative Code divided by the total number of days in the control period and rounded to the nearest whole allowance as appropriate.

(ii) The CAIR designated representative shall ensure that the compliance account of the source that includes the CAIR SO2 opt-in unit that becomes a CAIR SO2 unit under paragraph (C) of rule 3745-109-01 of the Administrative Code contains the CAIR SO2 allowances necessary

for completion of the deduction under paragraph (H)(2)(b)(i) of this rule.

(I) CAIR SO2 allowance allocations to CAIR SO2 opt-in units.

(1) Timing requirements.

(a) When the CAIR opt-in permit is issued under paragraph (E)(5) of this rule, the director shall allocate CAIR SO2 allowances to the CAIR SO2 opt-in unit, and submit to the administrator the allocation for the control period in which a CAIR SO2 opt-in unit enters the CAIR SO2 trading program under paragraph (E)(7) of this rule, in accordance with paragraph (I)(2) or (I)(3) of this rule.

(b) By no later than October thirty-first of the control period after the control period in which a CAIR SO2 opt-in unit enters the CAIR SO2 trading program under paragraph (E)(7) of this rule, and October thirty-first of each year thereafter, the director shall allocate CAIR SO2 allowances to the CAIR SO2 opt-in unit, and submit to the administrator the allocation for the control period that includes such submission deadline and in which the unit is a CAIR SO2 opt-in unit, in accordance with paragraph (I)(2) or (I)(3) of this rule.

(2) Calculation of allocation. For each control period for which a CAIR SO2 opt-in unit is to be allocated CAIR SO2 allowances, the director shall allocate in accordance with the following procedures:

(a) The heat input (in mmBtu) used for calculating the CAIR SO2 allowance allocation shall be the lesser of the following:

(i) The CAIR SO2 opt-in unit's baseline heat input determined under paragraph (E)(3) of this rule.

(ii) The CAIR SO2 opt-in unit's heat input, as determined in accordance with rule 3745-109-13 of the Administrative Code, for immediately prior control period, except when the allocation is being calculated for the control period in which the CAIR SO2 opt-in unit enters the CAIR SO2 trading program under paragraph (E)(7) of this rule.

(b) The SO2 emission rate (in pounds per mmBtu) used for calculating CAIR SO2 allowance allocations shall be the lesser of the following:

(i) The CAIR SO2 opt-in unit's baseline SO2 emissions rate (in pounds per mmBtu) determined under paragraph (E)(4) of this rule and multiplied by seventy per cent.

(ii) The most stringent state or federal SO2 emissions limitation applicable to the CAIR SO2 opt-in unit at any time during the control period for which CAIR SO2 allowances are to be allocated.

(c) The director shall allocate CAIR SO2 allowances to the CAIR SO2 opt-in unit with a tonnage equivalent equal to, or less than by the smallest possible amount, the heat input under paragraph (I)(2)(a) of this rule, multiplied by the SO2 emission rate under paragraph (I)(2)(b) of this rule, and divided by two thousand pounds per ton.

(3) Notwithstanding paragraph (I)(2) of this rule and if the CAIR designated representative requests, and the director issues a CAIR opt-in permit (based on a demonstration of the intent to repower stated under paragraph (D)(1)(e) of this rule) providing for, allocation to a CAIR SO2 opt-in unit of CAIR SO2 allowances under this rule (subject to the conditions in paragraphs (E)(8) and (G)(7) of this rule), the director shall allocate to the CAIR SO2 opt-in unit as follows:

(a) For each control period in 2010 to 2014 for which the CAIR SO2 opt-in unit is to be allocated CAIR SO2 allowances:

(i) The heat input (in mmBtu) used for calculating CAIR SO2 allowance allocations shall be determined as described in paragraph (I)(2)(a) of this rule.

(ii) The SO2 emission rate (in pounds per mmBtu) used for calculating CAIR SO2 allowance allocations shall be the lesser of the following:

(a) The CAIR SO2 opt-in unit's baseline SO2 emissions rate (in pounds per mmBtu) determined under paragraph (E)(4) of this rule.

(b) The most stringent state or federal SO2 emissions limitation applicable to the CAIR SO2 opt-in unit at any time during the control period in which the CAIR SO2 opt-in unit enters the CAIR SO2 trading program under paragraph (E)(7) of this rule.

(iii) The director shall allocate CAIR SO2 allowances to the CAIR SO2 opt-in unit with a tonnage equivalent equal to, or less than by the smallest possible amount, the heat input under paragraph (I)(3)(a)(i) of this rule, multiplied by the SO2 emission rate under paragraph (I)(3)(a)(ii) of this rule, and divided by two thousand pounds per ton.

(b) For each control period in 2015 and thereafter for which the CAIR SO2 opt-in unit is to be allocated CAIR SO2 allowances:

(i) The heat input (in mmBtu) used for calculating the CAIR SO2 allowance allocations shall be determined as described in paragraph (I)(2)(a) of this rule.

(ii) The SO2 emission rate (in pounds per mmBtu) used for calculating the CAIR SO2 allowance allocation shall be the lesser of the following:

(a) The CAIR SO2 opt-in unit's baseline SO2 emissions rate (in pounds per mmBtu) determined under paragraph (E)(4) of this rule multiplied by ten per cent.

(b) The most stringent state or federal SO2 emissions limitation applicable to the CAIR SO2 opt-in unit at any time during the control period for which CAIR SO2 allowances are to be allocated.

(iii) The director shall allocate CAIR SO2 allowances to the CAIR SO2 opt-in unit with a tonnage equivalent equal to, or less than by the smallest possible amount, the heat input under paragraph (I)(3)(b)(i) of this rule, multiplied by the SO2 emission rate under paragraph (I)(3)(b)(ii) of this rule, and divided by two thousand pounds per ton.

(4) Recordation.

(a) The administrator shall record, in the compliance account of the source that includes the CAIR SO2 opt-in unit, the CAIR SO2 allowances allocated by the director to the CAIR SO2 opt-in unit under paragraph (I)(1)(a) of this rule.

(b) By December first, after the control period in which a CAIR SO2 opt-in unit enters the CAIR SO2 trading program under paragraph (E)(7) of this rule, and December first of each year thereafter, the administrator shall record, in the compliance account of the source that includes the CAIR SO2 opt-in unit, the CAIR SO2 allowances allocated by the director to the CAIR SO2 opt-in unit under paragraph (I)(1)(b) of this rule.

Effective: 11/14/2013

R.C. 119.032 review dates: 08/29/2013 and 11/14/2018

CERTIFIED ELECTRONICALLY
Certification

11/04/2013
Date

Promulgated Under: 119.03
Statutory Authority: 3704.03(E)
Rule Amplifies: 3704.03(A), 3704.03(E), 3704.03(V)
Prior Effective Dates: 09/27/07, 07/16/09

3745-109-15 **CAIR designated representative for CAIR NOx ozone season sources.**

[Comment: For dates of non-regulatory government publications, publications of recognized organizations and associations, federal rules, and federal statutory provisions referenced in this rule, see paragraph (H) of rule 3745-109-01 of the Administrative Code titled "Referenced materials."]

(A) Authorization and responsibilities of CAIR designated representative.

(1) Except as provided under paragraph (B) of this rule, each CAIR NOx ozone season source, including all CAIR NOx ozone season units at the source, shall have one and only one CAIR designated representative, with regard to all matters under the CAIR NOx ozone season trading program concerning the source or any CAIR NOx ozone season unit at the source.

(2) The CAIR designated representative of the CAIR NOx ozone season source shall be selected by an agreement binding on the owners and operators of the source and all CAIR NOx ozone season units at the source and shall act in accordance with the certification statement in paragraph (D)(1)(d)(iv) of this rule.

(3) Upon receipt by the administrator of a complete certificate of representation under paragraph (D) of this rule, the CAIR designated representative of the source shall represent and, by his or her representations, actions, inactions, or submissions, legally bind each owner and operator of the CAIR NOx ozone season source represented and each CAIR NOx ozone season unit at the source in all matters pertaining to the CAIR NOx ozone season trading program, notwithstanding any agreement between the CAIR designated representative and such owners and operators. The owners and operators shall be bound by any decision or order issued to the CAIR designated representative by the director, the administrator, or a court regarding the source or unit.

(4) No CAIR permit will be issued, no emissions data reports will be accepted, and no CAIR NOx ozone season allowance tracking system account will be established for a CAIR NOx ozone season unit at a source, until the administrator has received a complete certificate of representation under paragraph (D) of this rule for a CAIR designated representative of the source and the CAIR NOx ozone season units at the source.

(5) CAIR NOx ozone season trading program submissions.

(a) Each submission under the CAIR NOx ozone season trading program shall be submitted, signed, and certified by the CAIR designated representative for each CAIR NOx ozone season source on behalf of which the submission is made. Each such submission shall include the following certification

statement by the CAIR designated representative: "I am authorized to make this submission on behalf of the owners and operators of the source or units for which the submission is made. I certify under penalty of law that I have personally examined, and am familiar with, the statements and information submitted in this document and all its attachments. Based on my inquiry of those individuals with primary responsibility for obtaining the information, I certify that the statements and information are to the best of my knowledge and belief true, accurate, and complete. I am aware that there are significant penalties for submitting false statements and information or omitting required statements and information, including the possibility of fine or imprisonment."

(b) The director and the administrator shall accept or act on a submission made on behalf of owner or operators of a CAIR NOx ozone season source or a CAIR NOx ozone season unit only if the submission has been made, signed, and certified in accordance with paragraph (A)(5)(a) of this rule.

(B) Alternate CAIR designated representative.

(1) A certificate of representation under paragraph (D) of this rule may designate one and only one alternate CAIR designated representative, who may act on behalf of the CAIR designated representative. The agreement by which the alternate CAIR designated representative is selected shall include a procedure for authorizing the alternate CAIR designated representative to act in lieu of the CAIR designated representative.

(2) Upon receipt by the administrator of a complete certificate of representation under paragraph (D) of this rule, any representation, action, inaction, or submission by the alternate CAIR designated representative shall be deemed to be a representation, action, inaction, or submission by the CAIR designated representative.

(3) Except in paragraph (B) of this rule and paragraph (B) of rule 3745-109-01 of the Administrative Code, paragraphs (A)(1) and (A)(4), (C), (D), (F) of this rule, paragraph (A) of rule 3745-109-18 of the Administrative Code and paragraph (C) of rule 3745-109-21 of the Administrative Code, whenever the term CAIR designated representative is used in rules 3745-109-01 and 3745-109-15 to 3745-109-21 of the Administrative Code, the term shall be construed to include the CAIR designated representative or any alternate CAIR designated representative.

(C) Changing CAIR designated representative and alternate CAIR designated representative; changes in owners and operators.

(1) Changing CAIR designated representative. The CAIR designated representative may be changed at any time upon receipt by the administrator of a superseding

complete certificate of representation under paragraph (D) of this rule. Notwithstanding any such change, all representations, actions, inactions, and submissions by the previous CAIR designated representative before the time and date when the administrator receives the superseding certificate of representation shall be binding on the new CAIR designated representative and the owners and operators of the CAIR NOx ozone season source and the CAIR NOx ozone season units at the source.

(2) Changing alternate CAIR designated representative. The alternate CAIR designated representative may be changed at any time upon receipt by the administrator of a superseding complete certificate of representation under paragraph (D) of this rule. Notwithstanding any such change, all representations, actions, inactions, and submissions by the previous alternate CAIR designated representative before the time and date when the administrator receives the superseding certificate of representation shall be binding on the new alternate CAIR designated representative and the owners and operators of the CAIR NOx ozone season source and the CAIR NOx ozone season units at the source.

(3) Changes in owners and operators.

(a) In the event a owner or operator of a CAIR NOx ozone season source or a CAIR NOx ozone season unit is not included in the list of owners and operators in the certificate of representation under paragraph (D) of this rule, such owner or operator shall be deemed to be subject to and bound by the certificate of representation, the representations, actions, inactions, and submissions of the CAIR designated representative and any alternate CAIR designated representative of the source or unit, and the decisions and orders of the director, the administrator, or a court, as if the owner or operator were included in such list.

(b) Within thirty days following any change in the owners and operators of a CAIR NOx ozone season source or a CAIR NOx ozone season unit, including the addition of a new owner or operator, the CAIR designated representative or any alternate CAIR designated representative shall submit a revision to the certificate of representation under paragraph (D) of this rule amending the list of owners and operators to include the change.

(D) Certificate of representation.

(1) A complete certificate of representation for a CAIR designated representative or an alternate CAIR designated representative shall include the following elements in a format prescribed by the administrator:

(a) Identification of the CAIR NOx ozone season source, and each CAIR NOx ozone season unit at the source, for which the certificate of representation is

submitted, including identification and nameplate capacity of each generator served by each such unit.

(b) The name, address, e-mail address (if any), telephone number, and facsimile transmission number (if any) of the CAIR designated representative and any alternate CAIR designated representative.

(c) A list of the owners and operators of the CAIR NOx ozone season source and of each CAIR NOx ozone season unit at the source.

(d) The following certification statements by the CAIR designated representative and any alternate CAIR designated representative:

(i) "I certify that I was selected as the CAIR designated representative or alternate CAIR designated representative, as applicable, by an agreement binding on the owners and operators of the source and each CAIR NOx ozone season unit at the source."

(ii) "I certify that I have all the necessary authority to carry out my duties and responsibilities under the CAIR NOx ozone season trading program on behalf of the owners and operators of the source and of each CAIR NOx ozone season unit at the source and that each such owner and operator shall be fully bound by my representations, actions, inactions, or submissions."

(iii) "I certify that the owners and operators of the source and of each CAIR NOx ozone season unit at the source shall be bound by any order issued to me by the administrator, the director, or a court regarding the source or unit."

(iv) Where there are multiple holders of a legal or equitable title to, or a leasehold interest in, a CAIR NOx ozone season unit, or where a utility or industrial customer purchases power from a CAIR NOx ozone season unit under a life-of-the-unit, firm power contractual arrangement, "I certify that: I have given a written notice of my selection as the 'CAIR designated representative' or 'alternate CAIR designated representative', as applicable, and of the agreement by which I was selected to each owner and operator of the source and of each CAIR NOx ozone season unit at the source; and CAIR NOx ozone season allowances and proceeds of transactions involving CAIR NOx ozone season allowances will be deemed to be held or distributed in proportion to each holder's legal, equitable, leasehold, or contractual reservation or entitlement, except that, if such multiple holders have expressly provided for a different distribution of CAIR NOx ozone season allowances by contract, CAIR NOx ozone season allowances and proceeds of transactions involving CAIR NOx ozone season

allowances will be deemed to be held or distributed in accordance with the contract."

(e) The signature of the CAIR designated representative and any alternate CAIR designated representative and the dates signed.

(2) Unless otherwise required by the director or the administrator, documents of agreement referred to in the certificate of representation shall not be submitted to the director or the administrator. Neither the director nor the administrator shall be under any obligation to review or evaluate the sufficiency of such documents, if submitted.

(E) Objections concerning CAIR designated representative.

(1) Once a complete certificate of representation under paragraph (D) of this rule has been submitted and received, the director and the administrator shall rely on the certificate of representation unless and until a superseding complete certificate of representation under paragraph (D) of this rule is received by the administrator.

(2) Except as provided in paragraphs (C)(1) and (C)(2) of this rule, no objection or other communication submitted to the director or the administrator concerning the authorization, or any representation, action, inaction, or submission, of the CAIR designated representative shall affect any representation, action, inaction, or submission of the CAIR designated representative or the finality of any decision or order by the director or the administrator under the CAIR NOx ozone season trading program.

(3) Neither the director nor the administrator will adjudicate any private legal dispute concerning the authorization or any representation, action, inaction, or submission of any CAIR designated representative, including private legal disputes concerning the proceeds of CAIR NOx ozone season allowance transfers.

(F) Delegation by CAIR designated representative and alternate CAIR designated representative.

(1) A CAIR designated representative may delegate, to one or more natural persons, the authority to make an electronic submission to the administrator provided for or required under this rule.

(2) An alternate CAIR designated representative may delegate, to one or more natural persons, his or her authority to make an electronic submission to the administrator provided for or required under this rule.

(3) In order to delegate authority to make an electronic submission to the administrator in accordance with paragraph (F)(1) or (F)(2) of this rule, the CAIR designated representative or alternate CAIR designated representative, as appropriate, must submit to the administrator a notice of delegation, in a format prescribed by the administrator, that includes the following elements:

(a) The name, address, e-mail address, telephone number, and facsimile transmission number (if any) of such CAIR designated representative or alternate CAIR designated representative.

(b) The name, address, e-mail address, telephone number, and facsimile transmission number (if any) of each such natural person (referred to as an "agent").

(c) For each such natural person, a list of the type or types of electronic submissions under paragraph (F)(1) or (F)(2) of this rule for which authority is delegated to each person.

(d) The following certification statements by such CAIR designated representative or alternate CAIR designated representative:

(i) "I agree that any electronic submission to the administrator that is by an agent identified in this notice of delegation and of a type listed for such agent in this notice of delegation and that is made when I am a CAIR designated representative or alternate CAIR designated representative, as appropriate, and before this notice of delegation is superseded by another notice of delegation under 40 CFR 96.315(d) shall be deemed to be an electronic submission by me."

(ii) "Until this notice of delegation is superseded by another notice of delegation under 40 CFR 96.315(d), I agree to maintain an e-mail account and to notify the administrator immediately of any change in my e-mail address unless all delegation of authority by me under 40 CFR 96.315 is terminated."

(4) A notice of delegation submitted under paragraph (F)(3) of this rule shall be effective, with regard to the CAIR designated representative or alternate CAIR designated representative identified in such notice, upon receipt of such notice by the administrator and until receipt by the administrator of a superseding notice of delegation submitted by such CAIR designated representative or alternate CAIR designated representative, as appropriate. The superseding notice of delegation may replace any previously identified agent, add a new agent, or eliminate entirely any delegation of authority.

(5) Any electronic submission covered by the certification in paragraph (F)(3)(d)(i) of this rule and made in accordance with a notice of delegation effective under

paragraph (F)(4) of this rule shall be deemed to be an electronic submission by the CAIR designated representative or alternate CAIR designated representative submitting such notice of delegation.

Effective: 11/14/2013

R.C. 119.032 review dates: 08/29/2013 and 11/14/2018

CERTIFIED ELECTRONICALLY
Certification

11/04/2013
Date

Promulgated Under: 119.03
Statutory Authority: 3704.03(E)
Rule Amplifies: 3704.03(A), 3704.03(E), 3704.03(V)
Prior Effective Dates: 09/27/07

3745-109-16 **CAIR NOx ozone season source permits.**

[Comment: For dates of non-regulatory government publications, publications of recognized organizations and associations, federal rules, and federal statutory provisions referenced in this rule, see paragraph (H) of rule 3745-109-01 of the Administrative Code titled "Referenced materials."]

(A) General CAIR ozone season trading program permit requirements.

(1) For each CAIR NOx ozone season source required to have a Title V operating permit or required, under rule 3745-109-21 of the Administrative Code, to have an operating permit or other federally enforceable permit, such permit shall include a CAIR permit administered by the director for the Title V operating permit or the federally enforceable permit as applicable. The CAIR portion of the Title V permit or other federally enforceable permit as applicable shall be administered in accordance with the director's Title V operating permits regulations promulgated under 40 CFR Part 70 or 71 or the director's regulations for other federally enforceable permits as applicable, except as provided otherwise by paragraph (D) of rule 3745-109-01, this rule, and rule 3745-109-21 of the Administrative Code.

(2) Each CAIR permit shall contain, with regard to the CAIR NOx ozone season source and the CAIR NOx ozone season units at the source covered by the CAIR permit, all applicable CAIR NOx ozone season trading program, CAIR NOx annual trading program, and CAIR SO2 trading program requirements and shall be a complete and separable portion of the Title V operating permit or other federally enforceable permit under paragraph (A)(1) of this rule.

(B) Submission of CAIR permit applications.

(1) Duty to apply. The CAIR designated representative of any CAIR NOx ozone season source required to have a Title V operating permit shall submit to the director a complete CAIR permit application under paragraph (C) of this rule for the source covering each CAIR NOx ozone season unit at the source at least twelve months (or such lesser time provided by the director) before the later of January 1, 2009 or the date on which the CAIR NOx ozone season unit commences commercial operation, except as provided in paragraph (D)(1) of rule 3745-109-21 of the Administrative Code.

(2) Duty to Reapply. For a CAIR NOx ozone season source required to have a Title V operating permit, the CAIR designated representative shall submit a complete CAIR permit application under paragraph (C) of this rule for the source covering each CAIR NOx ozone season unit at the source to renew the CAIR permit in accordance with the director's Title V operating permits regulations addressing

permit renewal, except as provided in paragraph (D)(2) of rule 3745-109-21 of the Administrative Code.

(C) Information requirements for CAIR permit applications.

A complete CAIR permit application shall include the following elements concerning the CAIR NOx ozone season source for which the application is submitted, in a format prescribed by the director:

(1) Identification of the CAIR NOx ozone season source.

(2) Identification of each CAIR NOx ozone season unit at the CAIR NOx ozone season source.

(3) The standard requirements under paragraph (E) of rule 3745-109-01 of the Administrative Code.

(D) CAIR permit contents and term.

(1) Each CAIR permit shall contain, in a format prescribed by the director, all elements required for a complete CAIR permit application under paragraph (C) of this rule.

(2) Each CAIR permit is deemed to incorporate automatically the definitions of terms under paragraph (B) of rule 3745-109-01 of the Administrative Code and, upon recordation by the administrator under rules 3745-109-18, 3745-109-19 or 3745-109-21 of the Administrative Code, every allocation, transfer, or deduction of a CAIR NOx ozone season allowance to or from the compliance account of the CAIR NOx ozone season source covered by the permit.

(3) The term of the CAIR permit shall be set by the director, as necessary to facilitate coordination of the renewal of the CAIR permit with issuance, revision, or renewal of the CAIR NOx ozone season source's Title V operating permit or other federally enforceable permit as applicable.

(E) CAIR permit revisions.

Except as provided in paragraph (D) of this rule, the director shall revise the CAIR permit, as necessary, in accordance with the director's Title V operating permits regulations or the director's regulations for other federally enforceable permits as applicable addressing permit revisions.

Effective: 11/14/2013

R.C. 119.032 review dates: 08/29/2013 and 11/14/2018

CERTIFIED ELECTRONICALLY
Certification

11/04/2013
Date

Promulgated Under: 119.03
Statutory Authority: 3704.03(E)
Rule Amplifies: 3704.03(A), 3704.03(E), 3704.03(V)
Prior Effective Dates: 09/27/07

3745-109-17 **CAIR NOx ozone season allowance allocations.**

[Comment: For dates of non-regulatory government publications, publications of recognized organizations and associations, federal rules, and federal statutory provisions referenced in this rule, see paragraph (H) of rule 3745-109-01 of the Administrative Code titled "Referenced materials."]

(A) State trading budget.

The state trading budget in Ohio for annual allocations of CAIR NOx ozone season allowances for the control periods in 2009 to 2014 is forty-five thousand six hundred sixty four tons and in 2015 and thereafter is thirty-nine thousand nine hundred forty-five tons for units under paragraphs (C)(1), (C)(2), (C)(3) and (C)(5) of rule 3745-109-01 of the Administrative Code (EGUs); for units under paragraph (C)(4) of rule 3745-109-01 of the Administrative Code, CAIR NOx ozone season allowances for control periods 2009 and thereafter are four thousand thirty tons (non-EGUs).

(B) Timing requirements for CAIR NOx ozone season allowance allocations.

(1) No later than September 30, 2007, the director shall submit to the administrator the CAIR NOx ozone season allowance allocations, in a format prescribed by the administrator and in accordance with paragraphs (C)(1) and (C)(2) of this rule, for the control periods in 2009, 2010, 2011, 2012, 2013 and 2014.

(2) Existing units.

By October 31, 2009 and October thirty-first every six years thereafter, the director shall submit to the administrator the CAIR NOx ozone season allowance allocations, in a format prescribed by the administrator and in accordance with paragraphs (C)(1) and (C)(2) of this rule, for the control periods six years, seven years, eight years, nine years, ten years and eleven years after the year of the applicable deadline for submission under this paragraph.

(3) New units.

By July 31, 2009 and July thirty-first of each year thereafter, the director shall submit to the administrator the CAIR NOx ozone season allowance allocations, in a format prescribed by the administrator and in accordance with paragraphs (C)(1), (C)(3) and (C)(4) of this rule, for the control period in the year of the applicable deadline for submission under this paragraph.

(C) CAIR NOx ozone season allowance allocations.

(1) Heat inputs to be used for existing units.

(a) The baseline heat input (in mmBtu) used with respect to CAIR NOx ozone season allowance allocations under paragraph (C)(2) of this rule for each CAIR NOx ozone season unit shall be the following:

(i) For units commencing operation before January 1, 2001 the average of the three highest amounts of the unit's adjusted control period heat input for 1998 to 2005, with the adjusted control period heat input for each year calculated as follows:

(a) If the unit is coal-fired during the year, the unit's control period heat input for such year is multiplied by one hundred per cent.

(b) If the unit is oil-fired during the year, the unit's control period heat input for such year is multiplied by sixty per cent.

(c) If the unit is not subject to paragraph (C)(1)(a)(i)(a) or (C)(1)(a)(i)(b) of this rule, the unit's control period heat input for such year is multiplied by forty per cent.

(d) If the unit is a non-EGU, as applicable to units identified by paragraph (C)(4) of rule 3745-109-01 of the Administrative Code, the baseline heat input (in mmBtu) determination in paragraph (C)(1)(a)(i) or (C)(1)(a)(ii) shall not include any adjustments for heat inputs as described in paragraphs (C)(1)(a)(i)(a) to (C)(1)(a)(i)(c) and (C)(1)(b) of this rule.

(ii) For units commencing operation on or after January 1, 2001 and operating each calendar year during a period of three or more consecutive calendar years the average of the three highest amounts of the unit's total converted control period heat input.

(b) Adjusted heat inputs.

(i) A unit's control period heat input, and a unit's status as coal-fired or oil-fired, for a calendar year under paragraph (C)(1)(a)(i) of this rule, and a unit's total tons of NOx emissions during a control period in a calendar year under paragraph (C)(3)(c) of this rule, shall be determined in accordance with 40 CFR Part 75, to the extent the unit was otherwise subject to the requirements of 40 CFR Part 75 for the year, or shall be based on the best available data reported to the director for the unit, to the extent the unit was not otherwise subject to the requirements of 40 CFR Part 75 for the year.

(ii) A unit's converted control period heat input for a calendar year specified under paragraph (C)(1)(a)(ii) of this rule equals one of the following:

(a) Except as provided in paragraph (C)(1)(b)(ii)(b) or (C)(1)(b)(ii)(c) of this rule, the control period gross electrical output of the generator or generators served by the unit multiplied by seven thousand nine hundred Btu per kWh, if the unit is coal-fired for the year, or six thousand six hundred seventy-five Btu per kWh, if the unit is not coal-fired for the year, and divided by one million Btu per mmBtu, provided that if a generator is served by two or more units, then the gross electrical output of the generator will be attributed to each unit in proportion to the unit's share of the total control period heat input of such units for the year.

(b) For a unit that is a boiler and has equipment used to produce electricity and useful thermal energy for industrial, commercial, heating, or cooling purposes through the sequential use of energy, the total heat energy (in Btu) of the steam produced by the boiler during the control period, divided by 0.8 and by one million Btu per mmBtu.

(c) For a unit that is a combustion turbine and has equipment used to produce electricity and useful thermal energy for industrial, commercial, heating, or cooling purposes through the sequential use of energy, the

control period gross electrical output of the enclosed device comprising the compressor, combustor, and turbine multiplied by three thousand four hundred thirteen Btu per kWh, plus the total heat energy of the steam produced by any associated heat recovery steam generator during the control period divided by 0.8, and with the sum divided by one million Btu per mmBtu.

(2) Adjusted allocations.

(a) For each control period in 2009 and thereafter, the director shall allocate to all CAIR NOx ozone season units in the state that have a baseline heat input (as determined under paragraph (C)(1) of this rule) a total amount of CAIR NOx ozone season allowances equal to ninety-three per cent for a control period during 2009 to 2014, and ninety-five per cent for a control period during 2015 and thereafter, of the tons of NOx emissions in the state trading budget under paragraph (A) of this rule (except as provided in paragraph (C)(4) of this rule) for units under paragraph (C)(1) of rule 3745-109-01 of the Administrative Code (EGUs).

(b) For each control period in 2009 and thereafter, the director shall allocate to all CAIR NOx ozone season units in the state that have a baseline heat input (as determined under paragraph (C)(1) of this rule) a total amount of CAIR NOx ozone season allowances equal to ninety-five per cent for a control period during 2009 to 2014, and ninety-seven per cent for a control period

during 2015 and thereafter, of the tons of NOx emissions in the state trading budget under paragraph (A) of this rule (except as provided in paragraph (C)(4) of this rule) for units under paragraph (C)(4) of rule 3745-109-01 of the Administrative Code (non-EGUs).

The director shall allocate separately, the available allowances for the above control periods, each portion of the state trading budget under paragraph (A) of this rule for EGUs and non-EGUs.

(c) The director shall allocate CAIR NOx ozone season allowances to each CAIR NOx ozone season unit under paragraph (C)(2)(a) of this rule in an amount determined by multiplying the total amount of CAIR NOx ozone season allowances allocated under paragraph (C)(2)(a) of this rule by the ratio of the baseline heat input of such CAIR NOx ozone season unit to the total amount of baseline heat input of all such CAIR NOx ozone season units in the state and rounding to the nearest whole allowance as appropriate.

(d) The director shall allocate CAIR NOx ozone season allowances to each CAIR NOx ozone season unit under paragraph (C)(2)(b) of this rule in an amount equaling the lesser of 0.17 pound per mmBtu or the unit's most stringent state or federal NOx emission limitation multiplied by the baseline heat input of such CAIR NOx ozone season unit determined under paragraph (C)(1)(a)(i)(d) of this rule, divided by two thousand pounds per ton, and rounding to the nearest whole allowance as appropriate.

(e) If the initial total number of CAIR NOx ozone season allowances allocated to all CAIR NOx ozone season units under paragraph (C)(4) of rule 3745-109-01 of the Administrative Code (non-EGUs) for a control period under paragraph (C)(2)(b) of this rule exceeds the total amount of the CAIR NOx ozone season allowances available under paragraph (C)(2)(b) of this rule covering such units, the director shall adjust the total number of CAIR NOx ozone season allowances allocated to all such CAIR NOx ozone season units for the control period under paragraph (C)(2)(b) of this rule so that the total number of CAIR NOx ozone season allowances allocated equals the total amount of the CAIR NOx ozone season allowances available under paragraph (C)(2)(b) of this rule covering such units. This adjustment shall be made by multiplying each unit's allocation by the amount of the CAIR NOx ozone season allowances available under paragraph (C)(2)(b) of this rule covering such units, dividing by the total number of CAIR NOx ozone season allowances allocated under paragraph (C)(2)(d) of this rule, and rounding to the nearest whole CAIR NOx ozone season allowance as appropriate.

(f) If the initial total number of CAIR NOx ozone season allowances allocated to all CAIR NOx ozone season units under paragraph (C)(4) of rule 3745-109-

01 of the Administrative Code (non-EGUs) for a control period under paragraph (C)(2)(b) of this rule is less than the total amount of the CAIR NOx ozone season allowances available under paragraph (C)(2)(b) of this rule covering such units, any such unallocated CAIR NOx ozone season allowances will be placed into an account controlled by the state of Ohio. The director of Ohio EPA shall determine if any such unallocated CAIR NOx ozone season allowances will be retired, distributed, stored or used for whatever purpose the director deems necessary.

(3) For each control period in 2009 and thereafter, the director shall allocate CAIR NOx ozone season allowances to CAIR NOx ozone season units in the state that are not allocated CAIR NOx Ozone Season allowances under paragraph (C)(2)(a) of this rule because the units do not yet have a baseline heat input under paragraph (C)(1)(a) of this rule or because the units have a baseline heat input but all CAIR NOx ozone season allowances available under paragraph (C)(2)(a) of this rule for the control period are already allocated, in accordance with the following procedures:

(a) The director shall establish a separate new unit set-aside for each control period. Each new unit set-aside shall be allocated CAIR NOx ozone season allowances equal to five per cent for the control periods in 2009 to 2014, and three per cent for control periods in 2015 and thereafter, of the amount of tons of NOx emissions in the state trading budget for both EGUs and non-EGUs under paragraph (A) of this rule (EGUs and non-EGUs will have separate new unit set-asides established using the amount of tons of NOx emissions available in their respective portions of the state trading budgets under paragraph (A) of this rule).

(b) The CAIR designated representative of such a CAIR NOx ozone season unit may submit to the director a request, in a format specified by the director, to be allocated CAIR NOx ozone season allowances, starting with the later of the control period in 2009 or the first control period after the control period in which the CAIR NOx ozone season unit commences commercial operation and until the first control period for which the unit is allocated CAIR NOx ozone season allowances under paragraph (C)(2) of this rule. A separate CAIR NOx ozone season allowance allocation request for each control period for which CAIR NOx ozone season allowances are sought must be submitted on or before February first before such control period and after the date on which the CAIR NOx ozone season unit commences commercial operation.

(c) In a CAIR NOx ozone season allowance allocation request under paragraph (C)(3)(b) of this rule, the CAIR designated representative may request for a control period CAIR NOx ozone season allowances in an amount not exceeding the CAIR NOx ozone season unit's total tons of NOx emissions during the control period immediately before such control period.

(d) The director shall review each CAIR NOx ozone season allowance allocation request under paragraph (C)(3)(b) of this rule and shall allocate CAIR NOx ozone season allowances for each control period pursuant to such request as follows:

(i) The director shall accept an allowance allocation request only if the request meets, or is adjusted by the director as necessary to meet, the requirements of paragraphs (C)(3)(b) and (C)(3)(c) of this rule.

(ii) On or after February first before the control period, the director shall determine the sum of the CAIR NOx ozone season allowances requested (as adjusted under paragraph (C)(3)(d)(i) of this rule) in all allowance allocation requests accepted under paragraph (C)(3)(d)(i) of this rule for the control period.

(iii) If the amount of CAIR NOx ozone season allowances in the new unit set-aside for the control period is greater than or equal to the sum under paragraph (C)(3)(d)(ii) of this rule, then the director shall allocate the amount of CAIR NOx
ozone season allowances requested (as adjusted under paragraph (C)(3)(d)(i) of this rule) to each CAIR NOx ozone season unit covered by an allowance allocation request accepted under paragraph (C)(3)(d)(i) of this rule.

(iv) If the amount of CAIR NOx ozone season allowances in the new unit set-aside for the control period is less than the sum under paragraph (C)(3)(d)(ii) of this rule, then the director shall allocate to each CAIR NOx ozone season unit covered by an allowance allocation request accepted under paragraph (C)(3)(d)(i) of this rule the amount of the CAIR NOx ozone season allowances requested (as adjusted under paragraph (C)(3)(d)(i) of this rule), multiplied by the number of CAIR NOx ozone season allowances in the new unit set-aside for the control period, divided by the sum determined under paragraph (C)(3)(d)(ii) of this rule, and rounded to the nearest whole allowance as appropriate.

(v) The director shall notify each CAIR designated representative that submitted an allowance allocation request of the amount of CAIR NOx ozone season allowances, if any, allocated for the control period to the CAIR NOx ozone season unit covered by the request.

[Comment: As stated in paragraph (C)(3) of this rule, units commencing operation on or after January 1, 2001 and lacking a baseline heat input because of insufficient heat input data availability, as stated in paragraph (C)(1)(a)(ii) of this rule, shall be allocated allowances from the new unit set-aside. The unit will continue to be

allocated allowances from the new unit set-aside, even if the unit has sufficient heat input data for determination of a baseline until such time as the director has determined new allowance allocations from the state trading budget under paragraph (A) of this rule, for all units in the state with a baseline heat input based on the timing requirements in paragraph (B) of this rule.]

(4) If, after completion of the procedures under paragraph (C)(3)(d) of this rule for a control period, any unallocated CAIR NOx ozone season allowances remain in the new unit set-aside for the control period, the director shall allocate to each CAIR NOx ozone season unit that was allocated CAIR NOx ozone season allowances under paragraph (C)(2) of this rule an amount of CAIR NOx ozone season allowances equal to the total amount of such remaining unallocated CAIR NOx ozone season allowances, multiplied by the unit's allocation under paragraph (C)(2) of this rule, divided by ninety-five per cent for a control period during 2009 to 2014, and ninety-seven per cent for a control period during 2015 and thereafter, of the amount of tons of NOx emissions in the state trading budget under paragraph (A) of rule 3745-109-17 of the Administrative Code, and rounded to the nearest whole allowance as appropriate.

(5) The director shall establish an allocation set-aside for each control period beginning in 2009 for energy efficiency/renewable energy projects. Each energy efficiency/renewable energy project set-aside shall be allocated CAIR NOx ozone season allowances equal to one per cent of the tons of NOx emissions in the state trading budget under paragraph (A) of this rule, as applicable to units identified by paragraph (C)(1) of rule 3745-109-01 of the Administrative Code (EGUs only), rounded to the nearest whole NOx allowance as appropriate.

(a) Applicants may submit a proposal to the director for an energy efficiency/renewable energy project and request allocations from the energy efficiency/renewable energy project set-aside for energy reductions obtained as a result of the project. The director shall review proposals based on criteria determined by the director, and notify applicants of approved projects. Proposals must contain the following:

(i) A detailed description of the project.

(ii) An estimate of the number of allocations that will be requested.

(iii) The director will calculate the number of NOx allowances requested for each approved project based on the energy savings or NOx emissions reduced by the project. By March first of each year, the director will determine the total number of NOx allowances to be reserved for approved projects. If the total number of NOx allowances requested for approved projects is less than or equal to the number of NOx allowances in the designated set-aside, the number of allowances

requested will be reserved for each approved project. If more NOx allowances are requested than exist in the set-aside, allowances will be reserved on a pro-rated basis based on the number of allowances available. Approved projects requesting only one NOx allowance will not be pro-rated.

(b) To receive allocations for the energy efficiency/renewable energy projects approved by the director, the applicant must submit a completed project report that verifies that the project was completed as proposed and that proposed energy reductions were obtained.

(c) Upon verification of the project's success, the director shall award the required allocations to the applicant.

(d) Allocations shall be awarded on an annual basis and for no more than five consecutive years for each approved energy efficiency/renewable energy project.

(6) The director shall establish an allocation set-aside for each control period beginning in 2009 for innovative technology projects. Each innovative technology project set-aside shall be allocated CAIR NOx ozone season allowances equal to one per cent of the tons of NOx emissions in the state trading budget under paragraph (A) of this rule, as applicable to units identified by paragraph (C)(1) of rule 3745-109-01 of the Administrative Code (EGUs only), rounded to the nearest whole NOx allowance as appropriate.

(a) Applicants may submit a proposal to the director for an innovative technology project and request allocations from the innovative technology project set-aside for NOx emissions reductions or energy reductions obtained. The director shall review proposals based on criteria determined by the director, and notify applicants of approved projects. Proposals must contain the following:

(i) A detailed description of the project.

(ii) An estimate of the number of allocations that will be requested.

(iii) The director will calculate the number of NOx allowances requested for each approved project based on the energy savings or NOx emissions reduced by the project. By March first of each year, the director will determine the total number of NOx allowances to be reserved for approved projects. If the total number of NOx allowances requested for approved projects is less than or equal to the number of NOx allowances in the designated set-aside, the number of allowances requested will be reserved for each approved project. If more NOx allowances are requested than exist in the set-aside, allowances will be

reserved on a pro-rated basis based on the number of allowances available. Approved projects requesting only one NOx allowance will not be pro-rated.

(b) To receive allocations for the innovative technology projects approved by the director, the applicant shall submit a completed project report that verifies that the project was completed as proposed and that proposed NOx emissions reductions or energy reductions were obtained.

(c) Upon verification of the project's success, the director shall award the required allocations to the applicant.

(d) Allocations shall be awarded on an annual basis and for no more than five consecutive years for each approved innovative technology project.

(7) Allowances remaining at the end of each year in the energy efficiency/renewable energy allocation set-aside or in the innovative technology project allocation set-aside, shall be allocated to CAIR NOx ozone season units under paragraph (C)(1) of rule 3745-109-01 of the Administrative Code (EGUs) in the following year, prorated on the basis of each unit's previous year allocations.

(8) The director, beginning with the end of the 2009 CAIR NOx ozone season control period and every three years thereafter, will review the number of the allowances requested for approved projects for the control period from both the energy efficiency/renewable energy allocation set-aside and the innovative technology project allocation set-aside, and compare that number to each currently available set-aside. If the number of allowances requested for approved projects exceeds the available allowance set-aside by more than twenty-five per cent for either set-aside, the director shall adjust each set-aside upward as necessary at the first control period available after such time as the director has determined new allowance allocations from the state trading budget under paragraph (A) of this rule, as applicable to units identified by paragraph (C)(1) of rule 3745-109-01 of the Administrative Code (EGUs), in the state with a baseline heat input based on the timing requirements in paragraph (B) of this rule, but up to a maximum of five per cent for the energy efficiency/renewable energy set-aside or the innovative technology project set aside.

[Comment: If the energy efficiency/renewable energy or the innovative technology project set-aside(s) are proposed to be increased, as outlined above, during a new allowance allocation cycle based on the timing requirements in paragraph (B) of this rule as applicable to units identified by paragraph (C)(1) of rule 3745-109-01 of the Administrative Code (EGUs), then the available allowances from the state budget for allocation to units identified by paragraph (C)(1) of rule 3745-109-01 of the Administrative Code, will be reduced by an amount equal to the difference between the existing set-aside amount and the

new set-aside amount. In 2015 and beyond, the new unit side aside for EGUs is fixed at three per cent, so any increase in the energy efficiency/renewable energy or innovative technology set-aside, should that occur, is the only variable that could decrease the existing unit's allocation amount.]

Effective: 11/14/2013

R.C. 119.032 review dates: 08/29/2013 and 11/14/2018

CERTIFIED ELECTRONICALLY
Certification

11/04/2013
Date

Promulgated Under: 119.03
Statutory Authority: 3704.03(E)
Rule Amplifies: 3704.03(A), 3704.03(E), 3704.03(V)
Prior Effective Dates: 09/27/07, 07/16/09

3745-109-18 **CAIR NOx ozone season allowance tracking system.**

(A) Establishment of accounts.

(1) Compliance accounts. Except as provided in paragraph (E)(5) of rule 3745-109-21 of the Administrative Code, upon receipt of a complete certificate of representation under paragraph (D) of rule 3745-109-15 of the Administrative Code, the administrator shall establish a compliance account for the CAIR NOx ozone season source for which the certificate of representation was submitted, unless the source already has a compliance account.

(2) General accounts.

(a) Application for general account.

(i) Any person may apply to open a general account for the purpose of holding and transferring CAIR NOx ozone season allowances. An application for a general account may designate one and only one CAIR authorized account representative and one and only one alternate CAIR authorized account representative who may act on behalf of the CAIR authorized account representative. The agreement by which the alternate CAIR authorized account representative is selected shall include a procedure for authorizing the alternate CAIR authorized account representative to act in lieu of the CAIR authorized account representative.

(ii) A complete application for a general account shall be submitted to the administrator and shall include the following elements in a format prescribed by the administrator:

(a) Name, mailing address, e-mail address (if any), telephone number, and facsimile transmission number (if any) of the CAIR authorized account representative and any alternate CAIR authorized account representative.

(b) Organization name and type of organization, if applicable.

(c) A list of all persons subject to a binding agreement for the CAIR authorized account representative and any alternate CAIR authorized account representative to represent their ownership interest with respect to the allowances held in the general account.

(d) The following certification statement by the CAIR authorized account representative and any alternate CAIR authorized account representative: "I certify that I was selected as the CAIR

authorized account representative or the alternate CAIR authorized account representative, as applicable, by an agreement that is binding on all persons who have an ownership interest with respect to allowances held in the general account. I certify that I have all the necessary authority to carry out my duties and responsibilities under the CAIR NOx ozone season trading program on behalf of such persons and that each such person shall be fully bound by my representations, actions, inactions, or submissions and by any order or decision issued to me by the administrator or a court regarding the general account."

(e) The signature of the CAIR authorized account representative and any alternate CAIR authorized account representative and the dates signed.

(iii) Unless otherwise required by the director or the administrator, documents of agreement referred to in the application for a general account shall not be submitted to the director or the administrator. Neither the director nor the administrator shall be under any obligation to review or evaluate the sufficiency of such documents, if submitted.

(b) Authorization of CAIR authorized account representative and alternate CAIR authorized account representative.

(i) Upon receipt by the administrator of a complete application for a general account under paragraph (A)(2)(a) of this rule the following shall occur:

(a) The administrator shall establish a general account for the person or persons for whom the application is submitted.

(b) The CAIR authorized account representative and any alternate CAIR authorized account representative for the general account shall represent and, by his or her representations, actions, inactions, or submissions, legally bind each person who has an ownership interest with respect to CAIR NOx ozone season allowances held in the general account in all matters pertaining to the CAIR NOx ozone season trading program, notwithstanding any agreement between the CAIR authorized account representative or any alternate CAIR authorized account representative and such person. Any such person shall be bound by any order or decision issued to the CAIR authorized account representative or any alternate CAIR authorized account representative by the administrator or a court regarding the general account.

(c) Any representation, action, inaction, or submission by any alternate CAIR authorized account representative shall be deemed to be a representation, action, inaction, or submission by the CAIR authorized account representative.

(ii) Each submission concerning the general account shall be submitted, signed, and certified by the CAIR authorized account representative or any alternate CAIR authorized account representative for the persons having an ownership interest with respect to CAIR NOx ozone season allowances held in the general account. Each such submission shall include the following certification statement by the CAIR authorized account representative or any alternate CAIR authorized account representative: "I am authorized to make this submission on behalf of the persons having an ownership interest with respect to the CAIR NOx ozone season allowances held in the general account. I certify under penalty of law that I have personally examined, and am familiar with, the statements and information submitted in this document and all its attachments. Based on my inquiry of those individuals with primary responsibility for obtaining the information, I certify that the statements and information are to the best of my knowledge and belief true, accurate, and complete. I am aware that there are significant penalties for submitting false statements and information or omitting required statements and information, including the possibility of fine or imprisonment."

(iii) The administrator shall accept or act on a submission concerning the general account only if the submission has been made, signed, and certified in accordance with paragraph (A)(2)(b)(ii) of this rule.

(c) Changing CAIR authorized account representative and alternate CAIR authorized account representative; changes in persons with ownership interest.

(i) The CAIR authorized account representative for a general account may be changed at any time upon receipt by the administrator of a superseding complete application for a general account under paragraph (A)(2)(a) of this rule. Notwithstanding any such change, all representations, actions, inactions, and submissions by the previous CAIR authorized account representative before the time and date when the administrator receives the superseding application for a general account shall be binding on the new CAIR authorized account representative and the persons with an ownership interest with respect to the CAIR NOx ozone season allowances in the general account.

(ii) The alternate CAIR authorized account representative for a general account may be changed at any time upon receipt by the administrator

of a superseding complete application for a general account under paragraph (A)(2)(a) of this rule. Notwithstanding any such change, all representations, actions, inactions, and submissions by the previous alternate CAIR authorized account representative before the time and date when the administrator receives the superseding application for a general account shall be binding on the new alternate CAIR authorized account representative and the persons with an ownership interest with respect to the CAIR NOx ozone season allowances in the general account.

(iii) Ownership change.

(a) In the event a person having an ownership interest with respect to CAIR NOx ozone season allowances in the general account is not included in the list of such persons in the application for a general account, such person shall be deemed to be subject to and bound by the application for a general account, the representation, actions, inactions, and submissions of the CAIR authorized account representative and any alternate CAIR authorized account representative of the account, and the decisions and orders of the administrator or a court, as if the person were included in such list.

(b) Within thirty days following any change in the persons having an ownership interest with respect to CAIR NOx ozone season allowances in the general account, including the addition of a new person, the CAIR authorized account representative or any alternate CAIR authorized account representative shall submit a revision to the application for a general account amending the list of persons having an ownership interest with respect to the CAIR NOx ozone season allowances in the general account to include the change.

(d) Objections concerning CAIR authorized account representative and alternate CAIR authorized account representative.

(i) Once a complete application for a general account under paragraph (A)(2)(a) of this rule has been submitted and received, the administrator shall rely on the application unless and until a superseding complete application for a general account under paragraph (A)(2)(a) of this rule is received by the administrator.

(ii) Except as provided in paragraphs (A)(2)(c)(i) and (A)(2)(c)(ii) of this rule of this section, no objection or other communication submitted to the administrator concerning the authorization, or any representation, action, inaction, or submission of the CAIR authorized account representative or any alternate CAIR authorized account representative

for a general account shall affect any representation, action, inaction, or submission of the CAIR authorized account representative or any alternate CAIR authorized account representative or the finality of any decision or order by the administrator under the CAIR NOx ozone season trading program.

(iii) The administrator will not adjudicate any private legal dispute concerning the authorization or any representation, action, inaction, or submission of the CAIR authorized account representative or any alternate CAIR authorized account representative for a general account, including private legal disputes concerning the proceeds of CAIR NOx ozone season allowance transfers.

(e) Delegation by CAIR authorized account representative and alternate CAIR authorized account representative.

(i) A CAIR authorized account representative may delegate, to one or more natural persons, his or her authority to make an electronic submission to the administrator provided for or required under rules 3745-109-18 and 3745-109-19 of the Administrative Code.

(ii) An alternate CAIR authorized account representative may delegate, to one or more natural persons, his or her authority to make an electronic submission to the administrator provided for or required under rules 3745-109-18 and 3745-109-19 of the Administrative Code.

(iii) In order to delegate authority to make an electronic submission to the administrator in accordance with paragraph (A)(2)(e)(i) or (A)(2)(e)(ii) of this rule, the CAIR authorized account representative or alternate CAIR authorized account representative, as appropriate, must submit to the administrator a notice of delegation, in a format prescribed by the administrator, that includes the following elements:

(a) The name, address, e-mail address, telephone number, and facsimile transmission number (if any) of such CAIR authorized account representative or alternate CAIR authorized account representative.

(b) The name, address, e-mail address, telephone number, and facsimile transmission number (if any) of each such natural person (referred to as an "agent").

(c) For each such natural person, a list of the type or types of electronic submissions under paragraph (A)(2)(e)(i) or (A)(2)(e)(ii) of this rule for which authority is delegated to each person.

(d) The following certification statement by such CAIR authorized account representative or alternate CAIR authorized account representative: "I agree that any electronic submission to the administrator that is by an agent identified in this notice of delegation and of a type listed for such agent in this notice of delegation and that is made when I am a CAIR authorized account representative or alternate CAIR authorized representative, as appropriate, and before this notice of delegation is superseded by another notice of delegation under paragraph (A)(2)(e)(iv) of rule 3745-109-18 of the Administrative Code shall be deemed to be an electronic submission by me."

(e) The following certification statement by such CAIR authorized account representative or alternate CAIR authorized account representative: "Until this notice of delegation is superseded by another notice of delegation under paragraph (A)(2)(e)(iv) of rule 3745-109-18 of the Administrative Code, I agree to maintain an e-mail account and to notify the administrator immediately of any change in my e-mail address unless all delegation of authority by me under paragraph (A)(2)(e) of rule 3745-109-18 of the Administrative Code is terminated."

(iv) A notice of delegation submitted under paragraph (A)(2)(e)(iii) of this rule shall be effective, with regard to the CAIR authorized account representative or alternate CAIR authorized account representative identified in such notice, upon receipt of such notice by the Administrator and until receipt by the administrator of a superseding notice of delegation submitted by such CAIR authorized account representative or alternate CAIR authorized account representative, as appropriate. The superseding notice of delegation may replace any previously identified agent, add a new agent, or eliminate entirely any delegation of authority.

(v) Any electronic submission covered by the certification in paragraph (A)(2)(e)(iii)(d) of this rule and made in accordance with a notice of delegation effective under paragraph (A)(2)(e)(iv) of this rule shall be deemed to be an electronic submission by the CAIR designated representative or alternate CAIR designated representative submitting such notice of delegation.

(3) Account identification. The administrator shall assign a unique identifying number to each account established under paragraph (A)(1) or (A)(2) of this rule.

(B) Responsibilities of CAIR authorized account representative.

Following the establishment of a CAIR NOx ozone season allowance tracking system account, all submissions to the administrator pertaining to the account, including, but not limited to, submissions concerning the deduction or transfer of CAIR NOx ozone season allowances in the account, shall be made only by the CAIR authorized account representative for the account.

(C) Recordation of CAIR NOx ozone season allowance allocations.

(1) By September 30, 2007, the administrator shall record in the CAIR NOx ozone season source's compliance account the CAIR NOx ozone season allowances allocated for the CAIR NOx ozone season units at the source, as submitted by the director in accordance with paragraph (B)(1) of rule 3745-109-17 of the Administrative Code, for the control periods in 2009, 2010, 2011, 2012, 2013, and 2014.

(2) By December 1, 2009, and December first every six years thereafter, the administrator shall record in the CAIR NOx ozone season source's compliance account the CAIR NOx ozone season allowances allocated for the CAIR NOx ozone season units at the source as submitted by the director in accordance with paragraph (B)(2)(a) of rule 3745-109-17 of the Administrative Code, for the control periods in the six years, seven years, eight years, nine years, ten years and eleven years after the year of the applicable deadline for recordation under this paragraph.

(3) Serial numbers for allocated CAIR NOx ozone season allowances. When recording the allocation of CAIR NOx ozone season allowances for a CAIR NOx ozone season unit in a compliance account, the administrator shall assign each CAIR NOx ozone season allowance a unique identification number that will include digits identifying the year of the control period for which the CAIR NOx ozone season allowance is allocated.

(D) Compliance with CAIR NOx ozone season emissions limitation.

(1) Allowance transfer deadline. The CAIR NOx ozone season allowances are available to be deducted for compliance with a source's CAIR NOx ozone season emissions limitation for a control period in a given calendar year only if the CAIR NOx ozone season allowances meet the following:

(a) Were allocated for the control period in the year or a prior year.

(b) Are held in the compliance account as of the allowance transfer deadline for the control period or are transferred into the compliance account by a CAIR NOx ozone season allowance transfer correctly submitted for recordation under paragraphs (A) and (B) of rule 3745-109-19 of the Administrative Code by the allowance transfer deadline for the control period.

(2) Deductions for compliance. Following the recordation, in accordance with paragraph (B) of rule 3745-109-19 of the Administrative Code, of CAIR NOx ozone season allowance transfers submitted for recordation in a source's compliance account by the allowance transfer deadline for a control period, the administrator shall deduct from the compliance account CAIR NOx ozone season allowances available under paragraph (D)(1) of this rule in order to determine whether the source meets the CAIR NOx ozone season emissions limitation for the control period, as follows:

(a) Until the amount of CAIR NOx ozone season allowances deducted equals the number of tons of total NOx emissions, determined in accordance with rule 3745-109-20 of the Administrative Code, from all CAIR NOx ozone season units at the source for the control period.

(b) If there are insufficient CAIR NOx ozone season allowances to complete the deductions in paragraph (D)(2)(a) of this rule, until no more CAIR NOx ozone season allowances available under paragraph (D)(1) of this rule remain in the compliance account.

(3) Identification of allowances deducted.

(a) Identification of CAIR NOx ozone season allowances by serial number. The CAIR authorized account representative for a source's compliance account may request that specific CAIR NOx ozone season allowances, identified by serial number, in the compliance account be deducted for emissions or excess emissions for a control period in accordance with paragraph (D)(2) or (D)(4) of this rule. Such request shall be submitted to the administrator by the allowance transfer deadline for the control period and include, in a format prescribed by the administrator, the identification of the CAIR NOx ozone season source and the appropriate serial numbers.

(b) First-in, first-out. The administrator shall deduct CAIR NOx ozone season allowances under paragraph (D)(2) or (D)(4) of this rule from the source's compliance account, in the absence of an identification or in the case of a partial identification of CAIR NOx ozone season allowances by serial number under paragraph (D)(3)(a) of this rule, on a first-in, first-out (FIFO) accounting basis in the following order:

(i) Any CAIR NOx ozone season allowances that were allocated to the units at the source, in the order of recordation.

(ii) Any CAIR NOx ozone season allowances that were allocated to any entity and transferred and recorded in the compliance account pursuant to rule 3745-109-19 of the Administrative Code, in the order of recordation.

(4) Deductions for excess emissions.

(a) After making the deductions for compliance under paragraph (D)(2) of this rule for a control period in a calendar year in which the CAIR NOx ozone season source has excess emissions, the administrator shall deduct from the source's compliance account an amount of CAIR NOx ozone season allowances, allocated for the control period in the immediately following calendar year, equal to three times the number of tons of the source's excess emissions.

(b) Any allowance deduction required under paragraph (D)(4)(a) of this rule shall not affect the liability of the owners and operators of the CAIR NOx ozone season source or the CAIR NOx ozone season units at the source for any fine, penalty, or assessment, or their obligation to comply with any other remedy, for the same violations, as ordered under the Clean Air Act or applicable state law.

(5) Recordation of deductions. The administrator shall record in the appropriate compliance account all deductions from such an account under paragraph (D)(2) or (D)(4) of this rule and rule 3745-109-21 of the Administrative Code.

(6) Administrator's action on submissions.

(a) The administrator may review and conduct independent audits concerning any submission under the CAIR NOx ozone season trading program and make appropriate adjustments of the information in the submissions.

(b) The administrator may deduct CAIR NOx ozone season allowances from or transfer CAIR NOx ozone season allowances to a source's compliance account based on the information in the submissions, as adjusted under paragraph (D)(6)(a) of this rule, and record such deductions and transfers.

(E) Banking.

(1) CAIR NOx ozone season allowances may be banked for future use or transfer in a compliance account or a general account in accordance with paragraph (E)(2) of this rule.

(2) Any CAIR NOx ozone season allowance that is held in a compliance account or a general account shall remain in such account unless and until the CAIR NOx ozone season allowance is deducted or transferred under paragraphs (D) and (F) of this rule, rule 3745-109-19, or rule 3745-109-21 of the Administrative Code.

(F) Account error.

The administrator may, at the administrator's sole discretion and on his or her own motion, correct any error in any CAIR NOx ozone season allowance tracking system account. Within ten business days of making such correction, the administrator shall notify the CAIR authorized account representative for the account.

(G) Closing of general accounts.

(1) The CAIR authorized account representative of a general account may submit to the administrator a request to close the account, which shall include a correctly submitted allowance transfer under paragraphs (A) and (B) of rule 3745-109-19 of the Administrative Code for any CAIR NOx ozone season allowances in the account to one or more other CAIR NOx ozone season allowance tracking system accounts.

(2) If a general account has no allowance transfers in or out of the account for a twelve-month period or longer and does not contain any CAIR NOx ozone season allowances, the administrator may notify the CAIR authorized account representative for the account that the account shall be closed following twenty business days after the notice is sent. The account shall be closed after the twenty-day period unless, before the end of the twenty-day period, the administrator receives a correctly submitted transfer of CAIR NOx ozone season allowances into the account under paragraphs (A) and (B) of rule 3745-109-19 of the Administrative Code or a statement submitted by the CAIR authorized account representative demonstrating to the satisfaction of the administrator good cause as to why the account should not be closed.

Effective: 11/14/2013

R.C. 119.032 review dates: 08/29/2013 and 11/14/2018

CERTIFIED ELECTRONICALLY
Certification

11/04/2013
Date

Promulgated Under: 119.03
Statutory Authority: 3704.03(E)
Rule Amplifies: 3704.03(A), 3704.03(E), 3704.03(V)
Prior Effective Dates: 09/27/07, 07/16/09

3745-109-19 **CAIR NOx ozone season allowance transfers.**

(A) Submission of CAIR NOx ozone season allowance transfers.

A CAIR authorized account representative seeking recordation of a CAIR NOx ozone season allowance transfer shall submit the transfer to the administrator. To be considered correctly submitted, the CAIR NOx ozone season allowance transfer shall include the following elements, in a format specified by the administrator:

(1) The account numbers for both the transferor and transferee accounts.

(2) The serial number of each CAIR NOx ozone season allowance that is in the transferor account and is to be transferred.

(3) The name and signature of the CAIR authorized account representative of the transferor account and the date signed.

(B) Recordation.

(1) Within five business days (except as provided in paragraph (B)(2) of this rule) of receiving a CAIR NOx ozone season allowance transfer, the administrator shall record a CAIR NOx ozone season allowance transfer by moving each CAIR NOx ozone season allowance from the transferor account to the transferee account as specified by the request, provided the following:

(a) The transfer is correctly submitted under paragraph (A) of this rule.

(b) The transferor account includes each CAIR NOx ozone season allowance identified by serial number in the transfer.

(2) A CAIR NOx ozone season allowance transfer that is submitted for recordation after the allowance transfer deadline for a control period and that includes any CAIR NOx ozone season allowances allocated for any control period before such allowance transfer deadline shall not be recorded until after the administrator completes the deductions under paragraph (D) of rule 3745-109-18 of the Administrative Code for the control period immediately before such allowance transfer deadline.

(3) Where a CAIR NOx ozone season allowance transfer submitted for recordation fails to meet the requirements of paragraph (B)(1) of this rule, the administrator shall not record such transfer.

(C) Notification.

(1) Notification of recordation. Within five business days of recordation of a CAIR NOx ozone season allowance transfer under paragraph (B) of this rule, the administrator shall notify the CAIR authorized account representatives of both the transferor and transferee accounts.

(2) Notification of non-recordation. Within ten business days of receipt of a CAIR NOx ozone season allowance transfer that fails to meet the requirements of paragraph (B)(1) of this rule, the administrator shall notify the CAIR authorized account representatives of both accounts subject to the transfer of the following:

(a) A decision not to record the transfer.

(b) The reasons for such non-recordation.

(3) Nothing in this section shall preclude the submission of a CAIR NOx ozone season allowance transfer for recordation following notification of non-recordation.

Effective: 11/14/2013

R.C. 119.032 review dates: 08/29/2013 and 11/14/2018

CERTIFIED ELECTRONICALLY
Certification

11/04/2013
Date

Promulgated Under: 119.03
Statutory Authority: 3704.03(E)
Rule Amplifies: 3704.03(A), 3704.03(E), 3704.03(V)
Prior Effective Dates: 09/27/07, 07/16/09

3745-109-20 **CAIR NOx ozone season unit monitoring and reporting.**

[Comment: For dates of non-regulatory government publications, publications of recognized organizations and associations, federal rules, and federal statutory provisions referenced in this rule, see paragraph (H) of rule 3745-109-01 of the Administrative Code titled "Referenced materials."]

(A) General requirements.

The owners and operators, and to the extent applicable, the CAIR designated representative, of a CAIR NOx ozone season unit, shall comply with the monitoring, record keeping, and reporting requirements as provided in this rule and in 40 CFR Part 75, Subpart H. For purposes of complying with such requirements, the definitions in paragraph (B) of rule 3745-109-01 of the Administrative Code and in 40 CFR 72.2 shall apply, and the terms affected unit, designated representative, and continuous emission monitoring system (or CEMS) in 40 CFR Part 75 shall be deemed to refer to the terms CAIR NOx ozone season unit, CAIR designated representative, and continuous emission monitoring system (or CEMS) respectively, as defined in paragraph (B) of rule 3745-109-01 of the Administrative Code. The owner or operator of a unit that is not a CAIR NOx ozone season unit but that is monitored under 40 CFR 75.72(b)(2)(ii) shall comply with the same monitoring, record keeping, and reporting requirements as a CAIR NOx ozone season unit.

(1) Requirements for installation, certification, and data accounting. The owner or operator of each CAIR NOx ozone season unit shall do the following:

(a) Install all monitoring systems required under this rule for monitoring NOx mass emissions and individual unit heat input (including all systems required to monitor NOx emission rate, NOx concentration, stack gas moisture content, stack gas flow rate, CO2 or O2 concentration, and fuel flow rate, as applicable, in accordance with 40 CFR 75.71 and 40 CFR 75.72).

(b) Successfully complete all certification tests required under paragraph (B) of this rule and meet all other requirements of this rule and 40 CFR Part 75 applicable to the monitoring systems under paragraph (A)(1)(a) of this rule.

(c) Record, report, and quality-assure the data from the monitoring systems under paragraph (A)(1)(a) of this rule.

(2) Compliance deadlines. Except as provided in paragraph (A)(5) of this rule, the owner or operator shall meet the monitoring system certification and other requirements of paragraphs (A)(1)(a) and (A)(1)(b) of this rule on or before the dates in paragraphs (A)(2)(a) and (A)(2)(b) of this rule. The owner or operator

shall record, report, and quality-assure the data from the monitoring systems under paragraph (A)(1)(a) of this rule on and after the following dates:

(a) For the owner or operator of a CAIR NOx ozone season unit that commences commercial operation before July 1, 2007, by May 1, 2008.

(b) For the owner or operator of a CAIR NOx ozone season unit that commences commercial operation on or after July 1, 2007 and that reports on an annual basis under paragraph (E)(4) of this rule, by the later of the following dates:

(i) Ninety unit operating days or one hundred eighty calendar days, whichever occurs first, after the date on which the unit commences commercial operation.

(ii) May 1, 2008.

(c) For the owner or operator of a CAIR NOx ozone season unit that commences commercial operation on or after July 1, 2007 and that reports on a control period basis under paragraph (E)(4)(b)(ii) of this rule, by the later of the following dates:

(i) Ninety unit operating days or one hundred eighty calendar days, whichever occurs first, after the date on which the unit commences commercial operation.

(ii) If the compliance date under paragraph (A)(2)(c)(i) of this rule is not during a control period, May first immediately following the compliance date under paragraph (A)(2)(c)(i) of this rule.

(d) For the owner or operator of a CAIR NOx ozone season unit for which construction of a new stack or flue or installation of add-on NOx emission controls is completed after the applicable deadline under paragraph (A)(2)(a), (A)(2)(b), (A)(2)(f), or (A)(2)(g) of this rule and that reports on an annual basis under paragraph (E)(4) of this rule, by ninety unit operating days or one hundred eighty calendar days, whichever occurs first, after the date on which emissions first exit to the atmosphere through the new stack or flue or add-on NOx emissions controls.

(e) For the owner or operator of a CAIR NOx ozone season unit for which construction of a new stack or flue or installation of add-on NOx emission controls is completed after the applicable deadline under paragraph (A)(2)(a), (A)(2)(c), (A)(2)(f) or (A)(2)(g) of this rule and that reports on a control period basis under paragraph (E)(4)(b)(ii) of this rule, by the later of the following dates:

(i) Ninety unit operating days or one hundred eighty calendar days, whichever occurs first, after the date on which emissions first exit to the atmosphere through the new stack or flue or add-on NOx emissions controls.

(ii) If the compliance date under paragraph (A)(2)(e)(i) of this rule is not during a control period, May first immediately following the compliance date under paragraph (A)(2)(e)(i) of this rule.

(f) Notwithstanding the dates in paragraphs (A)(2)(a), (A)(2)(b), and (A)(2)(c) of this rule, for the owner or operator of a unit for which a CAIR NOx ozone season opt-in permit application is submitted and not withdrawn and a CAIR opt-in permit is not yet issued or denied under rule 3745-109-21 of the Administrative Code, by the date specified in paragraph (E)(2) of rule 3745-109-21 of the Administrative Code.

(g) Notwithstanding the dates in paragraphs (A)(2)(a), (A)(2)(b), and (A)(2)(c) of this rule, for the owner or operator of a CAIR NOx ozone season opt-in unit under rule 3745-109-21 of the Administrative Code, by the date on which the CAIR NOx ozone season opt-in unit enters the CAIR NOx ozone season trading program as provided in paragraph (E)(7) of rule 3745-109-21 of the Administrative Code.

(3) Reporting data.

The owner or operator of a CAIR NOx ozone season unit that does not meet the applicable compliance date set forth in paragraph (A)(2) of this rule for any monitoring system under paragraph (A)(1)(a) of this rule shall, for each such monitoring system, determine, record, and report maximum potential (or, as appropriate, minimum potential) values for NOx concentration, NOx emission rate, stack gas flow rate, stack gas moisture content, fuel flow rate, and any other parameters required to determine NOx mass emissions and heat input in accordance with 40 CFR 75.31 (b)(2) or (c)(3), 40 CFR Part 75, Appendix D, Section 2.4, or 40 CFR Part 75, Appendix E, Section 2.5, as applicable.

(4) Prohibitions.

(a) No owner or operator of a CAIR NOx ozone season unit shall use any alternative monitoring system, alternative reference method, or any other alternative to any requirement of this rule without having obtained prior written approval in accordance with paragraph (F) of this rule.

(b) No owner or operator of a CAIR NOx ozone season unit shall operate the unit so as to discharge, or allow to be discharged, NOx emissions to the atmosphere without accounting for all such emissions in accordance with the applicable provisions of this rule and 40 CFR Part 75.

(c) No owner or operator of a CAIR NOx ozone season unit shall disrupt the continuous emission monitoring system, any portion thereof, or any other approved emission monitoring method, and thereby avoid monitoring and recording NOx mass emissions discharged into the atmosphere or heat input, except for periods of recertification or periods when calibration, quality assurance testing, or maintenance is performed in accordance with the applicable provisions of this rule and 40 CFR Part 75.

(d) No owner or operator of a CAIR NOx ozone season unit shall retire or permanently discontinue use of the continuous emission monitoring system, any component thereof, or any other approved monitoring system under this rule, except under any one of the following circumstances:

(i) During the period that the unit is covered by an exemption under paragraph (D) of rule 3745-109-01 of the Administrative Code that is in effect.

(ii) The owner or operator is monitoring emissions from the unit with another certified monitoring system approved, in accordance with the applicable provisions of this rule and 40 CFR Part 75, by the director for use at that unit that provides emission data for the same pollutant or parameter as the retired or discontinued monitoring system.

(iii) The CAIR designated representative submits notification of the date of certification testing of a replacement monitoring system for the retired or discontinued monitoring system in accordance with paragraph (B)(4)(c)(i) of this rule.

(5) Long-term cold storage.

The owner or operator of a CAIR NOx ozone season unit is subject to the applicable provisions of 40 CFR Part 75 of this rule concerning units in long-term cold storage.

(B) Initial certification and recertification procedures.

(1) The owner or operator of a CAIR NOx ozone season unit shall be exempt from the initial certification requirements of this section for a monitoring system under paragraph (A)(1)(a) of this rule if the following conditions are met:

(a) The monitoring system has been previously certified in accordance with 40 CFR Part 75.

(b) The applicable quality-assurance and quality-control requirements of 40 CFR 75.21 and 40 CFR Part 75, Appendices B, D and E, are fully met for the certified monitoring system described in paragraph (B)(1)(a) of this rule.

(2) The recertification provisions of this section shall apply to a monitoring system under paragraph (A)(1)(a) of rule 3745-109-20 of the Administrative Code exempt from initial certification requirements under paragraph (B)(1) of this rule.

(3) If the administrator has previously approved a petition under 40 CFR 75.17(a) or (b) for apportioning the NOx emission rate measured in a common stack or a petition under 40 CFR 75.66 for an alternative to a requirement in 40 CFR 75.12 or 40 CFR 75.17, the CAIR designated representative shall resubmit the petition to the administrator under paragraph (F)(1) of this rule to determine whether the approval applies under the CAIR NOx ozone season trading program.

(4) Except as provided in paragraph (B)(1) of this rule, the owner or operator of a CAIR NOx ozone season unit shall comply with the following initial certification and recertification procedures for a continuous monitoring system (i.e., a continuous emission monitoring system and an excepted monitoring system under 40 CFR Part 75, Appendices D and E) under paragraph (A)(1)(a) of this rule. The owner or operator of a unit that qualifies to use the low mass emissions excepted monitoring methodology under 40 CFR 75.19 or that qualifies to use an alternative monitoring system under 40 CFR Part 75, Subpart E shall comply with the procedures in paragraph (B)(5) or (B)(6) of this rule respectively.

(a) Requirements for initial certification. The owner or operator shall ensure that each continuous monitoring system under paragraph (A)(1)(a) of this rule (including the automated data acquisition and handling system) successfully completes all of the initial certification testing required under 40 CFR 75.20 by the applicable deadline in paragraph (A)(2) of this rule. In addition, whenever the owner or operator installs a monitoring system to meet the requirements of this rule in a location where no such monitoring system was previously installed, initial certification in accordance with 40 CFR 75.20 is required.

(b) Requirements for recertification. Whenever the owner or operator makes a replacement, modification, or change in any certified continuous emission monitoring system under paragraph (A)(1)(a) of this rule that may significantly affect the ability of the system to accurately measure or record NOx mass emissions or heat input rate or to meet the quality-assurance and quality-control requirements of 40 CFR 75.21 or 40 CFR Part 75, Appendix B, the owner or operator shall recertify the monitoring system in accordance with 40 CFR 75.20(b). Furthermore, whenever the owner or operator makes a replacement, modification, or change to the flue gas handling system or

the unit's operation that may significantly change the stack flow or concentration profile, the owner or operator shall recertify each continuous emission monitoring system whose accuracy is potentially affected by the change, in accordance with 40 CFR 75.20(b). Examples of changes to a continuous emission monitoring system that require recertification include: replacement of the analyzer, complete replacement of an existing continuous emission monitoring system, or change in location or orientation of the sampling probe or site. Any fuel flowmeter systems, and any excepted NOx monitoring system under 40 CFR Part 75, Appendix E under paragraph (A)(1)(a) of this rule are subject to the recertification requirements in 40 CFR 75.20(g)(6).

(c) Approval process for initial certification and recertification. Paragraphs (B)(4)(c)(i) to (B)(4)(c)(iv) of this rule apply to both initial certification and recertification of a continuous monitoring system under paragraph (A)(1)(a) of this rule. For recertifications, replace the words certification and initial certification with the word recertification, replace the word certified with the word recertified, and follow the procedures in 40 CFR 75.20(b)(5) and 40 CFR 75.20(g)(7) in lieu of the procedures in paragraph (B)(4)(c)(v) of this rule.

(i) Notification of certification. The CAIR designated representative shall submit to the director, USEPA Region 5, and the administrator written notice of the dates of certification testing, in accordance with paragraph (D) of this rule.

(ii) Certification application. The CAIR designated representative shall submit to the director a certification application for each monitoring system. A complete certification application shall include the information specified in 40 CFR 75.63.

(iii) Provisional certification date. The provisional certification date for a monitoring system shall be determined in accordance with 40 CFR 75.20(a)(3). A provisionally certified monitoring system may be used under the CAIR NOx ozone season trading program for a period not to exceed one hundred twenty days after receipt by the director of the complete certification application for the monitoring system under paragraph (B)(4)(c)(ii) of this rule. Data measured and recorded by the provisionally certified monitoring system, in accordance with the requirements of 40 CFR Part 75, shall be considered valid quality assured data (retroactive to the date and time of provisional certification), provided that the director does not invalidate the provisional certification by issuing a notice of disapproval within one hundred twenty days of the date of receipt of the complete certification application by the director.

(iv) Certification application approval process. The director shall issue a written notice of approval or disapproval of the certification application to the owner or operator within one hundred twenty days of receipt of the complete certification application under paragraph (B)(4)(c)(ii) of this rule. In the event the director does not issue such a notice within such one hundred twenty day period, each monitoring system that meets the applicable performance requirements of 40 CFR Part 75 and is included in the certification application shall be deemed certified for use under the CAIR NOx ozone season trading program.

(a) Approval notice. If the certification application is complete and shows that each monitoring system meets the applicable performance requirements of 40 CFR Part 75, then the director shall issue a written notice of approval of the certification application within one hundred twenty days of receipt.

(b) Incomplete application notice. If the certification application is not complete, then the director shall issue a written notice of incompleteness that sets a reasonable date by which the CAIR designated representative must submit the additional information required to complete the certification application. If the CAIR designated representative does not comply with the notice of incompleteness by the specified date, then the director may issue a notice of disapproval under paragraph (B)(4)(c)(iv)(c) of this rule. The one hundred twenty day review period shall not begin before receipt of a complete certification application.

(c) Disapproval notice. If the certification application shows that any monitoring system does not meet the performance requirements of 40 CFR Part 75 or if the certification application is incomplete and the requirement for disapproval under paragraph (B)(4)(c)(iv)(b) of this rule is met, then the director shall issue a written notice of disapproval of the certification application. Upon issuance of such notice of disapproval, the provisional certification is invalidated by the director and the data measured and recorded by each uncertified monitoring system shall not be considered valid quality-assured data beginning with the date and hour of provisional certification (as defined under 40 CFR 75.20(a)(3)). The owner or operator shall follow the procedures for loss of certification in paragraph (B)(4)(c)(v) of this rule for each monitoring system that is disapproved for initial certification.

(d) Audit decertification. The director or, for a CAIR NOx ozone season opt-in unit or a unit for which a CAIR opt-in permit application is submitted and not withdrawn and a CAIR opt-in permit is not yet issued or denied under rule 3745-109-21 of the

Administrative Code, the administrator may issue a notice of disapproval of the certification status of a monitor in accordance with paragraph (C)(2) of this rule.

(v) Procedures for loss of certification. If the director or the administrator issues a notice of disapproval of a certification application under paragraph (B)(4)(c)(iv)(c) of this rule or a notice of disapproval of certification status under paragraph (B)(4)(c)(iv)(d) of this rule, then the following shall occur:

(a) The owner or operator shall substitute the following values, for each disapproved monitoring system, for each hour of unit operation during the period of invalid data specified under 40 CFR 75.20(a)(4)(iii) and 40 CFR 75.20(g)(7) or 40 CFR 75.21(e) and continuing until the applicable date and hour specified under 40 CFR 75.20 (a)(5)(i) or 40 CFR 75.20(g)(7):

(i) For a disapproved NOx emission rate (i.e., NOx-diluent) system, the maximum potential NOx emission rate, as defined in 40 CFR 72.2.

(ii) For a disapproved NOx pollutant concentration monitor and disapproved flow monitor, respectively, the maximum potential concentration of NOx and the maximum potential flow rate, as defined in 40 CFR Part 75, Appendix A, Sections 2.1.2.1 and 2.1.4.1.

(iii) For a disapproved moisture monitoring system and disapproved diluent gas monitoring system, respectively, the minimum potential moisture percentage and either the maximum potential CO2 concentration or the minimum potential oxygen concentration (as applicable), as defined in 40 CFR Part 75, Appendix A, Sections 2.1.3.1, 2.1.3.2, and 2.1.5.

(iv) For a disapproved fuel flowmeter system, the maximum potential fuel flow rate, as defined in 40 CFR Part 75, Appendix D, Section 2.4.2.1.

(v) For a disapproved excepted NOx monitoring system under 40 CFR Part 75, Appendix E, the fuel-specific maximum potential NOx emission rate, as defined in 40 CFR 72.2.

(b) The CAIR designated representative shall submit a notification of certification retest dates and a new certification application in

accordance with paragraphs (B)(4)(c)(i) and (B)(4)(c)(ii) of this rule.

(c) The owner or operator shall repeat all certification tests or other requirements that were failed by the monitoring system, as indicated in the director's or the administrator's notice of disapproval, no later than thirty unit operating days after the date of issuance of the notice of disapproval.

(5) Initial certification and recertification procedures for units using the low mass emission excepted methodology under 40 CFR 75.19. The owner or operator of a unit qualified to use the low mass emissions (LME) excepted methodology under 40 CFR 75.19 shall meet the applicable certification and recertification requirements in 40 CFR 75.19(a)(2) and 40 CFR 75.20(h). If the owner or operator of such a unit elects to certify a fuel flowmeter system for heat input determination, the owner or operator shall also meet the certification and recertification requirements in 40 CFR 75.20(g).

(6) Certification/recertification procedures for alternative monitoring systems. The CAIR designated representative of each unit for which the owner or operator intends to use an alternative monitoring system approved by the administrator and, if applicable, the director under 40 CFR Part 75, Subpart E shall comply with the applicable notification and application procedures of 40 CFR 75.20(f).

(C) Out of control periods.

(1) Whenever any monitoring system fails to meet the quality-assurance and quality-control requirements or data validation requirements of 40 CFR Part 75, data shall be substituted using the applicable missing data procedures in 40 CFR Part 75, Subparts D or H, or 40 CFR Part 75, Appendices D or E.

(2) Audit decertification. Whenever both an audit of a monitoring system and a review of the initial certification or recertification application reveal that any monitoring system should not have been certified or recertified because it did not meet a particular performance specification or other requirement under paragraph (B) of this rule or the applicable provisions of 40 CFR Part 75, both at the time of the initial certification or recertification application submission and at the time of the audit, the director or, for a CAIR NOx ozone season opt-in unit or a unit for which a CAIR opt-in permit application is submitted and not withdrawn and a CAIR opt-in permit is not yet issued or denied under rule 3745-109-21 of the Administrative Code, the administrator shall issue a notice of disapproval of the certification status of such monitoring system. For the purposes of this paragraph, an audit shall be either a field audit or an audit of any information submitted to the director or the administrator. By issuing the notice of disapproval, the director or the administrator revokes prospectively the certification status of the monitoring system. The data measured and recorded by

the monitoring system shall not be considered valid quality-assured data from the date of issuance of the notification of the revoked certification status until the date and time that the owner or operator completes subsequently approved initial certification or recertification tests for the monitoring system. The owner or operator shall follow the applicable initial certification or recertification procedures in paragraph (B) of this rule for each disapproved monitoring system.

(D) Notifications.

The CAIR designated representative for a CAIR NOx ozone season unit shall submit written notice to the director and the administrator in accordance with 40 CFR 75.61.

(E) Record keeping and reporting.

(1) General provisions. The CAIR designated representative shall comply with all record keeping and reporting requirements in this section, the applicable record keeping and reporting requirements under 40 CFR 75.73, and the requirements of paragraph (A)(5)(a) of rule 3745-109-15 of the Administrative Code.

(2) Monitoring plans. The owner or operator of a CAIR NOx ozone season unit shall comply with requirements of 40 CFR 75.73(c) and 40 CFR 75.73(e) and, for a unit for which a CAIR opt-in permit application is submitted and not withdrawn and a CAIR opt-in permit is not yet issued or denied under paragraphs (D) and (E)(1) of rule 3745-109-21 of the Administrative Code.

(3) Certification applications. The CAIR designated representative shall submit an application to the director within forty-five days after completing all initial certification or recertification tests required under paragraph (B) of this rule, including the information required under 40 CFR 75.63.

(4) Quarterly reports. The CAIR designated representative shall submit quarterly reports, as follows:

(a) If the CAIR NOx ozone season unit is subject to an acid rain emissions limitation or a CAIR NOx emissions limitation or if the owner or operator of such unit chooses to report on an annual basis under this rule, the CAIR designated representative shall meet the requirements of 40 CFR Part 75, Subpart H (concerning monitoring of NOx mass emissions) for such unit for the entire year and shall report the NOx mass emissions data and heat input data for such unit, in an electronic quarterly report in a format prescribed by the administrator, for each calendar quarter beginning with the following:

(i) For a unit that commences commercial operation before July 1, 2007, the calendar quarter covering May 1, 2008 to June 30, 2008.

(ii) For a unit that commences commercial operation on or after July 1, 2007, the calendar quarter corresponding to the earlier of the date of provisional certification or the applicable deadline for initial certification under paragraph (A)(2) of this rule, unless that quarter is the third or fourth quarter of 2007 or the first quarter of 2008, in which case reporting shall commence in the quarter covering May 1, 2008 to June 30, 2008.

(iii) Notwithstanding paragraphs (E)(4)(a)(i) and (E)(4)(a)(ii) of this rule, for a unit for which a CAIR opt-in permit application is submitted and not withdrawn and a CAIR opt-in permit is not yet issued or denied under rule 3745-109-21 of the Administrative Code, the calendar quarter corresponding to the date specified in paragraph (E)(2) of rule 3745-109-21 of the Administrative Code.

(iv) Notwithstanding paragraphs (E)(4)(a)(i) and (E)(4)(a)(ii), for a CAIR NOx ozone season opt-in unit under rule 3745-109-21 of the Administrative Code, the calendar quarter corresponding to the date on which the CAIR NOx ozone season opt-in unit enters the CAIR NOx ozone season trading program as provided in paragraph (E)(7) of rule 3745-109-21 of the Administrative Code.

(b) If the CAIR NOx ozone season unit is not subject to an acid rain emissions limitation or a CAIR NOx emissions limitation, then the CAIR designated representative shall meet either of the following:

(i) 40 CFR Part 75, Subpart H (concerning monitoring of NOx mass emissions) for such unit for the entire year and report the NOx mass emissions data and heat input data for such unit in accordance with paragraph (E)(4)(a) of this rule.

(ii) 40 CFR Part 75, Subpart H for the control period (including the requirements in 40 CFR 75.74(c)) and report NOx mass emissions data and heat input data (including the data described in 40 CFR 75.74(c)(6)) for such unit only for the control period of each year and report, in an electronic quarterly report in a format prescribed by the administrator, for each calendar quarter beginning with the following:

(a) For a unit that commences commercial operation before July 1, 2007, the calendar quarter covering May 1, 2008 to June 30, 2008.

(b) For a unit that commences commercial operation on or after July 1, 2007, the calendar quarter corresponding to the earlier of the date of provisional certification or the applicable deadline for initial certification under paragraph (A)(2) of this rule, unless that date is not during a control period, in which case reporting shall

commence in the quarter that includes May first to June thirtieth of the first control period after such date.

(c) Notwithstanding paragraphs (E)(4)(b)(ii)(a) and (E)(4)(b)(ii)(b) of this rule, for a unit for which a CAIR opt-in permit application is submitted and not withdrawn and a CAIR opt-in permit is not yet issued or denied under rule 3745-109-21 of the Administrative Code, the calendar quarter corresponding to the date specified in paragraph (E)(2) of rule 3745-109-21 of the Administrative Code.

(d) Notwithstanding paragraphs (E)(4)(b)(ii)(a) and (E)(4)(b)(ii)(b) of this rule, for a CAIR NOx ozone season opt-in unit under subpart IIII of this part, the calendar quarter corresponding to the date on which the CAIR NOx ozone season opt-in unit enters the CAIR NOx ozone season trading program as provided in paragraph (E)(7) of rule 3745-109-21 of the Administrative Code.

(c) The CAIR designated representative shall submit each quarterly report to the administrator within thirty days following the end of the calendar quarter covered by the report. Quarterly reports shall be submitted in the manner specified in 40 CFR 75.73(f).

(d) For CAIR NOx ozone season units that are also subject to an acid rain emissions limitation or the CAIR NOx annual trading program or CAIR SO2 trading program, or Hg budget trading program, quarterly reports shall include the applicable data and information required by 40 CFR Part 75, Subparts F to I, as applicable, in addition to the NOx mass emission data, heat input data, and other information required by this rule.

(5) Compliance certification. The CAIR designated representative shall submit to the administrator a compliance certification (in a format prescribed by the administrator) in support of each quarterly report based on reasonable inquiry of those persons with primary responsibility for ensuring that all of the unit's emissions are correctly and fully monitored. The certification shall state the following:

(a) The monitoring data submitted were recorded in accordance with the applicable requirements of this rule and 40 CFR Part 75, including the quality assurance procedures and specifications.

(b) For a unit with add-on NOx emission controls and for all hours where NOx data are substituted in accordance with 40 CFR 75.34(a)(1), the add-on emission controls were operating within the range of parameters listed in the quality assurance/quality control program under 40 CFR Part 75, Appendix B and the substitute data values do not systematically underestimate NOx emissions.

(c) For a unit that is reporting on a control period basis under paragraph (E)(4)(b)(ii) of this rule, the NOx emission rate and NOx concentration values substituted for missing data under 40 CFR Part 75, Subpart D are calculated using only values from a control period and do not systematically underestimate NOx emissions.

(F) Petitions.

(1) Except as provided in paragraph (F)(2)(a) of this rule, the CAIR designated representative of a CAIR NOx ozone season unit that is subject to an acid rain emissions limitation may submit a petition under 40 CFR 75.66 to the administrator requesting approval to apply an alternative to any requirement of this rule. Application of an alternative to any requirement of this rule is in accordance with this rule only to the extent that the petition is approved in writing by the administrator, in consultation with the director.

(2) Petition process.

(a) The CAIR designated representative of a CAIR NOx ozone season unit that is not subject to an acid rain emissions limitation may submit a petition under 40 CFR 75.66 to the director and the administrator requesting approval to apply an alternative to any requirement of this rule. Application of an alternative to any requirement of this subpart is in accordance with this rule only to the extent that the petition is approved in writing by both the director and the administrator.

(b) The CAIR designated representative of a CAIR NOx ozone season unit that is subject to an acid rain emissions limitation may submit a petition under 40 CFR 75.66 to the director and the administrator requesting approval to apply an alternative to a requirement concerning any additional continuous emission monitoring system required under 40 CFR 75.72. Application of an alternative to any such requirement is in accordance with this rule only to the extent that the petition is approved in writing by both the director and the administrator.

Effective: 11/14/2013

R.C. 119.032 review dates: 08/29/2013 and 11/14/2018

CERTIFIED ELECTRONICALLY
Certification

11/04/2013
Date

Promulgated Under: 119.03
Statutory Authority: 3704.03(E)
Rule Amplifies: 3704.03(A), 3704.03(E), 3704.03(V)
Prior Effective Dates: 09/27/07, 07/16/09

3745-109-21 **CAIR NOx ozone season opt-in units.**

[Comment: For dates of non-regulatory government publications, publications of recognized organizations and associations, federal rules, and federal statutory provisions referenced in this rule, see paragraph (H) of rule 3745-109-01 of the Administrative Code titled "Referenced materials."]

(A) Applicability.

A CAIR NOx ozone season opt-in unit must be a unit that meets the following:

(1) Is located in the state.

(2) Is not a CAIR NOx ozone season unit under paragraph (C) of rule 3745-109-01 of the Administrative Code and is not covered by a retired unit exemption under paragraph (D) of rule 3745-109-01 of the Administrative Code that is in effect.

(3) Is not covered by a retired unit exemption under 40 CFR 72.8 that is in effect.

(4) Has or is required or qualified to have a Title V operating permit or other federally enforceable permit.

(5) Vents all of its emissions to a stack and can meet the monitoring, record keeping, and reporting requirements of rule 3745-109-20 of the Administrative Code.

(B) General requirements.

(1) Except as otherwise provided in paragraphs (A) to (C) and (E) to (G) of rule 3745-109-01 of the Administrative Code, and rules 3745-109-15, 3745-109-16, 3745-109-18, 3745-109-19 and 3745-109-20 of the Administrative Code, a CAIR NOx ozone season opt-in unit shall be treated as a CAIR NOx ozone season unit for purposes of applying such paragraphs and rules.

(2) Solely for purposes of applying, as provided in this rule, the requirements of rule 3745-109-20 of the Administrative Code to a unit for which a CAIR opt-in permit application is submitted and not withdrawn and a CAIR opt-in permit is not yet issued or denied under this rule, such unit shall be treated as a CAIR NOx ozone season unit before issuance of a CAIR opt-in permit for such unit.

(C) CAIR designated representative.

Any CAIR NOx ozone season opt-in unit, and any unit for which a CAIR opt-in permit application is submitted and not withdrawn and a CAIR opt-in permit is not yet issued or denied under this rule, located at the same source as one or more CAIR NOx ozone season units shall have the same CAIR designated representative and alternate CAIR designated representative as such CAIR NOx ozone season units.

(D) Applying for CAIR opt-in permit.

(1) Applying for initial CAIR opt-in permit. The CAIR designated representative of a unit meeting the requirements for a CAIR NOx ozone season opt-in unit in paragraph (A) of this rule may apply for an initial CAIR opt-in permit at any time, except as provided under paragraphs (G)(6) and (G)(7) of this rule, and, in order to apply, must submit the following:

(a) A complete CAIR permit application under paragraph (C) of rule 3745-109-16 of the Administrative Code.

(b) A certification, in a format specified by the director, that the unit meets the following:

(i) Is not a CAIR NOx ozone season unit under paragraph (C) of rule 3745-109-01 of the Administrative Code and is not covered by a retired unit exemption under paragraph (D) of rule 3745-109-01 of the Administrative Code that is in effect.

(ii) Is not covered by a retired unit exemption under 40 CFR 72.8 that is in effect.

(iii) Vents all of its emissions to a stack.

(iv) Has documented heat input for more than eight hundred seventy-six hours during the six months immediately preceding submission of the CAIR permit application under paragraph (C) of rule 3745-109-16 of the Administrative Code.

(c) A monitoring plan in accordance with rule 3745-109-20 of the Administrative Code.

(d) A complete certificate of representation under paragraph (D) of rule 3745-109-15 of the Administrative Code consistent with paragraph (C) of this rule, if no CAIR designated representative has been previously designated for the source that includes the unit.

(e) A statement, in a format specified by the director, whether the CAIR designated representative requests that the unit be allocated CAIR NOx ozone season allowances under paragraph (I)(2) or (I)(3) of this rule (subject to the conditions in paragraphs (E)(8) and (G)(7) of this rule). If allocation under paragraph (I)(3) of this rule is requested, this statement shall include a statement that the owners and operators of the unit intend to repower the unit before January 1, 2015 and that they will provide, upon request, documentation demonstrating such intent.

(2) Duty to reapply.

(a) The CAIR designated representative of a CAIR NOx ozone season opt-in unit shall submit a complete CAIR permit application under paragraph (C) of rule 3745-109-16 of the Administrative Code to renew the CAIR opt-in unit permit in accordance with the director's regulations for Title V operating permits, or the director's regulations for other federally enforceable permits if applicable, addressing permit renewal.

(b) Unless the director issues a notification of acceptance of withdrawal of the CAIR NOx ozone season opt-in unit from the CAIR NOx ozone season trading program in accordance with paragraph (G) of this rule or the unit becomes a CAIR NOx ozone season unit under paragraph (C) of rule 3745-109-01 of the Administrative Code, the CAIR NOx ozone season opt-in unit shall remain subject to the requirements for a CAIR NOx ozone season opt-in unit, even if the CAIR designated representative for the CAIR NOx ozone season opt-in unit fails to submit a CAIR permit application that is required for renewal of the CAIR opt-in permit under paragraph (D)(2)(a) of this rule.

(E) Opt-in process.

The director shall issue or deny a CAIR opt-in permit for a unit for which an initial application for a CAIR opt-in permit under paragraph (D) of this rule is submitted in accordance with the following:

(1) Interim review of monitoring plan. The director and the administrator shall determine, on an interim basis, the sufficiency of the monitoring plan accompanying the initial application for a CAIR opt-in permit under paragraph (D) of this rule. A monitoring plan is sufficient, for purposes of interim review, if the plan appears to contain information demonstrating that the NOx emissions rate and heat input of the unit and all other applicable parameters are monitored and reported in accordance with rule 3745-109-20 of the Administrative Code. A determination of sufficiency shall not be construed as acceptance or approval of the monitoring plan.

(2) Monitoring and reporting.

(a) Monitoring.

(i) If the director and the administrator determine that the monitoring plan is sufficient under paragraph (E)(1) of this rule, the owner or operator shall monitor and report the NOx emissions rate and the heat input of the unit and all other applicable parameters, in accordance with rule 3745-109-20 of the Administrative Code, starting on the date of certification of the appropriate monitoring systems under rule 3745-109-20 of the Administrative Code and continuing until a CAIR opt-in permit is denied under paragraph (E)(6) of this rule or, if a CAIR opt-in permit is issued, the date and time when the unit is withdrawn from the

CAIR NOx ozone season trading program in accordance with paragraph (G) of this rule.

(ii) The monitoring and reporting under paragraph (E)(2)(a)(i) of this rule shall include the entire control period immediately before the date on which the unit enters the CAIR NOx ozone season trading program under paragraph (E)(7) of this rule, during which period monitoring system availability must not be less than ninety per cent under rule 3745-109-20 of the Administrative Code and the unit must be in full compliance with any applicable state or federal emissions or emissions-related requirements.

(b) To the extent the NOx emissions rate and the heat input of the unit are monitored and reported in accordance with rule 3745-109-20 of the Administrative Code for one or more control periods, in addition to the control period under paragraph (E)(2)(a)(ii) of this rule, during which control periods monitoring system availability is not less than ninety per cent under rule 3745-109-20 of the Administrative Code and the unit is in full compliance with any applicable state or federal emissions or emissions-related requirements and which control periods begin not more than three years before the unit enters the CAIR NOx ozone season trading program under paragraph (E)(7) of this rule, such information shall be used as provided in paragraphs (E)(3) and (E)(4) of this rule.

(3) Baseline heat input. The unit's baseline heat rate shall equal either of the following:

(a) If the unit's NOx emissions rate and heat input are monitored and reported for only one control period, in accordance with paragraph (E)(2)(a) of this rule, the unit's total heat input (in mmBtu) for the control period.

(b) If the unit's NOx emissions rate and heat input are monitored and reported for more than one control period, in accordance with paragraphs (E)(2)(a) and (E)(2)(b) of this rule, the average of the amounts of the unit's total heat input (in mmBtu) for the control periods under paragraphs (E)(2)(a)(ii) and (E)(2)(b) of this rule.

(4) Baseline NOx emission rate. The unit's baseline NOx emission rate shall equal one of the following:

(a) If the unit's NOx emissions rate and heat input are monitored and reported for only one control period, in accordance with paragraph (E)(2)(a) of this rule of this section, the unit's NOx emissions rate (in pounds per mmBtu) for the control period.

(b) If the unit's NOx emissions rate and heat input are monitored and reported for more than one control period, in accordance with paragraphs (E)(2)(a) and (E)(2)(b) of this rule, and the unit does not have add-on NOx emission

controls during any such control periods, the average of the amounts of the unit's NOx emissions rate (in pounds per mmBtu) for the control periods under paragraphs (E)(2)(a)(ii) and (E)(2)(b) of this rule.

(c) If the unit's NOx emissions rate and heat input are monitored and reported for more than one control period, in accordance with paragraphs (E)(2)(a) and (E)(2)(b) of this rule, and the unit has add-on NOx emission controls during any such control periods, the average of the amounts of the unit's NOx emissions rate (in pounds per mmBtu) for such control periods during which the unit has add-on NOx emission controls.

(5) Issuance of CAIR opt-in permit. After calculating the baseline heat input and the baseline NOx emissions rate for the unit under paragraphs (E)(3) and (E)(4) of this rule and if the director determines that the CAIR designated representative shows that the unit meets the requirements for a CAIR NOx ozone season opt-in unit in paragraph (A) of this rule and meets the elements certified in paragraph (D)(1)(b) of this rule, the director shall issue a CAIR opt-in permit. The director shall provide a copy of the CAIR opt-in permit to the administrator, who shall then establish a compliance account for the source that includes the CAIR NOx ozone season opt-in unit unless the source already has a compliance account.

(6) Issuance of denial of CAIR opt-in permit. Notwithstanding paragraphs (E)(1) to (E)(5) of this rule, if at any time before issuance of a CAIR opt-in permit for the unit, the director determines that the CAIR designated representative fails to show that the unit meets the requirements for a CAIR NOx ozone season opt-in unit in paragraph (A) of this rule or meets the elements certified in paragraph (D)(1)(b) of this rule, the director shall issue a denial of a CAIR opt-in permit for the unit.

(7) Date of entry into CAIR NOx ozone season trading program. A unit for which an initial CAIR opt-in permit is issued by the director shall become a CAIR NOx ozone season opt-in unit, and a CAIR NOx ozone season unit, as of the later of May 1, 2009 or May first of the first control period during which such CAIR opt-in permit is issued.

(8) Repowered CAIR NOx ozone season opt-in unit.

(a) If a CAIR designated representative requests, and the director issues a CAIR opt-in permit providing for, allocation to a CAIR NOx ozone season opt-in unit of CAIR NOx ozone season allowances under paragraph (I)(3) of this rule and such unit is repowered after its date of entry into the CAIR NOx ozone season trading program under paragraph (E)(7) of this rule, the repowered unit shall be treated as a CAIR NOx ozone season opt-in unit replacing the original CAIR NOx ozone season opt-in unit, as of the date of start-up of the repowered unit's combustion chamber.

(b) Notwithstanding paragraphs (E)(3) and (E)(4) of this rule, as of the date of start-up under paragraph (E)(8)(a) of this rule, the repowered unit shall be

deemed to have the same date of commencement of operation, date of commencement of commercial operation, baseline heat input, and baseline NOx emission rate as the original CAIR NOx ozone season opt-in unit, and the original CAIR NOx ozone season opt-in unit shall no longer be treated as a CAIR NOx ozone season opt-in unit or a CAIR NOx ozone season unit.

(F) CAIR opt-in permit contents.

(1) Each CAIR opt-in permit shall contain the following:

(a) All elements required for a complete CAIR permit application under paragraph (C) of rule 3745-109-16 of the Administrative Code.

(b) The certification in paragraph (D)(1)(b) of this rule.

(c) The unit's baseline heat input under paragraph (E)(3) of this rule.

(d) The unit's baseline NOx emission rate under paragraph (E)(4) of this rule.

(e) A statement whether the unit is to be allocated CAIR NOx allowances under paragraph (I)(2) or (I)(3) of this rule (subject to the conditions in paragraphs (E)(8) and (G)(7) of this rule.

(f) A statement that the unit may withdraw from the CAIR NOx ozone season trading program only in accordance with paragraph (G) of this rule.

(g) A statement that the unit is subject to, and the owners and operators of the unit must comply with, the requirements of paragraph (H) of this rule.

(2) Each CAIR opt-in permit is deemed to incorporate automatically the definitions of terms under paragraph (B) of rule 3745-109-01 of the Administrative Code and, upon recordation by the administrator under rules 3745-109-18 and 3745-109-19 of the Administrative Code or this rule, every allocation, transfer, or deduction of CAIR NOx ozone season allowances to or from the compliance account of the source that includes a CAIR NOx ozone season opt-in unit covered by the CAIR opt-in permit.

(3) The CAIR opt-in permit shall be included, in a format specified by the permitting authority, in the CAIR permit for the source where the CAIR NOx ozone season opt-in unit is located and in a Title V operating permit or other federally enforceable permit for the source.

(G) Withdrawal from CAIR NOx ozone season trading program.

Except as provided under paragraph (G)(7) of this rule, a CAIR NOx ozone season opt-in unit may withdraw from the CAIR NOx ozone season trading program, but only if the director issues a notification to the CAIR designated representative of the CAIR NOx ozone season opt-in unit of the acceptance of the withdrawal of the

CAIR NOx ozone season opt-in unit in accordance with paragraph (G)(4) of this rule.

(1) Requesting withdrawal. In order to withdraw a CAIR NOx ozone season opt-in unit from the CAIR NOx ozone season trading program, the CAIR designated representative of the CAIR NOx ozone season opt-in unit shall submit to the director a request to withdraw effective as of midnight of September thirtieth of a specified calendar year, which date must be at least four years after September thirtieth of the year of entry into the CAIR NOx ozone season trading program under paragraph (E)(7) of rule 3745-109-21 of the Administrative Code. The request must be submitted no later than ninety days before the requested effective date of withdrawal.

(2) Conditions for withdrawal. Before a CAIR NOx ozone season opt-in unit covered by a request under paragraph (G)(1) of this rule may withdraw from the CAIR NOx ozone season trading program and the CAIR opt-in permit may be terminated under paragraph (G)(5) of this rule, the following conditions must be met:

(a) For the control period ending on the date on which the withdrawal is to be effective, the source that includes the CAIR NOx ozone season opt-in unit must meet the requirement to hold CAIR NOx ozone season allowances under paragraph (E)(3) of rule 3745-109-01 of the Administrative Code and cannot have any excess emissions.

(b) After the requirement for withdrawal under paragraph (G)(2)(a) of this rule is met, the administrator shall deduct from the compliance account of the source that includes the CAIR NOx ozone season opt-in unit CAIR NOx ozone season allowances equal in amount to and allocated for the same or a prior control period as any CAIR NOx ozone season allowances allocated to the CAIR NOx ozone season opt-in unit under paragraph (I) of this rule for any control period for which the withdrawal is to be effective. If there are no remaining CAIR NOx ozone season units at the source, the administrator shall close the compliance account, and the owners and operators of the CAIR NOx ozone season opt-in unit may submit a CAIR NOx ozone season allowance transfer for any remaining CAIR NOx ozone season allowances to another CAIR NOx ozone season allowance tracking system in accordance with rule 3745-109-19 of the Administrative Code.

(3) Notification.

(a) After the requirements for withdrawal under paragraphs (G)(1) and (G)(2) of this rule are met (including deduction of the full amount of CAIR NOx ozone season allowances required), the director shall issue a notification to the CAIR designated representative of the CAIR NOx ozone season opt-in unit of the acceptance of the withdrawal of the CAIR NOx ozone season opt-in unit as of midnight on September thirtieth of the calendar year for which the withdrawal was requested.

(b) If the requirements for withdrawal under paragraphs (G)(1) and (G)(2) of this rule are not met, the director shall issue a notification to the CAIR designated representative of the CAIR NOx ozone season opt-in unit that the CAIR NOx ozone season opt-in unit's request to withdraw is denied. Such CAIR NOx opt-in unit shall continue to be a CAIR NOx ozone season opt-in unit.

(4) Permit amendment. After the director issues a notification under paragraph (G)(3)(a) of this rule that the requirements for withdrawal have been met, the director shall revise the CAIR permit covering the CAIR NOx ozone season opt-in unit to terminate the CAIR opt-in permit for such unit as of the effective date specified under paragraph (G)(3)(a) of this rule. The unit shall continue to be a CAIR NOx ozone season opt-in unit until the effective date of the termination and shall comply with all requirements under the CAIR NOx ozone season trading program concerning any control periods for which the unit is a CAIR NOx ozone season opt-in unit, even if such requirements arise or must be complied with after the withdrawal takes effect.

(5) Reapplication upon failure to meet conditions of withdrawal. If the director denies the CAIR NOx ozone season opt-in unit's request to withdraw, the CAIR designated representative may submit another request to withdraw in accordance with paragraphs (G)(1) and (G)(2) of rule 3745-109-21 of the Administrative Code.

(6) Ability to reapply to the CAIR NOx ozone season trading program. Once a CAIR NOx ozone season opt-in unit withdraws from the CAIR NOx ozone season trading program and its CAIR opt-in permit is terminated under this section, the CAIR designated representative may not submit another application for a CAIR opt-in permit under paragraph (D) of this rule for such CAIR NOx ozone season opt-in unit before the date that is four years after the date on which the withdrawal became effective. Such new application for a CAIR opt-in permit shall be treated as an initial application for a CAIR opt-in permit under paragraph (E) of this rule.

(7) Inability to withdraw. Notwithstanding paragraphs (G)(1) to (G)(6) of this rule, a CAIR NOx ozone season opt-in unit shall not be eligible to withdraw from the CAIR NOx ozone season trading program if the CAIR designated representative of the CAIR NOx opt-in unit requests, and the director issues a CAIR opt-in permit providing for, allocation to the CAIR NOx ozone season opt-in unit of CAIR NOx ozone season allowances under paragraph (I)(3) of this rule.

(H) Change in regulatory status.

(1) Notification. If a CAIR NOx ozone season opt-in unit becomes a CAIR NOx ozone season unit under paragraph (C) of rule 3745-109-01 of the Administrative Code, then the CAIR designated representative shall notify in

writing the director and the administrator of such change in the CAIR NOx ozone season opt-in unit's regulatory status, within thirty days of such change.

(2) Director's and administrator's actions.

(a) If a CAIR NOx ozone season opt-in unit becomes a CAIR NOx ozone season unit under paragraph (C) of rule 3745-109-01 of the Administrative Code, the director shall revise the CAIR NOx ozone season opt-in unit's CAIR opt-in permit to meet the requirements of a CAIR permit under paragraph (D) of rule 3745-109-16 of the Administrative Code, and remove the CAIR opt-in permit provisions, as of the date on which the CAIR NOx ozone season opt-in unit becomes a CAIR NOx ozone season unit under paragraph (C) of rule 3745-109-01 of the Administrative Code.

(b) Allowance deductions.

(i) The administrator shall deduct from the compliance account of the source that includes the CAIR NOx ozone season opt-in unit that becomes a CAIR NOx ozone season unit under paragraph (C) of rule 3745-109-01 of the Administrative Code, CAIR NOx ozone season allowances equal in amount to and allocated for the same or a prior control period as follows:

(a) Any CAIR NOx ozone season allowances allocated to the CAIR NOx ozone season opt-in unit under paragraph (I) of this rule for any control period after the date on which the CAIR NOx ozone season opt-in unit becomes a CAIR NOx ozone season unit under paragraph (C) of rule 3745-109-01 of the Administrative Code.

(b) If the date on which the CAIR NOx ozone season opt-in unit becomes a CAIR NOx ozone season unit under paragraph (C) of rule 3745-109-01 of the Administrative Code is not September thirtieth, the CAIR NOx ozone season allowances allocated to the CAIR NOx ozone season opt-in unit under paragraph (I) of this rule for the control period that includes the date on which the CAIR NOx ozone season opt-in unit becomes a CAIR NOx ozone season unit under paragraph (C) of rule 3745-109-01 of the Administrative Code, multiplied by the ratio of the number of days, in the control period, starting with the date on which the CAIR NOx ozone season opt-in unit becomes a CAIR NOx ozone season unit under paragraph (C) of rule 3745-109-01 of the Administrative Code divided by the total number of days in the control period and rounded to the nearest whole allowance as appropriate.

(ii) The CAIR designated representative shall ensure that the compliance account of the source that includes the CAIR NOx ozone season unit that becomes a CAIR NOx ozone season unit under paragraph (C) of

rule 3745-109-01 of the Administrative Code contains the CAIR NOx ozone season allowances necessary for completion of the deduction under paragraph (H)(2)(b)(i) of this rule.

(c) Allowance allocations.

(i) For every control period after the date on which the CAIR NOx ozone season opt-in unit becomes a CAIR NOx ozone season unit under paragraph (C) of rule 3745-109-01 of the Administrative Code, the CAIR NOx ozone season opt-in unit shall be allocated CAIR NOx ozone season allocations under paragraph (C) of rule 3745-109-17 of the Administrative Code.

(ii) If the date on which the CAIR NOx ozone season opt-in unit becomes a CAIR NOx ozone season unit under paragraph (C) of rule 3745-109-01 of the Administrative Code is not September thirtieth, the following amount of CAIR NOx ozone season allowances shall be allocated to the CAIR NOx ozone season opt-in unit (as a CAIR NOx ozone season unit) under paragraph (C) of rule 3745-109-17 of the Administrative Code for the control period that includes the date on which the CAIR NOx ozone season opt-in unit becomes a CAIR NOx ozone season unit under paragraph (C) of rule 3745-109-01 of the Administrative Code:

The amount of CAIR NOx ozone season allowances otherwise allocated to the CAIR NOx ozone season opt-in unit (as a CAIR NOx ozone season unit) under paragraph (C) of rule 3745-109-17 of the Administrative Code for the control period multiplied by the ratio of the number of days, in the control period, starting with the date on which the CAIR NOx ozone season opt-in unit becomes a CAIR NOx ozone season unit under paragraph (C) of rule 3745-109-01 of the Administrative Code, divided by the total number of days in the control period, rounded to the nearest whole allowance, as appropriate.

(I) CAIR NOx ozone season allowance allocations to CAIR NOx ozone season opt-in units.

(1) Timing requirements.

(a) When the CAIR opt-in permit is issued under paragraph (E)(5) of this rule, the director shall allocate CAIR NOx ozone season allowances to the CAIR NOx ozone season opt-in unit, and submit to the administrator the allocation for the control period in which a CAIR NOx ozone season opt-in unit enters the CAIR NOx ozone season trading program under paragraph (E)(7) of this rule, in accordance with paragraph (I)(2) or (I)(3) of this rule.

(b) By no later than July thirty-first, of the control period after the control period in which a CAIR NOx ozone season opt-in unit enters the CAIR NOx ozone season trading program under paragraph (E)(7) of this rule, and July thirty-

first of each year thereafter, the director shall allocate CAIR NOx ozone season allowances to the CAIR NOx ozone season opt-in unit, and submit to the administrator the allocation for the control period that includes such submission deadline and in which the unit is a CAIR NOx ozone season opt-in unit, in accordance with paragraph (I)(2) or (I)(3) of this rule.

(2) Calculation of allocation. For each control period for which a CAIR NOx ozone season opt-in unit is to be allocated CAIR NOx ozone season allowances, the director shall allocate allowances in accordance with the following procedures:

(a) The heat input (in mmBtu) used for calculating the CAIR NOx ozone season allowance allocation shall be the lesser of the following:

(i) The CAIR NOx ozone season opt-in unit's baseline heat input determined under paragraph (E)(3) of this rule.

(ii) The CAIR NOx ozone season opt-in unit's heat input, as determined in accordance with rule 3745-109-20 of the Administrative Code, for the immediately prior control period, except when the allocation is being calculated for the control period in which the CAIR NOx ozone season opt-in unit enters the CAIR NOx ozone season trading program under paragraph (E)(7) of this rule.

(b) The NOx emission rate (in pounds per mmBtu) used for calculating CAIR NOx ozone season allowance allocations shall be the lesser of the following:

(i) The CAIR NOx ozone season opt-in unit's baseline NOx emissions rate (in pounds per mmBtu) determined under paragraph (E)(4) of this rule and multiplied by seventy per cent.

(ii) The most stringent state or federal NOx emissions limitation applicable to the CAIR NOx ozone season opt-in unit at any time during the control period for which CAIR NOx ozone season allowances are to be allocated.

(c) The director shall allocate CAIR NOx ozone season allowances to the CAIR NOx ozone season opt-in unit in an amount equaling the heat input under paragraph (I)(2)(a) of this rule, multiplied by the NOx emission rate under paragraph (I)(2)(b) of this rule, divided by two thousand pounds per ton, and rounded to the nearest whole allowance as appropriate.

(3) Notwithstanding paragraph (I)(2) of this rule and if the CAIR designated representative requests, and the director issues a CAIR opt-in permit (based on a demonstration of the intent to repower stated under paragraph (D)(1)(e) of this rule) providing for, allocation to a CAIR NOx ozone season opt-in unit of CAIR NOx ozone season allowances under this paragraph (subject to the conditions in

paragraphs (E)(8) and (G)(7) of this rule), the director shall allocate to the CAIR NOx ozone season opt-in unit as follows:

(a) For each control period in 2009 to 2014 for which the CAIR NOx ozone season opt-in unit is to be allocated the following CAIR NOx ozone season allowances:

(i) The heat input (in mmBtu) used for calculating CAIR NOx ozone season allowance allocations shall be determined as described in paragraph (I)(2)(a) of this rule.

(ii) The NOx emission rate (in pounds per mmBtu) used for calculating CAIR NOx ozone season allowance allocations shall be the lesser of the following:

(a) The CAIR NOx ozone season opt-in unit's baseline NOx emissions rate (in pounds per mmBtu) determined under paragraph (E)(4) of this rule.

(b) The most stringent state or federal NOx emissions limitation applicable to the CAIR NOx ozone season opt-in unit at any time during the control period in which the CAIR NOx ozone season opt-in unit enters the CAIR NOx ozone season trading program under paragraph (E)(7) of this rule.

(iii) The director shall allocate CAIR NOx ozone season allowances to the CAIR NOx ozone season opt-in unit in an amount equaling the heat input under paragraph (I)(3)(a)(i) of this rule, multiplied by the NOx emission rate under paragraph (I)(3)(a)(ii) of this rule, divided by two thousand pounds per ton, and rounded to the nearest whole allowance as appropriate.

(b) For each control period in 2015 and thereafter for which the CAIR NOx ozone season opt-in unit is to be allocated the following CAIR NOx ozone season allowances:

(i) The heat input (in mmBtu) used for calculating the CAIR NOx ozone season allowance allocations shall be determined as described in paragraph (I)(2)(a) of this rule.

(ii) The NOx emission rate (in pounds per mmBtu) used for calculating the CAIR NOx ozone season allowance allocation shall be the lesser of the following:

(a) 0.15 pound per mmBtu.

(b) The CAIR NOx ozone season opt-in unit's baseline NOx emissions rate (in pounds per mmBtu) determined under paragraph (E)(4) of this rule.

(c) The most stringent state or federal NOx emissions limitation applicable to the CAIR NOx ozone season opt-in unit at any time during the control period for which CAIR NOx ozone season allowances are to be allocated.

(iii) The director shall allocate CAIR NOx ozone season allowances to the CAIR NOx ozone season opt-in unit in an amount equaling the heat input under paragraph (I)(3)(a)(i) of this rule, multiplied by the NOx emission rate under paragraph (I)(3)(a)(ii) of this rule, divided by two thousand pounds per ton, and rounded to the nearest whole allowance as appropriate.

(4) Recordation.

(a) The administrator shall record, in the compliance account of the source that includes the CAIR NOx ozone season opt-in unit, the CAIR NOx ozone season allowances allocated by the director to the CAIR NOx ozone season opt-in unit under paragraph (I)(1)(a) of this rule.

(b) By September first, after the control period in which a CAIR ozone season opt-in unit enters the CAIR NOx ozone season trading program under paragraph (E)(7) of this rule, and September first of each year thereafter, the administrator shall record, in the compliance account of the source that includes the CAIR NOx ozone season opt-in unit, the CAIR NOx ozone season allowances allocated by the director to the CAIR NOx ozone season opt-in unit under paragraph (I)(1)(b) of this rule.

Effective: 11/14/2013

R.C. 119.032 review dates: 08/29/2013 and 11/14/2018

CERTIFIED ELECTRONICALLY
Certification

11/04/2013
Date

Promulgated Under: 119.03
Statutory Authority: 3704.03(E)
Rule Amplifies: 3704.03(A), 3704.03(E), 3704.03(V)
Prior Effective Dates: 09/27/07, 07/16/09

Chapter 3745-110: Nitrogen Oxides - Reasonable Available Control Technologies

Contact: Alan Harness 614-644-4838
Alan.Harness@epa.ohio.gov

3745-110-01 **Definitions.**

[Comment: For dates of non-regulatory government publications, publications of recognized organizations and associations, federal rules, and federal statutory provisions referenced in this rule, see paragraph (C) of this rule titled "Reference to materials."]

(A) Except as otherwise provided in this rule, the definitions in rule 3745-15-01 of the Administrative Code shall apply to this chapter.

(B) As used in this chapter:

(1) "Affected facility" means any facility that meets the applicability requirements in rule 3745-110-02 of the Administrative Code.

(2) "Affected source" means any source which is located at any affected facility and is not exempt under paragraph (K) of rule 3745-110-03 of the Administrative Code.

(3) "Auxiliary boiler" means either a boiler that produces steam and operates at a capacity factor of less than ten per cent or a boiler at a nuclear electrical generating facility that produces steam for the facility during either emergency periods or atypical extended periods of nuclear plant outage.

(4) "Black start unit" means any electric generating unit operated only in the event of a complete loss of facility power to test reliability, or for maintenance.

(5) "British thermal unit" or "Btu" means the amount of heat required to raise one pound of water one degree Fahrenheit.

(6) "Capacity factor" means either the ratio of gross actual output to the gross rated output or the ratio of actual heat input to potential heat input for the calendar year, expressed as a percentage.

(7) "Cell burner" means burner cells that consist of two or three circular burners combined into a vertically oriented assembly that creates a compact, intense flame.

(8) "Coal" means all solid fuels classified as anthracite, bituminous, sub-bituminous or lignite, as defined by ASTM D388-12, "Standard Classification for Coals by Rank."

(9) "Cyclone-fired boiler" means a boiler that combusts fuel in a horizontal water-cooled cylinder before releasing the combustion gases into the boiler.

(10) "Diesel fuel" means a low sulfur fuel oil of grades 1-D or 2-D, as defined by ASTM D975-12, "Standard Specification for Diesel Fuel Oils."

(11) "Distillate oil" means fuel oil that complies with the specifications for fuel oil number one or two, as defined by ASTM D396-12, "Standard Specification for Fuel Oils."

(12) "Dry bottom" means a boiler design in which the coal-fired unit is equipped with an ash disposal hopper bottom with sufficient cooling surface so that the ash particles impinging on the furnace walls or hopper bottom can be removed in a dry state.

(13) "Dual fuel" means a mixture of diesel fuel or distillate oil and gaseous fuels.

(14) "Engine testing operation" means the activities, or the apparatus used in conducting testing of an internal combustion engine for the purpose of quality assurance/quality control in the manufacturing process of the engine, or for evaluating the pollutant emissions emitted by the engine.

(15) "Gaseous fuels" means natural gas, blast furnace gas, coke oven gas or refinery fuel gas.

(16) "Industrial boiler" means a steam generating unit that generates steam to supply power and/or heat to an industrial, institutional, or commercial operation. This term does not include boilers that serve electrical generating units and cogeneration facilities.

(17) "Internal combustion engine" means any engine in which power, produced by heat and/or pressure developed in the engine cylinder(s) by burning a mixture of air and fuel (including diesel fuel), is subsequently converted to mechanical work by means of one or more pistons.

(18) "Lb per mmBtu" or "lb/mmBtu" means pound per million British thermal units.

(19) "Large boiler" means an industrial boiler with a maximum heat input capacity greater than one hundred mmBtu/hr and equal to or less than two hundred fifty mmBtu/hr.

(20) "Lean burn engine" means an internal combustion engine where the amount of oxygen in the exhaust gases is one per cent or more, by weight.

(21) "Low NOx burner" means a burner designed to reduce flame turbulence by the mixing of fuel and air and by establishing fuel-rich zones for initial combustion, thereby reducing the formation of NOx.

(22) "Mid-size boiler" means an industrial boiler with a maximum heat input capacity greater than fifty mmBtu/hr and equal to or less than one hundred mmBtu/hr.

(23) "MmBtu/hr" means million British thermal units per hour.

(24) "Municipal solid waste" means household, commercial/retail, and/or institutional waste. Household waste includes material discarded by single and multiple residential dwellings, hotels, motels, and other similar permanent or temporary housing establishments or facilities. Commercial/retail waste includes material discarded by stores, offices, restaurants, warehouses, non-manufacturing activities at industrial facilities, and similar establishments or facilities. Institutional waste includes material discarded by schools, hospitals, non-manufacturing facilities and other similar establishments or facilities. Household, commercial/retail, and institutional wastes do not include sewage, wood pallets, construction and demolition wastes, or motor vehicles (including motor vehicle parts or vehicle fluff). Municipal solid waste does include motor vehicle maintenance materials, limited to vehicle batteries, used motor oil, and tires. Municipal solid waste does not include wastes that are solely segregated medical wastes. However any mixture of segregated wastes which contain more than thirty per cent medical waste discards is considered to be municipal solid waste.

(25) "Municipal waste combustor" means any device that combusts any solid, liquid, or gasified municipal solid waste.

(26) "N/A" means not applicable.

(27) "Natural gas" means a naturally occurring mixture of hydrocarbon and non-hydrocarbon gases found in geologic formations beneath the earth's surface, of which the principal constituent is methane.

(28) "Nitrogen oxides" or "NOx" means all oxides of nitrogen which are determined to be ozone precursors, including, but not limited to, nitrogen oxide and nitrogen dioxide, but excluding nitrous oxide, collectively expressed as nitrogen dioxide.

(29) "Oil" means crude oil or petroleum, or a liquid fuel derived from crude oil or petroleum, including distillate oil and residual oil.

(30) "Overfeed stoker-fired" means a boiler design that employs a moving grate assembly where the coal is fed into a hopper and then onto a continuous grate that conveys the coal into the furnace. As coal moves through the furnace, it passes over several air zones for staged burning.

(31) "Peaking unit" means any electric generating unit that operates at a capacity factor of less than ten per cent between April first and October thirty-first of any calendar year.

(32) "Potential to emit" means the maximum capacity of a facility or stationary source to emit NOx under its physical and operational design. Any physical or operational limitation on the capacity of the facility or stationary source to emit NOx, including air pollution control equipment and restrictions on hours of operation or on the type or amount of material combusted, stored or processed,

shall be treated as part of its design if the limitation or the effect it would have on emissions is federally enforceable or legally and practicably enforceable by the state.

(33) "Ppmvd" means parts per million by volume on a dry basis.

(34) "RACT" means the lowest emissions limitation that a particular source is capable of meeting by the application of control technology that is reasonably available considering technological and economic feasibility.

(35) "Reheat furnace" means a furnace in which metal ingots, billets, slabs, beams, blooms and other similar products are heated to bring them to the temperature required for hot-working.

(36) "Research and development sources" means a research or laboratory facility the primary purpose of which is to conduct research and development into new processes and products, that is operated under the close supervision of technically trained personnel, and that is not engaged in the manufacture of products for sale or exchange for commercial profit, except in a de-minimis manner.

(37) "Residual oil" means crude oil, fuel oil that does not comply with the specifications under the definition of "distillate oil," and all fuel oil numbers four, five, or six, as defined by ASTM D396-12, "Standard Specification for Fuel Oils."

(38) "Rich burn engine" means an internal combustion engine where the amount of oxygen in the engine exhaust gases is less than one per cent, by weight.

(39) "Small boiler" means an industrial boiler with a maximum heat input capacity greater than twenty mmBtu/hr and equal to or less than fifty mmBtu/hr.

(40) "Space heating unit " means any fuel burning equipment that is used only for space heating purposes during the period from November first through March thirty-first or during other periods of cold weather conditions.

(41) "Spreader stoker-fired" means a boiler design where mechanical or pneumatic feeders distribute coal uniformly over the surface of a moving grate.

(42) "Stand-by fuel burning equipment" means any fuel burning equipment which is used only as a direct substitution for other fuel burning equipment for a limited period due to unpredictable breakdown or failure, or routine scheduled maintenance of such other fuel burning equipment or its associated air pollution control system.

(43) "Start-up unit" means a unit operated only to start up larger electric generating units.

(44) "Stationary combustion turbine" means any simple cycle combustion turbine, regenerative cycle combustion turbine, or any combustion turbine portion of a combined cycle steam/electric generating system that is not self-propelled, but which may be mounted on a vehicle for portability.

(45) "Stationary internal combustion engine" means any reciprocating internal combustion engine that is not self propelled, but which may be mounted on a vehicle for portability.

(46) "Tangential-fired" means a furnace firing design where the burners are mounted at the corners of the furnace chamber.

(47) "Tune-up" means adjustments made to a burner or boiler in accordance with procedures supplied by the manufacturer (or approved specialist) to optimize the combustion efficiency.

(48) "Very large boiler" means an industrial boiler with a maximum heat input capacity greater than two hundred fifty mmBtu/hr.

(49) "Wall-fired" means a furnace firing design in which the burners are mounted in an array on one or more vertical walls, including:

(a) Opposed firing, where the burners are mounted on two opposite walls; and

(b) Single-wall firing, where the burners are mounted on only one wall.

[Comment: Wall-fired does not include cell burner configurations.]

(50) "Wet bottom" means a furnace design in which the coal-fired unit is equipped for slag disposal with a two-stage arrangement consisting of a chamber in the lower part of the furnace where the slag is deposited in a liquid state onto a collection surface, and a tank, containing water, into which the liquid slag is tapped.

(C) Reference to materials. This chapter includes references to certain matter or materials. The text of the referenced materials is not included in the regulations contained in this chapter. Information on the availability of the referenced materials as well as the date of, and/or the particular edition or version of the material is included in this rule. For materials subject to change, only the specific versions specified in this rule are referenced. Material is referenced as it exists on the effective date of this rule. Except for subsequent annual publication of existing (unmodified) Code of Federal Regulation compilations, any amendment or revision to a referenced document is not applicable unless and until this rule has been amended to specify the new dates.

(1) Availability. The materials incorporated by reference are available as follows:

(a) American Society for Testing Materials (ASTM). Information and copies of documents may be obtained by writing to: "ASTM International, 100 Bar Harbor Drive, P.O. Box C700, West Conshohocken, Pennsylvania 19426-2959." These documents are also available for purchase at www.astm.org. ASTM documents are also available for inspection and copying at most public libraries and "The State Library of Ohio."

(b) Code of Federal Regulations (CFR). Information and copies may be obtained by writing to: "Superintendent of Documents, Attn: New Orders, PO Box 371954, Pittsburgh, PA 15250-7954." The full text of the CFR is also available in electronic format at http://www.ecfr.gov. The CFR compilations are also available for inspection and copying at most public libraries and "The State Library of Ohio."

(c) Federal Register (FR). Information and copies may be obtained by writing to: "Superintendent of Documents, Attn: New Orders, PO Box 371954, Pittsburgh, PA 15250-7954." Online access to the Federal Register is available at http://www.gpo.gov/fdsys/. A copy of the Federal Register is also available for inspection and copying at most public libraries and "The State Library of Ohio."

(d) "EPA Air Pollution Control Cost Manual;" United States Environmental Protection Agency. Information and copies of this document may be obtained by writing to: "United States Environmental Protection Agency, Office of Air Quality Planning and Standards, Research Triangle Park, North Carolina 27711." This document is also available for viewing at http://www.epa.gov/ttn/ecas/costmodels.html.

(e) "Guidance for Estimating Capital and Annual Costs of Air Pollution Systems;" Ohio environmental protection agency Engineering Guide 46. Information and copies of this document may be obtained by writing to: "Ohio environmental protection agency, division of air pollution control, 50 West Town Street, Suite 700, Columbus, Ohio, 43215." This document is also available for viewing at http://www.epa.ohio.gov/dapc/engineer/eguides.aspx

(2) Incorporated materials.

(a) 40 CFR Part 60; "Standards of Performance for New Stationary Sources;" as published in the July 1, 2012 Code of Federal Regulations.

(b) 40 CFR Part 60, Appendix F; "Quality Assurance Procedures;" 52 FR 21008, June 4, 1987; 52 FR 27612, July 22, 1987, as amended at 56 FR 5527, Feb. 11, 1991; 69 FR 1816, Jan. 12, 2004.

(c) 40 CFR Part 75; "Continuous emission monitoring;" as published in the July 1, 2012 Code of Federal Regulations.

(d) ASTM D388-12; "Standard Classification of Coals by Rank;" updated 2005.

(e) ASTM D396-12; "Standard specification for fuel oils;" updated 2005.

(f) ASTM D975-12; "Standard Specification for Diesel Fuel Oils;" updated 2005.

(g) "Clean Air Interstate Rule;" as published May 12, 2005 in volume 70 of the Federal Register, page 25162.

(h) "EPA Air Pollution Control Cost Manual;" EPA/452/B-02-001, Sixth Edition, January 2002.

(i) "Guidance for Estimating Capital and Annual Costs of Air Pollution Systems;" Ohio environmental protection agency Engineering Guide 46; March 1983.

(j) Performance Specification 2; contained in 40 CFR Part 60, Appendix B; "Specifications and Test Procedures for SO2 and NOX Continuous Emission Monitoring Systems in Stationary Sources;" 48 FR 13327, Mar. 30, 1983 and 48 FR 23611, May 25, 1983, as amended at 48 FR 32986, July 20, 1983; 51 FR 31701, Aug. 5, 1985; 52 FR 17556, May 11, 1987; 52 FR 30675, Aug. 18, 1987; 52 FR 34650, Sept. 14, 1987; 53 FR 7515, Mar. 9, 1988; 53 FR 41335, Oct. 21, 1988; 55 FR 18876, May 7, 1990; 55 FR 40178, Oct. 2, 1990; 55 FR 47474, Nov. 14, 1990; 56 FR 5526, Feb. 11, 1991; 59 FR 64593, Dec. 15, 1994; 64 FR 53032, Sept. 30, 1999; 65 FR 62130, 62144, Oct. 17, 2000; 65 FR 48920, Aug. 10, 2000; 69 FR 1802, Jan. 12, 2004; 70 FR 28673, May 18, 2005.

(k) USEPA method 7; contained in 40 CFR Part 60, Appendix A; "Determination of nitrogen oxide emissions from stationary sources;" as published in the July 1, 2012 Code of Federal Regulations.

(l) USEPA method 7a; contained in 40 CFR Part 60, Appendix A; "Determination of nitrogen oxide emissions from stationary sources-Ion chromatographic method;" as published in the July 1, 2012 Code of Federal Regulations.

(m) USEPA method 7c; contained in 40 CFR Part 60, Appendix A; "Determination of nitrogen oxide emissions from stationary sources-Alkaline-permanganate/colorimetric method;" as published in the July 1, 2012 Code of Federal Regulations.

(n) USEPA method 7d; contained in 40 CFR Part 60, Appendix A; "Determination of nitrogen oxide emissions from stationary sources-Alkaline-permanganate/ion chromatographic method;" as published in the July 1, 2012 Code of Federal Regulations.

(o) USEPA method 7e; contained in 40 CFR Part 60, Appendix A; "Determination of Nitrogen Oxides Emissions From Stationary Sources (Instrumental Analyzer Procedure);" as published in the July 1, 2012 Code of Federal Regulations.

Effective: 07/18/2013

R.C. 119.032 review dates: 05/02/2013 and 07/18/2018

CERTIFIED ELECTRONICALLY
Certification

07/08/2013
Date

Promulgated Under: 119.03
Statutory Authority: 3704.03(E)
Rule Amplifies: 3704.03(A), 3704.03(E)
Prior Effective Dates: December 22, 2007

3745-110-02 **Applicability.**

[Comment: For dates of non-regulatory government publications, publications of recognized organizations and associations, federal rules, and federal statutory provisions referenced in this rule, see paragraph (C) of rule 3745-110-01 of the Administrative Code titled "Reference to materials."]

(A) Unless exempted under paragraph (K) of rule 3745-110-03 of the Administrative Code, the requirements of this chapter shall apply to any stationary source of NOx emissions that meets one of the following conditions:

(1) Existing sources.

(a) The source is, as defined in rule 3745-110-01 of the Administrative Code, a very large boiler, large boiler, mid-size boiler, small boiler, stationary combustion turbine, stationary internal combustion engine, or reheat furnace, or it is located at a facility that emits or has the potential to emit a total of more than one hundred tons per year of NOx emissions from all sources at that facility, including all sources that are exempt under rule 3745-110-03 of the Administrative Code; and

(b) The source is located in Ashtabula, Cuyahoga, Geauga, Lake, Lorain, Medina, Portage, or Summit County.

(2) New or modified sources, as defined in rule 3745-31-01 of the Administrative Code.

(a) The source is, as defined in rule 3745-110-01 of the Administrative Code, a very large boiler, large boiler, mid-size boiler, small boiler, stationary combustion turbine, stationary internal combustion engine, or reheat furnace; and

(b) Except where the emission limitations and requirements of an applicable new source performance standard under 40 CFR Part 60 are more stringent than the emission limitations and requirements of this chapter, any new or modified source issued a permit-to-install after January 1, 2008, shall comply with the requirements of this chapter.

[Comment: If a new source performance standard is determined to be more stringent than the requirements of this chapter, the new source described under this paragraph shall comply with the new source performance standards in lieu of the requirements of this chapter].

Effective: 07/18/2013

R.C. 119.032 review dates: 05/02/2013 and 07/18/2018

CERTIFIED ELECTRONICALLY
Certification

07/08/2013
Date

Promulgated Under: 119.03
Statutory Authority: 3704.03(E)
Rule Amplifies: 3704.03(A), 3704.03(E)
Prior Effective Dates: 12/22/07

3745-110-03 **RACT requirements and/or limitations for emissions of NOx from stationary sources.**

[Comment: For dates of non-regulatory government publications, publications of recognized organizations and associations, federal rules, and federal statutory provisions referenced in this rule, see paragraph (C) of rule 3745-110-01 of the Administrative Code titled "Reference to materials."]

(A) Small boilers.

The owner or operator of a small boiler must annually perform a tune-up and maintain, in a permanently bound log book, or other format approved in writing by the director the following information:

(1) The date of the last tune-up;

(2) The name, title and affiliation of the person who performed the tune-up and made any adjustments; and

(3) Any other information which the Ohio environmental protection agency may require as a condition of approval of any permit for the boiler.

(B) Mid-size boilers.

Except as otherwise provided in paragraphs (J) to (L) of this rule, on and after the compliance deadline specified by rule 3745-110-04 of the Administrative Code, no owner or operator of a mid-size boiler shall allow or permit the discharge into the ambient air of any NOx emissions in excess of the following:

-Emissions limitations [pounds of NOx emissions per mmBtu]-

Fuel Type	Tangential-fired	Wall-fired	Cyclone-fired	Spreader Stoker-fired	Overfeed Stoker-fired
Gas Only	0.10	0.10	N/A	N/A	N/A
Distillate Oil	0.12	0.12	0.12	N/A	N/A
Residual Oil	0.23	0.23	0.23	N/A	N/A
Coal (Wet Bottom)	0.30	0.30	0.30	N/A	N/A
Coal (Dry Bottom)	0.30	0.30	0.30	0.30	0.30

(C) Large boilers.

Except as otherwise provided in paragraphs (J) to (L) of this rule, on and after the compliance deadline specified by rule 3745-110-04 of the Administrative Code, no owner or operator of a large boiler shall allow or permit the discharge into the ambient air of any NOx emissions in excess of the following:

-Emissions Limitations [pounds of NOx emissions per mmBtu]-

Fuel Type	Tangential-fired	Wall-fired	Cyclone-fired	Spreader Stoker-fired	Overfeed Stoker-fired
Gas Only	0.10	0.10	N/A	N/A	N/A
Distillate Oil	0.12	0.12	0.12	N/A	N/A
Residual Oil	0.23	0.23	0.23	N/A	N/A
Coal (Wet Bottom)	0.30	0.30	0.30	N/A	N/A
Coal (Dry Bottom)	0.30	0.30	0.30	0.30	0.30

(D) Very large boilers.

Except as otherwise provided in paragraphs (J) to (L) of this rule, on and after the compliance deadline specified by rule 3745-110-04 of the Administrative Code, no owner or operator of a very large boiler shall allow or permit the discharge into the ambient air of any NOx emissions in excess of the following:

-Emissions Limitations [pounds of NOx emissions per mmBtu]-

Fuel Type	Tangential-fired	Wall-fired	Cyclone-fired	Spreader Stoker-fired	Overfeed Stoker-fired
Gas Only	0.10	0.10	N/A	N/A	N/A
Distillate Oil	0.12	0.12	0.12	N/A	N/A
Residual Oil	0.23	0.23	0.23	N/A	N/A
Coal (Wet Bottom)	0.30	0.30	0.30	N/A	N/A
Coal (Dry Bottom)	0.30	0.30	0.30	0.30	0.30

(E) Stationary combustion turbine:

Except as otherwise provided in paragraphs (J) to (L) of this rule, on and after the compliance deadline specified by rule 3745-110-04 of the Administrative Code, no owner or operator of a stationary combustion turbine shall allow or permit the discharge into the ambient air of any NOx emissions in excess of the following:

(1) Simple cycle turbines.

(a) Less than 3.5 megawatts.

(i) 150.0 ppmvd, corrected to fifteen per cent oxygen, for combustion turbines firing only natural gas fuel, for both mechanical drive and electrical generation.

(ii) 200.0 ppmvd corrected to fifteen per cent oxygen, for combustion turbines firing distillate oil or diesel fuel, for both mechanical drive and electrical generation.

(b) 3.5 megawatts up to, and including 25.0 megawatts.

(i) 42.0 ppmvd, corrected to fifteen per cent oxygen, for combustion turbines firing only natural gas fuel, for both mechanical drive and electrical generation.

(ii) 96.0 ppmvd, corrected to fifteen per cent oxygen, for combustion turbines firing distillate oil or diesel fuel, for both mechanical drive and electrical generation.

(c) Greater than 25.0 megawatts and less than 50.0 megawatts.

(i) 42.0 ppmvd, corrected to fifteen per cent oxygen, for combustion turbines firing only natural gas fuel.

(ii) 96.0 ppmvd, corrected to fifteen per cent oxygen, for combustion turbines firing distillate oil or diesel fuel.

(d) Equal to or greater than 50.0 megawatts.

(i) 42.0 ppmvd, corrected to fifteen per cent oxygen, for combustion turbines firing only natural gas fuel.

(ii) 96.0 ppmvd, corrected to fifteen per cent oxygen, for combustion turbines firing distillate oil or diesel fuel.

(2) Combined cycle turbines.

(a) Less than 3.5 megawatts.

(i) 150.0 ppmvd, corrected to fifteen per cent oxygen, for combustion turbines firing only natural gas fuel, for both mechanical drive and electrical generation.

(ii) 200.0 ppmvd corrected to fifteen per cent oxygen, for combustion turbines firing distillate oil or diesel fuel, for both mechanical drive and electrical generation.

(b) 3.5 megawatts up to, and including 25.0 megawatts.

(i) 42.0 ppmvd, corrected to fifteen per cent oxygen, for combustion turbines firing only natural gas fuel, for both mechanical drive and electrical generation.

(ii) 96.0 ppmvd, corrected to fifteen per cent oxygen, for combustion turbines firing distillate oil or diesel fuel, for both mechanical drive and electrical generation.

(c) Greater than 25.0 megawatts and less than 50.0 megawatts.

(i) 42.0 ppmvd, corrected to fifteen per cent oxygen, for combustion turbines firing only natural gas fuel.

(ii) 96.0 ppmvd, corrected to fifteen per cent oxygen, for combustion turbines firing distillate oil or diesel fuel.

(d) Equal to or greater than 50.0 megawatts.

(i) 42.0 ppmvd, corrected to fifteen per cent oxygen, for combustion turbines firing only natural gas fuel.

(ii) 96.0 ppmvd, corrected to fifteen per cent oxygen, for combustion turbines firing distillate oil or diesel fuel.

(F) Stationary internal combustion engine.

Except as otherwise provided in paragraphs (J) to (L) of this rule, on and after the compliance deadline specified by rule 3745-110-04 of the Administrative Code, no owner or operator of a stationary internal combustion engine shall allow or permit the discharge into the ambient air of any NOx emissions in excess of the following:

(1) For rich burn engines which burn only gaseous fuels, 3.0 grams per horsepower-hour for engines which are greater than two thousand horsepower.

(2) For lean burn engines which burn only gaseous fuels, 3.0 grams per horsepower-hour for engines which are greater than two thousand horsepower.

(3) For engines which burn only diesel fuel or distillate oil, 3.0 grams per horsepower-hour for engines which are greater than two thousand horsepower.

(4) For engines which burn dual fuels, 3.0 grams per horsepower-hour for engines which are greater than two thousand horsepower.

(G) Reheat furnaces.

Except as otherwise provided in paragraphs (J) to (L) of this rule, and excluding furnaces subject to a source-specific NOx emission limit established in this rule, on and after the compliance deadline specified by rule 3745-110-04 of the Administrative Code, no owner or operator of a reheat furnace with a maximum heat input capacity of greater than 50.0 mmBtu/hr shall allow or permit the discharge into the ambient air of any NOx emissions in excess of 0.09 lb/mmBtu.

(H) The emissions limits specified in paragraphs (A) to (G) of this rule or pursuant to paragraph (J) of this rule shall be based on the following:

(1) The average of three one-hour stack test runs if stack testing is used to demonstrate compliance; or

(2) A twenty-four-hour daily heat input-weighted average if a continuous emissions monitor is used to demonstrate compliance. A thirty-day rolling heat input-weighted average emission rate may be used to demonstrate compliance with the appropriate emission limit from October first to April thirtieth.

Determine the twenty-four-hour daily heat input-weighted average NOx emission rate based on the heat input-weighted average of the block hourly arithmetic average emission rates during each twenty-four-hour daily period from twelve a.m. to twelve a.m. the following day using continuous emissions monitor data. The block hourly heat input-weighted average emission rate must be calculated for each one-hour period starting with the period twelve a.m. to one a.m. and continuing through until the last period eleven p.m. to twelve a.m.; or, starting with the period twelve p.m. to one p.m. and continuing through the last period eleven a.m. to twelve p.m. The thirty-day rolling heat input-weighted average must be the average of the twenty-four-hour daily heat input-weighted NOx emission rate.

(I) Emission averaging programs.

(1) An owner or operator of a source which is subject to this chapter may propose an emission averaging program in lieu of the applicable emission limit(s) specified in paragraphs (A) to (G) of this rule or established in accordance with paragraph (J) of this rule. Both affected sources under rule 3745-110-02 of the Administrative Code and non-affected sources are allowed to be utilized in the averaging program, to the extent that reductions are real, quantifiable and enforceable and are in excess of any state or federal requirements. Any proposed emission averaging program shall comply with all of the following requirements:

(a) Specify the RACT emission limit for each affected source in rule 3745-110-02 of the Administrative Code involved in the emission averaging program;

(b) Specify a clearly enforceable proposed emission limit for each source or group of sources involved in the emission averaging program;

(c) Result in actual reductions in NOx emissions that are equal to or greater than the actual emission reductions that would be required by this rule if an emission averaging program were not employed; and

(d) Achieve compliance with the proposed emission limits in accordance with the compliance deadlines in rule 3745-110-04 of the Administrative Code.

(e) Reductions allowed under the emission averaging program are those reductions that are real, quantifiable and enforceable and are in excess of any state or federal requirements. For purposes of determining the reductions, the actual emissions in tons per year, from all sources included in the averaging program, are subtracted from the lesser of either the actual annual average emissions prior to when the actual reduction occurs or the allowable emissions. A shutdown is creditable only to the extent that the owner or operator can demonstrate to the satisfaction of the director that the shutdown does not correspond to load-shifting or other activity which results in or could result in an equivalent or greater emission increase and that the reduction accounts for any increase in NOx emissions from other sources as a result of the shutdown.

(f) Owners or operators must submit a report to the director by March thirty-first of each year demonstrating that the equivalent reduction requirement in paragraph (I)(1)(c) of rule 3745-110-03 of the Administrative Code has been achieved for the previous calendar year.

(2) Any emission averaging program approved by the director shall be submitted to and approved by the United States environmental protection agency as a revision of the Ohio state implementation plan. An emission averaging program shall not be federally enforceable until the United States environmental protection agency approves the program as part of the Ohio state implementation plan.

(J) RACT studies for stationary sources.

(1) For any affected source of NOx emissions at an affected facility that is not subject to the emissions limits specified in paragraphs (A) to (G) of this rule, or that is subject to the emissions limits specified in paragraphs (A) to (G) of this rule but the owner or operator claims that the applicable limit is technically infeasible and/or economically unreasonable (i.e. not cost-effective) to achieve,

the owner or operator shall conduct a detailed engineering study to determine the technical and economic feasibility of reducing the NOx emissions and to define RACT for the source. The detailed engineering study shall be conducted by an engineering consulting firm or other person or persons experienced in the field of air pollution control, and it shall provide the following information:

(a) The complete facility name and address.

(b) The name, title, address and telephone number of the owner or operator's representative within the company who shall be the contact person for this facility regarding the engineering study and affected sources.

(c) The name, title, address and telephone number of the official who is responsible for approval of the engineering study.

(d) The standard industrial classification code number(s) which are applicable to the facility's operation.

(e) The following general information for each affected source:

(i) Ohio environmental protection agency application number(s);

(ii) Company identification;

(iii) Source description;

(iv) Month and year installed;

(v) Normal operating schedule (hours per day, days per week, and weeks per year);

(vi) Annual production rates for each of the three full calendar years preceding the effective date of this rule;

(vii) Average and maximum daily production rates for each of the three full calendar years preceding the effective date of this rule; and

(viii) The type of control equipment employed and the date installed.

(f) A plot plan which shows the general layout of the facility and the affected source(s).

(g) The following emissions data for each affected source:

(i) Average daily NOx emissions (pounds per day of operation) based upon the highest average daily production rate for each of the three full

calendar years preceding the effective date of this rule or any other year that may be representative of the highest average daily emissions;

[Comment: The average daily production rate for a calendar year may be calculated in the following manner:

$$\text{Average Daily Production Rate} = \frac{\text{[total production during the calendar year]}}{\text{[number of days production occurred during the calendar year]}}$$

Repeat the calculation for each of the three calendar years preceding the effective date of this rule. the highest value of these three years is the representative value used to calculate the average daily NOx emissions per year.]

(ii) Maximum daily NOx emissions (pounds per day of operation) based upon the highest maximum daily production rate for each of the three full calendar years preceding the effective date of this rule or any year that may be more representative of the highest maximum daily emissions;

(iii) Annual NOx emissions (tons per year) based upon the highest annual production rate for each of the three full calendar years preceding the effective date of this rule or any year period that may be more representative of the annual production rate;

(iv) Documentation of the efficiency of the existing control equipment; and

(v) Documentation of any emissions testing which has been performed.

(h) A detailed discussion of the technical feasibility of employing each of the following types of control measures for each affected source (or combination of sources):

(i) Low-NOx burners;

(ii) Close coupled or separated over-fire ports;

(iii) Flue gas recirculation;

(iv) Low NOx burners with external flue gas recirculation;

(v) Burners out of service;

(vi) Steam/water injection;

(vii) Dry low-NOx burners;

(viii) Ignition timing retard;

(ix) Separate circuit after-cooling;

(x) Fuel emulsification;

(xi) Selective noncatalytic reduction;

(xii) Nonselective catalytic reduction;

(xiii) Selective catalytic reduction using urea ammonia and methane as reducing agents;

(xiv) Incineration (for sources other than boilers);

(xv) Scrubbing (for sources other than boilers);

(xvi) Process modification;

(xvii) Fuel switching;

(xviii) Adjustment of air/fuel ratio (for internal combustion engines only);

(xix) Low excess air;

(xx) Mid-kiln firing;

(xxi) Mid-kiln air injection;

(xxii) Gaseous fuels reburn; and

(xxiii) Any other such RACT alternatives not listed in paragraph (J)(1)(h) of this rule that may be applicable to an affected source, or as are proposed by the owner or operator.

A detailed engineering discussion is not required for those control measures which are not applicable to a particular source.

(i) For each type of control measure that is determined to be technically feasible, an estimate of the control efficiency that can be achieved.

(j) For each control measure that is determined to be technically feasible, an estimate of the capital cost, annualized cost (including capital and operating

costs), and the cost-effectiveness (annual dollars per ton of NOx removed annually).

(k) A comparison and discussion of the advantages and disadvantages of the control options that are determined to be technically feasible.

(l) A recommended definition of RACT for the source, including enforceable production limits, emissions limits, control efficiencies, and/or operating requirements.

(m) An expeditious schedule for implementing the recommended definition of RACT, including milestones for awarding contracts, initiating construction, completing construction, and performing emissions testing, if necessary, to demonstrate compliance with the approved definition of RACT.

(n) In the engineering study, all calculations of the NOx emissions, including all assumptions made, shall be documented clearly and in detail. In addition, the capital and operating costs and the cost-effectiveness estimates shall be calculated in a manner that is consistent with the Ohio environmental protection agency, division of air pollution control document entitled "Guidance for Estimating Capital and Annual Costs of Air Pollution Systems," or the most recent edition of the "United States environmental protection agency air pollution control cost manual."

(2) Any definition of RACT and schedule of compliance for an affected source that are approved by the director shall be submitted to and approved by the United States environmental protection agency as a revision of the Ohio state implementation plan.

(3) For any source that is subject to an emissions limit(s) contained in paragraphs (A) to (G) of this rule, if the director approves a definition of RACT and a schedule of compliance for the source pursuant to paragraph (J) of this rule, the source shall no longer be subject to the emissions limit(s) contained in paragraphs (A) to (G) of this rule.

For any source that is subject to an emission limit(s) contained in paragraph (A) to (G) of this rule, if the director disapproves a definition of RACT and a schedule of compliance for the source pursuant to paragraph (J) of this rule, or if the RACT study determines the applicable NOx emission limit(s) contained in paragraphs (A) to (G) of this rule is technically feasible and economically reasonable (i.e., cost-effective) to achieve, or if the director disapproves of a variance application pursuant to paragraph (L) of this rule, the source remains subject to the emission limit(s) contained in paragraphs (A) to (G) of this rule and the applicable compliance deadline specified in paragraph (B) of rule 3745-110-04 of the Administrative Code.

(4) If, within the five years prior to December 22, 2007, the Ohio environmental protection agency has defined best available technology, pursuant to section 3704.01 of the Revised Code, for NOx emissions from a source which is subject to paragraph (J) of this rule, and the owner or operator is employing or has committed to employ the best available technology, the owner or operator may provide the following information to the director in satisfaction of the requirements of paragraph (J)(1) of this rule:

(a) All information required by paragraphs (J)(1)(a), (J)(1)(b), (J)(1)(d), (J)(1)(e) and (J)(1)(g) of this rule.

(b) Copies of the documents and technical information that support the existing best available technology determination.

(c) The name, title, address and telephone number of the official who is responsible for the information submitted in accordance with paragraph (J)(4) of this rule.

If upon review of this information, the director determines that the information does not or may not indicate that the definition of best available technology satisfies the requirements of this chapter, the director shall so notify the owner or operator, and the owner or operator shall conduct a full RACT engineering study in accordance with paragraph (J)(1) of this rule.

(K) The requirements of paragraphs (A) to (G) of this rule shall not apply to the following sources:

(1) Any industrial boiler having a maximum heat input of less than or equal to twenty mmBtu/hr.

(2) Any emergency standby boiler, stationary internal combustion engine, or stationary combustion turbine which operates less than five hundred hours during any consecutive twelve-month period. However, the owner or operator of the emergency standby engine, boiler, or turbine shall maintain for a period of not less than three years, in a bound log book, or other format acceptable to the director, a list of the dates and number of hours the emergency standby engine operated.

(3) Any stationary internal combustion engine having an energy output capacity of less than two thousand horsepower.

(4) Any stationary combustion turbine having an energy input capacity of less than twenty mmBtu/hr.

(5) Any start-up unit located at an electric generating facility.

(6) Any black start unit located at an electric generating facility.

(7) Any peaking unit.

(8) Any space heating unit.

(9) Any auxiliary boiler.

(10) Any CO boiler.

(11) Any research and development source.

(12) Any jet engine test cell.

(13) Any engine testing operation.

(14) Any air pollution control device.

(15) Any municipal waste combustor.

(16) Any source other than a boiler, gas turbine or internal combustion engine that has the potential to emit less than twenty-five tons per year of NOx.

(17) Any affected source issued a valid air operating permit by Ohio environmental protection agency that restricts such affected source to twenty-five tons per year or less of NOx emissions.

(18) Any boiler, stationary internal combustion engine, or stationary combustion turbine subject to the United States environmental protection agency clean air interstate rule contained in 70 FR 25162.

(19) Any boiler subject to paragraph (C)(1) of rule 3745-14-01 of the Administrative Code (NOx SIP call).

(20) Any affected source that is has been issued a permit-to-install that is subject to best available control technology or lowest achievable emission rate standards.

(21) Any affected source whose utilization in less than ten per cent of its capacity factor on an annual average basis over a three-year rolling period and less than twenty per cent of its capacity factor in any year of the three-year rolling period.

(L) Any affected facility that cannot comply with the applicable requirements set forth in this rule because of extraordinary reasons beyond the affected facility's reasonable control may apply in writing to the director for a variance. The variance application shall be prepared in accordance with the provisions specified in rule 3745-31-09 of the Administrative Code and shall only be granted provided the requirements of

paragraph (C)(1)(b) of rule 3745-31-09 of the Administrative Code are met. No variance may be granted under this paragraph that does not provide for eventual compliance with this rule.

(M) On and after May 12, 2011, "Northeast Ohio Regional Sewer District - Southerly Wastewater Treatment Center" or any subsequent owner or operator of the "Northeast Ohio Regional Sewer District - Southerly Wastewater Treatment Center" facility located at 6000 Canal road, Cuyahoga Heights, Ohio shall comply with the following NOx emission limitations:

(1) Boiler B002, rated at sixty-nine mmBtu/hr, shall not exceed a NOx emission rate of 0.15 lb/mmBtu; and

(2) Boiler B003, rated at 92.99 mmBtu/hr, shall not exceed a NOx emission rate of 0.15 lb/mmBtu.

(N) On and after May 12, 2011, "ArcelorMittal Cleveland Inc." (13-18-00-1613) or any subsequent owner or operator of the "ArcelorMittal Cleveland Inc." facility located at 3060 Eggers avenue, Cleveland, Ohio shall comply with the following NOx emission limitations:

--

Emissions Unit	Description	NOx Emission Limitation
P049	Anneal - North	0.10 lb/mmBtu
P050	Anneal - South	0.10 lb/mmBtu
P071	Continuous Galvanizing Line	0.23 lb/mmBtu
P903	C5 Blast Furnace: Stoves	0.06 lb/mmBtu
P904	C6 Blast Furnace: Stoves	0.06 lb/mmBtu
P905 and P906	No. 1 BOF: Ladle Preheaters	0.10 lb/mmBtu
P925 and P926	No. 2 BOF: Ladle Preheaters	0.10 lb/mmBtu
P046	Slab-Pusher Reheat Furnace No. 1 rated at 602.6 mmBtu/hr	0.35 lb/mmBtu
P047	Slab-Pusher Reheat Furnace No. 2 rated at 602.6 mmBtu/hr	0.35 lb/mmBtu
P048	Slab-Pusher Reheat Furnace No. 3 rated at 602.6 mmBtu/hr	0.35 lb/mmBtu

(O) On and after May 12, 2011, "Republic Engineered Products" or any subsequent owner or operator of the "Republic Engineered Products" facility located at 1807

East 28th street, Lorain, Ohio shall comply with the following NOx emission limitations:

(1) Walking beam furnace P071, rated at two hundred six mmBtu/hr, shall not exceed a NOx emission rate of 0.15 lb/mmBtu; and

(2) Bloom reheat furnace P081, rated at 421.6 mmBtu/hr, shall not exceed a NOx emission rate of 0.132 lb/mmBtu.

(P) On and after May 12, 2011, "United States Steel Lorain Tubular Operations" or any subsequent owner or operator of the "United States Steel Lorain Tubular Operations" facility located at 2199 East 28th street, Lorain, Ohio shall comply with the following NOx emission limitations:

(1) Number 3 seamless mill Q and T tempering furnace P003, rated at one hundred twelve mmBtu/hr, shall not exceed 0.068 lb/mmBtu;

(2) Number 3 seamless mill number 2 reheat furnace P037, rated at 58.8 mmBtu/hr, shall not exceed 0.15 lb/mmBtu; and

(3) Number 4 seamless mill reheat furnace P040, rated at 50.9 mmBtu/hr, shall not exceed 0.15 lb/mmBtu.

(Q) On and after the effective date of this rule, "Charter Steel" or any subsequent owner or operator of the "Charter Steel" facility located at 4300 East 49th street, Cuyahoga Heights, Ohio shall comply with the following NOx emission limitation:

Bar mill reheat furnace PO29, rated at 165.0 mmBtu/hr, shall not exceed 0.11 lb/mmBtu.

(R) On and after the effective date of this rule, "BASF Catalysts, LLC" or any subsequent owner or operator of the "BASF Catalysts, LLC" facility located at 120 Pine street, Elyria, Ohio shall comply with the following NOx emission limitations:

(1) Calciners P009, P010, P080, P102, and P103 shall not exceed 1.86 lbs/hr (200.0 ppmvd) when operating the selective catalytic reduction (SCR) system; and

(2) Calciners P009, P010, P080, P102, and P103 shall not exceed 3.4 lbs/hr (250.0 ppmvd) when operating the caustic/chemical Tri-Mer scrubber.

(S) On and after the effective date of this rule, "Carmeuse Lime, Inc., Grand River Operation" or any subsequent owner or operator of the "Carmeuse Lime, Inc., Grand River Operation" facility located at 15 Williams street, Grand River, Ohio shall comply with the following NOx emission limitation:

Rotary lime kilns P001 and P002 (kilns #4 and #5), with a maximum process weight rate of 54.5 tons/hr of limestone per kiln, shall not exceed a NOx emission rate of 6.0 lbs/ton of lime produced.

(T) On and after the effective date of this rule, "Ross Incineration Services, Inc.," or any subsequent owner or operator of the "Ross Incineration Services, Inc.," facility located at 36790 Giles road, Grafton, Ohio shall comply with the following NOx emission limitation:

Hazardous waste incinerator N001, with a rated maximum capacity of 26,057.0 lbs/hr of waste materials, shall not exceed 158.1 lbs/hour, based on a rolling twenty-four hour average.

(U) On and after the effective date of this rule, "Emerald Performance Materials, LLC" or any subsequent owner or operator of the "Emerald Performance Materials, LLC" facility located at 240 West Emerling avenue, Akron, Ohio shall comply with the following NOx emission limitation:

NOx emissions from the coal-fired boiler B008, rated at 115.0 mmBtu/hr, shall not exceed 0.67 lb/mmBtu.

[Comment: Boiler B008 is used both for steam production and as a control device for a process waste stream (containing nitrogen compounds) to achieve continuous compliance with the Polymers and Resins Maximum Achievable Control Technology (MACT) standard. The established NOx emission limitation of 0.67 lb/mmBtu, in lieu of the compliant NOx emission limitation of 0.30 lb/mmBtu for coal-fired boilers, will remain in effect as long as the boiler continues to serve as a control device for nitrogen containing compounds.]

Effective: 07/18/2013

R.C. 119.032 review dates: 05/02/2013 and 07/18/2018

CERTIFIED ELECTRONICALLY
Certification

07/08/2013
Date

Promulgated Under: 119.03
Statutory Authority: 3704.03(E)
Rule Amplifies: 3704.03(A), 3704.03(E)
Prior Effective Dates: 12/22/07

3745-110-04 **Compliance deadlines.**

(A) Certification and permit application requirements.

(1) By not later than April 21, 2008, any owner or operator of a source subject to paragraphs (A) to (G) of rule 3745-110-03 of the Administrative Code and which is not subject to paragraph (A)(2) of this rule shall either:

(a) Certify in writing to the director that such source is in compliance with all requirements of rule 3745-110-03 of the Administrative Code. Such certification shall include: equipment description, Ohio environmental protection agency permit application number(s) (if assigned), and all necessary data (consistent with the appropriate permit application appendices) and calculations which confirm the compliance status. The certification shall also include an application for a permit-to-operate such source if such source does not possess an effective permit; or

(b) Submit an application for a permit-to-operate or an application for a modification to a permit-to-operate in accordance with either rule 3745-35-02 of the Administrative Code or Chapter 3745-77 of the Administrative Code. Such application shall include a compliance program which will bring the source into compliance with all the requirements of rule 3745-110-03 of the Administrative Code as expeditiously as practicable, but in no event later than the date specified in paragraph (B) of this rule.

(2) Any owner or operator of a source subject to paragraph (J) of rule 3745-110-03 of the Administrative Code shall submit a complete RACT study by not later than December 22, 2008.

(B) RACT compliance deadline.

Any owner or operator of a source which is subject to the requirements of rule 3745-110-03 of the Administrative Code, including any source for which the director approves a definition of RACT pursuant to paragraph (J) of rule 3745-110-03 of the Administrative Code and has not approved an alternative schedule for implementing the RACT, shall achieve and demonstrate compliance with said emission limitations and control requirements as expeditiously as practicable, but in no event later than the following, and shall maintain compliance thereafter:

(1) For facilities conducting a RACT study:

(a) By not later than two years after approval by the director of the RACT study, if combustion modifications are required to demonstrate compliance with the applicable NOx emission limitations; or

(b) By not later than three years after approval by the director of the RACT study, if add-on controls are required to demonstrate compliance with the applicable emission limitations.

(2) For facilities not conducting a RACT study:

(a) By not later than December 22, 2009, if combustion modifications are required to demonstrate compliance with the applicable emission limitations; or

(b) By not later than December 22, 2010, if add-on controls are required to demonstrate compliance with the applicable emission limitations.

Effective: 07/18/2013

R.C. 119.032 review dates: 05/02/2013 and 07/18/2018

CERTIFIED ELECTRONICALLY
Certification

07/08/2013
Date

Promulgated Under: 119.03
Statutory Authority: 3704.03(E)
Rule Amplifies: 3704.03(A), 3704.03(E)
Prior Effective Dates: 12/22/2007

3745-110-05 **Compliance methods.**

[Comment: For dates of non-regulatory government publications, publications of recognized organizations and associations, federal rules, and federal statutory provisions referenced in this rule, see paragraph (C) of rule 3745-110-01 of the Administrative Code titled "Reference to materials."]

(A) Any owner or operator of a source which is subject to the requirements of rule 3745-110-03 of the Administrative Code shall demonstrate compliance with the applicable emissions limit(s) by performing emission tests in accordance with USEPA Method 7, 7a, 7c, 7d, or 7e, and any additional approved USEPA methods as applicable.

(B) Any continuous emissions monitoring system for NOx that is employed to ensure ongoing compliance with an applicable emission limitation shall meet the requirements of Performance Specification 2, 40 CFR Part 60, Appendix B and quality assurance procedures contained in 40 CFR Part 60, Appendix F or 40 CFR Part 75. .

(C) For the compliance demonstrations performed pursuant to paragraph (A) of this rule, the owner or operator shall obtain any additional test data (i.e., flow rates, oxygen concentrations, moisture contents, etc.), continuous diluent monitoring data (carbon dioxide or oxygen), or source fuel usage or horsepower data, concurrent with the required compliance demonstration in order to convert the emission test results or monitoring data to the units of the applicable limit. Compliance demonstrations shall be performed that are representative of the normal operating modes, including fuel types or fuel blends employed and shall exclude periods of startup, shutdown, malfunction, and low load operating conditions.

(D) For paragraphs (B), (C), and (D) of rule 3745-110-03 of the Administrative Code, compliance demonstrations shall be performed while the affected boiler is operating at or as close as possible to its maximum permitted operating capacity.

(E) For paragraph (E) of rule 3745-110-03 of the Administrative Code, compliance demonstrations shall be performed while the affected stationary combustion turbine is operating at or as close as possible to its maximum permitted operating capacity.

(F) For paragraph (F) of rule 3745-110-03 of the Administrative Code, compliance demonstrations shall be performed while the affected internal combustion engine is operating at or as close as practically possible to its maximum permitted operating capacity.

(G) For paragraph (G) of rule 3745-110-03 of the Administrative Code, compliance demonstrations shall be performed while the affected reheat furnace is operating at or as close as practically possible to its maximum permitted operating capacity.

Effective: 07/18/2013

R.C. 119.032 review dates: 05/02/2013 and 07/18/2018

CERTIFIED ELECTRONICALLY
Certification

07/08/2013
Date

Promulgated Under: 119.03
Statutory Authority: 3704.03(E)
Rule Amplifies: 3704.03(A), 3704(E)
Prior Effective Dates: 12/22/2007

Chapter 3745-111: ERC Banking Program

Contact: Jennifer Avellana 614-644-3625
Jennifer.avellana@epa.ohio.gov

3745-111-01 **Definitions.**

[Comment: For dates of non-regulatory government publications, publications of recognized organizations and associations, federal rules, and federal statutory provisions referenced in this rule, see paragraph (K) of this rule titled "referenced materials.".]

(A) Except as otherwise provided in this rule, the definitions in rule 3745-31-01 of the Administrative Code shall apply to this chapter.

(B) "Emission reduction credit" or "ERC" means a surplus, quantifiable and permanent unit of reduction in actual emissions from an air contaminant source, as defined in rule 3745-31-01 of the Administrative Code, which is expressed in tons of pollutant per year, and that is federally enforceable no later than at the time of use.

(C) "Ohio EPA" means the Ohio environmental protection agency.

(D) "Permanent" means that emission reductions used to offset emission increases are assured for the life of the corresponding increase through a federally enforceable mechanism, regardless of whether the corresponding increase is limited or unlimited in duration.

(E) "Quantifiable" means that the amount, rate and characteristics of emissions and emission reductions can be determined or measured through a reliable and replicable method established by an applicable law or approved by the director.

(F) "Reasonable further progress" or "RFP" means any incremental emission reductions required to fulfill the requirements of paragraphs (b)(1)(A) and (c)(2)(B) of Section 182 of the Clean Air Act or specified in the Ohio state implementation plan.

(G) "Surplus" means emission reductions made below an applicable source baseline which are below allowable emission rates and are not relied upon in the Ohio state implementation plan or required attainment demonstration of the national ambient air quality standards and have not been required by any applicable laws. Emission reductions can be used for offsets or ERCs to the extent allowed under federal law.

(H) "Un-verified ERC" means an owner or operator has identified an emission reduction that may be surplus, quantifiable and permanent but the emission reduction has not been verified and deemed creditable by the Ohio EPA in accordance with this chapter and can not be transferred or used when participating in the banking program until it becomes a verified ERC.

(I) "Verified" means the Ohio EPA has reviewed the information supplied by the owner or operator in accordance with this chapter to ensure the emission reductions are creditable as permanent, surplus and quantifiable ERCs and are approvable for transfer or use at the time of verification.

(J) "Verified ERC" means an emission reduction that is surplus, quantifiable and permanent as verified by the Ohio EPA in accordance with this chapter.

(K) Referenced materials. This chapter includes references to certain subject matter or materials. The text of the referenced materials is not included in the rules contained in this chapter. Information on the availability of the referenced materials as well as the date of, and the particular edition or version of the material is included in this rule. For materials subject to change, only the specific versions specified in this rule are referenced. Unless otherwise noted, material is referenced as it exists on the effective date of this rule. Except for subsequent annual publication of existing (unmodified) Code of Federal Regulation compilations, any amendment or revision to a referenced document is not applicable unless and until this rule has been amended to specify the new dates.

(1) Availability. The referenced materials are available as follows:

(a) Clean Air Act and all sections thereof; information and copies may be obtained by writing to: "Superintendent of Documents, Attn: New Orders, PO Box 371954, Pittsburgh, PA 15250-7954." The full text of the Act as amended in 1990 is also available in electronic format at www.epa.gov/oar/caa/. A copy of the Act is also available for inspection and use at most public libraries and "The State Library of Ohio."

(b) Code of Federal Regulations (CFR). Information and copies may be obtained by writing to: "Superintendent of Documents, Attention: New Orders, PO Box 371954, Pittsburgh, PA 15250-7954." The full text of the CFR is also available in electronic format at http://www.gpo.gov/fdsys/. The CFR compilations are also available for inspection and use at most public libraries and "The State Library of Ohio."

(c) United States Code (USC). Information and copies may be obtained by writing to: "Superintendent of Documents, Attn: New Orders, PO Box 371954, Pittsburgh, PA 15250-7954." The full text of the United States Code is also available in electronic format at http://www.gpo.gov/fdsys/. The USC compilations are also available for inspection and use at most public libraries and "The State Library of Ohio."

(2) Referenced materials.

(a) 40 CFR 81.336; "Designation of Area for Air Quality Planning Purposes-Ohio;" as published in the July 1, 2014 Code of Federal Regulations.

(b) 40 CFR Part 51; "Requirements for preparation, adoption, and submittal of implementation plans;" as published in the July 1, 2014 Code of Federal Regulations.

(c) 40 CFR Part 51, Appendix S; "Emission Offset Interpretative Ruling;" as published in the July 1, 2014 Code of Federal Regulations.

(d) 40 CFR Part 52; "Approval and promulgation of implementation plans;" as published in the July 1, 2014 Code of Federal Regulations.

(e) Clean Air Act; contained in 42 USC 7401 to 7671q; "The Public Health and Welfare-Air Pollution Prevention and Control;" published May 7, 2014 in the 2012 Edition of the United States Code.

(f) Section 173 of the Clean Air Act; contained in 42 USC 7503; "Permit requirements;" published May 7, 2014 in the 2012 Edition of the United States Code.

(g) Section 182 of the Clean Air Act; contained in 42 USC 7511a; "Plan submissions and requirements;" published May 7, 2014 in the 2012 Edition of the United States Code.

(h) Title IV of the Clean Air Act; contained in 42 USC 7651 to 7651o; "Acid Deposition Control;" published May 7, 2014 in the 2012 Edition of the United States Code.

Effective: 06/25/2015

Five Year Review (FYR) Dates: 04/03/2015 and 06/25/2020

CERTIFIED ELECTRONICALLY
Certification

06/15/2015
Date

Promulgated Under: 119.03
Statutory Authority: 3704.03(F)
Rule Amplifies: 3704.03(A), 3704.03(F)
Prior Effective Dates: 1/8/09

3745-111-02 **ERC banking program for the purpose of enabling the acquisition of offsets.**

[Comment: For dates of non-regulatory government publications, publications of recognized organizations and associations, federal rules, and federal statutory provisions referenced in this rule, see paragraph (K) of rule 3745-111-01 of the Administrative Code.]

(A) Purpose and general clause.

(1) The purpose of this chapter is to establish a voluntary statewide ERC banking program for the purpose of enabling the acquisition of offsets that shall be implemented in accordance with this chapter.

(2) Nothing in this chapter shall be construed to be a mandatory requirement except when a person, as specified in paragraph (B)(2) of this rule, chooses to voluntarily participate in the ERC banking program. At such time, the requirements of this chapter shall apply.

(3) Nothing in this chapter shall be construed to restrict the director's authority to attain and maintain the national ambient air quality standards of the Ohio state implementation plan requirements.

(4) Nothing in this chapter shall be construed to restrict the use of offsets consistent with Chapter 3745-31 of the Administrative Code; Section 173 of the Clean Air Act; 40 CFR Part 51; 40 CFR Part 51, Appendix S; or 40 CFR Part 52.

(B) Applicability.

(1) The use of ERCs under this chapter applies to volatile organic compounds and oxides of nitrogen as ozone precursors, sulfur dioxide, carbon monoxide, PM10, PM 2.5 and lead. At the director's discretion, the use of ERCs may also apply to any other pollutant, or precursor thereof, for which a national ambient air quality standard has been set.

(2) Voluntary participants in this program may include one of the following:

(a) Any major stationary source or major modification that is to be constructed in an area designated in 40 CFR 81.336 as nonattainment for an air pollutant for which the major stationary source or major modification is major.

(b) Any person who voluntarily chooses to participate in the ERC banking program.

For any ERC generating source that voluntarily participates in the ERC banking program located outside the state of Ohio, this chapter and

paragraph (A) of rule 3745-31-27 of the Administrative Code shall be applicable.

(C) General requirements.

(1) The generation, transfer and use of ERCs shall be consistent with the Ohio state implementation plan, the Clean Air Act, rules promulgated under the Clean Air Act, this chapter, and Chapter 3745-31 of the Administrative Code.

(2) The use of verified ERCs in a nonattainment area shall result in emission reductions consistent with the requirements for reasonable further progress for the nonattainment area and any attainment demonstration specified in the Ohio state implementation plan.

(3) Emission reductions made to correct violations or inaccurate reporting of any applicable emission standard of limitation or emission reduction resulting from a source, process, or process equipment in violation shall not be eligible to generate ERCs to be used or transferred under this chapter. Emission reductions in excess of what is required to correct a violation may be eligible to generate ERCs if they meet the requirements contained in this chapter and Chapter 3745-31 of the Administrative Code.

(4) No ERCs may be allowed for replacing one volatile organic compound with another of lesser reactivity, except where allowed under paragraph (H) of rule 3745-31-24 of the Administrative Code.

(5) Nothing in this chapter shall be construed to obviate the need to obtain a permit-to-install or PTIO under Chapter 3745-31 of the Administrative Code, or a Title V permit under Chapter 3745-77 of the Administrative Code. The use of verified ERCs which would be inconsistent with the requirements contained in Chapter 3745-31 of the Administrative Code is prohibited.

(D) ERC discounting.

The director may reduce the amount of ERCs under the following conditions:

(1) Discounting for attaining or maintaining the national ambient air quality standards or Ohio state implementation plan.

The director may reduce the quantity of available ERCs in order to attain or maintain the national ambient air quality standards of the Ohio state implementation plan requirements, provided that the director will exercise such authority through the Ohio state implementation plan process prior to removing ERCs from the bank established under this chapter.

Effective: 06/25/2015

Five Year Review (FYR) Dates: 04/03/2015 and 06/25/2020

CERTIFIED ELECTRONICALLY
Certification

06/15/2015
Date

Promulgated Under: 119.03
Statutory Authority: 3704.03(F)
Rule Amplifies: 3704.03(A), 3704.03(F)
Prior Effective Dates: 1/8/09

3745-111-03 **ERC generation for the purpose of enabling the acquisition of offsets.**

[Comment: For dates of non-regulatory government publications, publications of recognized organizations and associations, federal rules, and federal statutory provisions referenced in this rule, see paragraph (K) of rule 3745-111-01 of the Administrative Code.]

(A) Acceptable emission reduction techniques.

When voluntarily participating in the ERC banking program, ERCs shall be generated by the following emission reduction techniques:

(1) Permanent shutdown of one or more existing air contaminant sources or a facility.

(2) Permanent curtailment in production or operating hours at an existing air contaminant source or facility operating in accordance with applicable laws, provided the curtailment results in an actual emissions reduction and is not otherwise required to comply with the Clean Air Act.

(3) The installation and operation of pollution control equipment that reduces emissions below the level required from an existing air contaminant source or facility to less than that required by applicable laws.

(4) Technologies, materials or processes or process equipment modifications which are not otherwise required by the Clean Air Act.

(5) The incidental emissions reduction of air pollutants contained in paragraph (B)(1) of rule 3745-111-02 of the Administrative Code resulting from reductions of a collateral pollutant required under the Clean Air Act shall be permitted, provided the emission reduction meets the requirements of this chapter.

(6) Acceptable mobile source ERC generation that reduces actual emissions shall be approved by the director on a case-by-case basis.

(7) Any such other emission reduction technique, that reduces actual emissions, approved by the director on a case-by-case basis.

(B) ERC baseline determination.

The emission baseline from which ERCs may be generated shall be established to determine the amount of actual emissions from an air contaminant source, process, or process equipment for the purpose of generating ERCs that result in actual emission reductions. The emission baseline shall be expressed in tons of pollutant emitted per year.

(1) In establishing the baseline used to calculate ERCs, the Ohio EPA shall consider emission characteristics and operating conditions which include, at a minimum, the emission rate, capacity utilization, hours of operations and seasonal emission rate variations, in accordance with the following:

(a) The definition of actual emissions contained in rule 3745-31-01 of the Administrative Code.

(b) The baseline emissions rate may not be inconsistent with the emissions reported in the most recently filed or amended version of all relevant emission statements for the baseline period filed pursuant to Chapter 3745-78 of the Administrative Code for which fees have been paid, when applicable.

(c) The baseline emissions rate shall not exceed the allowable emissions rate taking into consideration the definition under paragraph (G) of rule 3745-111-01 of the Administrative Code.

(2) The baseline determination requirements under rule 3745-31-24 of the Administrative Code shall apply.

(C) ERC initial quantification.

(1) When participating in the ERC banking program, emission monitoring and quantification protocols to quantify emissions, emission reductions, and the generation of ERCs shall be reliable, enforceable, and replicable and may include the following:

(a) Continuous emission monitoring, stack testing, sampling of fuels and materials, or other direct measurements.

(b) Calculations using equations that are a function of process and control equipment.

(c) Mass-balance calculations.

(d) Emission factors, emission calculation methods, or emission quantification protocols approved for use at the time of emission reduction generation by the Ohio EPA.

(e) For facilities in which emission rates vary over time, an Ohio EPA approved alternative method for quantifying the reduction and ensuring the continued emissions reduction, if the method is approved by the director.

(f) Measurement methods, procedures, and calculations shall be approved by the director.

(D) ERC generation notification.

(1) When participating in the ERC banking program, an ERC generation notification shall be submitted in a form and manner prescribed by the director and shall include the following information, at a minimum:

(a) Verified ERC generation.

(i) The name of the owner and operator of the air contaminant source or facility.

(ii) The initial intended use of the ERCs.

[Comment: identifying an intended use does not obligate the generator to that identified use and does not prohibit the generator from requesting a change to the identified use while the ERCs are in the bank The intended use information will provide information to the public regarding which ERCs are available for transfer.]

(iii) The intended or actual date of initiation of emission reductions.

(iv) Identification of the type of pollutant and quantity of ERCs being generated.

(v) A description of the emission reduction techniques used to generate the ERCs.

(vi) Full characterization of the emission reductions in accordance with this chapter.

(b) Un-verified ERC generation.

(i) Information consistent with paragraph (D)(1)(a)(i) to (D)(1)(a)(v) of this rule.

(ii) An estimation of the emission reductions and the basis of the estimation.

(c) Except for paragraph (E)(2) of this rule, un-verified ERCs may be submitted via an ERC generation notification for participation in the ERC banking program only by the facility that actually generated the emission reductions, the current owner or operator, or a successor owner or operator.

(E) Shutdown notification and potential forfeiture of ERCs.

(1) Regardless of any owner or operator choosing to participate in the voluntary banking program, for each air contaminant source or facility permanent shutdown that may result in ERCs, the director may provide a notification through certified mail that requests the owner or operator of the facility to inform Ohio EPA if the owner or operator will participate in the ERC

banking program. The owner or operator may submit a response, through certified mail, electronic mail or fax, with one of the following:

(a) The owner or operator may inform Ohio EPA that they request to retain possession of the ERCs and intend to do one of the following:

(i) Participate in the banking program which shall include submittal of information required under paragraph (D)(1)(a) of this rule for approval of verified ERCs.

(ii) Participate in the ERC banking program which shall include submittal of information required under paragraph (D)(1)(b) of this rule for approval of un-verified ERCs.

(iii) Participate in the ERC banking program at a future date or not participate in the ERC banking program.

(b) The owner or operator may inform Ohio EPA that they request the director to obtain possession of the ERCs to use at the director's discretion.

(2) Any owner or operator who does not respond to the above shutdown notification shall subject the ERCs to paragraph (E)(2)(d) of this rule provided the conditions of paragraphs (E)(2)(a) to (E)(2)(c) of this rule are met.

(a) The facility has permanently shutdown and either of the following:

(i) The owner or operator of the facility is undergoing court-supervised liquidation, has had its articles of incorporation or its license to conduct business in Ohio revoked.

(ii) The owner of operator of the facility has otherwise taken formal steps to discontinue conducting business in Ohio.

(b) The owner, operator or legal representative responsible for the assets of the facility was provided the notification pursuant to paragraph (E)(1) of this rule but did not provide a response.

(c) The director made every effort to contact the owner, operator or legal representative, including public notice in a prominent newspaper in the area of the permanently shutdown air contaminant source or facility.

(d) The facility shall forfeit possession of the ERCs to Ohio EPA, upon the date the permanent shutdown is certified with, or verified by Ohio EPA for use at the director's discretion. Forfeited ERCs shall be made available free of charge by Ohio EPA to a stationary source, at the director's discretion, for use as emission offsets provided the use of ERCs meet the requirements of Chapter 3745-31 of the Administrative Code and this chapter. In the event the new or modified stationary source is not installed, the ERCs shall be forfeited back to Ohio EPA.

(F) Any mobile source or stationary source generating an ERC may be verified by Ohio EPA through compliance monitoring and reporting programs.

Effective: 06/25/2015

Five Year Review (FYR) Dates: 04/03/2015 and 06/25/2020

CERTIFIED ELECTRONICALLY
Certification

06/15/2015
Date

Promulgated Under: 119.03
Statutory Authority: 3704.03(F)
Rule Amplifies: 3704.03(A), 3704.03(F)
Prior Effective Dates: 1/8/09

3745-111-04 **ERC transfer and use for the purpose of enabling the acquisition of offsets.**

(A) Conditions for approval of the use of ERCs for enabling the acquisition of emission offsets.

The use of ERCs from an existing air contaminant source or facility for the purpose of offsetting emissions of a proposed major stationary source or major modification (whether or not under the same ownership) shall meet the requirements contained in rule 3745-31-22 of the Administrative Code, including that there will be reasonable progress, as determined by the director, toward attainment of the applicable national ambient air quality standard.

(1) The owner or operator of the proposed air contaminant source or facility shall secure approval from the director to use the ERCs for the purpose of offsetting emissions prior to the time of use.

(2) ERCs may not be used in an area with a higher nonattainment classification than the one in which they were generated.

(3) ERCs that are used shall be surplus and quantifiable at the time of use in accordance with paragraphs (E) and (G) of rule 3745-111-01 of the Administrative Code.

(4) An owner or operator proposing new or increased emissions shall demonstrate that sufficient offsetting ERCs, at the ratio specified in rule 3745-31-26 of the Administrative Code have been acquired from a nonattainment area that meets the requirements of paragraph (B) of this rule.

(5) A stationary source located in the state of Ohio may use ERCs generated by a source located in a neighboring state only upon the approval of both the director and the appropriate authority within the neighboring state. ERCs generated in another state may not be used at a facility within the state of Ohio unless the facility's generated ERCs are enforceable by the neighboring state and by the Ohio EPA in accordance with this chapter and paragraph (A) of rule 3745-31-27 of the Administrative Code.

(B) Location of emission offsets.

Location of offsetting emissions shall meet the requirements of rule 3745-31-25 of the Administrative Code, paragraph (B) of rule 3745-31-26 of the Administrative Code, and rule 3745-31-27 of the Administrative Code.

(C) Administrative procedures.

(1) Transfer and use of ERCs for the purpose of offsetting emissions shall meet the administrative procedures of rule 3745-31-27 of the Administrative Code.

(2) Mobile source ERCs.

A mobile source owner or operator may generate ERCs, consistent with paragraph (A)(6) of rule 3745-111-03 of the Administrative Code, for the purpose of offsetting emissions of a proposed major stationary source or major modification wishing to locate in an area that meets the location requirements of paragraph (B) of this rule provided the offset ratio requirements of rule 3745-31-26 of the Administrative Code are met. The emission offsets shall come from existing mobile sources. The use of mobile source ERCs must be submitted as a Ohio state implementation plan revision or must be contained in a federally enforceable permit. The use of mobile source ERCs under this paragraph shall be approved by the director on a case-by-case basis.

(D) ERC transfer and use.

When any owner of ERCs elects to participate in the ERC banking program, the following are applicable:

(1) Only verified ERCs may be transferred and used through a transfer or use notification in accordance with paragraph (E) of this rule.

(2) Verified ERCs generated in accordance with paragraph (A)(1) of rule 3745-111-03 of the Administrative Code, resulting from the permanent shutdown of an existing air contaminant source or facility, may not be transferred or used prior to Ohio EPA receiving notification from the responsible official of a Title V facility, as defined in rule 3745-77-01 of the Administrative Code, or from the person with signatory authority under rule 3745-31-02 of the Administrative Code for a facility that is not Title V, certifying the permanence of the shutdown.

(3) Verified ERCs generated in accordance with paragraphs (A)(2) to (A)(7) of rule 3745-111-03 of the Administrative Code, may not be transferred until the ERCs are permanent and federally enforceable in accordance with paragraph (C)(2) of rule 3745-111-02 of the Administrative Code.

(E) Notification of transfer or use.

When participating in the ERC banking program, an ERC transfer or use notification shall be submitted in a form and manner prescribed by the director and shall include the following information, at a minimum, except paragraph (E)(6) of this rule shall be optional:

(1) The name of the owner or operator of the air contaminant source or facility generating the ERC or the name of the person transferring the ERC.

(2) The name of the person, owner or operator of the air contaminant source or facility, receiving or using the ERC.

(3) The intended use of the ERCs.

[Comment: identifying an intended use does not obligate the person receiving the ERCs to that identified use and does not prohibit the person receiving the ERCs from requesting a change to the identified use while the ERCs are in the bank. The intended use information will provide information to the public regarding which ERCs are available for transfer.]

(4) Identification of the type of pollutant and quantity of verified ERCs being transferred or used.

(5) Identification of the ERC certificate number associated with the ERCs, and if transfer or use of the ERCs identified in the certificate are in part, the exact ERCs contained in the banking system that are included in the transaction.

(6) The cost, in dollars per ton, of ERCs transferred or used shall be optional.

(F) Public notice.

Consistent with the requirements of Chapter 3745-31 of the Administrative Code, the Ohio EPA shall provide the public with notice of owners or operators proposing to use verified ERCs at the time they are made federally enforceable.

Effective: 06/25/2015

Five Year Review (FYR) Dates: 04/03/2015 and 06/25/2020

CERTIFIED ELECTRONICALLY
Certification

06/15/2015
Date

Promulgated Under: 119.03
Statutory Authority: 3704.03(F)
Rule Amplifies: 3704.03(A), 3704.03(F)
Prior Effective Dates: 1/8/09

3745-111-05 **ERC banking system.**

The Ohio EPA shall establish a voluntary ERC banking system to track the deposit and withdrawal of ERCs and the generation, transfer and use of ERCs in accordance with this chapter.

(A) Prior to deposit of ERCs into the banking system, the Ohio EPA shall do one of the following:

(1) Verify the information submitted by the owner or operator in accordance with paragraph (D)(1) of rule 3745-111-03 of the Administrative Code and classify the ERCs as verified ERCs in the banking system.

(2) Review the information submitted by the owner or operator in accordance with paragraph (D)(2) of rule 3745-111-03 of the Administrative Code and classify the estimated ERCs as un-verified ERCs in the banking system.

(B) The banking system shall identify the following:

(1) Whether the ERCs are un-verified or verified ERCs.

(2) The applicable criteria pollutant.

(3) The quantity of ERCs.

(4) A description of the source.

(5) The county in which the ERCs were generated.

(6) The ERC generation date. The ERC generation date entered in the banking system shall reflect the anticipated date of emissions reduction and shall be amended as necessary to reflect the actual emissions reduction date.

(C) ERC certificate.

(1) Upon registration and deposit of verified ERCs into the ERC banking system an ERC certificate with a unique ERC certificate number shall be generated by the director to the verified ERC holder. Un-verified ERCs will receive an ERC certificate upon verification by Ohio EPA.

(2) If the owner of an ERC certificate uses or transfers ERCs to a new owner in part or whole, the director shall generate an ERC certificate to the new owner reflecting the transferred amount of ERCs and, if applicable, shall issue an ERC certificate to the current owner reflecting the amount of ERCs remaining after the transfer or use. Upon issuance of a permit allowing the use of verified ERCs for the purpose of offsetting emissions, or upon transfer of ERCs, the banking transactions shall be updated in the banking system, including identifying any remaining ERCs available for transferring or use after the transaction.

(D) Withdrawal of ERCs from the banking system.

Nothing in this rule shall prohibit the transfer of ERCs that do not meet the requirements of paragraph (D) of rule 3745-111-04 of the Administrative Code if the ERCs are withdrawn from the banking system. ERCs and ERC certificates may be withdrawn by the current owner from the ERC banking system at any time, upon written notice to the director. Upon withdrawal, all ERC certificates shall be terminated and the ERCs shall be withdrawn from the banking system.

(E) The director shall publish a list of deposited ERCs into the banking system that are available for transfer and use on the Ohio EPA website and the list shall be updated on a thirty day basis, at a minimum.

(F) Supporting documentation.

The Ohio EPA shall maintain supporting documentation, including permit decisions, generator information and other information required to sufficiently characterize the emissions, which shall allow the Ohio EPA and ERC users to determine if the ERCs are suitable for use at a specific facility.

(G) Annual publication.

The director may produce an annual publication related to banking transactions.

(1) The publication may include, at a minimum, the costs, in dollars per ton, of ERCs purchased for transfer or use during the calendar year, the pollutant type and the county where the ERC was generated, transferred or used.

(2) Information on the identity of any party involved in the ERC transactions and data used to calculate the purchase price of the ERCs shall not be included in the publication.

(3) The document may be published by the first of March of the following year.

Effective: 06/25/2015

Five Year Review (FYR) Dates: 04/03/2015 and 06/25/2020

CERTIFIED ELECTRONICALLY
Certification

06/15/2015
Date

Promulgated Under: 119.03
Statutory Authority: 3704.03(F)
Rule Amplifies: 3704.03(A), 3704.03(F)
Prior Effective Dates: 1/8/09

Chapter 3745-112: Consumer Products

Contact: Alan Harness 614-644-4838
Alan.Harness@epa.ohio.gov

3745-112-01 **Definitions.**

[Comment: For dates on non-regulatory government publications, publications of recognized organizations and associations, federal rules, and federal statutory provisions referenced in this rule, see paragraph (C) of this rule titled "Referenced Materials."]

(A) Except as otherwise provided in this rule, the definitions in rule 3745-15-01 of the Administrative Code shall apply to this chapter.

(B) As used in this chapter.

(1) "Adhesive" means any product that is used to bond one surface to another by attachment. Adhesive does not include products used on humans and animals, adhesive tape, contact paper, wallpaper, shelf liners, or any other product with an adhesive incorporated onto or in an inert substrate. For contact adhesive, construction, panel, and floor covering adhesive, and general purpose adhesive only, adhesive also does not include units of product, less packaging, which weigh more than one pound and consist of more than sixteen fluid ounces. This limitation does not apply to aerosol adhesives.

(2) "Adhesive remover" means a product designed to remove adhesive from either a specific substrate or a variety of substrates. Adhesive removers do not include products that remove adhesives intended for use on humans or animals.

(a) "Floor or wall covering adhesive remover" means a product designed or labeled to remove floor or wall coverings and associated adhesive from the underlying substrate.

(b) "Gasket or thread locking adhesive remover" means a product designed or labeled to remove gaskets or thread locking adhesives. Products labeled for dual use as a paint stripper and gasket remover and/or thread locking adhesive remover are considered gasket or thread locking adhesive remover.

(c) "General purpose adhesive remover" means a product designed or labeled to remove cyanoacrylate adhesives as well as non-reactive adhesives or residue from a variety of substrates. General purpose adhesive remover includes, but is not limited to: products that remove thermoplastic adhesives; pressure sensitive adhesives; dextrine or starch based adhesives; casein glues; rubber or latex-based adhesives; as well as products that remove stickers; decals; stencils; or similar materials. General purpose adhesive remover does not include floor or wall covering adhesive remover.

(d) "Specialty adhesive remover" means a product designed to remove reactive adhesives from a variety of substrates. Reactive adhesives include adhesives that require a hardener or catalyst in order for the bond to occur. Examples of reactive adhesives include, but are not limited to: epoxies; urethanes;

silicones. Specialty adhesive remover does not include gasket or thread locking adhesive remover.

For the purpose of paragraph (B)(2) of this rule, the term adhesive shall mean a substance used to bond one or more materials. Adhesive includes, but is not limited to: caulks; sealants; glues; or similar substances used for the purpose of forming a bond.

(3) "Aerosol adhesive" means any adhesive packaged as an aerosol product in which the spray mechanism is permanently housed in a non-refillable can designed for hand-held application without the need for ancillary hoses or spray equipment. Aerosol adhesives include: special purpose spray adhesives; mist spray adhesives; and web spray adhesives.

(4) "Aerosol cooking spray" means any aerosol product designed either to reduce sticking on cooking and baking surfaces or to be applied on food, or both.

(5) "Aerosol product" means a pressurized spray system that dispenses product ingredients by means of a propellant contained in a product or a product's container, or by means of a mechanically induced force. Aerosol product does not include pump spray.

(6) "Agricultural use" means the use of any pesticide or method or device for the control of pests in connection with the commercial production, storage or processing of any animal or plant crop. Agricultural use does not include the sale or use of pesticides in properly labeled packages or containers which are intended for: home use; use in structural pest control; or industrial or institutional use. For the purpose of this definition only:

(a) "Home use" means use in a household or its immediate environment.

(b) "Structural pest control" means a use requiring a license under Chapter 901:5-11 of the Administrative Code.

(c) "Industrial use" means use for or in a manufacturing, mining, or chemical process or use in the operation of factories, processing plants, and similar sites.

(d) "Institutional use" means use within the lines of, or on property necessary for the operation of buildings such as hospitals, schools, libraries, auditoriums, and office complexes.

(7) "Air freshener" means any consumer product including, but not limited to, sprays, wicks, powders, and crystals, designed for the purpose of masking odors, or freshening, cleaning, scenting, or deodorizing the air. "Air freshener" does not include products that are used on the human body, products that function primarily as cleaning products as indicated on a product label, or toilet/urinal care products, disinfectant products claiming to deodorize by killing germs on

surfaces, or institutional/industrial disinfectants when offered for sale solely through institutional and industrial channels of distribution. Air freshener does include spray disinfectants and other products that are expressly represented for use as air fresheners, except institutional and industrial disinfectants when offered for sale through institutional and industrial channels of distribution. To determine whether a product is an air freshener, all verbal and visual representations regarding product use on the label or packaging and in the product's literature and advertising may be considered. The presence of, and representations about, a product's fragrance and ability to deodorize (resulting from surface application) shall not constitute a claim of air freshening.

(8) "All other carbon-containing compounds" means all other compounds which contain at least one carbon atom and are not a table B compound, as defined in this rule, or a LVP-VOC.

(9) "All other forms" means all consumer product forms for which no form-specific VOC standard is specified. Unless specified otherwise by the applicable VOC standard, all other forms include, but are not limited to: solids; liquids; wicks; powders; crystals; and cloth or paper wipes (towelettes).

(10) "Alternative control plan" or "ACP" means any emissions averaging program as approved by the CARB.

(11) "Antimicrobial hand or body cleaner or soap" means a cleaner or soap which is designed to reduce the level of microorganisms on the skin through germicidal activity, and is regulated as an over-the-counter drug by the United States food and drug administration. Antimicrobial hand or body cleaner or soap includes, but is not limited to: antimicrobial hand or body washes/cleaners; food handler hand washes; healthcare personnel hand washes; pre-operative skin preparations and surgical scrubs. Antimicrobial hand or body cleaner or soap does not include: prescription drug products; antiperspirants; astringent/toner; deodorant; facial cleaner or soap; general-use hand or body cleaner or soap; hand dishwashing detergent (including antimicrobial); heavy-duty hand cleaner or soap; medicated astringent/medicated toner; and rubbing alcohol.

(12) "Antiperspirant" means any product including, but not limited to: aerosols; roll-ons; sticks; pumps; pads; creams; and squeeze-bottles that are intended by the manufacturer to be used to reduce perspiration in the human axilla by at least twenty per cent in at least fifty per cent of a target population.

(13) "Anti-static product" means a product that is labeled to eliminate, prevent, or inhibit the accumulation of static electricity. Anti-static product does not include: electronic cleaner; floor polish or wax; floor coating; and products that meet the definition of aerosol coating product or architectural coating.

(14) "Architectural coating" means a coating applied to stationary structures and their appurtenances, to mobile homes, to pavements, or to curbs.

(15) "ASTM" means the American society for testing and materials.

(16) "Astringent/toner" means any product not regulated as a drug by the United States food and drug administration which is applied to the skin for the purpose of cleaning or tightening pores. This category also includes clarifiers and substrate-impregnated products. This category does not include: any hand, face, or body cleaner or soap product; medicated astringent/medicated toner; personal fragrance product; cold cream; lotion; or antiperspirant.

(17) "Automotive brake cleaner" means a cleaning product designed to remove oil, grease, brake fluid, brake pad material or dirt from motor vehicle brake mechanisms.

(18) "Automotive hard paste wax" means an automotive wax or polish that is:

(a) Designed to protect and improve the appearance of automotive paint surfaces;

(b) A solid at room temperature; and

(c) Contains zero per cent water by formulation.

(19) "Automotive instant detailer" means a product designed for use in a pump spray that is applied to the painted surface of automobiles and wiped off prior to the product being allowed to dry.

(20) "Automotive rubbing or polishing compound" means a product designed primarily to remove oxidation, old paint, scratches or swirl marks, and other defects from the painted surfaces of motor vehicles without leaving a protective barrier.

(21) "Automotive wax, polish, sealant or glaze" means a product designed to seal out moisture, increase gloss, or otherwise enhance a motor vehicle's painted surfaces. Automotive wax, polish, sealant or glaze includes, but is not limited to, products designed for use in auto-body repair shops and drive-through car washes, as well as products designed for the general public. Automotive wax, polish, sealant or glaze does not include: automotive rubbing or polishing compounds; automotive wash and wax products; surfactant-containing car wash products; and products designed for use on unpainted surfaces such as bare metal, chrome, glass, or plastic.

(22) "Automotive windshield washer fluid" means any liquid designed for use in a motor vehicle windshield washer system either as an antifreeze or for the purpose of cleaning, washing, or wetting the windshield. Automotive windshield washer fluid does not include fluids placed by the manufacturer in a new vehicle.

(23) "Bathroom and tile cleaner" means a product designed to clean tile or surfaces in bathrooms. Bathroom and tile cleaner does not include products designed primarily to clean toilet bowls, toilet tanks, or urinals.

(24) "Bug and tar remover" means a product labeled to remove either or both of the following from painted motor vehicle surfaces without causing damage to the finish:

(a) Biological-type residues such as insect carcasses and tree sap; and

(b) Road grime, such as road tar, roadway paint markings, and asphalt.

(25) "CARB" means the California air resource board.

(26) "Carburetor or fuel-injection air intake cleaners" means a product designed to remove fuel deposits, dirt, or other contaminants from a carburetor, choke, throttle body of a fuel-injection system, or associated linkages. Carburetor or fuel-injection air intake cleaners does not include products designed exclusively to be introduced directly into the fuel lines or fuel storage tank prior to introduction into the carburetor or fuel injectors.

(27) "Carpet and upholstery cleaner" means a cleaning product designed for the purpose of eliminating dirt and stains on rugs, carpeting, and the interior of motor vehicles and/or on household furniture or objects upholstered or covered with fabrics such as wool, cotton, nylon or other synthetic fabrics. Carpet and upholstery cleaner includes, but is not limited to, products that make fabric protectant claims. Carpet and upholstery cleaner does not include general purpose cleaners; spot removers; vinyl or leather cleaners; dry cleaning fluids; or products designed exclusively for use at industrial facilities engaged in furniture or carpet manufacturing.

(28) "Charcoal lighter material" means any combustible material designed to be applied on, incorporated in, added to, or used with charcoal to enhance ignition. Charcoal lighter material does not include: electrical starters and probes; metallic cylinders using paper tinder; natural gas; propane; or fat wood.

(29) "Colorant" means any pigment or coloring material used in a consumer product for an aesthetic effect, or to dramatize an ingredient.

(30) "Construction, panel, and floor covering adhesive" means any one-component adhesive that is designed exclusively for the installation, remodeling, maintenance, or repair of:

(a) Structural and building components that include, but are not limited to: beams; trusses; studs; paneling (drywall or dry wall laminates; fiberglass reinforced plastic; plywood; particle board; insulation board; pre-decorated hardboard or tile-board; etc.), ceiling and acoustical tile; molding; fixtures;

countertops or countertop laminates; cove or wall bases; and flooring or sub-flooring; or

(b) Floor or wall coverings that include, but are not limited to: wood or simulated wood covering; carpet; carpet pad or cushion; vinyl-backed carpet; flexible flooring material; non resilient flooring material; mirror tiles and other types of tiles; and artificial grass.

Construction, panel, and floor covering adhesive does not include floor seam sealer.

(31) "Consumer" means any person who seeks, purchases, or acquires any consumer product for personal, family, household, or institutional use. Persons acquiring a consumer product for resale are not consumers for that product.

(32) "Consumer product" means a chemically formulated product used by household and institutional consumers including, but not limited to: detergents; cleaning compounds; polishes; floor finishes; cosmetics; personal care products; home, lawn, and garden products; disinfectants; sanitizers; aerosol paints; and automotive specialty products. Consumer product does not include other paint products, furniture coatings, or architectural coatings. As used in this paragraph consumer product shall also refer to aerosol adhesives, including aerosol adhesives used for consumer, industrial, and commercial uses.

(33) "Contact adhesive" means an adhesive that:

(a) Is designed for application to both surfaces to be bonded together;

(b) Is allowed to dry before the two surfaces are placed in contact with each other;

(c) Forms an immediate bond that is impossible, or difficult, to reposition after both adhesive-coated surfaces are placed in contact with each other; and

(d) Does not need sustained pressure or clamping of surfaces after the adhesive-coated surfaces have been brought together using sufficient momentary pressure to establish full contact between both surfaces.

Contact adhesive does not include rubber cements that are primarily intended for use on paper substrates. Contact adhesive also does not include vulcanizing fluids that are designed and labeled for tire repair only.

(34) "Contact adhesive - general purpose" means any contact adhesive that is not a contact adhesive - special purpose.

(35) "Contact adhesive - special purpose" means a contact adhesive that:

(a) Is used to bond melamine-covered board, unprimed metal, unsupported vinyl, Teflon, ultra-high molecular weight polyethylene, rubber, high pressure laminate or wood veneer one sixteenth inch or less in thickness to any porous or nonporous surface, and is sold in units of product, less packaging, that contain more than eight fluid ounces; or

(b) Is used in automotive applications that are:

(i) Automotive under the-hood applications requiring heat, oil or gasoline resistance; or

(ii) Body-side molding, automotive weather strip or decorative trim.

(36) "Container/packaging" means the part or parts of the consumer or institutional product which serve only to contain, enclose, incorporate, deliver, dispense, wrap or store the chemically formulated substance or mixture of substances which is solely responsible for accomplishing the purposes for which the product was designed or intended. Container/packaging includes any article onto or into which the principal display panel and other accompanying literature or graphics are incorporated, etched, printed or attached.

(37) "Crawling bug insecticide" means any insecticide product that is designed for use against ants, cockroaches, or other household crawling arthropods, including, but not limited to, mites, silverfish or spiders. Crawling bug insecticide does not include products designed to be used exclusively on humans or animals, or any house dust mite product. For the purpose of this definition only:

(a) "House dust mite product" means a product whose label, packaging, or accompanying literature states that the product is suitable for use against house dust mites, but does not indicate that the product is suitable for use against ants, cockroaches, or other household crawling arthropods.

(b) "House dust mite" means mites which feed primarily on skin cells shed in the home by humans and pets and which belong to the phylum Arthropoda, the subphylum Chelicerata, the class Arachnida, the subclass Acari, the order Astigmata, and the family Pyroglyphidae.

(38) "Date-code" means the day, month and year on which the consumer product was manufactured, filled, or packaged, or a code indicating such a date.

(39) "Deodorant" means:

(a) For products manufactured before January 1, 2009: any product including, but not limited to, aerosols, roll-ons, sticks, pumps, pads, creams, and squeeze-bottles, that is intended by the manufacturer to be used to minimize odor in the human axilla by retarding the growth of bacteria which cause the decomposition of perspiration.

(b) For products manufactured on or after January 1, 2009: any product including, but not limited to, aerosol, roll-ons, sticks, pumps, pads, creams, and squeeze-bottles, that indicates or depicts on the container or packaging, or on any sticker or label affixed thereto, that the product can be used on or applied to the human axilla to provide a scent and/or minimize odor. A deodorant body spray product that indicates or depicts on the container or packaging, or on any sticker or label affixed thereto, that it can be used on or applied to the human axilla, is a deodorant.

(40) "Deodorant body spray" means:

(a) For products manufactured before January 1, 2009: a personal fragrance product with twenty per cent or less fragrance.

(b) For products manufactured on or after January 1, 2009: a personal fragrance product with twenty per cent or less fragrance, that is designed for application all over the human body to provide a scent. A deodorant body spray product that indicates or depicts on the container or packaging, or on any sticker or label affixed thereto, that it can be used on or applied to the human axilla, is a deodorant.

(41) "Device" means any instrument or contrivance (other than a firearm) which is designed for trapping, destroying, repelling, or mitigating any pest or any other form of plant or animal life (other than man and other than bacteria, virus, or other microorganism on or in living man or other living animals); but not including equipment used for the application of pesticides when sold separately there from.

(42) "Disinfectant" means any product intended to destroy or irreversibly inactivate infectious or other undesirable bacteria, pathogenic fungi, or viruses on surfaces or inanimate objects and whose label is registered under the Federal Insecticide, Fungicide, and Rodenticide Act. Disinfectant does not include: products designed solely for use on human or animals; products designed for agricultural use; products designed solely for use in swimming pools, therapeutic tubs, or hot tubs; and products which, as indicated on the principal display panel or label, are designed primarily for use as bathroom and tile cleaners, glass cleaners, general purpose cleaners, toilet bowl cleaners, or metal polishes.

(43) "Distributor" means any person to whom a consumer product is sold or supplied for the purposes of resale or distribution in commerce, except that manufacturers, retailers, and consumers are not distributors.

(44) "Double phase aerosol air freshener" means an aerosol air freshener with the liquid contents in two or more distinct phases that requires the product container be shaken before use to mix the phases, producing an emulsion.

(45) "Dry cleaning fluid" means any non-aqueous liquid product designed and labeled exclusively for use on fabrics which are labeled for dry clean only (such as clothing or drapery) or s-coded fabrics. Dry cleaning fluid includes, but is not limited to: those products used by commercial dry cleaners and commercial businesses that clean fabrics such as draperies at the customer's residence or work place. Dry cleaning fluid does not include spot remover or carpet and upholstery cleaner.

For the purposes of this definition, s-coded fabric means an upholstery fabric designed to be cleaned only with water-free spot cleaning products as specified by the joint industry fabric standards committee.

(46) "Dusting aid" means a product designed to assist in removing dust and other soils from floors and other surfaces without leaving a wax or silicone based coating. Dusting aid does not include pressurized gas duster.

(47) "Electrical cleaner" means a product labeled to remove heavy soils such as grease, grime, or oil from electrical equipment, including, but not limited to: electric motors; armatures; relays; electric panels; or generators. Electrical cleaner does not include: general purpose cleaner; general purpose degreaser; dusting aid; electronic cleaner; energized electrical cleaner; pressurized gas duster; engine degreaser; anti-static product; or products designed to clean the casings or housings of electrical equipment.

(48) "Electronic cleaner" means a product labeled for the removal of dirt, moisture, dust, flux, or oxides from the internal components of electronic or precision equipment such as circuit boards, and the internal components of electronic devices, including but not limited to: radios; compact disc players; digital video disc players; and computers. Electronic cleaner does not include general purpose cleaner; general purpose degreaser; dusting aid; pressurized gas duster; engine degreaser; electrical cleaner, energized electrical cleaner; anti-static product; or products designed to clean the casings or housings of electronic equipment.

(49) "Energized electrical cleaner" means a product that meets both of the following criteria:

(a) The product is labeled to clean and/or degrease electrical equipment, where cleaning and/or degreasing is accomplished when electrical current exists, or when there is a residual electrical potential from a component, such as a capacitor; and

(b) The product label clearly displays the statements: "energized equipment use only and not to be used for motorized vehicle maintenance, or their parts."

Energized electrical cleaner does not include electronic cleaner.

(50) "Engine degreaser" means a cleaning product designed to remove grease, grime, oil and other contaminants from the external surfaces of engines and other mechanical parts.

(51) "Existing product" means any formulation of the same product category and form sold, supplied, manufactured, or offered for sale in Ohio prior to January 1, 2009, or any subsequently introduced identical formulation.

(52) "Fabric protectant" means a product designed to be applied to fabric substrates to protect the surface from soiling from dirt and other impurities or to reduce absorption of liquid into the fabric's fibers. Fabric protectant does not include waterproofers, products designed for use solely on leather, or products designed for use solely on fabrics which are labeled "for dry clean only" and sold in containers of ten fluid ounces or less.

(53) "Fabric refresher" means a product labeled to neutralize or eliminate odors on: non-laundered fabric including, but not limited to: soft household surfaces; rugs; carpeting; draperies; bedding, automotive interiors; footwear; athletic equipment; clothing; or household furniture or objects upholstered or covered with fabrics such as, but not limited to: wool; cotton; or nylon. Fabric refresher does not include: anti-static product; carpet and upholstery cleaner; soft household surface sanitizers; footwear or leather care product; spot remover; or disinfectant; or products labeled for application to both fabric and human skin. For the purposes of this definition only, soft household surface sanitizer means a product labeled to neutralize or eliminate odors on surfaces listed above whose label is registered as a sanitizer under the Federal Insecticide, Fungicide, and Rodenticide Act.

(54) "Facial cleaner or soap" means a cleaner or soap designed primarily to clean the face. Facial cleaner or soap includes, but is not limited to, facial cleansing creams, semisolids, liquids, lotions, and substrate-impregnated forms. Facial cleaner or soap does not include: prescription drug products; antimicrobial hand or body cleaner or soap; astringent/toner; general-use hand or body cleaner or soap; medicated astringent/medicated toner; or rubbing alcohol.

(55) "Fat wood" means pieces of wood kindling with high naturally-occurring levels of sap or resin which enhance ignition of the kindling. Fat wood does not include any kindling with substances added to enhance flammability, such as wax covered or wax-impregnated wood-based products.

(56) "Flea and tick insecticide" means any insecticide product that is designed for use against fleas, ticks, their larvae, or their eggs. Flea and tick insecticide does not include products that are designed to be used exclusively on humans or animals and their bedding.

(57) "Flexible flooring material" means asphalt, cork, linoleum, no-wax, rubber, seamless vinyl and vinyl composite flooring.

(58) "Floor coating" means an opaque coating that is labeled and designed for application to flooring, including but not limited to, decks, porches, steps, and other horizontal surfaces which may be subject to foot traffic.

(59) "Floor polish or wax" means a wax, polish, or any other product designed to: polish, protect, or enhance floor surfaces by leaving a protective coating that is designed to be periodically replenished. Floor polish or wax does not include: spray buff products; products designed solely for the purpose of cleaning floors; floor finish strippers; products designed for unfinished wood floors; and coatings subject to architectural coatings regulations.

(60) "Floor seam sealer" means any product designed and labeled exclusively for bonding, fusing, or sealing (coating) seams between adjoining rolls of installed flexible sheet flooring.

(61) "Floor wax stripper" means a product designed to remove natural or synthetic floor polishes or waxes through breakdown of the polish or wax polymers, or by dissolving or emulsifying the polish or wax. Floor wax stripper does not include aerosol floor wax strippers or products designed to remove floor wax solely through abrasion.

(62) "Flying bug insecticide" means any insecticide product that is designed for use against flying insects or other flying arthropods, including but not limited to flies, mosquitoes, moths, or gnats. Flying bug insecticide does not include wasp and hornet insecticide, products that are designed to be used exclusively on humans or animals, or any moth-proofing product. For the purposes of this definition only, moth-proofing product means a product whose label, packaging, or accompanying literature indicates that the product is designed to protect fabrics from damage by moths, but does not indicate that the product is suitable for use against flying insects or other flying arthropods.

(63) "Footwear or leather care product" means any product designed or labeled to be applied to footwear or to other leather articles/components, to maintain, enhance, clean, protect, or modify the appearance, durability, fit, or flexibility of the footwear or leather article/component. Footwear includes both leather and non-leather foot apparel. Footwear or leather care product does not include: fabric protectant; general purpose adhesive; contact adhesive; vinyl/fabric/leather/polycarbonate coating; rubber and vinyl protectant; fabric refresher; products solely for deodorizing; or sealant products with adhesive properties used to create external protective layers greater than two millimeters thick.

(64) "Fragrance" means a substance or complex mixture of aroma chemicals, natural essential oils, and other functional components with a combined vapor pressure not in excess of two millimeters of mercury at twenty degrees Celsius, the sole purpose of which is to impart an odor or scent, or to counteract a malodor.

(65) "Furniture coating" means any paint designed for application to room furnishings including, but not limited to: cabinets (kitchen, bath and vanity); tables; chairs; beds; and sofas.

(66) "Furniture maintenance product" means a wax, polish, conditioner, or any other product designed for the purpose of polishing, protecting or enhancing finished wood surfaces other than floors. Furniture maintenance product does not include: dusting aids; wood cleaners, and products designed solely for the purpose of cleaning; and products designed to leave a permanent finish such as stains, sanding sealers and lacquers.

(67) "Gel" means a colloid in which the disperse phase has combined with the continuous phase to produce a semisolid material, such as jelly.

(68) "General purpose adhesive" means any non-aerosol adhesive designed for use on a variety of substrates. General purpose adhesive does not include: contact adhesives; construction, panel, and floor covering adhesives; adhesives designed exclusively for application on one specific category of substrates (i.e., substrates that are composed of similar materials, such as different types of metals, paper products, ceramics, plastics, rubbers, or vinyls); adhesives designed exclusively for use on one specific category of articles (i.e., articles that may be composed of different materials but perform a specific function, such as gaskets, automotive trim, weather-stripping, or carpets).

(69) "General purpose cleaner" means a product designed for general all-purpose cleaning, in contrast to cleaning products designed to clean specific substrates in certain situations. General purpose cleaner includes products designed for general floor cleaning, kitchen or countertop cleaning, and cleaners designed to be used on a variety of hard surfaces.

(70) General purpose degreaser" means any product labeled to remove or dissolve grease, grime, oil and other oil-based contaminants from a variety of substrates, including automotive or miscellaneous metallic parts. General purpose degreaser does not include: engine degreaser; general purpose cleaner; adhesive remover; electronic cleaner; electrical cleaner; energized electrical cleaner; metal polish/cleanser; products used exclusively in solvent cleaning tanks or related equipment; or products that are sold exclusively to establishments which manufacture or construct goods or commodities; and labeled not for retail sale.

For the purpose of this definition solvent cleaning tanks or related equipment includes, but is not limited to: cold cleaners; vapor degreasers; conveyorized degreasers; film cleaning machines; or products designed to clean miscellaneous metallic parts by immersion in a container.

(71) "General-use hand or body cleaner or soap" means a cleaner or soap designed to be used routinely on the skin to clean or remove typical or common dirt and soils. General-use hand or body cleaner or soap includes, but is not limited to: hand or body washes; dual-purpose shampoo-body cleaners; shower or bath

gels; and moisturizing cleaners or soaps. General-use hand or body cleaner or soap does not include: prescription drug products; antimicrobial hand or body cleaner or soap; astringent/toner; facial cleaner or soap; hand dishwashing detergent (including antimicrobial); heavy-duty hand cleaner or soap; medicated astringent/medicated toner; or rubbing alcohol.

(72) "Glass cleaner" means a cleaning product designed primarily for cleaning surfaces made of glass. Glass cleaner does not include products designed solely for the purpose of cleaning optical materials used in eyeglasses, photographic equipment, scientific equipment and photocopying machines.

(73) "Graffiti remover" means a product labeled to remove spray paint, ink, marker, crayon, lipstick, nail polish, or shoe polish, from a variety of non-cloth or non-fabric substrates. Graffiti remover does not include paint remover or stripper, nail polish remover," or spot remover. Products labeled for dual use as both a paint stripper and graffiti remover are considered graffiti removers.

(74) "Hair mousse" means a hairstyling foam designed to facilitate styling of a coiffure and provide limited holding power.

(75) "Hair shine" means any product designed for the primary purpose of creating a shine when applied to the hair. Hair shine includes, but is not limited to, dual use products designed primarily to impart a sheen to the hair. Hair shine does not include: hair spray; hair mousse; hair styling product; hair styling gel; or products whose primary purpose is to condition or hold the hair.

(76) "Hair spray" means:

(a) For products manufactured before January 1, 2009: a consumer product designed primarily for the purpose of dispensing droplets of a resin on and into a hair coiffure which will impart sufficient rigidity to the coiffure to establish or retain the style for a period of time; and

(b) For products manufactured on or after January 1, 2009: a consumer product that is applied to styled hair, and is designed or labeled to provide sufficient rigidity, to hold, retain and/or (finish) the style of the hair for a period of time. Hair spray includes: aerosol hair sprays; pump hair sprays; spray waxes; color, glitter, or sparkle hairsprays that make finishing claims; and products that are both a styling and finishing product. Hair spray does not include spray products that are intended to aid in styling but does not provide finishing of a hairstyle. For the purpose of this definition, finish or finishing means the maintaining and/or holding of previously styled hair for a period of time. For the purpose of this definition, styling means the forming, sculpting, or manipulating the hair to temporarily alter the hair's shape.

(77) "Hair styling gel" means a consumer product manufactured before January 1, 2009 that is a high viscosity, often gelatinous, product that contains a resin and

is designed for the application to hair to aid in styling and sculpting of the hair coiffure.

(78) "Hair styling product" means a consumer product manufactured on or after January 1 2009, that is designed or labeled for the application to wet, damp or dry hair to aid in defining, shaping, lifting, styling and/or sculpting of the hair. Hair styling product includes, but is not limited to: hair balm; clay, cream; creme; curl straightener; gel; liquid; lotion; paste; pomade; putty; root lifter; serum; spray gel; stick; temporary hair straightener; wax; spray products that aid in styling but do not provide finishing of a hairstyle; and leave-in volumizers, detanglers and/or conditioners that make styling claims. Hair styling product does not include: hair mousse; hair shine; hair spray; or shampoos and/or conditioners that are rinsed from the hair prior to styling. For the purpose of this definition, finish or finishing means the maintaining and/or holding of previously styled hair for a period of time. For the purpose of this definition, styling means the forming, sculpting, or manipulating the hair to temporarily alter the hair's shape.

(79) "Heavy-duty hand cleaner or soap" means a product designed to clean or remove difficult dirt and soils such as oil, grease, grime, tar, shellac, putty, printer's ink, paint, graphite, cement, carbon, asphalt, or adhesives from the hand with or without the use of water. Heavy-duty hand cleaner or soap does not include: prescription drug products; antimicrobial hand or body cleaner or soap; astringent/toner; facial cleaner or soap; general-use hand or body cleaner or soap; medicated astringent/medicated toner; or rubbing alcohol.

(80) "Herbicide" means a pesticide product designed to kill or retard a plant's growth, but excludes products that are for agricultural use; or restricted materials that require a permit for use and possession.

(81) "High volatility organic compound" or "HVOC" means any volatile organic compound that exerts a vapor pressure greater than eighty millimeters of mercury when measured at twenty degrees Celsius.

(82) "Household product" means any consumer product that is primarily designed to be used inside or outside of living quarters or residences that are occupied or intended for occupation by individuals, including the immediate surroundings.

(83) "Innovative product exemption" or "IPE" means a determination that a particular consumer product will result in less VOC emissions as compared to a representative compliant consumer product or as compared to the reformulation of the particular product in order to comply with a VOC content limit due to some characteristic of the product formulation, design, delivery system, or other factor. Such determination must be in accordance with paragraphs (L) and (M) of rule 3745-112-04 of the Administrative Code for a chemically formulated consumer product, and be issued by:

(a) CARB pursuant to the consumer products regulations (including all amendments and supplements) at Title 17, Subchapter 8.5, Article 1, Section 94503.5 or Article 2, Section 94511 of the California Code of Regulations; or

(b) The air pollution control agency of another state pursuant to its consumer product regulations, if those consumer product regulations are based on the OTC model rule for consumer products.

(84) "Insecticide" means a pesticide product that is designed for use against insects or other arthropods, but excluding products that are: for agricultural use; or for a use which requires a structural pest control license under Chapter 901:5-11 of the Administrative Code; or restricted materials that require a permit for use and possession.

(85) "Insecticide fogger" means any insecticide product designed to release all or most of its content, as a fog or mist, into indoor areas during a single application.

(86) "Institutional product", "industrial and institutional product" or "I & I product" means a consumer product that is designed for use in the maintenance or operation of an establishment that:

(a) Manufactures, transports, or sells goods or commodities, or provides services for profit; or

(b) Is engaged in the nonprofit promotion of a particular public, educational, or charitable cause.

Establishments include, but are not limited to: government agencies; factories; schools; hospitals; sanitariums; prisons; restaurants; hotels; stores; automobile service and parts centers; health clubs; theaters; or transportation companies. Institutional product does not include household products and products that are incorporated into or used exclusively in the manufacture or construction of the goods or commodities at the site of the establishment.

(87) "Label" means any written, printed, or graphic matter affixed to, applied to, attached to, blown into, formed, molded into, embossed on, or appearing upon any consumer product or consumer product package, for purposes of branding, identifying, or giving information with respect to the product or to the contents of the package.

(88) "Laundry prewash" means a product that is designed for application to a fabric prior to laundering and that supplements and contributes to the effectiveness of laundry detergents and/or provides specialized performance.

(89) "Laundry starch product" means a product that is designed for application to a fabric, either during or after laundering, to impart and prolong a crisp, fresh look

and may also act to help ease ironing of the fabric. Laundry starch product includes, but is not limited to, fabric finish, sizing, and starch.

(90) "Lawn and garden insecticide" means an insecticide product labeled primarily to be used in household lawn and garden areas to protect plants from insects or other arthropods.

(91) "Liquid" means a substance or mixture of substances which is capable of a visually detectable flow as determined under ASTM D4359-90(2000)el. Liquid does not include powders or other materials that are composed entirely of solid particles.

(92) "Lubricant" means a product designed to reduce friction, heat, noise, or wear between moving parts, or to loosen rusted or immovable parts or mechanisms. Lubricant does not include: automotive power steering fluids; products for use inside power generating motors, engines, and turbines, and their associated power-transfer gearboxes; two cycle oils or other products designed to be added to fuels; products for use on the human body; or animals; or products that are sold exclusively to establishments which manufacture or construct goods or commodities and are labeled not for retail sale.

(93) "LVP-VOC" means a chemical compound or mixture that contains at least one carbon atom and meets one of the following:

(a) Has a vapor pressure less than 0.1 millimeters of mercury at twenty degrees Celsius, as determined by CARB method 310; or

(b) Is a chemical compound with more than twelve carbon atoms, or a chemical mixture comprised solely of compounds with more than twelve carbon atoms as verified by formulation data, and the vapor pressure and boiling point are unknown; or

(c) Is a chemical compound with a boiling point greater than two hundred sixteen degrees Celsius, as determined by CARB method 310; or

(d) Is the weight per cent of a chemical mixture that boils above two hundred sixteen degrees Celsius, as determined by CARB method 310.

For the purpose of the definition of LVP-VOC, chemical compound means a molecule of definite chemical formula and isomeric structure, and chemical mixture means a substrate comprised of two or more chemical compounds.

(94) "Manufacturer" means any person who imports, manufactures, assembles, produces, packages, repackages, or re-labels a consumer product.

(95) "Medicated astringent/medicated toner" means any product regulated as a drug by the United States food and drug administration which is applied to the skin for the purpose of cleaning or tightening pores. Medicated astringent/medicated

toner includes, but is not limited to, clarifiers and substrate-impregnated products. Medicated astringent/medicated toner does not include: hand, face, or body cleaner or soap products; personal fragrance products; astringent/toner; cold cream; lotion; antiperspirants; or products that must be purchased with a doctor's prescription.

(96) "Medium volatility organic compound" or "MVOC" means any volatile organic compound that exerts a vapor pressure greater than two millimeters of mercury and less than or equal to eighty millimeters of mercury when measured at twenty degrees Celsius.

(97) "Metal polish/cleanser" means any product designed primarily to improve the appearance of finished metal, metallic, or metallized surfaces by physical or chemical action. To improve the appearance means to remove or reduce stains, impurities, or oxidation from surfaces or to make surfaces smooth and shiny. Metal polish/cleanser includes, but is not limited to, metal polishes used on brass, silver, chrome, copper, stainless steel and other ornamental metals. Metal polish/cleanser does not include: automotive wax, polish, sealant or glaze, wheel cleaner, paint remover or stripper; products designed and labeled exclusively for automotive and marine detailing; or products designed for use in degreasing tanks.

(98) "Mist spray adhesive" means any aerosol adhesive which is not a special purpose spray adhesive and which delivers a particle or mist spray, resulting in the formation of fine, discrete particles that yield a generally uniform and smooth application of adhesive to the substrate.

(99) "Multi-purpose dry lubricant" means any lubricant which is:

(a) Designed and labeled to provide lubricity by depositing a thin film of graphite, molybdenumdisulfide, or polytetrafluoroethylene or closely related fluoropolymer on surfaces, and

(b) Designed for general purpose lubrication, or for use in a wide variety of applications.

(100) "Multi-purpose lubricant" means any lubricant designed for general purpose lubrication, or for use in a wide variety of applications. Multi-purpose lubricant does not include multi-purpose dry lubricants, penetrants, or silicone-based multi-purpose lubricants.

(101) "Multi-purpose solvent" means any organic liquid designed to be used for a variety of purposes, including cleaning or degreasing of a variety of substrates, or thinning, dispersing or dissolving other organic materials. Multi-purpose solvent includes solvents used in institutional facilities, except for laboratory reagents used in analytical, educational, research, scientific or other laboratories. Multi-purpose solvent does not include: solvents used in cold cleaners, vapor degreasers, conveyorized degreasers or film cleaning machines; or solvents that

are incorporated into, or used exclusively in the manufacture or construction of, the goods or commodities at the site of the establishment.

(102) "Nail polish" means any clear or colored coating designed for application to the fingernails or toenails and including, but not limited to, lacquers, enamels, acrylics, base coats and top coats.

(103) "Nail polish remover" means a product designed to remove nail polish and coatings from fingernails or toenails.

(104) "Non-aerosol product" means any consumer product that is not dispensed by a pressurized spray system.

(105) "Non-carbon containing compound" means any compound which does not contain any carbon atoms.

(106) "Non-resilient flooring" means flooring of a mineral content which is not flexible. Non-resilient flooring" includes terrazzo, marble, slate, granite, brick, stone, ceramic tile and concrete.

(107) "Non-selective terrestrial herbicide" means a terrestrial herbicide product that is toxic to plants without regard to species.

(108) "Ohio sales" means the sales (net pounds of product, less packaging and container, per year) in Ohio for either the calendar year immediately prior to the year that the registration is due or, if that data is not available, any consecutive twelve month period commencing no earlier than two years prior to the due date of the registration. If direct sales data for Ohio is not available, sales may be estimated by prorating national or regional sales data by population.

(109) "OTC" means the ozone transport commission.

(110) "Oven cleaner" means any cleaning product designed to clean and to remove dried food deposits from oven walls.

(111) "Paint" means any pigmented liquid, liquefiable, or mastic composition designed for application to a substrate in a thin layer which is converted to an opaque solid film after application and is used for protection, decoration or identification, or to serve some functional purpose such as the filling or concealing of surface irregularities or the modification of light and heat radiation characteristics.

(112) "Paint remover or stripper" means any product designed to strip or remove paints or other related coatings, by chemical action, from a substrate without markedly affecting the substrate. Paint remover or stripper does not include: multi-purpose solvents; paint brush cleaners; products designed and labeled exclusively as graffiti removers; and hand cleaner products that claim to remove paints and other related coatings from skin.

(113) "Paint thinner" means any volatile liquid used for reducing the viscosity of coating compositions or components.

(114) "Penetrant" means a lubricant designed and labeled primarily to loosen metal parts that have bonded together due to rusting, oxidation, or other causes. Penetrant does not include multi-purpose lubricants that claim to have penetrating qualities, but are not labeled primarily to loosen bonded parts.

(115) "Person" means any individual, public or private corporation, political subdivision, government agency, department or bureau of the state, municipality, industry, co-partnership, association, firm, trust, estate or any legal entity whatsoever.

(116) "Personal fragrance product" means any product which is applied to the human body or clothing for the primary purpose of adding a scent or masking a malodor, including cologne, perfume, aftershave, and toilet water. Personal fragrance product does not include: deodorant; medicated products designed primarily to alleviate fungal or bacterial growth on feet or other areas of the body; mouthwashes, breath fresheners and deodorizers; lotions, moisturizers, powders or other skin care products used primarily to alleviate skin conditions such as dryness and irritations; products designed exclusively for use on human genitalia; soaps, shampoos, and products primarily used to clean the human body; and fragrance products designed to be used exclusively on non-human animals.

(117) "Pesticide" means and includes any substance or mixture of substances labeled, designed, or intended for use in preventing, destroying, repelling or mitigating any pest, or any substance or mixture of substances labeled, designed, or intended for use as a defoliant, desiccant, or plant regulator, provided that the term pesticide will not include any substance, mixture of substances, or device which the United States environmental protection agency does not consider to be a pesticide.

(118) "Pressurized gas duster" means a pressurized product labeled to remove dust from a surface solely by means of mass air or gas flow, including surfaces such as photographs, photographic film negatives, computer keyboards, and other types of surfaces that cannot be cleaned with solvents. Pressurized gas duster does not include dusting aid.

(119) "Principal display panel or panels" means that part, or those parts of a label that are so designed as to most likely be displayed, presented, shown or examined under normal and customary conditions of display or purchase. Whenever a principal display panel appears more than once, all requirements pertaining to the principal display panel shall pertain to all such principal display panels.

(120) "Product brand name" means the name of the product exactly as it appears on the principal display panel of the product.

(121) "Product category" means the applicable category which best describes the product as listed in the table of standards of paragraph (A) of rule 3745-112-03 of the Administrative Code.

(122) "Product form," for the purpose of complying with rule 3745-112-06 of the Administrative Code only, means the applicable form which most accurately describes the product's dispensing form as follows:

A = Aerosol product

S = Solid

P = Pump spray

L = Liquid

SS = Semisolid

O = Other

(123) "Propellant" means a liquefied or compressed gas that is used in whole or in part, such as a co-solvent, to expel a liquid or any other material from the same self-pressurized container or from a separate container.

(124) "Pump spray" means a packaging system in which the product ingredients within the container are not under pressure and in which the product is expelled only while a pumping action is applied to a button, trigger or other actuator.

(125) "Responsible party" means the company, firm or establishment that is listed on the product's label. If the label lists two companies, firms or establishments, the responsible party is the party that the product was manufactured for or distributed by, as noted on the label.

(126) "Restricted materials" means pesticides established as restricted materials under Chapter 901:5-11 of the Administrative Code.

(127) "Retail outlet" means any establishment at which consumer products are sold, supplied, or offered for sale directly to consumers.

(128) "Retailer" means any person who sells, supplies, or offers consumer products for sale directly to consumers.

(129) "Roll-on product" means any antiperspirant or deodorant that dispenses active ingredients by rolling a wetted ball or wetted cylinder on the affected area.

(130) "Rubber and vinyl protectant" means any product designed to protect, preserve or renew vinyl, rubber, and plastic on vehicles, tires, luggage, furniture, and household products such as vinyl covers, clothing, and accessories. Rubber and vinyl protectant does not include products primarily designed to clean the wheel rim, such as aluminum or magnesium wheel cleaners, and tire cleaners that do not leave an appearance-enhancing or protective substance on the tire.

(131) "Rubbing alcohol" means any product containing isopropyl alcohol (also called isopropanol) or denatured ethanol and labeled for topical use, usually to decrease germs in minor cuts and scrapes, to relieve minor muscle aches, as a rubefacient, and for massage.

(132) "Sealant and caulking compound" means any product with adhesive properties that is designed to fill, seal, waterproof, or weatherproof gaps or joints between two surfaces. Sealant and caulking compound does not include: roof cements and roof sealants; insulating foams; removable caulking compounds; clear/paintable/water resistant caulking compounds; floor seam sealers; products designed exclusively for automotive uses; or sealers that are applied as continuous coatings. Sealant and caulking compound also does not include units of product, less packaging, which weigh more than one pound and consist of more than sixteen fluid ounces. For the purpose of this definition only, removable caulking compounds means a compound which temporarily seals windows or doors for three to six month time intervals, and clear/paintable/ water resistant caulking compounds means a compound which contains no appreciable level of opaque fillers or pigments, transmits most or all visible light through the caulk when cured, is paintable, and is immediately resistant to precipitation upon application.

(133) "Semisolid" means a product that, at room temperature, will not pour, but will spread or deform easily, including but not limited to gels, pastes, and greases.

(134) "Shaving cream" means an aerosol product which dispenses a foam lather intended to be used with a blade or cartridge razor, or other wet-shaving system, in the removal of facial or other bodily hair. Shaving cream does not include shaving gel.

(135) "Shaving gel" means an aerosol product which dispenses a post-foaming semisolid designed to be used with a blade, cartridge razor, or other shaving system in the removal of facial or other bodily hair. Shaving gel does not include shaving cream.

(136) "Silicone-based multi-purpose lubricant" means any lubricant which is:

(a) Designed and labeled to provide lubricity primarily through the use of silicone compounds including, but not limited to, polydimethylsiloxane; and

(b) Designed and labeled for general purpose lubrication, or for use in a wide variety of applications. Silicone-based multi-purpose lubricant does not

include products designed and labeled exclusively to release manufactured products from molds.

(137) "Single phase aerosol air freshener" means an aerosol air freshener with the liquid contents in a single homogeneous phase and which does not require that the product container be shaken before use.

(138) "Solid" means a substance or mixture of substances which, either whole or subdivided (such as the particles comprising a powder), is not capable of visually detectable flow as determined under ASTM D4359-90(2000)el.

(139) "Special purpose spray adhesive" means an aerosol adhesive that meets any of the following definitions:

(a) "Mounting adhesive" means an aerosol adhesive designed to permanently mount photographs, artwork, and any other drawn or printed media to a backing (paper, board, cloth, etc.) without causing discoloration to the artwork.

(b) "Flexible vinyl adhesive" means an aerosol adhesive designed to bond flexible vinyl to substrates. Flexible vinyl means a nonrigid polyvinyl chlorideplastic with at least five per cent, by weight, of plasticizer content. A plasticizer is a material, such as a high boiling point organic solvent, that is incorporated into a vinyl to increase its flexibility, workability, or distensibility, and may be determined using ASTM E260-96(2006) including any subsequent amendments or from product formulation data.

(c) "Polystyrene foam adhesive" means an aerosol adhesive designed to bond polystyrene foam to substrates.

(d) "Automobile headliner adhesive" means an aerosol adhesive designed to bond together layers in motor vehicle headliners.

(e) "Polyolefin adhesive" means an aerosol adhesive designed to bond polyolefins (e.g. polyethylene, polypropylene, etc.) to substrates.

(f) "Laminate repair/edgebanding adhesive" means an aerosol adhesive designed for:

(i) The touch-up or repair of items laminated with high pressure laminates (e.g. lifted edges, delaminations, etc.); or for

(ii) The touch-up, repair, or attachment of edgebanding materials, including, but not limited to, other laminates, synthetic marble, veneers, wood moulding, and decorative metals.

For the purpose of this definition, high pressure laminate means sheet materials which consist of paper, fabric, or other core material that have

been laminated at temperatures exceeding two hundred sixty-five degrees Fahrenheit, and at pressures between one thousand and one thousand four hundred pounds per square inch.

(g) "Automotive engine compartment adhesive" means an aerosol adhesive designed for use in motor vehicle under-the-hood applications which require oil and plasticizer resistance, as well as high shear strength, at temperatures of two hundred to two hundred seventy-five degrees Fahrenheit.

(140) "Spot remover" means any product labeled to clean localized areas, or remove localized spots or stains on cloth or fabric such as drapes, carpets, upholstery, and clothing, that does not require subsequent laundering to achieve stain removal. Spot remover does not include dry cleaning fluid, laundry pre-wash, or multi-purpose solvent.

(141) "Spray buff product" means a product designed to restore a worn floor finish in conjunction with a floor buffing machine and special pad.

(142) "Stick product" means any antiperspirant or deodorant that contains active ingredients in a solid matrix form, and that dispenses the active ingredients by frictional action on the affected area.

(143) "Structural waterproof adhesive" means an adhesive whose bond lines are resistant to conditions of continuous immersion in fresh or salt water, and that conforms with federal specification MMM-A-181D (Type 1, Grade A). This definition is as per the federal consumer products regulation contained in 40 CFR Part 59, Subpart C.

(144) "Table B compound" means any carbon-containing compound listed as an exception to the definition of VOC in paragraph (B)(155) of this rule.

(145) "Terrestrial" means to live on or grow from land.

(146) "Tire sealant and inflator" means any pressurized product that is designed to temporarily inflate and seal a leaking tire.

(147) "Toilet/urinal care product" means any product designed or labeled to clean and/or to deodorize toilet bowls, toilet tanks, or urinals. Toilet bowls, toilet tanks, or urinals includes, but is not limited to: toilets or urinals connected to permanent plumbing in buildings and other structures; portable toilets or urinals placed at temporary or remote locations; or toilet or urinals in vehicles such as buses, recreational motor homes, boats, ships, and aircraft. Toilet/urinal care product does not include bathroom and tile cleaner or general purpose cleaner.

(148) "Type A propellent" means a compressed gas such as carbon dioxide, nitrogen, nitrogen oxide, or compressed air which is used as a propellent, and is either

incorporated with the product or contained in a separate chamber within the product's packaging.

(149) "Type B propellent" means any halocarbon which is used as a propellent including chlorofluorocarbons, hydrochlorofluorocarbons, and hydrofluorocarbons.

(150) "Type C propellent" means any propellent which is not a type A or type B propellent, including propane, isobutane, n-butane, and dimethyl ether (also known as dimethyl oxide).

(151) "Undercoating" means any aerosol product designed to impart a protective, non-paint layer to the undercarriage, trunk interior, and/or firewall of motor vehicles to prevent the formation of rust or to deaden sound. Undercoating includes, but is not limited to, rubberized, mastic, or asphaltic products.

(152) "Usage directions" means the text or graphics on the product's principal display panel, label, or accompanying literature which describes to the end user how and in what quantity the product is to be used.

(153) "Vinyl/fabric/leather/polycarbonate coating" means a coating designed and labeled exclusively to coat vinyl, fabric, leather, or polycarbonate substrates.

(154) "Volatile organic compound" or "VOC" means a compound as defined in rule 3745-21-01 of the Administrative Code.

(155) "VOC content" means, except for charcoal lighter products, the total weight of VOC in a product expressed as a percentage of the product weight (exclusive of the container or packaging), as determined pursuant to rule 3745-112-08 of the Administrative Code.

(156) "Wasp and hornet insecticide" means any insecticide product that is designed for use against wasps, hornets, yellow jackets or bees by allowing the user to spray from a distance a directed stream or burst at the intended insects, or their hiding place.

(157) "Waterproofer" means a product designed and labeled exclusively to repel water from fabric or leather substrates. Waterproofer does not include fabric protectants.

(158) "Wax" means a material or synthetic thermoplastic substance generally of high molecular weight hydrocarbons or high molecular weight esters of fatty acids or alcohols, except glycerol and high polymers (plastics). Wax includes, but is not limited to: substances derived from the secretions of plants and animals such as carnuba wax and beeswax; substances of a mineral origin such as ozocerite and paraffin; or synthetic polymers such as polyethylene.

(159) "Web spray adhesive" means any aerosol adhesive which is not a mist spray adhesive or special purpose spray adhesive.

(160) "Wood cleaner" means a product labeled to clean wooden materials including but not limited to: decking; fences; flooring; logs; cabinetry; or furniture. Wood cleaner does not include: dusting aid; general purpose cleaner; furniture maintenance product; floor wax stripper; floor polish or wax; or products designed and labeled exclusively to preserve or color wood.

(161) "Wood floor wax" means wax-based products for use solely on wood floors.

(C) Referenced materials. This chapter includes references to certain matter or materials. The text of the referenced materials is not included in the rules contained in this chapter. Information on the availability of the referenced materials as well as the date of, and/or the particular edition or version of the material is included in this rule. For materials subject to change, only the specific versions specified in this rule are referenced. Material is referenced as it exists on the effective date of this rule. Except for subsequent annual publication of existing (unmodified) Code of Federal Regulation compilations, any amendment or revision to a referenced document is not applicable unless and until this rule has been amended to specify the new dates.

(1) Availability. The referenced materials are available as follows:

(a) American society for testing materials (ASTM). Information and copies of documents may be obtained by writing to: "ASTM International, 100 Bar Harbor Drive, P.O. Box C700, West Conshohocken, Pennsylvania 19426-2959." These documents are also available for purchase at www.astm.org. ASTM documents are also available for inspection and copying at most public libraries and "The State Library of Ohio."

(b) California air resources board (CARB) certification. Information and copies of executive orders, approval letters, equipment advisories, and equivalent test procedures may be obtained by writing to: "California Air Resources Board, Monitoring and Laboratory Division, P.O. Box 2815, Sacramento, CA, 95812-2815" or by calling (916) 327-0900. The full text of all CARB certification documents are also available in electronic format at http://www.arb.ca.gov/vapor/vapor.htm.

(c) California Code of Regulations. Copies of regulations may be obtained by writing to:" West Customer Service, P.O. Box 64833, St. Paul, MN 55164-0833" or by calling 1-800-888-3600. The full text of regulations are also available in electronic format at http://ccr.oal.ca.gov/.

(d) Chemical abstract service (CAS). Information can be obtained by writing to: "Chemical Abstract Service, 2540 Olentangy River Road, Columbus, Ohio, 43202," or by visiting their web site at www.cas.org.

(e) Code of Federal Regulations. Information and copies may be obtained by writing to: "Superintendent of Documents, Attention: New Orders, PO Box 371954, Pittsburgh, PA 15250-7954." The full text of the CFR is also available in electronic format at www.gpo.gov/fdsys/. The CFR compilations are also available for inspection and copying at most public libraries and "The State Library of Ohio."

(f) Federal Insecticide, Fungicide and Rodenticide Act. Information and copies may be obtained by writing to: "Superintendent of Documents, Attn: New Orders, PO Box 371954, Pittsburgh, PA 15250-7954." The full text of the Act is also available in electronic format at http://www.law.cornell.edu/uscode/. A copy of the Act is also available for inspection and copying at most public libraries and "The State Library of Ohio."

(g) Federal specification MMM-A-181D. Information and copies may be obtained by writing to: "DODSSP, Building 4/Section D, 700 Robbins Avenue, Philadelphia, PA 19111-5098." The full text of the federal specification is also available in electronic format at http://assist.daps.dla.mil/quicksearch/basic_profile.cfm?ident_number=53165. Federal specifications are also available for inspection and copying at most public libraries and "The State Library of Ohio."

(h) Ozone transport commission model rule for consumer products. Information and copies may be obtained by writing to: "Ozone Transport Commission, 444 N. Capitol Street., Suite 638, Washington, D.C., 20001" or by calling 1-202-508-3840. The full text of the model rule is also available electronically at http://www.otcair.org/interest.asp?Fview=stationary. OTC documents are also available for inspection and copying at most public libraries and "The State Library of Ohio."

(i) United States Code. Information and copies may be obtained by writing to: "Superintendent of Documents, Attn: New Orders, PO Box 371954, Pittsburgh, PA 15250-7954." The full text of the United States Code is also available in electronic format at http://www4.law.cornell.edu/uscode/. The USC compilations are also available for inspection and copying at most public libraries and "The State Library of Ohio."

(2) Referenced materials.

(a) 40 CFR Part 59, Subpart C; "National volatile organic compound emissions standards for consumer products;" 63 FR 48831, Sept. 11, 1998.

(b) Federal Fungicide, Insecticide and Rodenticide Act; contained in 7 USC 136 to 136y; "Environmental Pesticide Control"; published January 3, 2005 in Supplement IV of the 2000 Edition of the United States Code.

(c) ASTM D86-05; "Standard Test Method for Distillation of Petroleum Products at Atmospheric Pressure;" approved July 1, 2005.

(d) ASTM D4359-90(2000)e1; "Standard Test Method for Determining Whether a Material Is a Liquid or a Solid;" approved June 10, 2000.

(e) ASTM E260-96(2006); "Standard Practice for Packed Column Gas Chromatography;" approved March 1, 2006.

(f) CARB method 310; "Standard Test Method for Distillation of Petroleum Products at Atmospheric Pressure;" adopted September 25, 1997, amended May 5, 2005.

(g) Federal specification MMM-A-181D; "Adhesives, Phenols, Resorcinol, or Melamine Base;" effective January 23, 1980.

(h) Ozone Transport Commission; "Draft Model Rule for Consumer Products;" as issued September 13, 2006.

(i) Title 17, Division 3, Chapter 1, Subchapter 7, Section 93000; "Substances Identified as Toxic Air Contaminants;" as contained in the California Code of Regulations; August 20, 1999.

(j) Title 17, Subchapter 8.5, Article 1, Section 94503.5; "Innovative Products;" as contained in the California Code of Regulations; March 30, 1996.

(k) Title 17, Subchapter 8.5, Article 2, Section 94511; "Innovative Products;" as contained in the California Code of Regulations; November 18, 1997.

Effective: 12/06/2012

R.C. 119.032 review dates: 09/20/2012 and 12/06/2017

CERTIFIED ELECTRONICALLY
Certification

11/26/2012
Date

Promulgated Under: 119.03
Statutory Authority: 3704.03(E)
Rule Amplifies: 3704.03(A), 3704.03(E)
Prior Effective Dates: 9/15/07

3745-112-02 **Applicablity.**

Except as provided in rule 3745-112-04 of the Administrative Code, this chapter shall apply to any person who sells, supplies, offers for sale, or manufactures consumer products on or after January 1, 2009, for use in the state of Ohio.

Effective: 12/06/2012

R.C. 119.032 review dates: 09/20/2012 and 12/06/2017

CERTIFIED ELECTRONICALLY
Certification

11/26/2012
Date

Promulgated Under: 119.03
Statutory Authority: 3704.04(E)
Rule Amplifies: 3704.03(A), 3704.03(E)
Prior Effective Dates: 9/15/07

3745-112-03 **Standards.**

[Comment: For dates on non-regulatory government publications, publications of recognized organizations and associations, federal rules, and federal statutory provisions referenced in this rule, see paragraph (C) of rule 3745-112-01 of the Administrative Code titled "Referenced Materials."]

(A) Except as provided in rules 3745-112-04 and 3745-112-07 of the Administrative Code, no person shall sell, supply, offer for sale, or manufacture for sale in the state of Ohio any consumer product manufactured on or after January 1, 2009 that contains VOCs in excess of the VOC content limits specified in the following table of standards:

-Table 1: Table of standards-

Product Category	VOC Standard (per cent VOC, by weight)
Adhesives:	
Aerosol Mist Spray	65
Aerosol Web Spray	55
Special Purpose Spray Adhesives:	
Mounting, Automotive Engine Compartment, and	
Flexible Vinyl	70
Polystyrene Foam and Automotive Headliner	65
Polylolefin and Laminate Repair/Edge-Banding	60
Construction, Panel, and Floor	15
Contact	80
Contact General Purpose	55
Contact Special Purpose	80
General Purpose	10
Structural Waterproof	15
Adhesive Removers:	
Floor or Wall Covering Adhesive Remover	5
Gasket or Thread Locking Adhesive Remover	50
General Purpose Adhesive Remover	20
Specialty Adhesive Remover	70
Air Fresheners:	
Single-Phase Aerosol	30
Double-Phase Aerosol	25
Liquids/Pump Spray	18
Solids/Semisolids	3
Antiperspirants:	
Aerosol	40 HVOC 10 MVOC
Non-Aerosol	0 HVOC

	0 MVOC
Anti-Static Product: Non-Aerosol	11
Automotive Brake Cleaners	45
Automotive Rubbing or Polishing Compound	17
Automotive Wax, Polish, Sealant or Glaze:	
Hard Paste Waxes	45
Instant Detailers	3
All Other Forms	15
Automotive Windshield Washer Fluids	35
Bathroom and Tile Cleaners:	
Aerosol	7
All Other Forms	5
Bug and Tar Remover	40
Carburetor or Fuel-Injection Air Intake Cleaners	45
Carpet and Upholstery Cleaners:	
Aerosol	7
Non-Aerosol (Dilutables)	0.1
Non-Aerosol (Ready-to-Use)	3.0
Charcoal Lighter Material[1]	
Cooking Spray Aerosols	18
Deodorants:	
Aerosol	0 HVOC 10 MVOC
Non-Aerosol	0 HVOC 0 MVOC
Dusting Aids:	
Aerosol	25
All Other Forms	7
Electrical Cleaner	45
Electronic Cleaner	75
Engine Degreasers:	
Aerosol	35
Non-Aerosol	5
Fabric Protectants	60
Fabric Refresher:	
Aerosol	15
Non-Aerosol	6
Floor Polishes/Waxes:	
Products for Flexible Flooring Materials	7
Products for Non-Resilient Flooring	10
Wood Floor Wax	90
Floor Wax Strippers, Non-Aerosol[2]	
Footwear or Leather Care Products:	
Aerosol	75

Solid	55
Other Forms	15
Furniture Maintenance Products:	
Aerosol	17
All Other Forms Except Solid or Paste	7
General Purpose Cleaners:	
Aerosol	10
Non-Aerosol	4
General Purpose Degreasers:	
Aerosol	50
Non-Aerosol	4
Glass Cleaners:	
Aerosol	12
Non-Aerosol	4
Graffiti Remover:	
Aerosol	50
Non-Aerosol	30
Hair Mousses	6
Hair Shines	55
Hair Sprays	55
Hair Styling Gels	6
Hair Styling Product:	
Aerosols and Pump Sprays	6
All Other Forms	2
Heavy-Duty Hand Cleaner Soap	8
Insecticides:	
Crawling Bug (Aerosol)	15
Crawling Bug (All Other Forms)	20
Flea and Tick	25
Flying Bug (Aerosol)	25
Flying Bug (All Other Forms)	35
Foggers	45
Lawn and Garden (Non-Aerosol)	3
Lawn and Garden (All Other Forms)	20
Wasp and Hornet	40
Laundry Pre-Wash:	
Aerosols/Solids	22
All Other Forms	5
Laundry Starch Products	5
Metal Polishes/Cleaners	30
Multi Polishes Lubricant (Excluding Solid or Semi-Solid Products)	50
Nail Polish Remover	75
Non-Selective Terrestrial Herbicide, Non-Aerosol	3

Oven Cleaners:	
Aerosols/Pump Sprays	8
Liquids	5
Paint Remover or Strippers	50
Penetrants	50
Rubber and Vinyl Protectants:	
Non-Aerosol	3
Aerosol	10
Sealants and Caulking Compounds	4
Shaving Creams	5
Shaving Gel	7
Silicone-Based Multi-Purpose Lubricants (Excluding Solid or Semi-Solid Products)	60
Spot Removers:	
Aerosol	25
Non-Aerosol	8
Tire Sealants and Inflators	20
Under-coatings (Aerosols)	40
Wood Cleaner:	
Aerosol	17
Non-Aerosol	4

[1]See paragraph (F) of this rule regarding charcoal lighter material standards.

[2]See paragraph (H) of this rule regarding floor wax strippers.

(B) No person shall sell, supply, offer for sale, or manufacture for sale in the state of Ohio any antiperspirant or deodorant which contains any compound that has been identified by the CARB in the "California Code of Regulations", Title 17,, division 3, chapter 1, subchapter 7, section 93000 as a toxic air contaminant.

(C) Products that are diluted prior to use.

(1) For consumer products for which the label, packaging, or accompanying literature specifically states that the product should be diluted with water or non-VOC solvent prior to use, the VOC content limits specified in the table of this rule shall apply to the product only after the minimum recommended dilution has taken place. For purposes of this rule, minimum recommended dilution shall not include recommendations for incidental use of a concentrated product to deal with limited special applications such as hard-to-remove soils or stains.

(2) For consumer products for which the label, packaging, or accompanying literature states that the product should be diluted with any VOC solvent prior to use, the VOC content limits specified in the table of this rule shall apply to the product only after the maximum recommended dilution has taken place.

(D) Sell-through of products.

Notwithstanding the provisions of paragraph (A) of this rule, a consumer product manufactured prior to January 1, 2009 may be sold, supplied, or offered for sale after January 1, 2009. This does not apply to any consumer product that does not display on the product container or package the date on which the product was manufactured, or a code indicating such date, in accordance with paragraph (A) of rule 3745-112-05 of the Administrative Code.

(E) Products registered under the Federal Insecticide, Fungicide, and Rodenticide Act.

For those consumer products that are registered under the Federal Insecticide, Fungicide, and Rodenticide Act, the effective date of the VOC standards specified in the table of this rule is January 1, 2010.

(F) Requirements for charcoal lighter materials.

No person shall sell, supply, or offer for sale after January 1, 2009 any charcoal lighter material product unless at the time of the transaction the manufacturer can demonstrate that the product has been issued a currently effective certification by the CARB. This certification remains in effect in the state of Ohio as long as the CARB certification remains in effect and the certification is approved by the director. Any manufacturer claiming such a certification on this basis must submit to the director a copy of the certification decision (i.e., the executive order), including all conditions established by CARB applicable to the certification.

(G) Requirements for aerosol adhesives.

(1) The standards for aerosol adhesives apply to all uses of aerosol adhesives, including consumer, industrial, and commercial uses. Except as otherwise provided in rules 3745-112-04 and 3745-112-07 of the Administrative Code, no person shall sell, supply, offer for sale, use or manufacture for sale in the state of Ohio any aerosol adhesive which, at the time of sale, use, or manufacture, contains VOCs in excess of the limit specified in the table of this rule.

(2) In order to qualify as a special purpose spray adhesive the product must meet one or more of the definitions specified in rule 3745-112-01 of the Administrative Code, but if the product label indicates that the product is suitable for use on any substrate or application not listed in this definition, then the product shall be classified as either a web spray adhesive or a mist spray adhesive. If a product meets more than one of the definitions specified in rule 3745-112-01 of the Administrative Code for a special purpose spray adhesive, and is not classified as a web spray adhesive or mist spray adhesive under this paragraph, then the VOC content limit for the product shall be the lowest applicable VOC content limit specified in the table of this rule.

(3) All aerosol adhesives must comply with the labeling requirements specified in rule 3745-112-05 of the Administrative Code.

(H) Requirements for floor wax strippers.

No person shall sell, supply, offer for sale, or manufacture for use in Ohio any floor wax stripper unless the following requirements are met:

(1) The label of each non-aerosol floor wax stripper must specify a dilution ratio for light or medium build-up of polish that results in an as-used VOC concentration of three per cent, by weight, or less.

(2) If a non-aerosol floor wax stripper is also intended to be used for removal of heavy build-up of polish, the label of that floor wax stripper must specify a dilution ratio for heavy build-up of polish that results in an as-used VOC concentration of twelve per cent, by weight, or less.

(3) The terms light build-up, medium build-up or heavy build-up are not specifically required, as long as comparable terminology is used.

Effective: 12/06/2012

R.C. 119.032 review dates: 09/20/2012 and 12/06/2017

CERTIFIED ELECTRONICALLY
Certification

11/26/2012
Date

Promulgated Under: 119.03
Statutory Authority: 3704.03(E)
Rule Amplifies: 3704.03(A), 3704.03(E)
Prior Effective Dates: 9/15/07

3745-112-04 **Exemptions.**

[Comment: For dates on non-regulatory government publications, publications of recognized organizations and associations, federal rules, and federal statutory provisions referenced in this rule, see paragraph (C) of rule 3745-112-01 of the Administrative Code titled "Referenced Materials."]

(A) This rule shall not apply to any consumer product manufactured in the state of Ohio solely for shipment and use outside of the state of Ohio.

(B) The provisions of this rule shall not apply to a manufacturer or distributor who sells, supplies, or offers for sale in the state of Ohio a consumer product that does not comply with the VOC standards specified in paragraph (A) of rule 3745-112-03 of the Administrative Code, as long as the manufacturer or distributor can demonstrate both that the consumer product is intended for shipment and use outside of the state of Ohio, and that the manufacturer or distributor has taken reasonable prudent precautions to assure that the consumer product is not distributed or used in the state of Ohio. The requirement of this paragraph does not apply to consumer products that are sold, supplied, or offered for sale by any person to retail outlets in the state of Ohio.

(C) The MVOC content standards specified in paragraph (A) of rule 3745-112-03 of the Administrative Code for antiperspirants or deodorants, shall not apply to ethanol.

(D) The VOC limits specified in paragraph (A) of rule 3745-112-03 of the Administrative Code shall not apply to fragrances up to a combined level of two per cent, by weight, contained in any consumer product and shall not apply to colorants up to a combined level of two per cent, by weight, contained in any antiperspirant or deodorant.

(E) The VOC limits specified in paragraph (A) of rule 3745-112-03 of the Administrative Code shall not apply to any LVP-VOC.

(F) The requirements in paragraph (A) of rule 3745-112-03 of the Administrative Code for antiperspirants or deodorants shall not apply to those VOCs that contain more than ten carbon atoms per molecule and for which the vapor pressure is unknown, or that have a vapor pressure of two millimeters of mercury or less at twenty degrees Celsius.

(G) The requirements specified in paragraph (A) of rule 3745-112-05 of the Administrative Code shall not apply to consumer products registered under the Federal Insecticide, Fungicide, and Rodenticide Act.

(H) The VOC limits specified in paragraph (A) of rule 3745-112-03 of the Administrative Code shall not apply to air fresheners that are comprised entirely of fragrance, less

compounds not defined as VOCs in rule 3745-112-01 of the Administrative Code or exempted pursuant to paragraph (D) of this rule.

(I) The VOC limits specified in paragraph (A) of rule 3745-112-03 of the Administrative Code shall not apply to insecticides containing at least ninety-eight per cent para-dichlorobenzene, by weight.

(J) The VOC limits specified in paragraph (A) of rule 3745-112-03 of the Administrative Code shall not apply to adhesives sold in containers of one fluid ounce or less.

(K) The VOC limits specified in paragraph (A) of rule 3745-112-03 of the Administrative Code shall not apply to bait station insecticides. For the purpose of this paragraph, bait station insecticides are containers enclosing an insecticidal bait that is not more than 0.5 ounce, by weight, where the bait is designed to be ingested by insects and is composed of solid material feeding stimulants with less than five per cent active ingredients.

(L) A chemically formulated consumer product is exempt from the requirements of paragraph (A) of rule 3745-112-03 of the Administrative Code if:

(1) CARB, pursuant to its consumer products regulations (including all amendments and supplements) at Title 17, Subchapter 8.5, Article 1, Section 94503.5 or Article 2, Section 94511 of the California Code of Regulations, or the air pollution control agency of another state that has adopted a consumer product rule based on or substantially equivalent to the OTC "Model Rule for Consumer Products" has granted to the product's manufacturer an innovative products exemption or ACP for the product; and

(2) The innovative products exemption or ACP is valid for use in Ohio pursuant to paragraph (M) of this rule.

(M) An innovative products exemption or ACP as outlined in paragraph (L) of this rule shall not be valid for use in Ohio unless all the following requirements are met:

(1) The director determines that the exemption is still in effect and, after consideration of information provided pursuant to paragraphs (M)(2) to (M)(4) of this rule, the director determines that the exemption is acceptable.

(2) The product (including its form) for which the innovative products exemption or ACP is being used to comply with paragraph (M) of this rule meets the following:

(a) The product belongs to a chemically formulated consumer product category that is subject to a VOC content limit set in paragraph (A) of rule 3745-112-03 of the Administrative Code.

(b) The VOC content limit promulgated for this product by the agency that issued the innovative products exemption or ACP is equal to or more stringent than the most stringent applicable VOC content limit contained in paragraph (A) of rule 3745-112-03 of the Administrative Code.

(c) All ACP products used for emission credits within the approved ACP agreement are contained in paragraph (A) of rule 3745-112-03 of the Administrative Code.

(3) For an innovative product exemption, the manufacturer demonstrates to the director by clear and convincing evidence that, due to some characteristic of the product formulation, design, delivery systems, or other factor, the use of the product will result in less VOC emissions as compared to either the VOC emissions from a representative chemically formulated consumer product that complies with the VOC content limits specified in paragraph (A) of rule 3745-112-03 of the Administrative Code, or as compared to the calculated VOC emissions from a non-complying representative product, if the product had been reformulated to comply with the VOC limits specified in paragraph (A) of rule 3745-112-03 of the Administrative Code.

(4) Prior to relying on an innovative products exemption or ACP for compliance, the manufacturer has submitted to the director, in accordance with paragraph (N) of this rule, the following:

(a) A statement that, for a specified chemically formulated consumer product that it manufactures, it intends to comply with this section under an innovative products exemption or ACP rather than meet the applicable VOC content standards in paragraph (A) of rule 3745-112-03 of the Administrative Code.

(b) The brand name of the consumer product, and the specific chemically formulated consumer product category in paragraph (A) of rule 3745-112-03 of the Administrative Code to which the product belongs, including its form(s) (if applicable).

(c) A copy of the document(s) setting forth the innovative products exemption or ACP; the issuing agency's approval; the issuing agency's conditions of its approval; the demonstration of paragraph (M)(3) of this rule if an innovative products exemption; and any documents from the issuing agency that subsequently modify or terminate its conditions of approval; documentation demonstrating compliance with the innovative products exemption or ACP.

(d) A statement that the innovative products exemption or ACP, as well as the product for which the innovative products exemption or ACP is being used,

conforms with the requirements of paragraphs (M)(1) to (M)(3) of this rule, as applicable.

(N) Any submittal made pursuant to paragraph (M)(4) of this rule shall be sent to the director and the envelope or package shall be labeled as follows:

(1) For an innovative products exemption, "Attention: Consumer Product Innovative Product Exemption".

(2) For an ACP, "Attention: Consumer Product Alternative Control Plan."

Submittals of the above-mentioned documents may be sent to the following address:

"State Emergency Response Commission c/o Ohio Environmental Protection Agency P.O. Box 1049 Columbus, Ohio 43216-0149."

[Comment: Any packages and/or certified mail not acceptable for post office box delivery should be sent to street address "50 West Town Street, Suite 700, Columbus, Ohio 43215."]

Effective: 12/06/2012

R.C. 119.032 review dates: 09/20/2012 and 12/06/2017

CERTIFIED ELECTRONICALLY
Certification

11/26/2012
Date

Promulgated Under: 119.03
Statutory Authority: 3704.03(E)
Rule Amplifies: 3704.03(A), 3704.03(E)
Prior Effective Dates: 9/15/07

3745-112-05 **Administrative requirements.**

[Comment: For dates on non-regulatory government publications, publications of recognized organizations and associations, federal rules, and federal statutory provisions referenced in this rule, see paragraph (C) of rule 3745-112-01 of the Administrative Code titled "Referenced Materials."]

(A) Product dating.

(1) Each manufacturer of a consumer product subject to rule 3745-112-03 of the Administrative Code shall clearly display on each consumer product container or package, the day, month, and year on which the product was manufactured, or a code indicating such date.

(2) A manufacturer who uses the following code to indicate the date of manufacture shall not be subject to the requirements of paragraph (B) of this rule, if the code is represented separately from other codes on the product container so that it is easily recognizable:

YY DDD = year year day day day;

Where:

YY = two digits representing the year in which the product was manufactured; and

DDD = three digits representing the day of the year on which the product was manufactured, with 001 representing the first day of the year, 002 representing the second day of the year, and so forth (i.e. the Julian date).

(3) This date or code shall be displayed on each consumer product container or package no later than January 1, 2009.

(4) The date or date-code information shall be located on the container or inside the cover/cap so that it is readily observable or obtainable (by simply removing the cap/cover) without irreversibly disassembling any part of the container or packaging. For the purpose of this paragraph, information may be displayed on the bottom of a container as long as it is clearly legible without removing any product packaging.

(5) The requirements of this provision shall not apply to products containing no VOCs, or containing VOCs at 0.10 per cent, by weight, or less.

(B) Additional product dating requirements.

(1) If a manufacturer uses a code indicating the date of manufacture, for any consumer product subject to the applicable standard specified in the table of rule 3745-112-03 of the Administrative Code an explanation of the date portion of the code must be filed with the Ohio environmental protection agency no later than January 1, 2009.

(2) If a manufacturer changes any code indicating the date of manufacture for any consumer product subject to paragraph (B)(1) of this rule, an explanation of the modified code must be submitted to the Ohio environmental protection agency before any products displaying the modified code are sold, supplied, or offered for sale in Ohio.

(3) No person shall erase, alter, deface, or otherwise remove or make illegible any date or code indicating the date of manufacture from any regulated product container without the express authorization of the manufacturer.

(4) Date code explanations for codes indicating the date of manufacture are public information and may not be claimed as confidential.

(C) Most restrictive limit.

(1) Products manufactured before January 1, 2009, and Federal Insecticide, Fungicide, and Rodenticide Act registered insecticides manufactured before January 1, 2010.

Notwithstanding the definition of product category, as defined in rule 3745-112-01 of the Administrative Code, if anywhere on the principal display panel of any consumer product manufactured before January 1, 2009, or any Federal Insecticide, Fungicide, and Rodenticide Act registered insecticide manufactured before January 1, 2010, any representation is made that the product may be used as, or is suitable for use as a consumer product for which a lower VOC content limit is specified in the table of rule 3745-112-03 of the Administrative Code, then the lowest VOC limit shall apply. This requirement does not apply to general purpose cleaners, antiperspirant/deodorant products and insecticide foggers.

(2) Products manufactured on or after January 1, 2009, and Federal Insecticide, Fungicide, and Rodenticide Act registered insecticides manufactured on or after January 1, 2010.

Notwithstanding the definition of product category, as defined in rule 3745-112-01 of the Administrative Code, if anywhere on the container or packaging of any consumer product manufactured before January 1, 2009, or any Federal Insecticide, Fungicide, and Rodenticide Act registered insecticide manufactured on or after January 1, 2010, or on any sticker or label affixed thereto, any representation is made that the product may be used as, or is suitable for use as a

consumer product for which a lower VOC content limit is specified in the table of rule 3745-112-03 of the Administrative Code, then the lowest VOC limit shall apply. This requirement does not apply to general purpose cleaners, antiperspirant/deodorant products and insecticide foggers.

(D) Additional labeling requirements for aerosol adhesives, adhesive removers, electronic cleaner, electrical cleaner, energized electrical cleaner, and contact adhesives.

(1) In addition to the requirements specified in paragraphs (A) and (C) of this rule and rule 3745-112-06 of the Administrative Code, both the manufacturer and responsible party for each aerosol adhesive, adhesive remover, electronic cleaner, electrical cleaner, energized electrical cleaner, and contact adhesive product subject to this chapter shall ensure that all products clearly display the following information on each product container that is manufactured on or after the effective date for the category specified in the table of rule 3745-112-03 of the Administrative Code:

(a) The product category as specified in paragraph (A) of rule 3745-112-03 of the Administrative Code or an abbreviation of the category shall be displayed;

(b) The applicable VOC standard for the product that is specified in the table of rule 3745-112-03 of the Administrative Code, except for energized electrical cleaner, expressed as a per cent, by weight, shall be displayed unless the product is included in an alternative control plan approved by the director, as provided in rule 3745-112-04 of the Administrative Code, and the product exceeds the applicable VOC content limit;

If the product is included in an alternative control plan approved by the director and the product exceeds the applicable VOC content limits specified in the table of rule 3745-112-03 of the Administrative Code, the product shall be labeled with the term ACP or ACP product;

(c) If the product is classified as a special purpose spray adhesive, the applicable substrate and/or application or an abbreviation of the substrate/application that qualifies the product as special purpose shall be displayed; and

(d) If the manufacturer or responsible party uses an abbreviation as allowed by paragraph (D) of this rule, an explanation of the abbreviation must be filed with the director before the abbreviation is used.

(2) The information required in paragraph (A)(1) of this rule shall be displayed on the product container such that it is readily observable without removing or disassembling any portion of the product container or packaging. For the purposes of this rule, information may be displayed on the bottom of a container as long as it is clearly legible without removing any product packaging.

(3) No person shall remove, alter, conceal, or deface the information required in paragraph (D)(1) of this rule prior to final sale of the product.

Effective: 12/06/2012

R.C. 119.032 review dates: 09/20/2012 and 12/06/2017

CERTIFIED ELECTRONICALLY
Certification

11/26/2012
Date

Promulgated Under: 119.03
Statutory Authority: 3704.03(E)
Rule Amplifies: 3704.03(A), 3704.03(E)
Prior Effective Dates: 9/15/07

3745-112-06 **Reporting requirements.**

(A) Upon ninety days written notice, the director may require any responsible party to report any information for any consumer product or products of that responsible party including, but not limited to, all or part of the information specified in paragraphs (A)(1) to (A)(12) of this rule. If the responsible party does not have, or does not provide, the information requested by the director, the director may require the reporting of this information by the person that has the information, including, but not limited to, any formulator, manufacturer, supplier, parent company, private labeler, distributor, or repackager.

(1) The name of the responsible party and the party's address, telephone number, and designated contact person;

(2) Any claim of confidentiality made pursuant to applicable Ohio confidentiality requirements;

(3) The product brand name for each consumer product subject to registration and upon request by the director, the product label;

(4) The product category to which the consumer product belongs;

(5) The applicable product form(s) listed separately;

(6) An identification of each product brand name and form as a household product, I & I product, or both;

(7) Separate Ohio sales in pounds per year, to the nearest pound, and the method used to calculate Ohio sales for each product form;

(8) For information submitted by multiple companies, an identification of each company which is submitting relevant data separate from that submitted by the responsible party. All information from all companies shall be submitted within the timeframe specified in paragraph (A) of this rule;

(9) For each product brand name and form, the net per cent, by weight, of the total product, less container and packaging, comprised of the following, rounded to the nearest 0.1 per cent:

(a) Total table B compounds, as defined in rule 3745-112-01 of the Administrative Code;

(b) Total LVP-VOCs that are not fragrances;

(c) Total all other carbon-containing compounds that are not fragrances;

(d) Total all non-carbon-containing compounds;

(e) Total fragrance;

(f) For products containing greater than two per cent, by weight, fragrance:

(i) The per cent of fragrance that are LVP-VOCs; and

(ii) The per cent of fragrance that are all other carbon-containing compounds;

(g) Total paradichlorobenzene;

(10) For each product brand name and form, the identity, including the specific chemical name and associated "Chemical Abstract Services" number, of the following:

(a) Each table B compound, as defined in rule 3745-112-01 of the Administrative Code;

(b) Each LVP-VOC that is not a fragrance;

(11) If applicable, the weight per cent comprised of propellant for each product; and

(12) If applicable, an identification of the type of propellant (Type A, Type B, Type C, or a blend of the different types).

(B) Any person supplying information pursuant to this rule may request that the information be kept confidential as trade secret information and the Ohio environmental protection agency will evaluate that claim in accordance with Ohio law.

Effective: 09/15/2007

R.C. 119.032 review dates: 09/15/2012

CERTIFIED ELECTRONICALLY
Certification

09/05/2007
Date

Promulgated Under: 119.03
Statutory Authority: 3704.03(E)
Rule Amplifies: 3704.03(A), 3704.03(E)

3745-112-07 **Variances.**

(A) Any person who cannot comply with the requirements set forth in rule 3745-112-03 of the Administrative Code, because of extraordinary reasons beyond the person's reasonable control may apply in writing to the director for a variance. The variance application shall set forth:

(1) The specific grounds upon which the variance is sought;

(2) The proposed date by which compliance with the provisions of rule 3745-112-03 of the Administrative Code will be achieved; and

(3) A compliance report reasonably detailing the method(s) by which compliance will be achieved.

(B) No variance shall be granted unless all of the following findings are made:

(1) That, because of reasons beyond the reasonable control of the applicant, requiring compliance with rule 3745-112-03 of the Administrative Code would result in extraordinary economic hardship;

(2) That the public interest in mitigating the extraordinary hardship to the applicant by issuing the variance outweighs the public interest in avoiding any increased emissions of air contaminants which would result from issuing the variance; and

(3) That the compliance report proposed by the applicant can reasonably be implemented, and will achieve compliance as expeditiously as possible.

(C) Any variance order shall specify a final compliance date by which the requirements of rule 3745-112-03 of the Administrative Code will be achieved. Any variance order shall contain a condition that specifies increments of progress necessary to assure timely compliance, and such other conditions that the director finds necessary.

(D) Upon the application of any person, the director may review, and for good cause, modify or revoke a variance from requirements of rule 3745-112-03 of the Administrative Code.

Effective: 09/15/2007

R.C. 119.032 review dates: 09/15/2012

CERTIFIED ELECTRONICALLY
Certification

09/05/2007
Date

Promulgated Under: 119.03
Statutory Authority: 3704.03(E)
Rule Amplifies: 3704.03(A), 3704.03(E)

3745-112-08 **Test methods.**

[Comment: For dates on non-regulatory government publications, publications of recognized organizations and associations, federal rules, and federal statutory provisions referenced in this rule, see paragraph (C) of rule 3745-112-01 of the Administrative Code titled "Referenced Materials."]

(A) Upon the written request of the director, any manufacturer of a chemically formulated consumer product subject to the requirements of this rule shall test any of its products that are sold, offered for sale, held for sale, distributed, supplied, or manufactured for sale in the state of Ohio to determine the VOC content of the product (or in the case of charcoal lighter material, its emissions per start). Such testing shall be performed utilizing the test methods specified in paragraphs (B) to (G) of this rule, as applicable.

(B) Testing to determine compliance with the VOC content limitations specified in the table of rule 3745-112-03 of the Administrative Code, shall be performed using:

(1) CARB method 310; or

(2) An alternative method which is shown to accurately determine the concentration of VOCs in a product. Such methods must first be approved in writing by the director.

(C) Compliance with the VOC content limitations specified in the table of rule 3745-112-03 of the Administrative Code, may also be demonstrated through calculation of the VOC content of a consumer product from records of the amounts of constituents used to make the product (excluding packaging), pursuant to the following criteria:

(1) Compliance determinations based on these records may not be used unless the manufacturer of a chemically formulated consumer product keeps, for each day of production, accurate records of the amount and chemical composition of the individual product constituents. These records must be kept for at least five years;

(2) For the purposes of this section, the VOC content of a product shall be calculated according to the following equation:

VOC content = (B - C)/A x 100

where;

A = Total net weight of a unit of product (excluding any packaging);

B = Total weight of all VOCs in the constituents used to make the product, per unit;

C = Total weight of VOCs exempted under rule 3745-112-04 of the Administrative Code, per unit; and

(3) If the calculations for VOC content based on product records appear to demonstrate compliance with the VOC limits, but these calculations are contradicted by the results of product testing performed using CARB method 310, the results of CARB method 310 shall take precedence over the calculations based on product records and may be used to establish a violation of the requirements of the VOC content limits set forth in this rule.

(D) Testing to determine whether a product is a liquid or a solid shall be performed using ASTM D4359-90(2000)e1.

(E) Testing to determine distillation points of petroleum distillate-based charcoal lighter materials shall be performed using ASTM D86-05.

(F) Testing to determine whether a material is a plasticizer may be determined using ASTM E260-96(2006).

(G) The director may require any manufacturer that is required to perform testing pursuant to paragraph (A) of this rule to provide to the director product samples that are duplicates of the samples tested.

Effective: 12/06/2012

R.C. 119.032 review dates: 09/20/2012 and 12/06/2017

CERTIFIED ELECTRONICALLY
Certification

11/26/2012
Date

Promulgated Under: 119.03
Statutory Authority: 3704.04(E)
Rule Amplifies: 3704.03(A), 3704.03(E)
Prior Effective Dates: 9/15/07

Chapter 3745-113: Architectural and Industrial Maintenance (AIM) Coatings

Contact: Alan Harness 614-644-4838
alan.harness@epa.ohio.gov

3745-113-01 **Definitions for architectural and industrial maintenance (AIM) coatings.**

[Comment: For dates of non-regulatory government publications, publications of recognized organizations and associations, federal rules, and federal statutory provisions referenced in this rule, see paragraph (B) of this rule titled "Referenced materials."]

(A) Except as otherwise provided in this rule, the definitions in rule 3745-15-01 of the Administrative Code shall apply to this chapter.

(1) "Adhesive" means any chemical substance that is applied for the purpose of bonding two surfaces together other than by mechanical means.

(2) "Aerosol coating product" means a pressurized coating product containing pigments or resins that dispenses product ingredients by means of a propellant, and is packaged in a disposable can for hand-held application, or for use in specialized equipment for ground traffic/marking applications.

(3) "AIM" means architectural and industrial maintenance.

(4) "Antenna coating" means a coating labeled and formulated exclusively for application to equipment and associated structural appurtenances that are used to receive or transmit electromagnetic signals.

(5) "Anti-fouling coating" means a coating labeled and formulated for application to submerged stationary structures and their appurtenances to prevent or reduce the attachment of marine or freshwater biological organisms. To qualify as an antifouling coating, the coating must be registered with both USEPA under the Federal Insecticide, Fungicide and Rodenticide Act contained in 7 USC 136 to 136y and with Ohio EPA.

(6) "Appurtenance" means any accessory to a stationary structure coated at the site of installation, whether installed or detached, including but no limited to: bathroom and kitchen fixtures; cabinets; concrete forms; doors; elevators; fences; hand railings; heating equipment, air conditioning equipment, and other fixed mechanical equipment or stationary tools; lampposts; partitions pipes and piping systems; rain gutters and downspouts; stairways; fixed ladders; catwalks and fire escapes; and window screens.

(7) "Architectural coating" means a coating to be applied to stationary structures or their appurtenances at the site of installation, to portable buildings at the site of installation, to pavements, or to curbs. Coatings applied in shop applications or to non-stationary structures such as airplanes, ships, boats, railcars, and automobiles, as well as adhesives are not considered architectural coatings for the purposes of this rule.

(8) "Bitumens" means black or brown materials including, but not limited to, asphalt, tar, pitch, and asphaltite that are soluble in carbon disulfide, consist

mainly of hydrocarbons, and are obtained from natural deposits or as residues from the distillation of crude petroleum or coal.

(9) "Bituminous roof coating" means a coating which incorporates bitumens that is labeled and formulated exclusively for roofing for the primary purpose of preventing water penetration.

(10) "Bituminous roof primer" means a primer which incorporates bitumens that is labeled and formulated exclusively for roofing and intended for the purpose of preparing a weathered or aged surface or improving the adhesion of subsequent surfacing components.

(11) "Bond breaker" means a coating labeled and formulated for application between layers of concrete to prevent a freshly poured top layer of concrete from bonding to the layer over which it is poured.

(12) "Calcimine recoaters" means a flat solvent borne coating formulated and recommended specifically for recoating calcimine-painted ceilings and other calcimine-painted substrates.

(13) "Clear brushing lacquers" means clear wood finishes, excluding clear lacquer sanding sealers, formulated with nitrocellulose or synthetic resins to dry by solvent evaporation without chemical reaction and to provide a solid, protective film, which are intended exclusively for application by brush and which are labeled as specified in paragraph (A)(5) of rule 3745-113-04 of the Administrative Code.

(14) "Clear wood coatings" means clear and semi-transparent coatings, including lacquers and varnishes, applied to wood substrates to provide a transparent or translucent solid film.

(15) "Coating" means a material applied onto or impregnated into a substrate for protective, decorative, or functional purposes. Such materials include, but are not limited to, paints, varnishes, sealers, and stains.

(16) "Colorant" means a concentrated pigment dispersion in water, solvent, and/or binder that is added to an architectural coating after packaging in sale units to produce the desired color.

(17) "Concrete curing compound" means a coating labeled and formulated for application to freshly poured concrete to perform one or more of the following functions:

(a) Retard the evaporation of water.

(b) Harden or dustproof the surface of freshly poured concrete.

(18) "Concrete surface retarder" means a mixture of retarding ingredients such as extender pigments, primary pigments, resin, and solvent that interact chemically with the cement to prevent hardening on the surface where the

retarder is applied, allowing the retarded mix of cement and sand at the surface to be washed away to create an exposed aggregate finish.

(19) "Conjugated oil varnish" means a clear or semi-transparent wood coating, labeled as such, excluding lacquers or shellacs, based on a natural occurring conjugated vegetable oil (Tung oil) and modified with other natural or synthetic resins; a minimum of fifty per cent of the resin solids consisting of conjugated oil. Supplied as a single component product, conjugated oil varnishes penetrate and seal the wood. Film formation is due to polymerization of the oil. These varnishes may contain small amounts of pigment to control the final gloss or sheen.

(20) "Conversion varnish" means a clear acid-curing coating with an alkyd or other resin blended with amino resins and supplied as a single component or two-component product. Conversion varnishes produce a hard, durable, clear finish designed for professional application to wood flooring. Film formation is the result of an acid-catalyzed condensation reaction, affecting a transetherification at the reactive ethers of the amino resins.

(21) "Dry fog coating" means a coating labeled and formulated only for spray application such that overspray droplets dry before subsequent contact with incidental surfaces in the vicinity of the surface coating activity.

(22) "Exempt compound" means a compound identified as exempt under the definition of VOC. Exempt compounds content of a coating shall be determined by USEPA method 24, ASTM D3960-05 or SCAQMD method 303-91.

(23) "Faux finishing coating" means a coating labeled and formulated as a stain or a glaze to create artistic effects including, but not limited to, dirt, old age, smoke damage, and simulated marble and wood grain.

(24) "Fire-resistive coating" means an opaque coating labeled and formulated to protect the structural integrity by increasing the fire endurance of interior or exterior steel and other structural materials. The fire-resistive category includes sprayed fire resistive materials and intumescent fire resistive coatings that are used to bring structural materials, that has been fire tested and rated by a testing agency and approved by building code officials for use in bringing assemblies of structural materials into compliance with federal, state, and local building code requirements. The fire-resistive coating and the testing agency must be approved by building code officials. The fire-resistive coating shall be tested in accordance with ASTM E119-05a.

(25) "Fire-retardant coating" means a coating labeled and formulated to retard ignition and flame spread, that has been fire tested and rated by a testing agency approved by building code officials for use in bringing building and construction materials into compliance with federal, state, and local building code requirements. The fire-retardant coating and the testing agency must be approved by building code officials. The fire-retardant coating shall be tested in accordance with ASTM E84-05e1.

(26) “Flat coating” means a coating that is not defined under any other definition in this rule and that registers gloss less than fifteen on an eighty-five-degree meter or less than five on a sixty-degree meter according to ASTM D523-89 (1999).

(27) “Floor coating” means an opaque coating that is labeled and formulated for application to flooring, including, but not limited to, decks, porches, steps, and other horizontal surfaces, which may be subjected to foot traffic.

(28) “Flow coating” means a coating labeled and formulated exclusively for use by electric power companies or their subcontractors to maintain the protective coating systems present on utility transformer units.

(29) “Form-release compound” means a coating labeled and formulated for application to a concrete form to prevent the freshly poured concrete from bonding to the form. The form may consist of wood, metal, or some material other than concrete.

(30) “Graphic arts coating or sign paint” means a coating labeled and formulated for hand-application by artists using brush or roller techniques to indoor and outdoor signs (excluding structural components) and murals including letter enamels, poster colors, copy blockers, and bulletin enamels.

(31) “High-temperature coating” means a high performance coating labeled and formulated for application to substrates exposed continuously or intermittently to temperatures above two hundred and four degrees Celsius (four hundred degrees Fahrenheit).

(32) "Impacted immersion coating" means a high performance maintenance coating formulated and recommended for application to steel structures subject to immersion in turbulent, debris-laden water. These coatings are specifically resistant to high-energy impact damage by floating ice or debris.

(33) “Industrial maintenance coating” means a high performance architectural coating, including primers, sealers, undercoaters, intermediate coats, and topcoats, formulated for application to substrates, including floors, exposed to one or more of the following extreme environmental conditions listed in this paragraph and labeled as specified in paragraph (A)(4) of rule 3745-113-04 of the Administrative Code:

(a) Immersion in water, wastewater, or chemical solutions (aqueous and non-aqueous solutions), or chronic exposures of interior surfaces to moisture condensation.

(b) Acute or chronic exposure to corrosive, caustic, or acidic agents, or to chemicals, chemical fumes, or chemical mixtures or solutions.

(c) Repeated exposure to temperatures above one hundred twenty-one degrees Celsius (two hundred and fifty degrees Fahrenheit).

(d) Repeated (frequent) heavy abrasion, including mechanical wear and repeated (frequent) scrubbing with industrial solvents, cleansers, or scouring agents.

(e) Exterior exposure of metal structures and structural components.

(34) “Lacquer” means a clear or opaque wood coating, including clear lacquer sanding sealers, formulated with cellulosic or synthetic resins to dry by evaporation without chemical reaction and to provide a solid, protective film.

(35) “Low-solids coating” means a coating containing 0.12 kilogram or less of solids per liter (one pound or less of solids per gallon) of coating material as recommended for application by the manufacturer.

(36) “Magnesite cement coating” means a coating labeled and formulated for application to magnesite cement decking to protect the magnesite cement substrate from erosion by water.

(37) "Manufacturer's maximum recommendation" means the maximum recommendation for thinning that is indicated on the label or lid of the coating container.

(38) “Mastic texture coating” means a coating labeled and formulated to cover holes and minor cracks and to conceal surface irregularities, and is applied in a single coat of at least ten mils (0.010 inch) dry film thickness.

(39) “Metallic pigmented coating” means a coating containing at least forty-eight grams of elemental metallic pigment per liter of coating as applied (0.4 pounds per gallon), when tested in accordance with SCAQMD Method 318-95.

(40) “Multi-color coating” means a coating that is packaged in a single container and that is labeled and formulated to exhibit more than one color when applied in a single coat.

(41) “Non-flat coating” means a coating that is not defined under any other definition in this rule and that registers a gloss of fifteen or greater on an eighty-five-degree meter and five or greater on a sixty-degree meter according to ASTM D523-89 (1999).

(42) “Non-flat-high-gloss coating” means a non-flat coating that registers a gloss of seventy or greater on a sixty-degree meter according to ASTM D523-89 (1999).

(43) “Nonindustrial use”means any use of architectural coatings except in the construction or maintenance of any of the following:

(a) Facilities used in the manufacturing of goods and commodities.

(b) Transportation infrastructure, including highways, bridges, airports and railroads.

(c) Facilities used in mining activities, including petroleum extraction.

(d) Utilities infrastructure, including power generation and distribution, and water treatment and distribution systems.

(44) "Nuclear coating" means a protective coating formulated and recommended to seal porous surfaces such as steel (or concrete) that otherwise would be subject to intrusions by radioactive materials. These coatings must be resistant to long-term (service life) cumulative radiation exposure [ASTM method D4082-02], relatively easy to decontaminate, and resistant to various chemicals to which the coatings are likely to be exposed [ASTM method D3912-95].

(45) "Ohio EPA" means Ohio environmental protection agency.

(46) “Post-consumer coating” means a finished coating that would have been disposed of in a landfill, having completed its usefulness to a consumer, and does not include manufacturing wastes.

(47) “Pre-treatment wash primer” means a primer that contains a minimum of 0.5 per cent acid, by weight, when tested in accordance with ASTM D1613-03, that is labeled and formulated for application directly to bare metal surfaces to provide corrosion resistance and to promote adhesion of subsequent topcoats.

(48) “Primer” means a coating labeled and formulated for application to a substrate to provide a firm bind between the substrate and subsequent coats.

(49) “Quick-dry enamel” means a non-flat coating that is labeled as specified in paragraph (A)(8) of rule 3745-113-04 of the Administrative Code and that is formulated to have the following characteristics:

(a) Is capable of being applied directly from the container under normal conditions with ambient temperatures between sixteen and twenty-seven degrees Celsius (sixty and eighty-degrees Fahrenheit).

(b) When tested in accordance with ASTM D1640-03, sets to touch in two hours or less, is tack free in four hours or less, and dries hard in eight hours or less by the mechanical test method; and has a dried film gloss of seventy or above on a sixty-degree meter.

(50) “Quick-dry primer, sealer and undercoater” means a primer, sealer, or undercoater that is dry to the touch in thirty minutes and can be re-coated in two hours when tested in accordance with ASTM D1640-03.

(51) “Recycled coating” means an architectural coating formulated such that it contains a minimum of fifty per cent by volume post-consumer coating, with a maximum of fifty per cent by volume secondary industrial materials or virgin materials.

(52) “Residential” means areas where people reside or lodge, including, but not limited to, single and multiple family dwellings, condominiums, mobile homes, apartment complexes, motels, and hotels.

(53) “Roof coating” means a non-bituminous coating labeled and formulated for application to roofs for the primary purpose of preventing water penetration, reflecting ultraviolet light, or reflecting solar radiation. Metallic pigmented roof coatings, which qualify as metallic pigmented coatings, shall not be considered in this category, but shall be considered to be in the metallic pigmented coatings category.

(54) “Rust preventive coating” means a coating formulated exclusively for nonindustrial use to prevent the corrosion of metal surfaces and labeled as specified in paragraph (A)(6) of rule 3745-113-04 of the Administrative Code.

(55) “Sanding sealer” means a clear or semi-transparent wood coating labeled and formulated for application to bare wood to seal the wood and to provide a coat that can be abraded to create a smooth surface for subsequent applications of coatings. A sanding sealer that also meets the definition of a lacquer is not included in this category, but it is included in the lacquer category.

(56) "SCAQMD" means the south coast air quality management district in California.

(57) “Sealer” means a coating labeled and formulated for application to a substrate for one or more of the following purposes: to prevent subsequent coatings from being absorbed by the substrate, or to prevent harm to subsequent coatings by materials in the substrate.

(58) “Secondary coating (rework)” means a fragment of a finished coating or a finished coating from a manufacturing process that has converted resources into a commodity of real economic value, but does not include excess virgin resources of the manufacturing process.

(59) “Shellac” means a clear or opaque coating formulated solely with the resinous secretions of the lac beetle (Laciffer lacca), thinned with alcohol, and formulated to dry by evaporation without a chemical reaction.

(60) “Shop application” means an application of a coating to a product or a component of a product in or on the premises of a factory or a shop as part of a manufacturing, production, or repairing process (for example, original equipment manufacturing coatings).

(61) “Solicit” means to require for use or to specify, by written or oral contract.

(62) “Specialty primer, sealer, and undercoater” means a coating labeled as specified in paragraph (A)(7) of rule 3745-113-04 of the Administrative Code and that is formulated for application to a substrate to seal fire, smoke or water damage; to condition excessively chalky surfaces; to seal in

efflorescence; or to block stains. An excessively chalky surface is one that is defined as having a chalk rating of four or less as determined by ASTM D4214-98.

(63) “Stain” means a clear, semi-transparent, or opaque coating labeled and formulated to change the color of a surface, but not conceal the grain pattern or texture.

(64) “Swimming pool coating” means a coating labeled and formulated to coat the interior of swimming pools and to resist swimming pool chemicals.

(65) “Swimming pool repair and maintenance coating”means a rubber-based coating labeled and formulated to be used over existing rubber-based coatings for the repair and maintenance of swimming pools.

(66) “Temperature-indicator safety coating" means a coating labeled and formulated as a color-changing indicator coating for the purpose of monitoring the temperature and safety of the substrate, underlying piping, or underlying equipment, and for application to substrates exposed continuously or intermittently to temperatures above two hundred and four degrees Celsius (four hundred degrees Fahrenheit).

(67) "Thermoplastic rubber coating and mastics" means a coating or mastic formulated and recommended for application to roofing or other structural surfaces and that incorporates no less than forty per cent by weight of thermoplastic rubbers in the total resin solids and may also contain other ingredients including, but not limited to, fillers, pigments and modifying resins.

(68) “Tint base” means an architectural coating to which colorant is added after packaging in sale units to produce a desired color.

(69) “Traffic marking coating” means a coating labeled and formulated for marking and striping streets, highways, or other traffic surfaces including, but not limited to, curbs, berets, driveways, parking lots, sidewalks, and airport runways.

(70) “Undercoater" means a coating labeled and formulated to provide a smooth surface for subsequent coatings.

(71) "USEPA" means United States environmental protection agency.

(72) “Varnish" means a clear or semi-transparent wood coating, excluding lacquers and shellacs, formulated to dry by chemical reaction. Varnishes may contain small amounts of pigment to color a surface, or to control the final sheen or gloss of the finish.

(73) "VOC" or "volatile organic compound" means an organic compound which participates in atmospheric photochemical reactions; that is, an organic compound other than those which the administrator of the US EPA

designates in 40 CFR 51.100 (relating to definitions) as having negligible photochemical reactivity.

(74) “Waterproofing sealer” means a coating labeled and formulated for application to a porous substrate for the primary purpose of preventing the penetration of water.

(75) “Waterproofing concrete/masonry sealer” means a clear or pigmented film-forming coating that is labeled and formulated for sealing concrete and masonry to provide resistance against water, alkalis, acids, ultraviolet light, and staining.

(76) “Wood preservative" means a coating labeled and formulated to protect exposed wood from decay or insect attack, that is registered with both USEPA under the Federal Insecticide, Fungicide, and Rodenticide Act contained in 7 USC 136 to 136y and with Ohio EPA.

(B) Referenced materials. This chapter includes references to certain matter or materials. The text of the referenced materials is not included in the rules contained in this chapter. Material is referenced as it exists on the effective date of this rule. Except for subsequent annual publication of existing (unmodified) Code of Federal Regulation compilations, any amendment or revision to a referenced document is not applicable unless and until this rule has been amended to specify the new dates.

(1) Availability. The referenced materials are available as follows:

(a) "American Society for Testing Materials" (ASTM). Information and copies of documents may be obtained by writing to: "ASTM International, 100 Bar Harbor Drive, P.O. Box C700, West Conshohocken, Pennsylvania 19426-2959." These documents are also available for purchase at www.astm.org. ASTM documents are also available for inspection and use at most public libraries and "The State Library of Ohio."

(b) Code of Federal Regulations. Information and copies may be obtained by writing to: "Superintendent of Documents, Attention: New Orders, P.O. Box 371954, Pittsburgh, PA 15250-7954." The full text of the CFR is also available in electronic format at www.ecfr.gov. The CFR compilations are also available for inspection and use at most public libraries and "The State Library of Ohio."

(c) Federal Insecticide, Fungicide, and Rodenticide Act. Information and copies may be obtained by writing to: "Superintendent of Documents, Attn: New Orders, P.O. Box 371954, Pittsburgh, PA 15250-7954." The full text of the Act as amended in 1998 is also available in electronic format at www.epa.gov/oar/caa/title1.html. A copy of the Act is also available for inspection and use at most public libraries and "The State Library of Ohio."

(d) "South Coast Air Quality Management District (SCAQMD)". Information and copies of documents may be obtained by writing to: "South Coast AQMD, Public Records Coordinator/Public Records Unit, 21865 Copley Dr., Diamond Bar, CA, 91765." These documents are also available at http://www.aqmd.gov. SCAQMD documents are also available for inspection and use at most public libraries and "The State Library of Ohio."

(2) Referenced materials.

(a) 40 CFR 59, Subpart D, Appendix A; "Determination of Volatile Matter Content of Methacrylate Multicomponent Coatings Used as Traffic Marking Coatings;" 63 FR 48877, Sept. 11, 1998; 63 FR 55175, Oct. 14, 1998; 63 FR 32103, June 15, 1999; 64 FR 35002, June 30, 1999.

(b) ASTM D523-89; "Standard Test Method for Specular Gloss;" approved May 10, 1999.

(c) ASTM D1613-03; "Standard Test Method for Acidity in Volatile Solvents and Chemical Intermediates Used in Paint, Varnish, Lacquer, and Related Products;" approved October 1, 2003.

(d) ASTM D1640-03; "Standard Test Methods for Drying, Curing, or Film Formation of Organic Coatings at Room Temperature;" approved December 1, 2003.

(e) ASTM D3912-95; "Standard Test Method for Chemical Resistance of Coatings Used in Light-Water Nuclear Power Plants;" approved January 1, 2001.

(f) ASTM D3960-05; "Standard Practice for Determining Volatile Organic Compound (VOC) Content of Paints and Related Coatings;" approved July 1, 2005.

(g) ASTM D4082-02; "Standard Test Method for Effects of Gamma Radiation on Coatings for Use in Light-Water Nuclear Power Plants;" approved January 10, 2002.

(h) ASTM D4214-98; "Standard Test Methods for Evaluating the Degree of Chalking of Exterior Paint Films;" approved August 10, 1998.

(i) ASTM E119-05a; "Standard Test Methods for Fire Tests of Building Construction and Materials;" approved November 1, 2005.

(j) ASTM E84-05e1; "Standard Test Method for Surface Burning Characteristics of Building Materials;" approved February 1, 2005.

(k) Federal Insecticide, Fungicide, and Rodenticide Act; as contained in 7 USC 136 to 136y; "Environmental Pesticide Control;" published January 19, 2004 in Supplement III of the 2000 Edition of the United States Code.

(l) SCAQMD Method 303-91; "Determination of Exempt Compounds;" approved June 1, 1991, revised February, 1993.

(m) SCAQMD Method 304-91; "Determination of Volatile Organic Compounds (VOC) in Various Materials;" approved June 1, 1991, revised February, 1993, revised February, 1996.

(n) SCAQMD Method 318-95; "Determination of Weight Percent Elemental Metal in Coatings by X-Ray Diffraction;" approved July, 1996.

(o) USEPA Method 24; contained in 40 CFR Part 60, Appendix A; "Determination of volatile matter content, water content, density, volume solids, and weight solids of surface coatings;" as published in the July 1, 2012 Code of Federal Regulations.

Effective: 10/18/2013

R.C. 119.032 review dates: 08/01/2013 and 10/18/2018

CERTIFIED ELECTRONICALLY
Certification

10/08/2013
Date

Promulgated Under: 119.03
Statutory Authority: 3704.03(E)
Rule Amplifies: 3704.03(A), 3704.03(E)
Prior Effective Dates: 9/21/07

3745-113-02 **Applicability.**

The rules in this chapter are applicable to any person who supplies, sells, offers for sale, or manufacturers any AIM coating for use within the state of Ohio, as well as any person who applies or solicits the application of any AIM coating within the state of Ohio, except the following:

(A) Any AIM coating that is sold or manufactured for use outside of the state of Ohio or for shipment to other manufacturers for reformulation or repackaging.

(B) Any aerosol coating product.

(C) Any AIM coating that is sold in a container with a volume of one liter (1.057 quart) or less, including kits containing containers of different colors, types or categories of coatings and two component products. This applicability exception does not include bundling of containers individually containing one liter or less, which are sold together as a unit comprising more than one liter in volume, or any type of marketing which implies that multiple containers one liter or less be combined in one container. This exemption does not include packaging from which the coating cannot be applied. This exemption does include multiple containers of one liter or less that are packaged and shipped together with no intent or requirement to ultimately sell as one unit.

Replaces: 3745-113-02

Effective: 10/18/2013

R.C. 119.032 review dates: 10/18/2018

CERTIFIED ELECTRONICALLY
Certification

10/08/2013
Date

Promulgated Under: 119.03
Statutory Authority: 3704.03(E)
Rule Amplifies: 3704.03(A), 3704.03(E)
Prior Effective Dates: 9/21/07

3745-113-03 **Standards for architectural and industrial maintenance (AIM) coatings.**

(A) VOC content limits.

Except as provided in paragraphs (B) and (C) of this rule, on or after January 1, 2009, no person shall do any of the following:

(1) Manufacture, blend, or repackage for sale within the state of Ohio.

(2) Supply, sell or offer for sale within the state of Ohio.

(3) Solicit for application or apply within the state of Ohio, any AIM coating with a VOC content in excess of the corresponding limit specified in the table of this paragraph.

Limits are expressed in grams of VOC per liter of coating and pounds of VOC per gallon of coating thinned to the manufacturer's maximum recommendation, excluding the volume of any water, exempt compounds, or colorant added to tint bases.

Table: VOC Content Limits for AIM Coatings

Coating Type	Limit (grams/liter)	Limit (pounds/gallon)
Flat coatings	100	0.83
Non-flat coatings	150	1.25
Non-flat-high-gloss coatings	250	2.08
Specialty coatings:		
Antenna coatings	530	4.42
Anti-fouling coatings	400	3.33
Bituminous roof coatings	300	2.50
Bituminous roof primers	350	2.92
Bond breakers	350	2.92
Calcimine recoaters	475	3.96
Clear wood coatings:		
Clear brushing lacquers	680	5.67
Lacquers, including clear lacquer sanding sealers	550	4.59
Sanding sealers, excluding clear lacquers	350	2.92
Varnishes other than conversion varnishes	350	2.92

Table: VOC Content Limits for AIM Coatings

Conjugated oil varnish	450	3.75
Conversion varnishes	725	6.04
Concrete curing compounds	350	2.92
Concrete surface retarders	780	6.50
Dry fog coatings	400	3.33
Faux finishing coatings	350	2.92
Fire-resistive coatings	350	2.92
Fire-retardant coatings:		
Clear	650	5.42
Opaque	350	2.92
Floor coatings	250	2.08
Flow coatings	420	3.50
Form-release compounds	250	2.08
Graphic arts coatings (sign paints)	500	4.17
High-temperature coatings	420	3.50
Impacted immersion coatings	780	6.50
Industrial maintenance coatings	340	2.83
Low-solids coatings	120	1.00
Magnesite cement coatings	450	3.75
Mastic texture coatings	300	2.50
Metallic pigmented coatings	500	4.17
Multi-color coatings	250	2.08
Nuclear coatings	450	3.75
Pre-treatment wash primers	420	3.50
Primers, sealers, and undercoaters	200	1.67
Quick-dry enamels	250	2.08
Quick-dry primers, sealers and undercoaters	200	1.67
Recycled coatings	250	2.08
Roof coatings	250	2.08
Rust preventive coatings	400	3.33
Shellacs:		
Clear	730	6.09
Opaque	550	4.59

Table: VOC Content Limits for AIM Coatings

Specialty primers, sealers and undercoaters	350	2.92
Stains	250	2.08
Swimming pool coatings	340	2.83
Swimming pool repair & maintenance coatings	340	2.83
Temperature-indicator Safety coatings	550	4.59
Thermoplastic rubber coatings and mastics	550	4.59
Traffic marking coatings	150	1.25
Waterproofing sealers	250	2.08
Waterproofing concrete/masonry sealers	400	3.33
Wood preservatives	350	2.92

Conversion factor: one pound VOC per gallon (US) = 119.95 grams per liter.

(B) Most restrictive VOC limit.

If anywhere on the container of any AIM coating, or any label or sticker affixed to the container, or in any sales, advertising, or technical literature supplied by a manufacturer or anyone acting on their behalf, any representation is made that indicates that the coating meets the definition of or is recommended for use for more than one of the coating categories listed in the table of paragraph (A)(3) of this rule, then the most restrictive VOC content limit shall apply. This provision does not apply to the following coating categories:

(1) Lacquer coatings (including lacquer sanding sealers).

(2) Metallic pigmented coatings.

(3) Shellacs.

(4) Fire-retardant coatings.

(5) Pretreatment wash primers.

(6) Industrial maintenance coatings.

(7) Low-solids coatings.

(8) Wood preservatives.

(9) High-temperature coatings.

(10) Temperature-indicator safety coatings.

(11) Antenna coatings.

(12) Antifouling coatings.

(13) Flow coatings.

(14) Bituminous roof primers.

(15) Specialty primers, sealers, and undercoaters.

(16) Thermoplastic rubber coatings and mastics.

(17) Calcimine recoaters.

(18) Impacted immersion coatings.

(19) Nuclear coatings.

(C) Sell-through of coatings.

A coating manufactured prior to January 1, 2009, may be sold, supplied, or offered for sale until December 31, 2012. In addition, a coating manufactured before January 1, 2009 may be applied at any time, both before and after January 1, 2009, so long as the coating complied with the standards in effect at the time the coating was manufactured. This paragraph does not apply to any coating that does not display the date or date code required by paragraph (A) of rule 3745-113-04 of the Administrative Code.

(D) Painting practices.

All AIM coating containers used to apply the contents therein to a surface directly from the container by pouring, siphoning, brushing, rolling, padding, ragging, or other means, shall be closed when not in use. These AIM coatings containers include, but are not limited to, drums, buckets, cans, pails, trays, or other application containers. Containers of any VOC-containing materials used for thinning and cleanup shall also be closed when not in use.

(E) Thinning.

No person who applies or solicits the application of any AIM coating shall apply a coating that is thinned to exceed the applicable VOC limit specified in the table of paragraph (A)(3) of this rule.

(F) Rust preventive coatings.

No person shall apply or solicit the application of any rust preventive coating for industrial use, unless such a rust preventive coating complies with the industrial maintenance coating VOC limit specified in the table of paragraph (A)(3) of this rule. No person shall sell or offer for sale any rust preventative coating for application to any nonmetallic substrate, nor shall any person apply a rust preventative coating to any nonmetallic substrate.

(G) Coatings not listed in the table of paragraph (A)(3) of this rule.

For any coating that does not meet any of the definitions for the specialty coatings categories listed in the table of paragraph (A)(3) of this rule, the VOC content limit shall be determined by classifying the coating as a flat coating, non-flat coating, or non-flat-high-gloss coating as defined in paragraphs (A)(21), (A)(35) and (A)(36) of rule 3745-113-01 of the Administrative Code and the corresponding flat or non-flat coating limit shall apply.

Effective: 10/18/2013

R.C. 119.032 review dates: 08/01/2013 and 10/18/2018

CERTIFIED ELECTRONICALLY
Certification

10/08/2013
Date

Promulgated Under: 119.03
Statutory Authority: 3704.03(E)
Rule Amplifies: 3704.03(A), 3704.03(E)
Prior Effective Dates: 9/21/07

3745-113-04 **Container labeling requirements.**

(A) Effective January 1, 2009, each manufacturer of any AIM coatings subject to this rule shall display the following information on the coating container (or label) in which the coating is sold or distributed:

(1) Date code: The date the coating was manufactured, or a date code representing the date, shall be indicated on the label, lid, or bottom of the container. If the manufacturer uses a date code for any coating, the manufacturer shall file an explanation of each code with the director.

(2) Thinning recommendations: A statement of the manufacturer's recommendation regarding thinning of the coating shall be indicated on the label or lid of the container. This requirement does not apply to the thinning of architectural coatings with water. If thinning of the coating prior to use is not necessary, the recommendation shall specify that the coating is to be applied without thinning.

(3) VOC content: Each container of any coating subject to this rule shall display either the maximum or the actual VOC content of the coating, as supplied, including the maximum thinning as recommended by the manufacturer. VOC content shall be displayed in grams of VOC per liter of coating. VOC content displayed shall be calculated using product formulation data, or shall be determined using the test methods in paragraph (A)(2) of rule 3745-113-06 of the Administrative Code. The equations in paragraph (A)(1) of rule 3745-113-06 of the Administrative Code shall be used to calculate VOC content.

(4) Industrial maintenance coatings: The label or the lid of the container in which the coating is sold or distributed shall display one or more of the following descriptions:

(a) "For industrial use only."

(b) "For professional use only."

(c) "Not for residential use" or "Not intended for residential use."

(5) Clear brushing lacquers: The labels of all clear brushing lacquers shall prominently display the statements "For brush application only," and "This product must not be thinned or sprayed."

(6) Rust preventive coatings: The labels of all rust preventive coatings shall prominently display the statement "For metal substrates only."

(7) Specialty primers, sealers, and undercoaters: The labels of all specialty primers, sealers, and undercoaters shall prominently display one or more of the following:

(a) For blocking stains.

(b) For fire-damaged substrates.

(c) For smoke-damaged substrates.

(d) For water-damaged substrates.

(e) For excessively chalky substrates.

(f) To seal in efflorescence.

(8) Quick dry enamels: The labels of all quick dry enamels shall prominently display the words "Quick Dry" and the dry hard time.

(9) Non-flat -high-gloss coatings: The labels of all non-flat -high-gloss coatings shall prominently display the words "High Gloss."

(10) Faux finishing coatings: The labels of all clear topcoat faux finishing coatings shall prominently display the statement “This product can only be sold or used as part of a faux finishing coating system.”

Effective: 10/18/2013

R.C. 119.032 review dates: 08/01/2013 and 10/18/2018

CERTIFIED ELECTRONICALLY
Certification

10/08/2013
Date

Promulgated Under: 119.03
Statutory Authority: 3704.03(E)
Rule Amplifies: 3704.03(A), 3704.03(E)
Prior Effective Dates: 9/21/07

3745-113-05 **Reporting requirements.**

(A) Each manufacturer of a product subject to a VOC content limit in paragraph (A) of rule 3745-113-03 of the Administrative Code, shall keep records demonstrating compliance with the VOC content limits. Such records shall clearly list each product by name (and identifying number, if applicable) as shown on the product label and in applicable sales and technical literature, the VOC content as determined in rule 3745-113-06 of the Administrative Code, the name and chemical abstract service (CAS) number of the VOC constituents in the product, the dates of the VOC content determinations, and the coating category and the applicable VOC content limit. These records shall be kept for a period not less than five years and shall be made available to the director within ninety days of request.

(B) A responsible official from each manufacturer shall upon request of the director, provide data concerning the distribution and sales of coatings subject to a VOC content limit in paragraph (A) of rule 3745-113-03 of the Administrative Code. The responsible official shall within ninety days provide information including, but not limited to the following:

(1) The name and mailing address of the manufacturer.

(2) The name, address, and telephone number of a contact person.

(3) The name of the product as it appears on the label and the coating category in paragraph (A) of rule 3745-113-03 of the Administrative Code under which it is regulated.

(4) Whether it is marketed for interior or exterior use or both.

(5) The number of gallons sold in the state of Ohio in containers greater than one liter and less than one liter.

(6) The actual VOC content and VOC content limit in grams per liter. If thinning is recommended, list the actual VOC content and VOC content limit after recommended thinning. If containers less than one liter have a different VOC content than containers greater than one liter, list separately.

(7) The names and CAS number of the VOC constituents in the product.

Effective: 10/18/2013

R.C. 119.032 review dates: 08/01/2013 and 10/18/2018

CERTIFIED ELECTRONICALLY
Certification

10/08/2013
Date

Promulgated Under: 119.03
Statutory Authority: 3704.03(E)
Rule Amplifies: 3704.03(A), 3704.03(E)
Prior Effective Dates: 9/21/07

3745-113-06 **Compliance provisions and test methods.**

[Comment: For dates of non-regulatory government publications, publications of recognized organizations and associations, federal rules, and federal statutory provisions referenced in this rule, see paragraph (B) of rule 3745-113-01 of the Administrative Code titled "Referenced materials."]

(A) For the purpose of determining compliance with the VOC content limits in the table of paragraph (A)(3) of rule 3745-113-03 of the Administrative Code, the VOC content of a coating shall be determined by using the procedures described in paragraph (A)(1)(a) or (A)(1)(b) of this rule, as appropriate. The VOC content of a tint base shall be determined without colorant that is added after the tint base is manufactured.

(1) Calculation of VOC content.

(a) With the exception of low solids coatings, determine the VOC content in grams of VOC per liter of coating thinned to the manufacturer's maximum recommendation, excluding the volume of any water and exempt compounds. Determine the VOC content using the following equation:

VOC content = (Ws -Ww -Wec) / (Vm - Vw - Vec)

where:

VOC content = grams of VOC per liter of coating

Ws = weight of volatiles, in grams

Ww = weight of water, in grams

Wec = weight of exempt compounds, in grams

Vm = volume of coating, in liters

Vw = volume of water, in liters

Vec = volume of exempt compounds, in liters

(b) For low solids coatings, determine the VOC content in units of grams of VOC per liter of coating thinned to the manufacturer's maximum recommendation, including the volume of any water and exempt compounds. Determine the VOC content using the following equation:

VOC content (ls) = (Ws - Ww - Wec) / (Vm)

where:

VOC content (ls) = the VOC content of a low solids coating in grams per liter of coating

Ws = weight of volatiles, in grams

Ww = weight of water, in grams

Wec = weight of exempt compounds, in grams

Vm = volume of coating, in liters

(2) VOC content of coatings: To determine the physical properties of a coating in order to perform the calculations in paragraph (A)(1) of this rule, the reference method for VOC content is USEPA method 24, except as provided in paragraphs (A)(3) and (A)(4) of this rule. An alternative method to determine the VOC content of coatings is SCAQMD method 304-91. The exempt compounds content shall be determined by SCAQMD method 303-91 (Revised August 1996). To determine the VOC content of a coating, the manufacturer may use USEPA method 24, or an alternative method, as provided in paragraph (A)(3) of this rule, formulation data, or any other reasonable means for predicting that the coating has been formulated as intended (e.g., quality assurance checks, recordkeeping). However, if there are any inconsistencies between the results of a test conducted utilizing USEPA method 24 and any other means for determining VOC content, the results of the test utilizing USEPA method 24 will govern, except when an alternative method is approved as specified in paragraph (A)(3) of this rule. The director may require the manufacturer to conduct an analysis using USEPA method 24.

(3) Alternative test methods: Other test methods demonstrated to provide results that are acceptable for purposes of determining compliance with paragraph (A)(2) of this rule, after review and approval in writing by the director and the USEPA, may also be used.

(4) Methacrylate traffic coating markings: Analysis of methacrylate multi-component coatings used as traffic marking coatings shall be conducted according to a modification of USEPA method 24 contained in 40 CFR 59, Subpart D, Appendix A. This method has not been approved for methacrylate multicomponent coatings used for purposes other than as traffic marking coatings or for other classes of multicomponent coatings.

Effective: 10/18/2013

R.C. 119.032 review dates: 08/01/2013 and 10/18/2018

CERTIFIED ELECTRONICALLY
Certification

10/08/2013
Date

Promulgated Under: 119.03
Statutory Authority: 3704.03(E)
Rule Amplifies: 3704.03(A), 3704.03(E)
Prior Effective Dates: 9/21/07

Chapter 3745-114: Toxic Air Contaminants

Contact: Paul Koval 614-644-3615
Paul.Koval@epa.ohio.gov

3745-114-01 **Toxic air contaminants.**

(A) Except where exempt under division (F)(4) of section 3704.03 of the Revised Code, the director may require a permit-to-install, issued in accordance with Chapter 3745-31 of the Administrative Code, for any new or modified air contaminant sources that emit a toxic air contaminant that presents, or may present, through inhalation or other routes of exposure, a threat of adverse human health effects, including, but not limited to, substances that are known to be, or may reasonably be anticipated to be, carcinogenic, mutagenic, teratogenic, or neurotoxic, that cause reproductive dysfunction, or that are acutely or chronically toxic, or a threat of adverse environmental effects whether through ambient concentrations, bioaccumulation, deposition, or otherwise, and that is identified in this rule.

Toxic air contaminant	CAS Number
acetaldehyde	00075-07-0
acetamide	00060-35-5
acetonitrile	00075-05-8
acetophenone	00098-86-2
acetylaminofluorene, 2-	00053-96-3
acetylene tetrabromide	00079-27-6
acrolein	00107-02-8
acrylamide	00079-06-1
acrylic acid	00079-10-7
acrylonitrile	00107-13-1
aldrin	00309-00-2
allyl chloride	00107-05-1
allylamine	00107-11-9
aluminum & compounds, as Al; Metal dust; Pyro powders Soluble salts; Alkyls (NOS)	07429-90-5
aluminum oxide	01344-28-1
aminodiphenyl, 4-	00092-67-1
aminopyridine, 2-	00504-29-0
amitrole	00061-82-5
ammonia (anhydrous)	07664-41-7
ammonium perfluorooctanoate	03825-26-1
aniline	00062-53-3
anisidine, ortho-	00090-04-0
anisidine, para-	00104-94-9
antimony compounds, as Sb	07440-36-0
antimony hydride	07803-52-3
antimony trioxide	01309-64-4
arsenic compounds, as As	07440-38-2

arsine	07784-42-1
atrazine	01912-24-9
azinphos-methyl	00086-50-0
barium & compounds, as Ba	07440-39-3
benzene	00071-43-2
benzidine (& dyes metabolized to benzidine)	00092-87-5
benzotrichloride	00098-07-7
benzoyl chloride	00098-88-4
benzyl chloride	00100-44-7
beryllium compounds, as Be	07440-41-7
biphenyl, 1,1-	00092-52-4
bis(chloromethyl)ether (BCME)	00542-88-1
bromine	07726-95-6
bromine pentafluoride	07789-30-2
bromoform	00075-25-2
butadiene, 1,3-	00106-99-0
butyl acrylate, n-	00141-32-2
butyl mercaptan, n-	00109-79-5
butyl toluene, p-tert-	00098-51-1
cadmium compounds, as Cd	07440-43-9
calcium cyanamide	00156-62-7
captan	00133-06-2
carbaryl	00063-25-2
carbon disulfide	00075-15-0
carbon tetrabromide	00558-13-4
carbon tetrachloride	00056-23-5
carbonyl fluoride	00353-50-4
carbonyl sulfide	00463-58-1
catechol	00120-80-9
chloramben	00133-90-4
chlordane	00057-74-9
chlorine	07782-50-5
chlorine dioxide	10049-04-4
chlorine triflouride	07790-91-2
chloroacetic acid	00079-11-8
chloroacetophenone, 2-	00532-27-4
chlorobenzene	00108-90-7
chlorobenzilate	00510-15-6
chloroform	00067-66-3
chloromethyl methyl ether	00107-30-2
chloroprene, beta-	00126-99-8
chromium and inorganic compounds, as Cr;	07440-47-3

metal and Cr III compounds; water-soluble Cr VI compounds; insoluble Cr VI compounds	
cobalt (& cobalt compounds), as Co	07440-48-4
coke oven emissions	*
copper fume; dusts and mists, as Cu	07440-50-8
cresol meta-	00108-39-4
cresol ortha-	00095-48-7
cresol para-	00106-44-5
cresols / cresylic acid, all isomers	01319-77-3
cumene	00098-82-8
cyanides, free (IRIS) & compounds (HAP)	00057-12-5
cyanogen	00460-19-5
cyanogen chloride	00506-77-4
cyclohexane	00110-82-7
cyclonite	00121-82-4
D 2,4-, salts and esters	00094-75-7
DDE	03547-04-4
decaborane	17702-41-9
Di (2-ethylhexyl) phthalate (DEHP)	00117-81-7
diazomethane	00334-88-3
diborane	19287-45-7
dibromo-3-chloropropane, 1,2- (DBCP)	00096-12-8
dibutyl phenyl phosphate	02528-36-1
dibutyl phthalate	00084-74-2
dichloro-2-butene, 1,4-	00764-41-0
dichloroacetylene	07572-29-4
dichlorobenzene (para), 1,4-	00106-46-7
dichlorobenzene, 1,2- (o-dichlorobenzene)	00095-50-1
dichlorobenzidine, 3,3'-	00091-94-1
dichlorodiphenyl trichloroethane, p,p'- (DDT)	00050-29-3
dichloroethane, 1,1-	00075-34-3
dichloroethyl ether	00111-44-4
dichloromethane (methylene chloride)	00075-09-2
dichloropropene, 1,3- (technical grade)	00542-75-6
dichlorvos (DDVP)	00062-73-7
dieldrin	00060-57-1
diethanolamine	00111-42-2
diethyl aniline n,n-	00091-66-7
diethyl sulfate	00064-67-5
diethylene triamine	00111-40-0
dimethoxybenzidine, 3,3- (dianisidine, ortho-	00119-90-4

)	
dimethyl aminoazobenzene, 4- (or para-)	00060-11-7
dimethyl benzidine, 3,3'-	00119-93-7
dimethyl carbamoyl chloride	00079-44-7
dimethyl sulfate	00077-78-1
dimethylaniline (N,N-dimethylaniline)	00121-69-7
dimethylformamide, n,n-	00068-12-2
dimethylhydrazine, 1,1-	00057-14-7
dimethylphthalate	00131-11-3
dinitrobenzene	25154-54-5
dinitrobenzene, 1,4-p	00100-25-4
dinitrobenzene, 1,3-m	00099-65-0
dinitrobenzene, 1,2-o	00528-29-0
dinitro-o-cresol, 4,6-, & salts	00534-52-1
dinitrophenol, 2,4-	00051-28-5
dinitrotoluene, 2,4-	00121-14-2
dioxane 1,4- (1,4-diethyleneoxide)	00123-91-1
dioxathion	00078-34-2
dioxolane, 1,3-	00646-06-0
diphenylamine	00122-39-4
diphenylhydrazine, 1,2-	00122-66-7
epichlorohydrin	00106-89-8
ethyl acrylate	00140-88-5
ethyl benzene	00100-41-4
ethyl carbamate (urethane)	00051-79-6
ethyl chloride (chloroethane)	00075-00-3
ethyl mercaptan	00075-08-1
ethylene chlorohydrin	00107-07-3
ethylene dibromide	00106-93-4
ethylene dichloride (dichloroethane, 1,2-)	00107-06-2
ethylene glycol	00107-21-1
ethylene imine (aziridine)	00151-56-4
ethylene oxide	00075-21-8
ethylene thiourea	00096-45-7
ethylidene dichloride (1,1-dichloroethane)	00075-34-3
fluorine	07782-41-4
formaldehyde (gas)	00050-00-0
formic acid	00064-18-6
glycol ethers	*
glyoxal	00107-22-2
heptachlor	00076-44-8
heptachlor epoxide	01024-57-3

hexachlorobenzene (HCB)	00118-74-1
hexachlorobutadiene	00087-86-3
hexachlorocyclopentadiene	00077-47-4
hexachloroethane	00067-72-1
hexachloronaphthalene	01335-87-1
hexafluoroacetone	00684-16-2
hexamethyl phosphoramide	00680-31-9
hexamethylene diisocyanate	00822-06-0
hexane, n-	00110-54-3
hexylene glycol	00107-41-5
hydrazine	00302-01-2
hydrogen chloride	07647-01-0
hydrogen cyanide salts, as CN	00592-01-8
hydrogen cyanide, as CN (hydrocyanic acid)	00074-90-8
hydrogen fluoride, as F	07664-39-3
hydrogen selenide	07783-07-5
hydrogen sulfide	07783-06-4
hydroquinone	00123-31-9
hydroxypropyl acrylate, 2-	00999-61-1
indene	00095-13-6
indium & compounds, as In	07440-74-6
isophorone	00078-59-1
isophorone diisocyanate	04098-71-9
isopropoxyethanol, 2-	00109-59-1
isopropylamine	00075-31-0
isopropylaniline, N-	00768-52-5
ketene	00463-51-4
lead & inorganic compounds, as Pb	07439-92-1
lindane (all isomers)	00058-89-9
lithium hydride	07580-67-8
maleic anhydride	00108-31-6
manganese & inorganic compounds, as Mn	07439-96-5
malathion	00121-75-5
mercury; Alkyl compounds; Aryl compounds; elemental & inorganic forms, as Hg	07439-97-6
methanol	0067-56-1
methoxychlor	00072-43-5
methyl aniline, N-	00100-61-8
methyl bromide	00074-83-9
methyl chloride	00074-87-3
methyl chloroform	00071-55-6

methyl hydrazine	00060-34-4
methyl iodide (iodomethane)	00074-88-4
methyl isobutyl ketone (MIBK)	00108-10-1
methyl isocyanate	00624-83-9
methyl isopropyl ketone	00563-80-4
methyl mercaptan	00074-93-1
methyl methacrylate	00080-62-6
methyl styrene, alpha-	00098-83-9
methyl tert-butyl ether (MTBE)	01634-04-4
methyl vinyl ketone	00078-94-4
methylamine	00074-89-5
methylene bis(2-chloroaniline), 4,4- (MBOCA; MOCA)	00101-14-4
methylene dianiline, 4,4-	00101-77-9
methylene diphenyl diisocyanate (monomeric MDI)	00101-68-8
mineral fibers, fine	*
Mirex	02385-85-5
molybdenum, as Mo; soluble compounds, metals and insouble compounds	07439-98-7
naphthalene	00091-20-3
naphthylamine, 2- or B-	00091-59-8
nickel carbonyl	13463-39-3
nickel, as Ni; elemental; soluble inorganic compounds; insoluble inorganic compounds (NOS); nickel subsulfide, as Ni	07440-02-0
nitric acid	07697-37-2
nitroaniline, para-	00100-01-6
nitrobenzene	00098-95-3
nitrodiphenyl, 4-	00092-93-3
nitrophenol, 4-	00100-02-7
nitropropane, 2-	00079-46-9
nitrosodimethylamine, n-	00062-75-9
nitrosomorpholine, n-	00059-89-2
nitroso-n-methylurea, n-	00684-93-5
octachlorostyrene	29082-74-4
osmium tetroxide	20816-12-0
parathion	00056-38-2
pentaborane	19624-22-7
pentachloronapthalene	01321-64-8
pentachloronitrobenzene	00082-68-8
pentachlorophenol	00087-86-5

pentyl acetate, all isomers	00620-11-1
perchloromethyl mercaptan	00594-42-3
perchloryl fluoride	07616-94-6
phenol	00108-95-2
phenylenediamine, para-	00106-50-3
phenylhydrazine	00100-63-0
phenylphosphine	00638-21-1
phosgene	00075-44-5
phosphine	07803-51-2
phosphoric acid	07664-38-2
phosphorus	07723-14-0
phosphorus oxychloride	10025-87-3
phosphorus trichloride	07719-12-2
phosphorus pentachloride	10026-13-8
phosphorus pentasulfide	01314-80-3
phthalic anhydride	00085-44-9
platinum metal and soluble salts, as Pt	07440-06-4
polychlorinated biphenyls (PCBs, arcolors)	01336-36-3
polychlorinated dibenzofurans (furans)	00132-64-9
polycyclic organic matter (POM)	*
polymeric methylene diphenyl diisocyanate (PMDI)	09016-87-9
propane sultone, 1,3-	01120-71-4
propionlactone, beta-	00057-57-8
propionaldhyde	00123-38-6
propoxur	00114-26-1
propylene dichloride	00078-87-5
propylene glycol dinitrate	06423-43-4
propylene oxide	00075-56-9
propylenimine (methyl aziridine, 2-)	00075-55-8
quinoline	00091-22-5
quinone	00106-51-4
radionuclides	*
selenium & compounds, as Se	7782-49-2
selenium hexafluoride	07783-79-1
silver metal and soluble compounds, as Ag	07440-22-4
sodium hydroxide	01310-73-2
stoddard solvent	08052-41-3
styrene oxide	00096-09-3
styrene, monomer	00100-42-5
subsilisins	09014-01-1
sulfur tetrafluoride	07783-60-0

sulfuric acid	07664-93-9
tellurium hexafluoride	07783-80-4
tetrachlorodibenzo-p-dioxin, 2,3,7,8-	01746-01-6
tetrachloroethane, 1,1,2,2-	00079-34-5
tetrachloroethylene (perchloroethylene)	00127-18-4
tetrafluoroethylene	00116-14-3
tetramethyl succinonitrile	03333-52-6
tetranitromethane	00509-14-8
tin metal, oxide & inorganic compounds, as Sn; Organic compounds	07440-31-5
titanium tetrachloride	07550-45-0
toluene	00108-88-3
toluene-2,4-diamine	00095-80-7
toluene-2,4-diisocyanate or 2,6-diisocyanate (or as a mixture)	00584-84-9; 00091-08-7
toluidine, o-	00095-53-4
toxaphene	08001-35-2
trichlorobenzene, 1,2,4-	00120-82-1
trichloroethane, 1,1,2-	00079-00-5
trichloroethylene	00079-01-6
trichlorophenol, 2,4,5-	00095-95-4
trichlorophenol, 2,4,6-	00088-06-2
trichloropropane, 1,2,3-	00096-18-4
triethylamine	00121-44-8
trifluralin	01582-09-8
trimellitic anhydride	00552-30-7
trimethylpentane, 2,2,4- (isooctane)	00540-84-1
trinitrotoluene, 2,4,6-	00118-96-7
triorthocresyl phosphate	00078-30-8
vanadium pentoxide, as V2O5 dust or fume	01314-62-1
vinyl acetate	00108-05-4
vinyl bromide	00593-60-2
vinyl chloride	00075-01-4
vinyl cyclohexene, 4-	00100-40-3
vinyl fluoride	00075-02-5
vinyl-1-cyclohexene dioxide, 4-	00106-87-6
vinylidene chloride	00075-35-4
xylenes	01330-20-7
xylenes, m-,	00108-38-3
xylenes, o-	00095-47-6
xylenes, p-	00106-42-3
zinc chloride fume	07646-85-7

zinc oxide	01314-13-2

* = No CAS number available

Effective: 02/12/2015

Five Year Review (FYR) Dates: 11/28/2014 and 02/12/2020

CERTIFIED ELECTRONICALLY
Certification

02/02/2015
Date

Promulgated Under: 119.03
Statutory Authority: 3704.03(F)
Rule Amplifies: 3704.03(F)(3)(c), 3704.03(F)(4)
Prior Effective Dates: 12/1/06