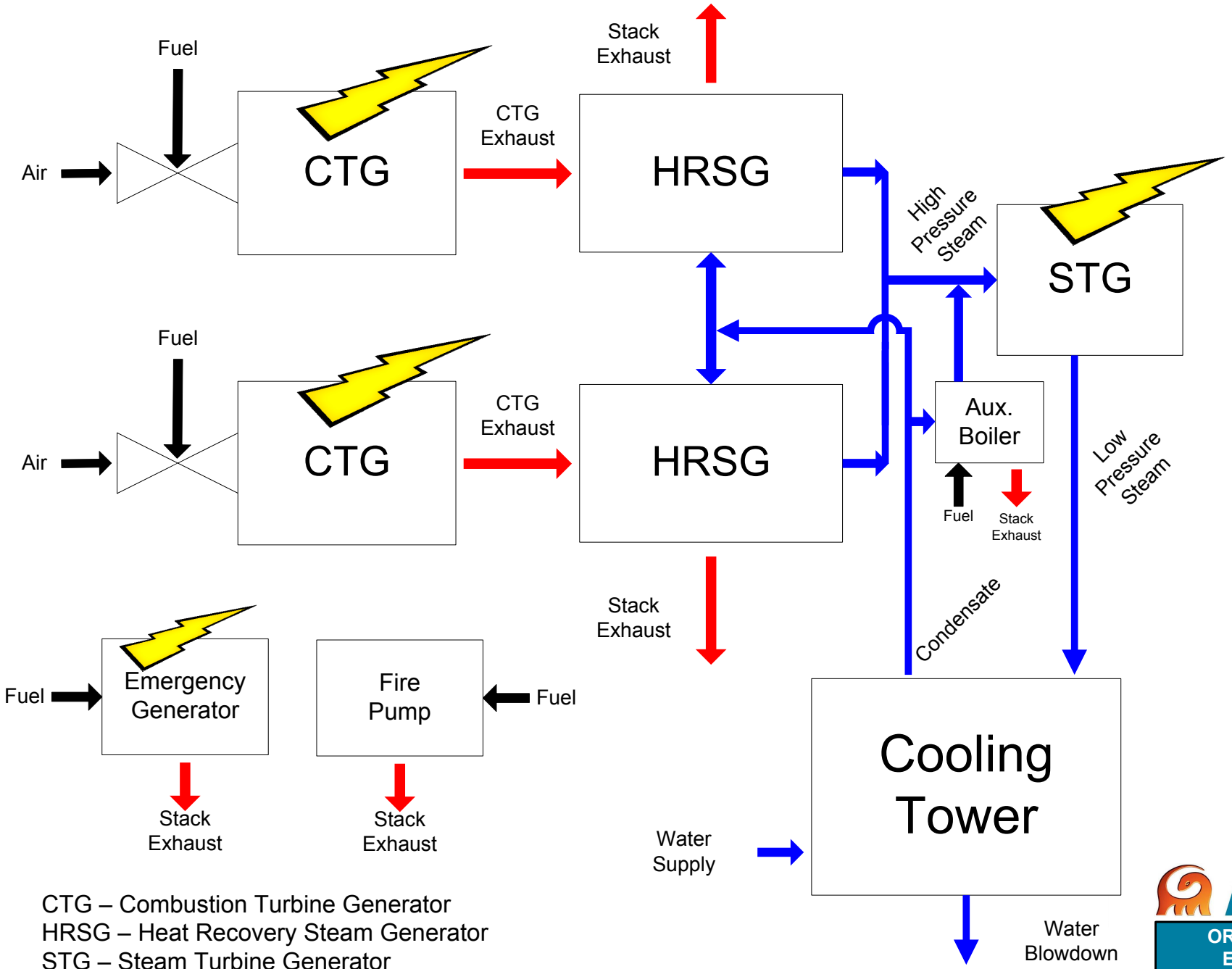

CTG – Combustion Turbine Generator
HRSG – Heat Recovery Steam Generator
STG – Steam Turbine Generator

ARCADIS

OREGON CLEAN ENERGY, LLC

PROCESS FLOW DIAGRAM

Lucas County, Ohio | Date: 08/17/2012

City: Chicago Author: MNesta Path: G:\Aproject\GIS\OCE\MXD\OCE_ProcessFlow.mxd